Model	VT2300/2500, Ges5330, Rex1260, NSA CP330	Volt/Hz	Date of Modification	Serial Number
Modified Article	Parts Catalog			
Reason for Modification	Parts catalog correction			

Correct your parts catalog as follows:
Page 9:
1. Description correction

NRG/Ricoh	Index	Part Number	Incorrect Description	Correct Description
NRG	5	C2122858	Decal - Replacing The Drum Unit - LG/A4	Decal - Replacing The Drum Unit - A4/TWN
NRG	18	C2122801	Front Cover - LT/B4	Front Cover - LT/TWN
NRG	24	C2122812	Front Door - A4 (GES)	Front Door - A4 (GES 5330)
NRG	24	C2122805	Front Door - LG (GES)	Front Door - LG (GES 5330)
NRG	24	C2122888	Front Door - B4 (REX)	Front Door - TWN (REX 1260)
NRG	24	C2122814	Front Door - B4 (GES)	Front Door - TWN (GES 5330)
NRG	24	C2122881	Front Door - LG (REX)	Front Door - LG (REX 1260)
NRG	24	C2122891	Front Door - LG (NSA)	Front Door - LG (NSA CP330)
NRG	24	C2122886	Front Door - A4 (REX)	Front Door - A4 (REX 1260)
NRG	24	C2122896	Front Door - A4 (NSA)	Front Door - A4 (NSA CP330)

T. Ito, Manager
Copier Technical Support

2. Part number correction

NRG/Ricoh	Index	Incorrect P/N	Correct P/N	Description
Ricoh	16	C2032425	C2032744	Paper Feed Cover
Ricoh	24	C2132411		Front Door
			C2132705	Front Door - LT
			C2132711	Front Door - A4

Page 23:
1. Not listed

NRG/Ricoh	Index	Part Number	Description
NRG	2	C2122831	Lever Bracket - A4

Page 31:
1. Part number correction

NRG/Ricoh	Index	Incorrect P/N	Correct P/N	Description
Common	106	06240220E		Spring Pin - 4 x 20mm
			08044060	Spring Pin - 4 x 22mm

Page 37:

1. Description correction

NRG/Ricoh	Index	Part Number	Incorrect Description	Correct Description
NRG	21	C2122854	Paper Delivery Cover Sheet - LG	Paper Delivery Cover Sheet
NRG	24	C2122852	Paper Delivery Cover - LG	Paper Delivery Cover

2. Delete the following parts

NRG/Ricoh	Index	Part Number	Description
NRG	21	C2002621	Paper Delivery Cover Sheet - A4/B4
NRG	24	C2002620	Paper Delivery Cover - A4/B4

Page 43:

1. Not listed

NRG/Ricoh	Index	Part Number	Description
NRG	14	C2012543	Decal - Drum Caution - English

Page 49:

1. Description correctionC o r r T c 6 r 8 .

2 Tf -0.255o2 4D	8 - English			

DETAILS OF MODIFICATION

It was reported that on some machines in the field, the image position varies. Although this is a very rare case, at worst this happened after making about 200, 000 prints. On the problem machine, the one-way clutch inside the 2nd feed roller gear slips just when the 2nd feed rollers start feeding a sheet. (The paper feed start timing is delayed.) This makes the image position vary, i.e. move up or down in paper feed direction. After investigation, it was found that the grease inside the one-way clutch changes in quality and damage the inside surface of the clutch. The new 2nd feed roller gear contains a new type of grease that does not change in quality unlike the old one. To distinguish the new gear from the old one, a groove is made on the new gear.

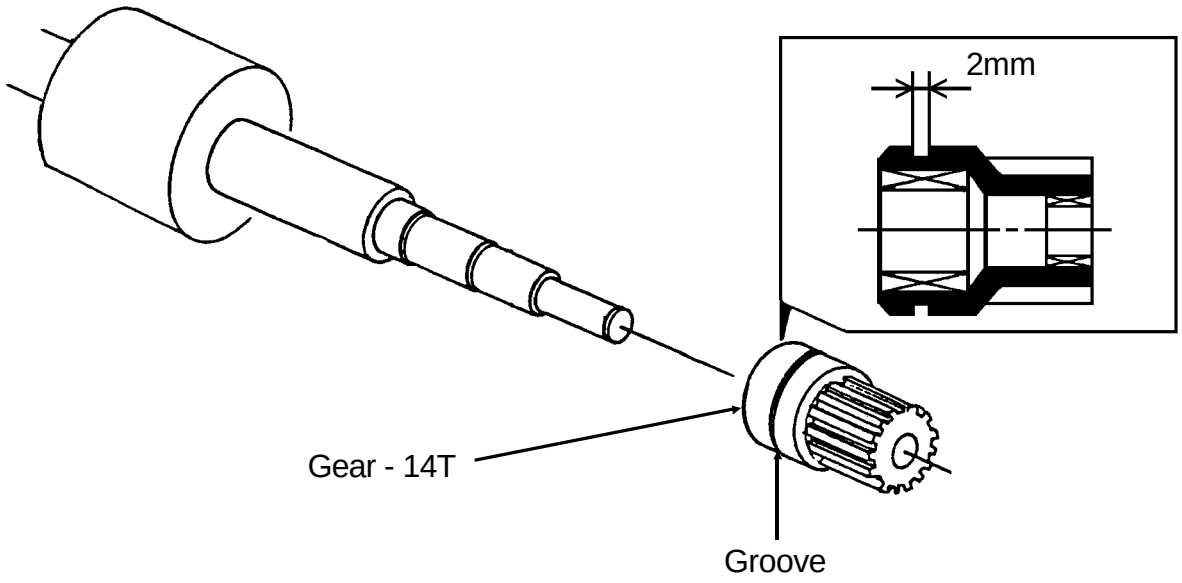

T. Ito, Manager
Copier Technical Support

MODEL NAME	V/Hz	DESTINATION	CODE	SERIAL NUMBER
Ges 5330	120/60	USA, Canada	C212-12	50521070001
Ges 5330	110/60	Taiwan	C212-13	From August ’91 Production
Rex 1260	110/60	Taiwan	C212-14	From August ’91 Production
Rex 1260	120/60	USA, Canada	C212-15	From August ’91 Production
NSA CP330	120/60	USA, Canada	C212-16	From August ’91 Production
Ricoh VT2300	120/60	USA, Canada	C212-17	From August ’91 Production
Ricoh VT2300	110/60	Taiwan	C212-19	From August ’91 Production
Ges 5330	220, 240/50	Europe, Asia	C212-22	50511070001
Rex 1260	220, 240/50	Europe, Asia	C212-24	From August ’91 Production
NSA CP330	220, 240/50	Europe, Asia	C212-25	From August ’91 Production
Ricoh VT2300	220, 240/50	Europe	C212-27	From August ’91 Production
Ricoh VT2300	220, 240/50	Asia	C212-29	C2811070001
Ricoh VT2500	120/60	USA, Canada	C213-17	From August ’91 Production
Ricoh VT2500	110/60	Taiwan	C213-19	From August ’91 Production
Ricoh VT2500	220, 240/50	Europe	C213-27	C2821070001
Ricoh VT2500	220, 240/50	Asia	C213-29	C2821070024

Model	VT2300/2500, Ges5330, Rex1260, NSA CP330	Volt/Hz	Date of Modification	Serial Number
Modified Article	Image Processing ROM			
Reason for Modification	To increase the image density of thin lines in the line mode			

Draw No.	Old Parts No.		New Parts No.	Description	A.B.C. Rank	Q’ty Used Old → New	Inter-change-ability	Part needed for replacement by new part: Part No.	Part needed for replacement by new part: Description	Parts Catalog: Index No.	Parts Catalog: Page
	C2078016		C2138025	IC - HN27128AP - 20		1 → 1	X/O			28 5	65 71

Rank: A : Replace with new parts immediately. B : Replace with new parts at time of repair. C : Replace with new parts at time of overhaul.
Interchangeability:
(1) When old and new parts are not mutually interchangeable, use additional parts or an assembly part as indicated in "Parts needed for replacement by new part" to install the new part.
(2) The mark to the left of the slash indicates whether the old part can be used in the new machine, and the mark to the right indicates whether the new part can be used in the old machine. x = Not interchangeable o = Interchangeable

DETAILS OF MODIFICATION

The reason of this modification is:

In the line mode, the sharpen image processing is on (this image process is common to the SS935/955 [Ges5230/5270, Rex1160/1170] series), and so, the lines are made finer and the images occasionally look lighter and inconsistent. This process is suitable for the SS935/955 [Ges5230/5270, Rex1160/1170] series because of its ink filtration process, but unsuitable for the VT2300/2500’s [Ges5330, Rex1260, NSA CP330] fine thermal head.
Therefore, we modified the sequential ROM used on the image processing board. This does not activate sharpen line processing in the line mode. As for the photo mode, we leave this process on to avoid a black dot effect on a photo image.

T. Ito, Manager
Copier Technical Support

MODEL NAME	V/Hz	DESTINATION	CODE	SERIAL NUMBER
Ges 5330	120/60	USA, Canada	C212-12	50521050001
Ges 5330	110/60	Taiwan	C212-13	50531050001
Rex 1260	110/60	Taiwan	C212-14	From June Production
Rex 1260	120/60	USA, Canada	C212-15	From June Production
NSA CP330	120/60	USA, Canada	C212-16	From June Production
Ricoh VT2300	120/60	USA, Canada	C212-17	From June Production
Ricoh VT2300	110/60	Taiwan	C212-19	From June Production
Ges 5330	220, 240/50	Europe, Asia	C212-22	50511050016
Rex 1260	220, 240/50	Europe, Asia	C212-24	From June Production
NSA CP330	220, 240/50	Europe, Asia	C212-25	50511050001
Ricoh VT2300	220, 240/50	Europe	C212-27	From June Production
Ricoh VT2300	220, 240/50	Asia	C212-29	C2811050001
Ricoh VT2500	120/60	USA, Canada	C213-17	From June Production
Ricoh VT2500	110/60	Taiwan	C213-19	From June Production
Ricoh VT2500	220, 240/50	Europe	C213-27	From June Production
Ricoh VT2500	220, 240/50	Asia	C213-29	C2821050001

Model	VT2300/2500, Ges5330, Rex1260, NSA CP330	Volt/Hz	Date of Modification	Serial Number
Modified Article	Feed Roller Arm			
Reason for Modification	To prevent the feed roller arm from touching the paper feed side plate			

Draw No.	Old Parts No.		New Parts No.	Description	A.B.C. Rank	Q’ty Used Old → New	Inter-change-ability	Part needed for replacement by new part: Part No.	Part needed for replacement by new part: Description	Parts Catalog: Index No.	Parts Catalog: Page
	C2035058		C2095035	Feed Roller Arm			X/O			3	21

Rank: A : Replace with new parts immediately. B : Replace with new parts at time of repair. C : Replace with new parts at time of overhaul.

Interchangeability:

(1) When old and new parts are not mutually interchangeable, use additional parts or an assembly part as indicated in "Parts needed for replacement by new part" to install the new part.

(2) The mark to the left of the slash indicates whether the old part can be used in the new machine, and the mark to the right indicates whether the new part can be used

DETAILS OF MODIFICATION

When the paper table is lowered, the feed roller arm contacts the side pad lever if the paper feed s ide plates are fully opened. To prevent this, the shape of the feed roller arm has been changed as shown in the illustration below.

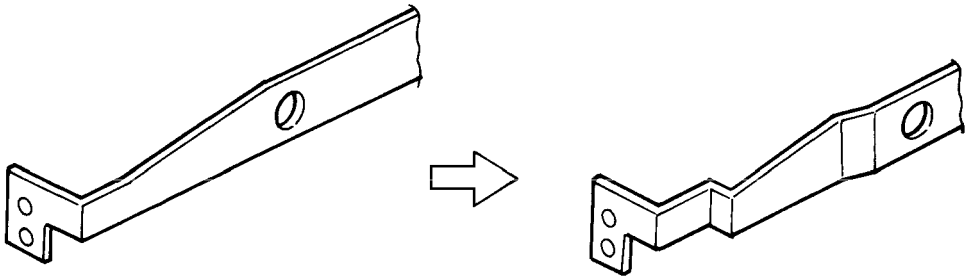

T. Ito, Manager
Copier Technical Support

MODEL NAME	V/Hz	DESTINATION	CODE	SERIAL NUMBER
Ges 5330	120/60	USA, Canada	C212-12	From August ’91 Production
Ges 5330	110/60	Taiwan	C212-13	From August ’91 Production
Rex 1260	110/60	Taiwan	C212-14	From August ’91 Production
Rex 1260	120/60	USA, Canada	C212-15	From August ’91 Production
NSA CP330	120/60	USA, Canada	C212-16	From August ’91 Production
Ricoh VT2300	120/60	USA, Canada	C212-17	From August ’91 Production
Ricoh VT2300	110/60	Taiwan	C212-19	From August ’91 Production
Ges 5330	220, 240/50	Europe, Asia	C212-22	50511070001
Rex 1260	220, 240/50	Europe, Asia	C212-24	From August ’91 Production
NSA CP330	220, 240/50	Europe, Asia	C212-25	From August ’91 Production
Ricoh VT2300	220, 240/50	Europe	C212-27	From August ’91 Production
Ricoh VT2300	220, 240/50	Asia	C212-29	C2811070001
Ricoh VT2500	120/60	USA, Canada	C213-17	From August ’91 Production
Ricoh VT2500	110/60	Taiwan	C213-19	From August ’91 Production
Ricoh VT2500	220, 240/50	Europe	C213-27	From August ’91 Production
Ricoh VT2500	220, 240/50	Asia	C213-29	From August ’91 Production

Model	VT2300/2500, Ges5330, Rex1260, NSA CP330	Volt/Hz	Date of Modification	Serial Number
Modified Article	Paper detecting arm			
Reason for Modification	To improve strength and durability of the paper detecting arm			

Draw No.	Old Parts No.		New Parts No.	Description	A.B.C. Rank	Q’ty Used Old → New	Inter-change-ability	Part needed for replacement by new part: Part No.	Part needed for replacement by new part: Description	Parts Catalog: Index No.	Parts Catalog: Page
	C2035515		C2095515	Paper Detecting Arm			X/X	X/O as a set		13	27
	08046090			Hexagon Bolt - M4						105	27
	07130040B			Hexagon Nut - M4						106	27
			05730050E	Hexagon Headless Set Screw - M3 x 5			X/X			* 113	27

Rank: A : Replace with new parts immediately. B : Replace with new parts at time of repair. C : Replace with new parts at time of overhaul.

Interchangeability:

(1) When old and new parts are not mutually interchangeable, use additional parts or an assembly part as indicated in "Parts needed for replacement by new part" to install the new part.

(2) The mark to the left of the slash indicates whether the old part can be used in the new machine, and the mark to the right indicates whether the new part can be used

DETAILS OF MODIFICATION

To improve strength and durability, the paper detecting arm has been changed to the type used on the NA2 (C210).

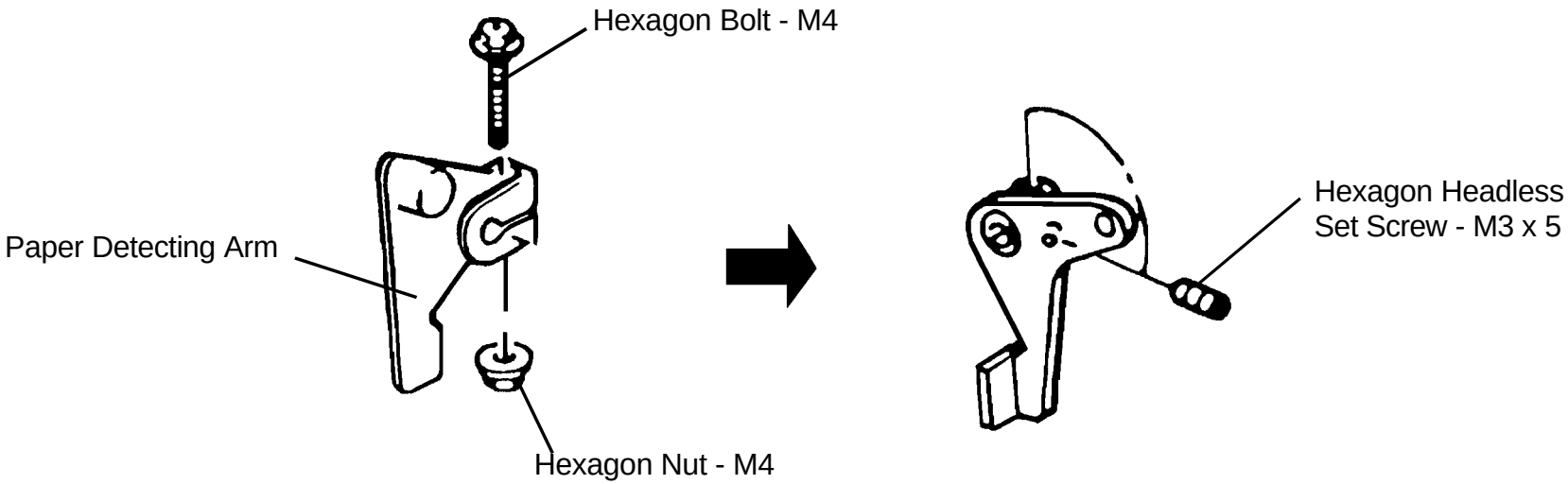

T. Ito, Manager
Copier Technical Support

MODEL NAME	V/Hz	DESTINATION	CODE	SERIAL NUMBER
Ges 5330	120/60	USA, Canada	C212-12	50521070001
Ges 5330	110/60	Taiwan	C212-13	From August ’91 Production
Rex 1260	110/60	Taiwan	C212-14	From August ’91 Production
Rex 1260	120/60	USA, Canada	C212-15	From August ’91 Production
NSA CP330	120/60	USA, Canada	C212-16	From August ’91 Production
Ricoh VT2300	120/60	USA, Canada	C212-17	From August ’91 Production
Ricoh VT2300	110/60	Taiwan	C212-19	From August ’91 Production
Ges 5330	220, 240/50	Europe, Asia	C212-22	50511070001
Rex 1260	220, 240/50	Europe, Asia	C212-24	From August ’91 Production
NSA CP330	220, 240/50	Europe, Asia	C212-25	From August ’91 Production
Ricoh VT2300	220, 240/50	Europe	C212-27	From August ’91 Production
Ricoh VT2300	220, 240/50	Asia	C212-29	C2811070001
Ricoh VT2500	120/60	USA, Canada	C213-17	From August ’91 Production
Ricoh VT2500	110/60	Taiwan	C213-19	From August ’91 Production
Ricoh VT2500	220, 240/50	Europe	C213-27	C2821070001
Ricoh VT2500	220, 240/50	Asia	C213-29	C2821070024

Model	VT2300/2500, Ges5330, Rex1260, NSA CP330	Volt/Hz	Date of Modification	Serial Number
Modified Article	Left Guide Plate			
Reason for Modification	To match the appearance of the Delivery Guide Plates			

Draw No.	Old Parts No.		New Parts No.	Description	A.B.C. Rank	Q’ty Used Old → New	Inter-change-ability	Part needed for replacement by new part: Part No.	Part needed for replacement by new part: Description	Parts Catalog: Index No.	Parts Catalog: Page
	C2076118		C2136118	Left Guide Plate		1 → 1	O/O			2	37

Rank: A : Replace with new parts immediately. B : Replace with new parts at time of repair. C : Replace with new parts at time of overhaul.

Interchangeability:

(1) When old and new parts are not mutually interchangeable, use additional parts or an assembly part as indicated in "Parts needed for replacement by new part" to install the new part.

(2) The mark to the left of the slash indicates whether the old part can be used in the new machine, and the mark to the right indicates whether the new part can be used

DETAILS OF MODIFICATION

The right guide plate of the priport VT2000 series was chagned from that of the priport SS series in order to allow for the installation of the tape dispenser unit. As a result, the appearance of the right guide plate was different from th e old one. This was visible especally when the right and left guide plates were closed. (See figure)

Now the left guide plate has been changed to watch its appearance with that of the right guide plate . The differnce between the new and old one is only in the appearance of the backside (Interchageability is O/O).

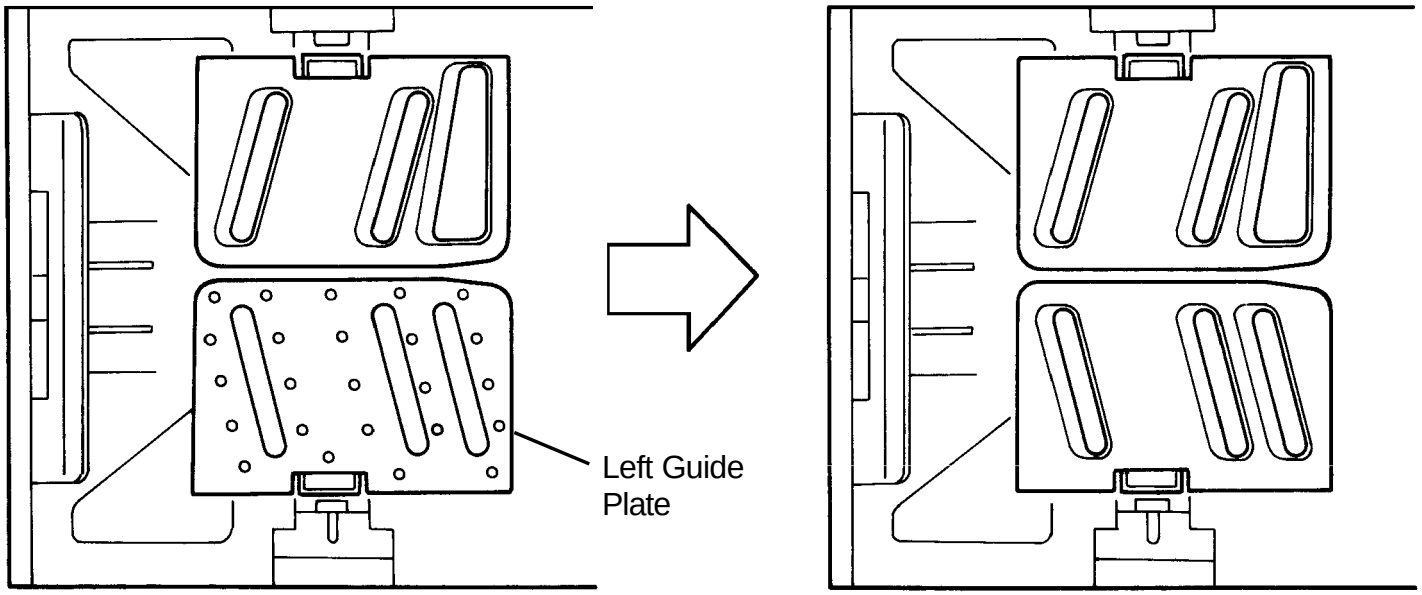

T. Ito, Manager
Copier Technical Support

MODEL NAME	V/Hz	DESTINATION	CODE	SERIAL NUMBER
Ges 5330	120/60	USA, Canada	C212-12	
Ges 5330	110/60	Taiwan	C212-13	
Rex 1260	110/60	Taiwan	C212-14	
Rex 1260	120/60	USA, Canada	C212-15	
NSA CP330	120/60	USA, Canada	C212-16	
Ricoh VT2300	120/60	USA, Canada	C212-17	
Ricoh VT2300	110/60	Taiwan	C212-19	
Ges 5330	220, 240/50	Europe, Asia	C212-22	
Rex 1260	220, 240/50	Europe, Asia	C212-24	
NSA CP330	220, 240/50	Europe, Asia	C212-25	
Ricoh VT2300	220, 240/50	Europe	C212-27	
Ricoh VT2300	220, 240/50	Asia	C212-29	
Ricoh VT2500	120/60	USA, Canada	C213-17	
Ricoh VT2500	110/60	Taiwan	C213-19	
Ricoh VT2500	220, 240/50	Europe	C213-27	
Ricoh VT2500	220, 240/50	Asia	C213-29	

Model	VT2300/2500, Ges 5330, Rex 1260, NSA CP330	Volt/Hz	Date of Modification	Serial Number
Modified Article	Power Supply Unit			
Reason for Modification	To improve the response of the power supply circuit			

Draw No.	Old Parts No.		New Parts No.	Description	A.B.C. Rank	Q’ty Used Old → New	Inter-change-ability	Part needed for replacement by new part: Part No.	Part needed for replacement by new part: Description	Parts Catalog: Index No.	Parts Catalog: Page
	16061492			Capacitor - 1μF± 30 - 80% 50V						130	77
		→	16060807	Capacitor - 0.1μF 50V			X/O				

Rank: A : Replace with new parts immediately. B : Replace with new parts at time of repair. C : Replace with new parts at time of overhall.

Interchangeability:

(1) When old and new parts are not mutually interchangeable, use additional parts or an assembly part as indicated in "Parts needed for replacement by new part" to install the new part.

(2) The mark to the left of the slash indicates whether the old part can be used in the new machine, and the mark to the right indicates whether the new part can be used in the old machine. x = Not interchangeable o = Interchangeable

DETAILS OF MODIFICATION

At the factory, it was found that the machine sometimes fails to start working if an operator repeat edly turns the main switch on and off very quickly. In this case, dc 5V is not supplied.

A capacitor used in the power supply unit has been changed so that power supply circuit responds qui ckly.

Part number of the power supply unit has not been changed but suffix has been changed to A.

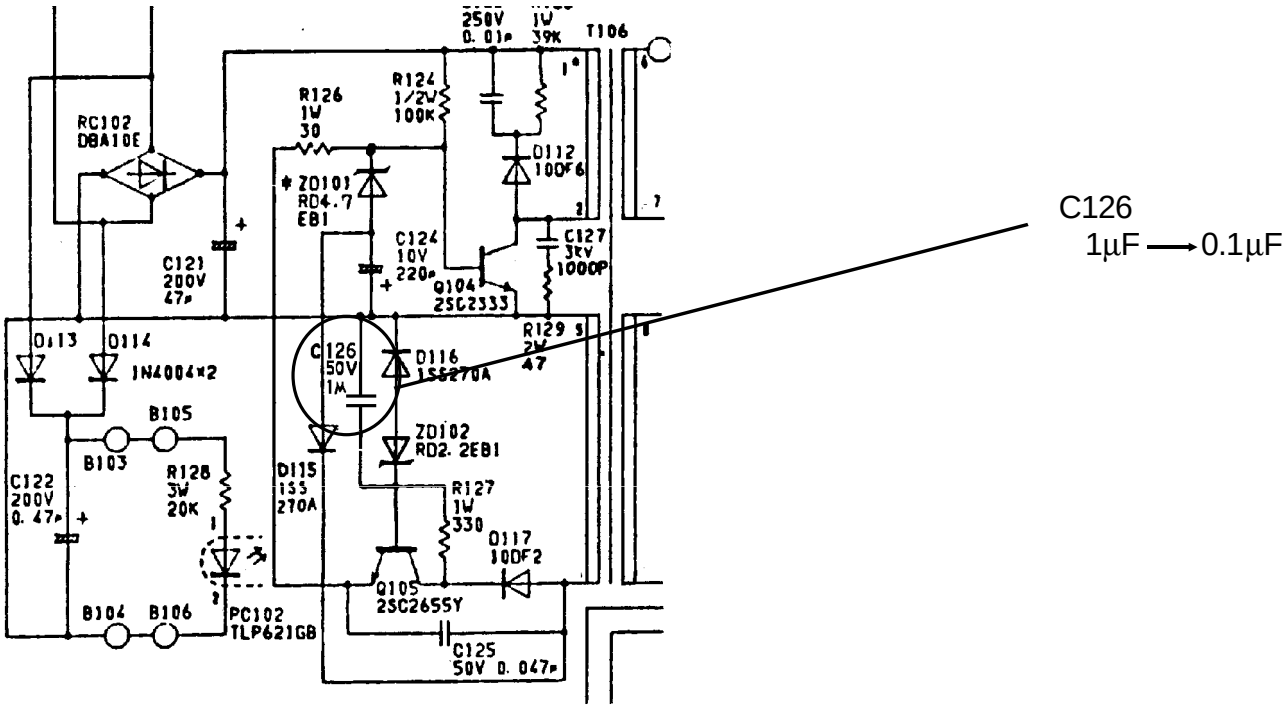

Power Supply Unit C2138302 → C2138302A

T. Ito, Manager
Copier Technical Support

MODEL NAME	V/Hz	DESTINATION	CODE	SERIAL NUMBER
Ges 5330	120/60	USA, Canada	C212-12	50521070001
Ges 5330	110/60	Taiwan	C212-13	From August ’91 Production
Rex 1260	110/60	Taiwan	C212-14	From August ’91 Production
Rex 1260	120/60	USA, Canada	C212-15	From August ’91 Production
NSA CP330	120/60	USA, Canada	C212-16	From August ’91 Production
Ricoh VT2300	120/60	USA, Canada	C212-17	From August ’91 Production
Ricoh VT2300	110/60	Taiwan	C212-19	From August ’91 Production
Ges 5330	220, 240/50	Europe, Asia	C212-22	50511070001
Rex 1260	220, 240/50	Europe, Asia	C212-24	From August ’91 Production
NSA CP330	220, 240/50	Europe, Asia	C212-25	From August ’91 Production
Ricoh VT2300	220, 240/50	Europe	C212-27	From August ’91 Production
Ricoh VT2300	220, 240/50	Asia	C212-29	C2811070001
Ricoh VT2500	120/60	USA, Canada	C213-17	From August ’91 Production
Ricoh VT2500	110/60	Taiwan	C213-19	From August ’91 Production
Ricoh VT2500	220, 240/50	Europe	C213-27	C2821070001
Ricoh VT2500	220, 240/50	Asia	C213-29	C2821070024

Model	VT2300/2500, Ges5330, Rex1260, NSA CP330	Volt/Hz	Date of Modification	Serial Number
Modified Article	Magnet Plate			
Reason for Modification	To increase attraction between the magnet catch and the magnet plate			

Draw No.	Old Parts No.		New Parts No.	Description	A.B.C. Rank	Q’ty Used Old → New	Inter-change-ability	Part needed for replacement by new part: Part No.	Part needed for replacement by new part: Description	Parts Catalog: Index No.	Parts Catalog: Page
	C2002432		C2132435	Magnet Plate			X/O			26	9

Rank: A : Replace with new parts immediately. B : Replace with new parts at time of repair. C : Replace with new parts at time of overhall.

Interchangeability:

(1) When old and new parts are not mutually interchangeable, use additional parts or an assembly part as indicated in "Parts needed for replacement by new part" to install the new part.

(2) The mark to the left of the slash indicates whether the old part can be used in the new machine, and the mark to the right indicates whether the new part can be used in the old machine. x = Not interchangeable o = Interchangeable

DETAILS OF MODIFICATION

In VT series, the flat head screws fixing the magnet plate project out of the holes of the magnet pl ate because the heads of the screws are a little bigger than the holes. This weakens the attraction between the magnet catch and the mag net plate (illustration A).

To increase the attraction, the holes of the magnet plate have been made bigger so that the magnet s ticks the magnet plate tightly (illustration B).

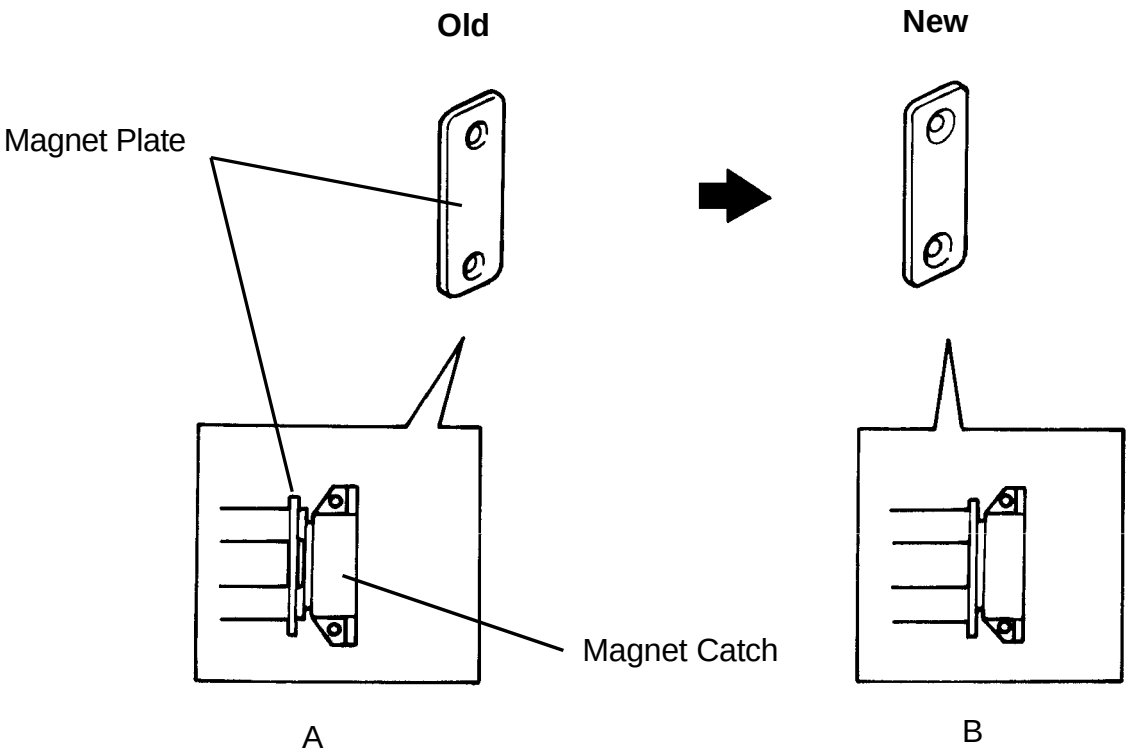

T. Ito, Manager
Copier Technical Support

MODEL NAME	V/Hz	DESTINATION	CODE	SERIAL NUMBER
Ges 5330	120/60	USA, Canada	C212-12	50521080003
Ges 5330	110/60	Taiwan	C212-13	From September ’91 Production
Rex 1260	110/60	Taiwan	C212-14	From September ’91 Production
Rex 1260	120/60	USA, Canada	C212-15	50521080098
NSA CP330	120/60	USA, Canada	C212-16	From September ’91 Production
Ricoh VT2300	120/60	USA, Canada	C212-17	From September ’91 Production
Ricoh VT2300	110/60	Taiwan	C212-19	From September ’91 Production
Ges 5330	220, 240/50	Europe, Asia	C212-22	50511080007
Rex 1260	220, 240/50	Europe, Asia	C212-24	From September ’91 Production
NSA CP330	220, 240/50	Europe, Asia	C212-25	50511080103
Ricoh VT2300	220, 240/50	Europe	C212-27	C2811080003
Ricoh VT2300	220, 240/50	Asia	C212-29	From September ’91 Production
Ricoh VT2500	120/60	USA, Canada	C213-17	From September ’91 Production
Ricoh VT2500	110/60	Taiwan	C213-19	From September ’91 Production
Ricoh VT2500	220, 240/50	Europe	C213-27	C2821080005
Ricoh VT2500	220, 240/50	Asia	C213-29	C2821080024

Model	VT2300/2500, Ges5330, rex1260, NSA CP330	Volt/Hz	Date of Modification	Serial Number
Modified Article	Antistatic Brush			
Reason for Modification	To prevent paper jamming around the drum			

Draw No.	Old Parts No.		New Parts No.	Description	A.B.C. Rank	Q’ty Used Old → New	Inter-change-ability	Part needed for replacement by new part: Part No.	Part needed for replacement by new part: Description	Parts Catalog: Index No.	Parts Catalog: Page
			C2135500	Antistatic Brush		0 → 1				*28	27
									* New Index		

Rank: A : Replace with new parts immediately. B : Replace with new parts at time of repair. C : Replace with new parts at time of overhall.
Interchangeability:
(1) When old and new parts are not mutually interchangeable, use additional parts or an assembly part as indicated in "Parts needed for replacement by new part" to install the new part.
(2) The mark to the left of the slash indicates whether the old part can be used in the new machine, and the mark to the right indicates whether the new part can be used in the old machine. x = Not interchangeable o = Interchangeable

DETAILS OF MODIFICATION

To prevent paper jamming under low humidity conditions caused by static electricity on the paper, an antistatic brush is added on the upper second feed roller guide plate. Refer to RTB No. 3 for details.

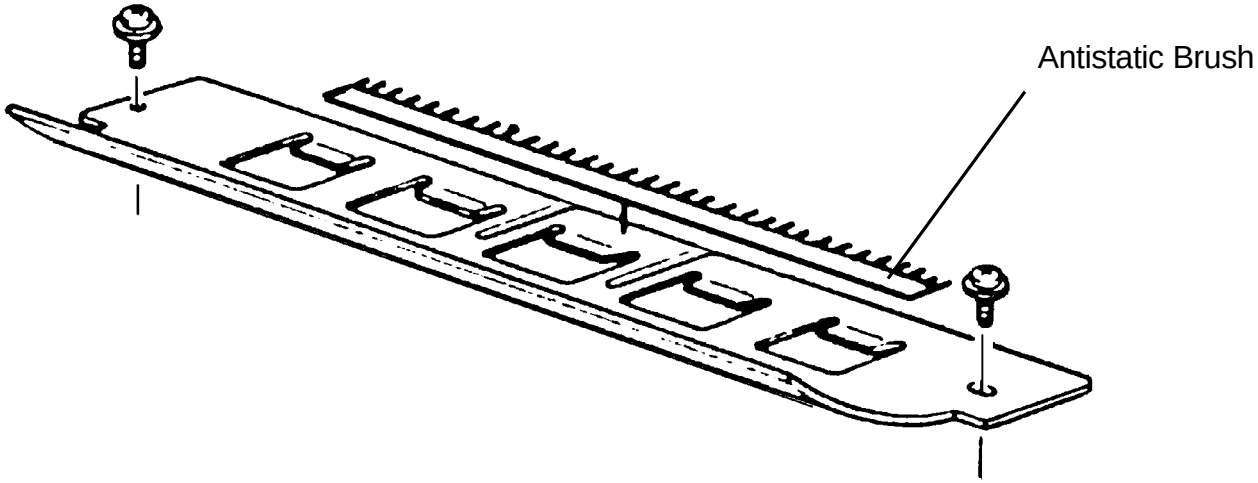

T. Ito, Manager
Copier Technical Support

MODEL NAME	V/Hz	DESTINATION	CODE	SERIAL NUMBER
Ges 5330	120/60	USA, Canada	C212-12	50521070001
Ges 5330	110/60	Taiwan	C212-13	From September ’91 Production
Rex 1260	110/60	Taiwan	C212-14	From September ’91 Production
Rex 1260	120/60	USA, Canada	C212-15	50521080097
NSA CP330	120/60	USA, Canada	C212-16	From September ’91 Production
Ricoh VT2300	120/60	USA, Canada	C212-17	From September ’91 Production
Ricoh VT2300	110/60	Taiwan	C212-19	From September ’91 Production
Ges 5330	220, 240/50	Europe, Asia	C212-22	50511070001
Rex 1260	220, 240/50	Europe, Asia	C212-24	From September ’91 Production
NSA CP330	220, 240/50	Europe, Asia	C212-25	50511080099
Ricoh VT2300	220, 240/50	Europe	C212-27	C2811080001
Ricoh VT2300	220, 240/50	Asia	C212-29	C2811070001
Ricoh VT2500	120/60	USA, Canada	C213-17	From September ’91 Production
Ricoh VT2500	110/60	Taiwan	C213-19	From September ’91 Production
Ricoh VT2500	220, 240/50	Europe	C213-27	C2821070001
Ricoh VT2500	220, 240/50	Asia	C213-29	C2821070024

Model	VT2300/2500, Ges 5330, Rex 1260, NSA CP330	Volt/Hz	Date of Modification	Serial Number
Modified Article	Power Supply Unit			
Reason for Modification	Additional information for MB NO.7			

Draw No.	Old Parts No.		New Parts No.	Description	A.B.C. Rank	Q'ty Used Old → New	Inter-change-ability	Part needed for replacement by new part: Part No.	Part needed for replacement by new part: Description	Parts Catalog: Index No.	Parts Catalog: Page
			C2138339	Ferrite Core - B-20F-38						*254	72
									* New Index		

Rank: A : Replace with new parts immediately. B : Replace with new parts at time of repair. C : Replace with new parts at time of overhall.

Interchangeability:

(1) When old and new parts are not mutually interchangeable, use additional parts or an assembly part as indicated in "Parts needed for replacement by new part" to install the new part.

(2) The mark to the left of the slash indicates whether the old part can be used in the new machine, and the mark to the right indicates whether the new part can be used in the old machine. x = Not interchangeable o = Interchangeable

DETAILS OF MODIFICATION

To ensure that the power supply circuit responds quickly (Refer to the MB No. 7), a ferrite core is added to the anode of the diode D115.

Part number of the power supply unit has not been changed but suffix has been changed to B.

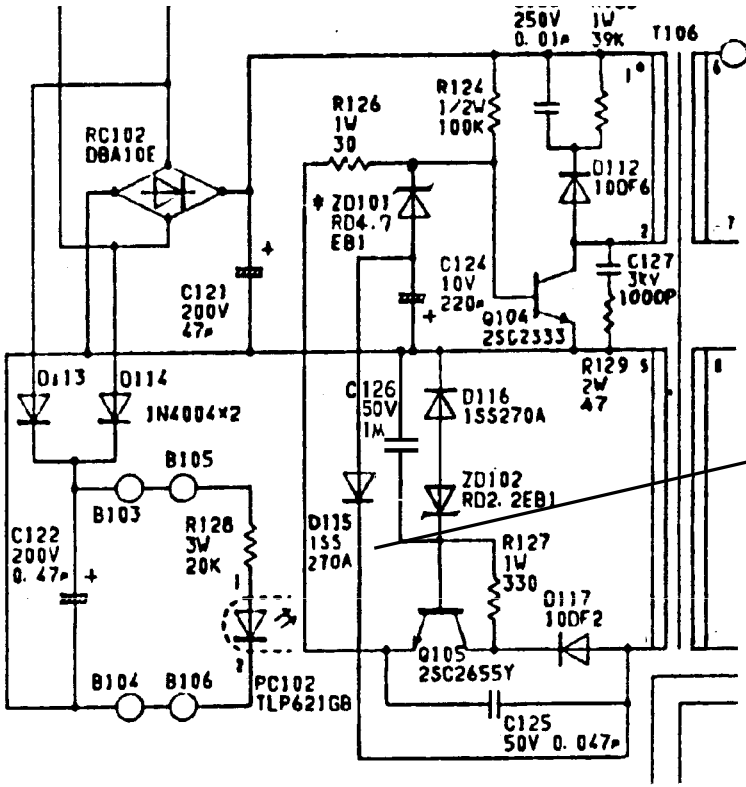

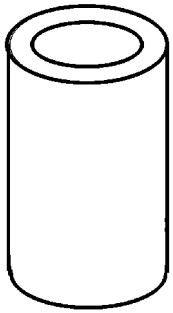

Ferrite Core - B-20F-38

T. Ito, Manager
Copier Technical Support

MODEL NAME	V/Hz	DESTINATION	CODE	SERIAL NUMBER
Ges 5330	120/60	USA, Canada	C212-12	50521070001
Ges 5330	110/60	Taiwan	C212-13	From August ’91 Production
Rex 1260	110/60	Taiwan	C212-14	From August ’91 Production
Rex 1260	120/60	USA, Canada	C212-15	From August ’91 Production
NSA CP330	120/60	USA, Canada	C212-16	From August ’91 Production
Ricoh VT2300	120/60	USA, Canada	C212-17	From August ’91 Production
Ricoh VT2300	110/60	Taiwan	C212-19	From August ’91 Production
Ges 5330	220, 240/50	Europe, Asia	C212-22	50511070001
Rex 1260	220, 240/50	Europe, Asia	C212-24	From August ’91 Production
NSA CP330	220, 240/50	Europe, Asia	C212-25	From August ’91 Production
Ricoh VT2300	220, 240/50	Europe	C212-27	From August ’91 Production
Ricoh VT2300	220, 240/50	Asia	C212-29	C2811070001
Ricoh VT2500	120/60	USA, Canada	C213-17	From August ’91 Production
Ricoh VT2500	110/60	Taiwan	C213-19	From August ’91 Production
Ricoh VT2500	220, 240/50	Europe	C213-27	C2821070001
Ricoh VT2500	220, 240/50	Asia	C213-29	C2821070024

Model	VT2300/2500, Ges 5330, Rex 1260, NSA CP330	Volt/Hz	Date of Modification	Serial Number
Modified Article	Scanner Unit Lock Lever			
Reason for Modification	To facilitate servicing			

Draw No.	Old Parts No.		New Parts No.	Description	A.B.C. Rank	Q’ty Used Old → New	Inter-change-ability	Part needed for replacement by new part: Part No.	Part needed for replacement by new part: Description	Parts Catalog: Index No.	Parts Catalog: Page
	C2123122		C2123124	Grip Bracket - NRG			X/O			10	49
	C2033031		C2033030	Grip Bracket - Ricoh			X/O			10	49
	C2033032		C2133032	Lock Lever			X/X		X/O as a set	33	49
	C2033033		C2133033	Lock Lever - Transmission			X/X			25	49
	05530100E	→		Allen Screw - M3 x 10			X/O			116	49
			05530060E	Allen Screw - M3 x 6							

Rank: A : Replace with new parts immediately. B : Replace with new parts at time of repair. C : Replace with new parts at time of overhall.

Interchangeability:

(1) When old and new parts are not mutually interchangeable, use additional parts or an assembly part as indicated in "Parts needed for replacement by new part" to install the new part.

(2) The mark to the left of the slash indicates whether the old part can be used in the new machine, and the mark to the right indicates whether the new part can be used in the old machine. x = Not interchangeable o = Interchangeable

DETAILS OF MODIFICATION

In the present machines, it is difficult to tighten the screw fixing the lock lever to the shaft. It is necessary to remove the scanner unit to access the screw.

To facilitate servicing, the direction of the screw has been changed and the cutout of the bracket h as been enlarged so that a customer engineer can access the screw from the cutout of the bracket.

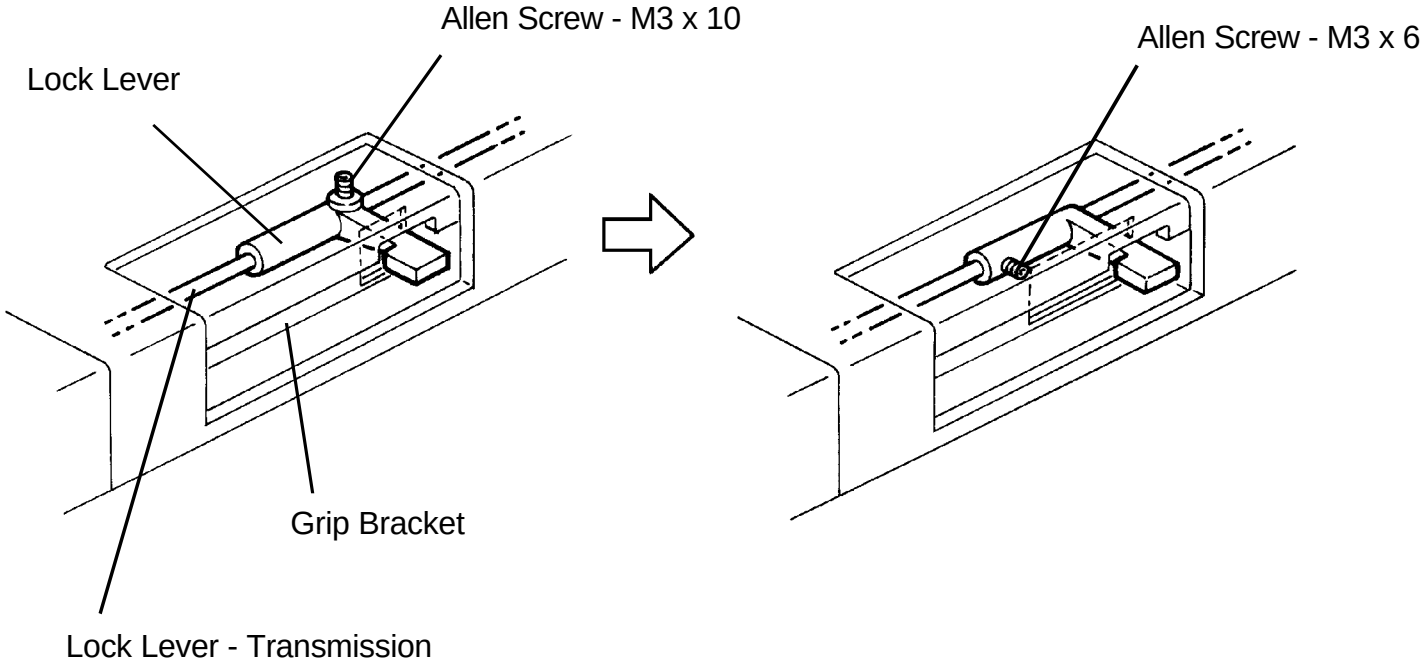

T. Ito, Manager
Copier Technical Support

MODEL NAME	V/Hz	DESTINATION	CODE	SERIAL NUMBER
Ges 5330	120/60	USA, Canada	C212-12	50521090001
Ges 5330	110/60	Taiwan	C212-13	50531090001
Rex 1260	110/60	Taiwan	C212-14	From August ’91 Production
Rex 1260	120/60	USA, Canada	C212-15	From August ’91 Production
NSA CP330	120/60	USA, Canada	C212-16	From August ’91 Production
Ricoh VT2300	120/60	USA, Canada	C212-17	From August ’91 Production
Ricoh VT2300	110/60	Taiwan	C212-19	From August ’91 Production
Ges 5330	220, 240/50	Europe, Asia	C212-22	50511090001
Rex 1260	220, 240/50	Europe, Asia	C212-24	From August ’91 Production
NSA CP330	220, 240/50	Europe, Asia	C212-25	50511090188
Ricoh VT2300	220, 240/50	Europe	C212-27	C2811090001
Ricoh VT2300	220, 240/50	Asia	C212-29	C2811090061
Ricoh VT2500	120/60	USA, Canada	C213-17	From August ’91 Production
Ricoh VT2500	110/60	Taiwan	C213-19	From August ’91 Production
Ricoh VT2500	220, 240/50	Europe	C213-27	C2821070001
Ricoh VT2500	220, 240/50	Asia	C213-29	C2821070024

Model	VT2300/2500, Ges 5330. Rex 1260, NSA CP330	Volt/Hz	Date of Modification	Serial Number
Modified Article	Pressure Spring Link			
Reason for Modification	To increase reliability of the pressure spring link			

Draw No.	Old Parts No.		New Parts No.	Description	A.B.C. Rank	Q’ty Used Old → New	Inter-change-ability	Part needed for replacement by new part: Part No.	Part needed for replacement by new part: Description	Parts Catalog: Index No.	Parts Catalog: Page
	C2005543		C2095543	Pressure Roller Spring Link		1 → 1	X/X		X/O as a set	21	31
			C2095521	Joint Shaft		0 → 1				* 28	31
			07200030Z	Retaining Ring - M3		0 → 2				* 29	31
									* New Index		

Rank: A : Replace with new parts immediately. B : Replace with new parts at time of repair. C : Replace with new parts at time of overhall.

Interchangeability:

(1) When old and new parts are not mutually interchangeable, use additional parts or an assembly part as indicated in "Parts needed for replacement by new part" to install the new part.

(2) The mark to the left of the slash indicates whether the old part can be used in the new machine, and the mark to the right indicates whether the new part can be used in the old machine. x = Not interchangeable o = Interchangeable

DETAILS OF MODIFICATION

To increase the reliability, the pressure spring link is modified as shown in the illustration 1. Du e to this modification, the adjustment value of the bolt clearance [A] has been changed as shown in the illustration 2.

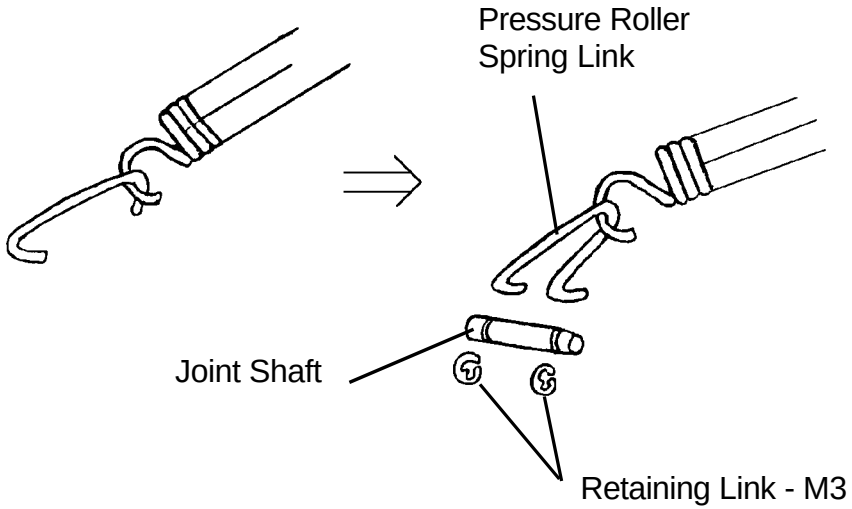

Illustration 1

Standard Setting:

11mm

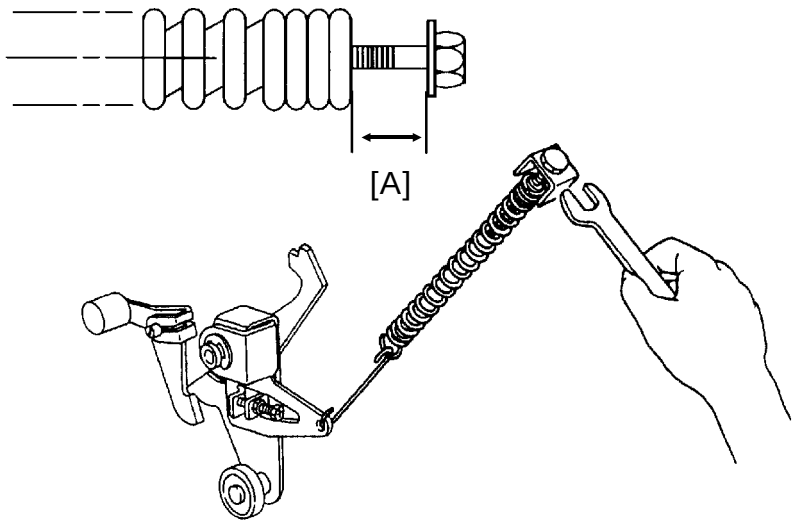

Illustration 2

T. Ito, Manager
Copier Technical Support

MODEL NAME	V/Hz	DESTINATION	CODE	SERIAL NUMBER
Ges 5330	120/60	USA, Canada	C212-12	From December ’91 Production
Ges 5330	110/60	Taiwan	C212-13	50531110001
Rex 1260	110/60	Taiwan	C212-14	From December ’91 Production
Rex 1260	120/60	USA, Canada	C212-15	From December ’91 Production
NSA CP330	120/60	USA, Canada	C212-16	From December ’91 Production
Ricoh VT2300	120/60	USA, Canada	C212-17	From December ’91 Production
Ricoh VT2300	110/60	Taiwan	C212-19	From December ’91 Production
Ges 5330	220, 240/50	Europe, Asia	C212-22	50511110001
Rex 1260	220, 240/50	Europe, Asia	C212-24	C2811110001
NSA CP330	220, 240/50	Europe, Asia	C212-25	From December ’91 Production
Ricoh VT2300	220, 240/50	Europe	C212-27	From December ’91 Production
Ricoh VT2300	220, 240/50	Asia	C212-29	From December ’91 Production
Ricoh VT2500	120/60	USA, Canada	C213-17	From December ’91 Production
Ricoh VT2500	110/60	Taiwan	C213-19	From December ’91 Production
Ricoh VT2500	220, 240/50	Europe	C213-27	C2821110001
Ricoh VT2500	220, 240/50	Asia	C213-29	C2821110009

Model	VT2300/2500, Ges 5330, Rex 1260, NSA CP330	Volt/Hz	Date of Modification	Serial Number
Modified Article	Ink Antechamber			
Reason for Modification	Vender change			

Due to vendor change, the ink antechamber has been changed. The interchangeability is O/O.

Old Part Number	New Part Number	Description	Page	Index
C2004810	C2134810	Ink Antechamber	39	20

T. Ito, Manager
Copier Technical Support

MODEL NAME	V/Hz	DESTINATION	CODE	SERIAL NUMBER
Ges 5330	120/60	USA, Canada	C212-12	50522020001
Ges 5330	110/60	Taiwan	C212-13	50532020001
Rex 1260	110/60	Taiwan	C212-14	From April ’92 Production
Rex 1260	120/60	USA, Canada	C212-15	From April ’92 Production
NSA CP330	120/60	USA, Canada	C212-16	From April ’92 Production
Ricoh VT2300	120/60	USA, Canada	C212-17	From April ’92 Production
Ricoh VT2300	110/60	Taiwan	C212-19	From April ’92 Production
Ges 5330	220, 240/50	Europe, Asia	C212-22	50512020001
Rex 1260	220, 240/50	Europe, Asia	C212-24	50512020036
NSA CP330	220, 240/50	Europe, Asia	C212-25	50512020046
Ricoh VT2300	220, 240/50	Europe	C212-27	From April ’92 Production
Ricoh VT2300	220, 240/50	Asia	C212-29	C2812020001
Ricoh VT2500	120/60	USA, Canada	C213-17	From April ’92 Production
Ricoh VT2500	110/60	Taiwan	C213-19	From April ’92 Production
Ricoh VT2500	220, 240/50	Europe	C213-27	C2822020001
Ricoh VT2500	220, 240/50	Asia	C213-29	C2822020003

Model	VT2300/2500, Ges5330, Rex1260, NSA CP330	Volt/Hz	Date of Modification	Serial Number
Modified Article	Parts Catalog			
Reason for Modification	Parts Catalog Correction			

Please correct your parts catalog as follows:

Incorrect Part Number	Correct Part Number	Description	Page	Index
C2033017	C2123114	Original Guide	51	5

T. Ito, Manager
Copier Technical Support

MODEL NAME	V/Hz	DESTINATION	CODE	SERIAL NUMBER
Ges 5330	120/60	USA, Canada	C212-12	
Ges 5330	110/60	Taiwan	C212-13	
Rex 1260	110/60	Taiwan	C212-14	
Rex 1260	120/60	USA, Canada	C212-15	
NSA CP330	120/60	USA, Canada	C212-16	
Ricoh VT2300	120/60	USA, Canada	C212-17	
Ricoh VT2300	110/60	Taiwan	C212-19	
Ges 5330	220, 240/50	Europe, Asia	C212-22	
Rex 1260	220, 240/50	Europe, Asia	C212-24	
NSA CP330	220, 240/50	Europe, Asia	C212-25	
Ricoh VT2300	220, 240/50	Europe	C212-27	
Ricoh VT2300	220, 240/50	Asia	C212-29	
Ricoh VT2500	120/60	USA, Canada	C213-17	
Ricoh VT2500	110/60	Taiwan	C213-19	
Ricoh VT2500	220, 240/50	Europe	C213-27	
Ricoh VT2500	220, 240/50	Asia	C213-29	

Model	VT2300/2500, Ges 5330, Rex 1260, NSA CP330	Volt/Hz	Date of Modification	Serial Number
Modified Article	Master Eject Sensor			
Reason for Modification	To increase reliability			

Draw No.	Old Parts No.		New Parts No.	Description	A.B.C. Rank	Q'ty Used Old → New	Inter-change-ability	Part needed for replacement by new part: Part No.	Part needed for replacement by new part: Description	Parts Catalog: Index No.	Parts Catalog: Page
	C2078081			Master Eject Sensor Harness							
			C2133560	Master Eject Sensor		1 → 1	X/O			26	61

Rank: A : Replace with new parts immediately. B : Replace with new parts at time of repair. C : Replace with new parts at time of overhaul.

Interchangeability:

(1) When old and new parts are not mutually interchangeable, use additional parts or an assembly part as indicated in "Parts needed for replacement by new part" to install the new part.

(2) The mark to the left of the slash indicates whether the old part can be used in the new machine, and the mark to the right indicates whether the new part can be used in the old machine. x = Not interchangeable o = Interchangeable

DETAILS OF MODIFICATION

It is sometimes reported that the master eject sensor does not detect the ejected master. This probl em happened when the filter [A] was out of position. To prevent this, the drum master detection sensor has been modified. The filter [B] of the new sensor is fixed in position.

The new part C2133560 consists of a photosensor, a bracket and a screw. They are supplied as an asse mbly.

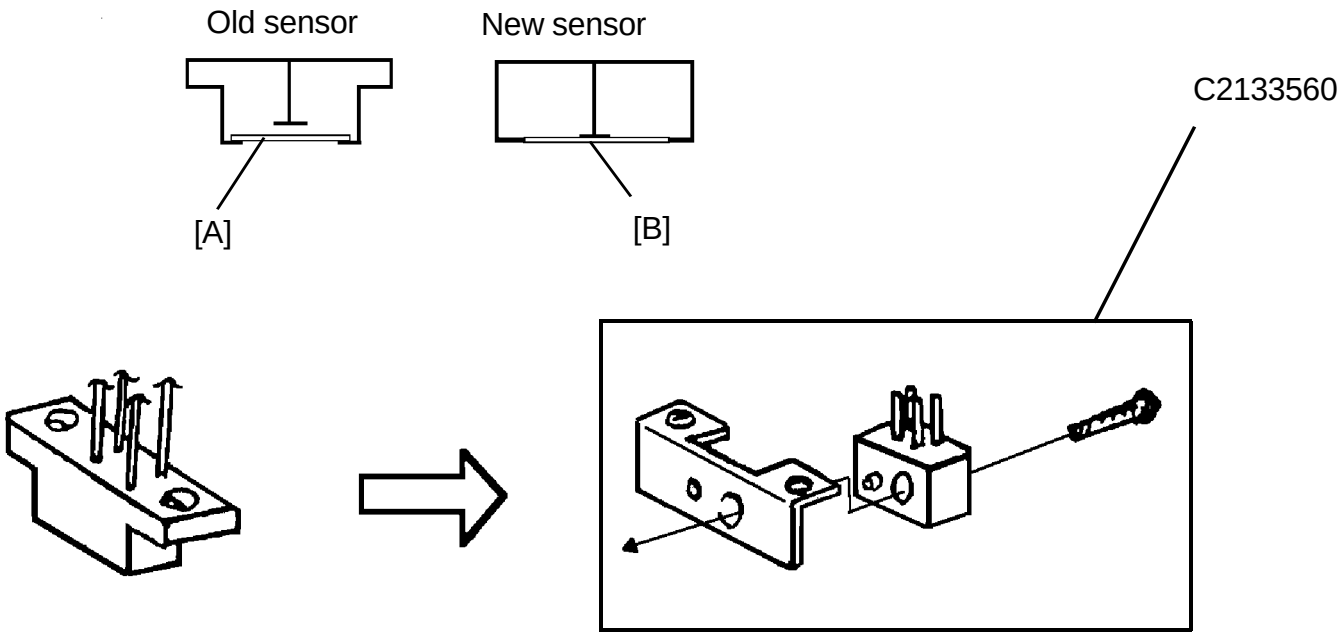

T. Ito, Manager
Copier Technical Support

MODEL NAME	V/Hz	DESTINATION	CODE	SERIAL NUMBER
Ges 5330	120/60	USA, Canada	C212-12	50522050001
Ges 5330	110/60	Taiwan	C212-13	From June ’92 Production
Rex 1260	110/60	Taiwan	C212-14	From June ’92 Production
Rex 1260	120/60	USA, Canada	C212-15	From June ’92 Production
NSA CP330	120/60	USA, Canada	C212-16	From June ’92 Production
Ricoh VT2300	120/60	USA, Canada	C212-17	From June ’92 Production
Ricoh VT2300	110/60	Taiwan	C212-19	From June ’92 Production
Ges 5330	220, 240/50	Europe, Asia	C212-22	50512050001
Rex 1260	220, 240/50	Europe, Asia	C212-24	50512050121
NSA CP330	220, 240/50	Europe, Asia	C212-25	50512050130
Ricoh VT2300	220, 240/50	Europe	C212-27	From June ’92 Production
Ricoh VT2300	220, 240/50	Asia	C212-29	C2812050001
Ricoh VT2500	120/60	USA, Canada	C213-17	From June ’92 Production
Ricoh VT2500	110/60	Taiwan	C213-19	From June ’92 Production
Ricoh VT2500	220, 240/50	Europe	C213-27	C2822050001
Ricoh VT2500	220, 240/50	Asia	C213-29	C2822050059

Model	VT2300/2500, Ges5330, Rex1260, NSA CP330	Volt/Hz	Date of Modification	Serial Number
Modified Article	Drum drive gear			
Reason for Modification	To increase durability			

To increase durability, the material of the drum drive gears (drum side and machine side) have been changed.

Old Part Number	New Part Number	Description	Interchangeability	Page	Index
C2012218	C2132218	Stud & Gear - 30T	X/O	13	1
C2032330	C2132330	Drum Drive Gear/Pulley Ass’y	X/O	13	9
C2034560	C2134560	Rear Drum Flange	X/O	43	41

T. Ito, Manager
Copier Technical Support

MODEL NAME	V/Hz	DESTINATION	CODE	SERIAL NUMBER
Ges 5330	120/60	USA, Canada	C212-12	50522060001
Ges 5330	110/60	Taiwan	C212-13	From July ’92 Production
Rex 1260	110/60	Taiwan	C212-14	From July ’92 Production
Rex 1260	120/60	USA, Canada	C212-15	From July ’92 Production
NSA CP330	120/60	USA, Canada	C212-16	From July ’92 Production
Ricoh VT2300	120/60	USA, Canada	C212-17	From July ’92 Production
Ricoh VT2300	110/60	Taiwan	C212-19	From July ’92 Production
Ges 5330	220, 240/50	Europe, Asia	C212-22	50512060001
Rex 1260	220, 240/50	Europe, Asia	C212-24	50512060160
NSA CP330	220, 240/50	Europe, Asia	C212-25	50512060167
Ricoh VT2300	220, 240/50	Europe	C212-27	From July ’92 Production
Ricoh VT2300	220, 240/50	Asia	C212-29	From July ’92 Production
Ricoh VT2500	120/60	USA, Canada	C213-17	From July ’92 Production
Ricoh VT2500	110/60	Taiwan	C213-19	From July ’92 Production
Ricoh VT2500	220, 240/50	Europe	C213-27	From July ’92 Production
Ricoh VT2500	220, 240/50	Asia	C213-29	From July ’92 Production

ISSUED ON: March 31, '93

Model	VT2300/2500, Ges 5330, Rex 1260, NSA CP330	Volt/Hz	Date of Modification	Serial Number
Modified Article	Main Board Fuses			
Reason for Modification	Vender change			

Due to vender change, part numbers of the main board fuses have been changed as follows:.

Old Part Number	New Part Number	Description	Interchangeability	Index	Page
11070585		Fuse - 50A 125V	O/O	109	69
	11070713	Fuse - K19374 / 2A		109	69
11070685		Fuse - 50A 125V	O/O	110	69
	11070712	Fuse - K19374 / 5A		110	69

The breaking capacity (50A/125V) was incorrectly described for the old parts descriptions. Values of the new descriptions are at the rated current.

T. Ito, Manager
Copier Technical Support

MODEL NAME	V/Hz	DESTINATION	CODE	SERIAL NUMBER
Ges 5330	120/60	USA, Canada	C212-12	
Ges 5330	110/60	Taiwan	C212-13	
Rex 1260	110/60	Taiwan	C212-14	
Rex 1260	120/60	USA, Canada	C212-15	
NSA CP330	120/60	USA, Canada	C212-16	
Ricoh VT2300	120/60	USA, Canada	C212-17	
Ricoh VT2300	110/60	Taiwan	C212-19	
Ges 5330	220, 240/50	Europe, Asia	C212-22	
Rex 1260	220, 240/50	Europe, Asia	C212-24	
NSA CP330	220, 240/50	Europe, Asia	C212-25	
Ricoh VT2300	220, 240/50	Europe	C212-27	
Ricoh VT2300	220, 240/50	Asia	C212-29	
Ricoh VT2500	120/60	USA, Canada	C213-17	
Ricoh VT2500	110/60	Taiwan	C213-19	
Ricoh VT2500	220, 240/50	Europe	C213-27	
Ricoh VT2500	220, 240/50	Asia	C213-29	

ISSUED ON: October 15, '93

Model	VT2300/2500, Ges5330, Rex1260, NSA CP330	Volt/Hz	Date of Modification	Serial Number
Modified Article	Reverse Roller Clutch			
Reason for Modification	To erase horizontal white line in photo mode			

Draw No.	Old Parts No.		New Parts No.	Description	Rank	Q'ty Used Old → New	Inter-change-ability	Part needed for replacement by new part		Parts Catalog	
								Part No.	Description	No.	Page
	C2138112		C2138116	Main Board - 120V		1 → 1	O/O			31	65
	C2138113		C2138117	Main Board Europe, Taiwan		1 → 1	O/O			31	65
	C2138045		C2118057	IC - μPD27C256AD - 20		1 → 1	O/O			32	65

Rank: A : Replace with new parts immediately.B : Replace with new parts at time of repair.C : Replace with new parts at time of overhaul.

Interchangeability:

(1) When old and new parts are not mutually interchangeable, use additional parts or an assembly part as indicated in "Parts needed for replacement by new part" to install the new part.

(2) The mark to the left of the slash indicates whether the old part can be used in the new machine, and the mark to the right indicates whether the new part can be used in the old machine. x = Not interchangeable o = Interchangeable

ISSUED ON: October 15, '93

Draw No.	Old Parts No.		New Parts No.	Description	Rank	Q'ty Used Old → New	Inter-change-ability	Part needed for replacement by new part		Parts Catalog	
								Part No.	Description	No.	Page
	C2008440			Reverse Roller Solenoid		1 → 0					
	C2004223			Reverse Solenoid Bracket		1 → 0					
	C2004216			Reverse Roller Clutch Barrel		1 → 0					
	C2004217			Reverse Roller Clutch Sleeve		1 → 0					
	C2004215			Reverse Roller Clutch Spring		1 → 0					
	C2004213			Pulley - 28T		1 → 0					
	C2014068			Reverse Roller Clutch Pawl		1 → 0			X/O as a set		
	56073616			Guide Plate Spring		1 → 0					
	06220060E			Spring Pin - 2 x 6mm		1 → 0					
	03140080Z			Philips Screw - 4 x 8		1 → 0					
	05740060E			Hexagon Headless Screw - M4 x 6		1 → 0					
	03130200Z			Philips Screw - 3 x 5		1 → 0					
	C2134046			Upper Reverse Roller		1 → 0					
			C2154200	Clutch Stopper		0 → 1					
			C2158240	Reverse Roller Clutch		0 → 1					
			09604008Z	Flange Head Screw - 4 x 8		0 → 1					
			C2154046	Upper Reverse Roller		0 → 1					

DETAILS OF MODIFICATION

It has been found that a horizontal thin white line appears 64 mm from the leading edge of prints. The line may be visible when the image is made using the photo mode. This line is caused by a shock wave when the master is clamped by the drum master clamper.

1. To erase this white line, the software has been changed to delay the timing of the master clamping. With the old software, the reverse roller solenoid [A] and the master clamper solenoid were turned off at the same time. (Due to the slow response of the old spring clutch, the reverse roller stops feeding the master after the master was clamped.) The new software enables that the master is clamped when the master is fed 2 mm further after the reverse roller stops feeding the master. This allows to make a small buckle of the master, which absorbs the shock wave, between the platen roller and the reverse roller before the leading edge of the master is clamped.

The new ROM can be used also for existing machines. The only side effect is that the image on prints is forwarded about 1 or 2 mm due to the slow response of the old mechanism. (This value varies due to ratchets of the clutch gear.) If the old ROM is used for a modified machine (this is the same situation as the new clutch mechanism installed on the old machine), the image is shifted approximately 0.6 mm backwards.

NOTE: The part numbers of the ROMs and main PCBs for the VT2000 series have been changed. The main PCBs have not been changed except for the ROMs. The old PCBs and the new PCBs are interchangeable.

2. To enable the proper reverse roller stop timing, the reverse roller clutch mechanism has been changed from the conbination of a solenoid [A] and a spring clutch [B] to an electrical clutch [C]. To cope with the strictly controlled reverse roller stop timing, the electrical clutch responds a little bit quicker than the old clutch mechanism. (If the old spring clutch is used, the only side effect is as mentioned above.)

To make assembly of the clutch stopper [E] in the factory easier, a projection [F] is added on the right side plate [D] (C2164005). Even if the side plate does not have this projection, the clutch stopper can be installed on the side plate with one screw [G] (09604008Z). So, the part number of the right side plate has not been changed. Also, the shape of the upper reverse roller shaft [H] has been changed to match the electrical clutch. The old spring clutch [B] can be replaced with the new electrical clutch [C] (C2158240) with the clutch stopper [G] (C2154200) and the upper reverse roller (C2154046).

ISSUED ON: October 15, '93

DETAILS OF MODIFICATION

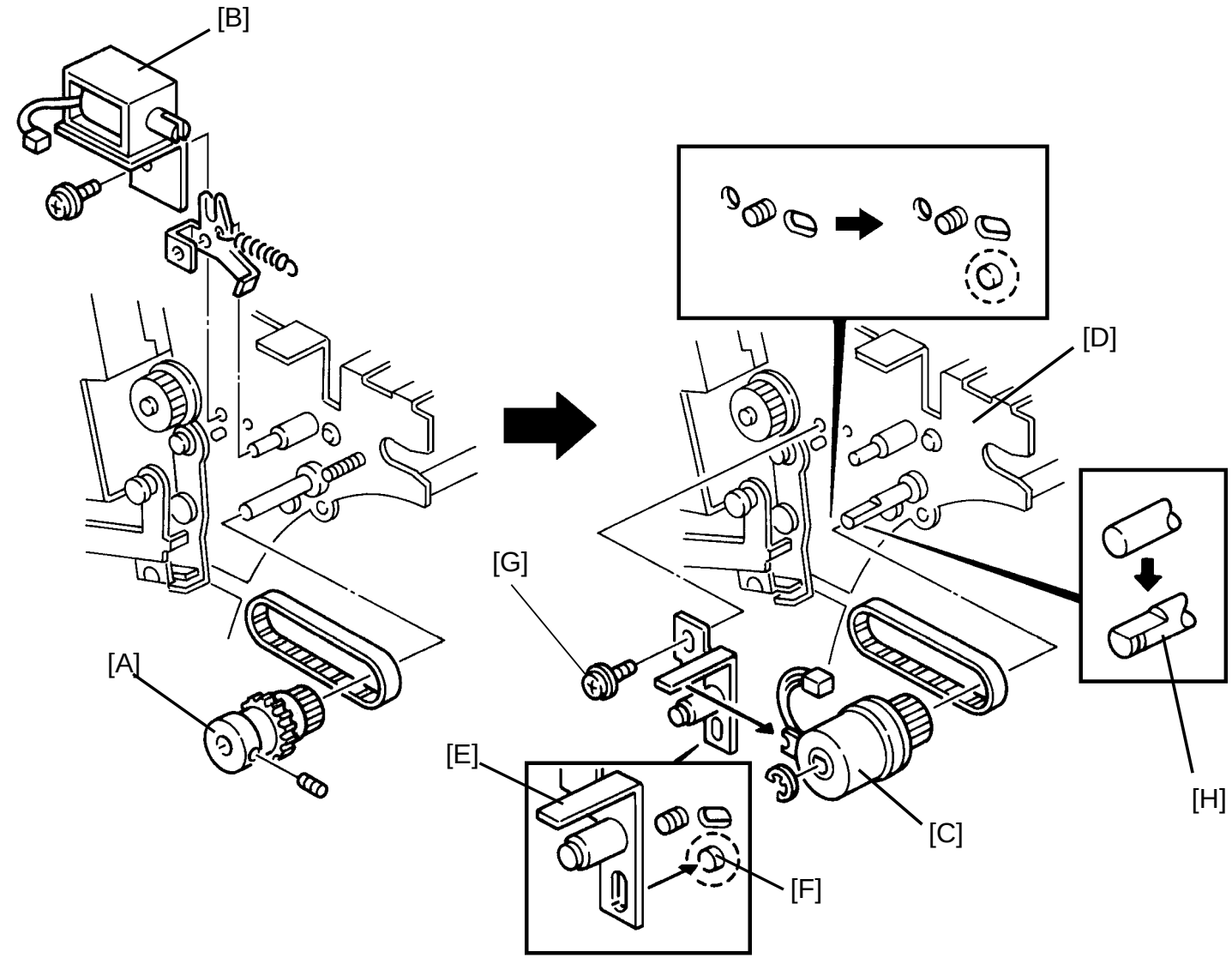

T. Ito, Manager
Copier Technical Support

MODEL NAME	V/Hz	DESTINATION	CODE	SERIAL NUMBER
Ges 5330	120/60	USA, Canada	C212-12	50523040001
Ges 5330	110/60	Taiwan	C212-13	From September '93 Production
Rex 1260	110/60	Taiwan	C212-14	From September '93 Production
Rex 1260	120/60	USA, Canada	C212-15	From September '93 Production
NSA CP330	120/60	USA, Canada	C212-16	From September '93 Production
Ricoh VT2300	120/60	USA, Canada	C212-17	From September '93 Production
Ricoh VT2300	110/60	Taiwan	C212-19	From September '93 Production
Ges 5330	220, 240/50	Europe, Asia	C212-22	50513060001
Rex 1260	220, 240/50	Europe, Asia	C212-24	From September '93 Production
NSA CP330	220, 240/50	Europe, Asia	C212-25	50513060006
Ricoh VT2300	220, 240/50	Europe	C212-27	From September '93 Production
Ricoh VT2300	220, 240/50	Asia	C212-29	C2813050001
Ricoh VT2500	120/60	USA, Canada	C213-17	From September '93 Production
Ricoh VT2500	110/60	Taiwan	C213-19	From September '93 Production
Ricoh VT2500	220, 240/50	Europe	C213-27	From September '93 Production
Ricoh VT2500	220, 240/50	Asia	C213-29	C2823060001

ISSUED ON February 15, '94

Model	VT2300/2500, Ges5330, Rex1260, NSA CP330	Volt/Hz	Date of Modification	Serial Number
Modified Article	ADF Stopper			
Reason for Modification	Parts standardization			

Due to parts standardization, the following part has been changed.

Old P/N	New P/N	Description	Q'ty Used	Inter-change-ability	Parts Catalog	
					Index No.	Page
C2023131	C2093141	Stopper	1 → 1	O/O	31	47

S. Hamano, Assistant General Manager
Technical Support Department

ISSUED ON February 15, ’94

MODEL NAME	V/Hz	DESTINATION	CODE	SERIAL NUMBER
Ges 5330	120/60	USA, Canada	C212-12	
Ges 5330	110/60	Taiwan	C212-13	
Rex 1260	110/60	Taiwan	C212-14	
Rex 1260	120/60	USA, Canada	C212-15	
NSA CP330	120/60	USA, Canada	C212-16	
Ricoh VT2300	120/60	USA, Canada	C212-17	
Ricoh VT2300	110/60	Taiwan	C212-19	
Ges 5330	220, 240/50	Europe, Asia	C212-22	
Rex 1260	220, 240/50	Europe, Asia	C212-24	
NSA CP330	220, 240/50	Europe, Asia	C212-25	
Ricoh VT2300	220, 240/50	Europe	C212-27	
Ricoh VT2300	220, 240/50	Asia	C212-29	
Ricoh VT2500	120/60	USA, Canada	C213-17	
Ricoh VT2500	110/60	Taiwan	C213-19	
Ricoh VT2500	220, 240/50	Europe	C213-27	
Ricoh VT2500	220, 240/50	Asia	C213-29	

ISSUED ON:February 15, '94

Model	VT2300/2500, Ges 5330, Rex 1260, NSA CP330	Volt/Hz	Date of Modification	Serial Number
Modified Article	Upper Hinge - Front Door			
Reason for Modification	Parts standardization			

Due to parts standardization, the following part has been changed.

Old P/N	New P/N	Description	Q'ty Used	Inter-change-ability	Parts Catalog	
					Index No.	Page
C2132405	C2162405	Upper Hinge - Front Door	1 → 1	O/O		9

S. Hamano, Assistant General Manager
Technical Support Department

ISSUED ON:February 15, ’94

MODEL NAME	V/Hz	DESTINATION	CODE	SERIAL NUMBER
Ges 5330	120/60	USA, Canada	C212-12	
Ges 5330	110/60	Taiwan	C212-13	
Rex 1260	110/60	Taiwan	C212-14	
Rex 1260	120/60	USA, Canada	C212-15	
NSA CP330	120/60	USA, Canada	C212-16	
Ricoh VT2300	120/60	USA, Canada	C212-17	
Ricoh VT2300	110/60	Taiwan	C212-19	
Ges 5330	220, 240/50	Europe, Asia	C212-22	
Rex 1260	220, 240/50	Europe, Asia	C212-24	
NSA CP330	220, 240/50	Europe, Asia	C212-25	
Ricoh VT2300	220, 240/50	Europe	C212-27	
Ricoh VT2300	220, 240/50	Asia	C212-29	
Ricoh VT2500	120/60	USA, Canada	C213-17	
Ricoh VT2500	110/60	Taiwan	C213-19	
Ricoh VT2500	220, 240/50	Europe	C213-27	
Ricoh VT2500	220, 240/50	Asia	C213-29	

MODIFICATION BULLETIN NO. 21

ISSUED ON: March 15, '94

Model	VT2300/2500, Ges5330, Rex1260, NSA CP330	**Volt/Hz**	**Date of Modification**	**Serial Number**
Modified Article	Lever Shaft			
Reason for Modification	To facilitate servicing			

Draw No.	Old Parts No.		New Parts No.	Description	Rank	Q'ty Used Old→New	Inter-change-ability	Parts needed for replacement by new part		Parts Catalog	
								Part No.	Description	No.	Page
	C2035010			Lever Shaft		2 → 0				4	23
			C2095220	Spacer - 4 x 20 x 6		0 → 2			O/O as a set	4	23
			03140100Z	Phlips Screw - M4 x 10		0 → 2				*111	23
									* New Index		

Rank: A : Replace with new parts immediately. B : Replace with new parts at time of repair. C : Replace with new parts at time of overhaul.

Interchangeability:

(1) When old and new parts are not mutually interchangeable, use additional parts or an assembly part as indicated in "Parts needed for replacement by new part" to install the new part.

(2) The mark to the left of the slash indicates whether the old part can be used in the new machine, and the mark to the right indicates whether the new part can be used in the old machine. x = Not interchangeable o = Interchangeable

ISSUED ON: March 15, '94

DETAILS OF MODIFICATION

To facilitate servicing, the stepped screw supporting the paper feed pressure lever has been changed with a combination of a spacer and a philips screw - M4 x 10.

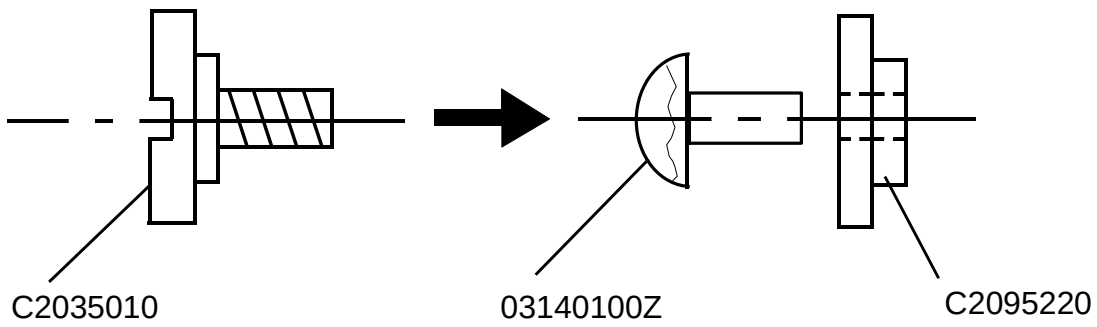

S. Hamano, Assistant General Manager
Technical Support Department

MODEL NAME	V/Hz	DESTINATION	CODE	SERIAL NUMBER
Ges 5330	120/60	USA, Canada	C212-12	
Ges 5330	110/60	Taiwan	C212-13	
Rex 1260	110/60	Taiwan	C212-14	
Rex 1260	120/60	USA, Canada	C212-15	
NSA CP330	120/60	USA, Canada	C212-16	
Ricoh VT2300	120/60	USA, Canada	C212-17	
Ricoh VT2300	110/60	Taiwan	C212-19	
Ges 5330	220, 240/50	Europe, Asia	C212-22	
Rex 1260	220, 240/50	Europe, Asia	C212-24	
NSA CP330	220, 240/50	Europe, Asia	C212-25	
Ricoh VT2300	220, 240/50	Europe	C212-27	
Ricoh VT2300	220, 240/50	Asia	C212-29	
Ricoh VT2500	120/60	USA, Canada	C213-17	
Ricoh VT2500	110/60	Taiwan	C213-19	
Ricoh VT2500	220, 240/50	Europe	C213-27	
Ricoh VT2500	220, 240/50	Asia	C213-29	

ISSUED ON: March 15, '94

Model	VT2300/2500, Ges5330, Rex1260, NSA CP330	Volt/Hz	Date of Modification	Serial Number
Modified Article	Drum Rail Stay			
Reason for Modification	Parts standardization			

Due to parts standardization, the following part has been changed.

Incorrect P/N	Correct P/N	Description	Q'ty Used	Inter-change-ability	Parts Catalog	
					Index No.	Page
C2074502	C2154502	Drum Rail Stay	1 → 1	O/O	32	11

S. Hamano, Assistant General Manager
Technical Support Department

ISSUED ON: March 15, '94

MODEL NAME	V/Hz	DESTINATION	CODE	SERIAL NUMBER
Ges 5330	120/60	USA, Canada	C212-12	
Ges 5330	110/60	Taiwan	C212-13	
Rex 1260	110/60	Taiwan	C212-14	
Rex 1260	120/60	USA, Canada	C212-15	
NSA CP330	120/60	USA, Canada	C212-16	
Ricoh VT2300	120/60	USA, Canada	C212-17	
Ricoh VT2300	110/60	Taiwan	C212-19	
Ges 5330	220, 240/50	Europe, Asia	C212-22	
Rex 1260	220, 240/50	Europe, Asia	C212-24	
NSA CP330	220, 240/50	Europe, Asia	C212-25	
Ricoh VT2300	220, 240/50	Europe	C212-27	
Ricoh VT2300	220, 240/50	Asia	C212-29	
Ricoh VT2500	120/60	USA, Canada	C213-17	
Ricoh VT2500	110/60	Taiwan	C213-19	
Ricoh VT2500	220, 240/50	Europe	C213-27	

ISSUED ON: July 31, '94

Model	VT2300/2500, Ges5330, Rex1260, NSA CP330	Volt/Hz	Date of Modification	Serial Number
Modified Article	AC Drive Board			
Reason for Modification	Vender change			

Due to a vender change, the subcomponents of the AC drive board have been changed.

Old P/N	New P/N	Description	Q'ty Used	Inter-change-ability	Parts Catalog	
					Index No.	Page
16001138	16001639	Resistor - 1 Ω 5T ± 10%	1 → 1	O/O	119	75
16001139	16001640	Resistor - 6.8Ω 5T ± 10%	1 → 1	O/O	120	75
16041196	16042528	Capacitor - 100μF 50V	1 → 1	O/O	122	75

S. Hamano, Assistant General Manager
Technical Support Department

ISSUED ON: July 31, ’94

MODEL NAME	V/Hz	DESTINATION	CODE	SERIAL NUMBER
Ges 5330	120/60	USA, Canada	C212-12	
Ges 5330	110/60	Taiwan	C212-13	
Rex 1260	110/60	Taiwan	C212-14	
Rex 1260	120/60	USA, Canada	C212-15	
NSA CP330	120/60	USA, Canada	C212-16	
Ricoh VT2300	120/60	USA, Canada	C212-17	
Ricoh VT2300	110/60	Taiwan	C212-19	
Ges 5330	220, 240/50	Europe, Asia	C212-22	
Rex 1260	220, 240/50	Europe, Asia	C212-24	
NSA CP330	220, 240/50	Europe, Asia	C212-25	
Ricoh VT2300	220, 240/50	Europe	C212-27	
Ricoh VT2300	220, 240/50	Asia	C212-29	
Ricoh VT2500	120/60	USA, Canada	C213-17	
Ricoh VT2500	110/60	Taiwan	C213-19	
Ricoh VT2500	220, 240/50	Europe	C213-27	
Ricoh VT2500	220, 240/50	Asia	C213-29	

Reissued on: February 15, ’95
ISSUED ON: September 15, ’94

Model	VT2300/2500, Ges5330, Rex1260, NSA CP330	Volt/Hz	Date of Modification	Serial Number
Modified Article	Circuit Breaker			
Reason for Modification	Vender change			

Due to a vender change, the following parts have been changed.

Old P/N	New P/N	Description	Q’ty Used	Inter-change-ability	Parts Catalog	
					Index No.	Page
C2032059	C2162059	Circuit Breaker Bracket	1 → 1	X/X	43	65
11070134	11070782	Circuit Breaker - 5A (220/240V)	1 → 1	X/X	127	65
11070154	11070783	Circuit Breaker - 7A (110/120V)	1 → 1	X/X	127	65

O/O as a set

S. Hamano, Assistant General Manager
Technical Support Department

Reissued on: February 15, ’95
ISSUED ON: September 15, ’94

MODEL NAME	V/Hz	DESTINATION	CODE	SERIAL NUMBER
Ges 5330	120/60	USA, Canada	C212-12	From March ’94 Production
Ges 5330	110/60	Taiwan	C212-13	From March ’94 Production
Rex 1260	110/60	Taiwan	C212-14	From March ’94 Production
Rex 1260	120/60	USA, Canada	C212-15	From March ’94 Production
NSA CP330	120/60	USA, Canada	C212-16	From March ’94 Production
Ricoh VT2300	120/60	USA, Canada	C212-17	From March ’94 Production
Ricoh VT2300	110/60	Taiwan	C212-19	From March ’94 Production
Ges 5330	220, 240/50	Europe, Asia	C212-22	50514020001
Rex 1260	220, 240/50	Europe, Asia	C212-24	From March ’94 Production
NSA CP330	220, 240/50	Europe, Asia	C212-25	From March ’94 Production
Ricoh VT2300	220, 240/50	Europe	C212-27	From March ’94 Production
Ricoh VT2300	220, 240/50	Asia	C212-29	From March ’94 Production
Ricoh VT2500	120/60	USA, Canada	C213-17	From March ’94 Production
Ricoh VT2500	110/60	Taiwan	C213-19	From March ’94 Production
Ricoh VT2500	220, 240/50	Europe	C213-27	From March ’94 Production
Ricoh VT2500	220, 240/50	Asia	C213-29	C2814020001

ISSUED ON: September 15, '94

Model	VT2300/2500, Ges5330, Rex1260, NSA CP330	Volt/Hz	Date of Modification	Serial Number
Modified Article	AC Drive Board			
Reason for Modification	To improve reliability			

Old P/N	New P/N	Description	Q'ty Used	Inter-change-ability	Parts Catalog	
					Index No.	Page
12081245		Relay - DC24V	4 → 2		109	79
	12081042	Power Relay - DC24V	0 → 2	X/O	* 129	79

* New Index

To improve reliability, the relays (RA303 and RA304) for the driving paper table drive motor have been changed.

S. Hamano, Assistant General Manager
Technical Support Department

ISSUED ON: September 15, '94

MODEL NAME	V/Hz	DESTINATION	CODE	SERIAL NUMBER
Ges 5330	120/60	USA, Canada	C212-12	50523070001
Ges 5330	110/60	Taiwan	C212-13	From August '93 Production
Rex 1260	110/60	Taiwan	C212-14	From August '93 Production
Rex 1260	120/60	USA, Canada	C212-15	From August '93 Production
NSA CP330	120/60	USA, Canada	C212-16	From August '93 Production
Ricoh VT2300	120/60	USA, Canada	C212-17	From August '93 Production
Ricoh VT2300	110/60	Taiwan	C212-19	From August '93 Production
Ges 5330	220, 240/50	Europe, Asia	C212-22	50513070001
Rex 1260	220, 240/50	Europe, Asia	C212-24	From August '93 Production
NSA CP330	220, 240/50	Europe, Asia	C212-25	From August '93 Production
Ricoh VT2300	220, 240/50	Europe	C212-27	From August '93 Production
Ricoh VT2300	220, 240/50	Asia	C212-29	From August '93 Production
Ricoh VT2500	120/60	USA, Canada	C213-17	From August '93 Production
Ricoh VT2500	110/60	Taiwan	C213-19	From August '93 Production
Ricoh VT2500	220, 240/50	Europe	C213-27	From August '93 Production
Ricoh VT2500	220, 240/50	Asia	C213-29	From August '93 Production

ISSUED ON: September 15, '94

Model	VT2300/2500, Ges5330, Rex1260, NSA CP330	Volt/Hz	Date of Modification	Serial Number
Modified Article	Transformer			
Reason for Modification	To meet new safety standard			

Old P/N	New P/N	Description	Q'ty Used	Inter-change-ability	Parts Catalog	
					Index No.	Page
C2018155	C2168155	Transformer - 235V/105V	1 → 1	X/X	35	65
C2032018	C2162018	Transformer Bracket	1 → 1	X/X	42	65

X/O as a set

To meet new safety standard, the transformer for the 220/240V machines has been changed. Due to this modification, the transformer bracket has also been changed.

S. Hamano, Assistant General Manager
Technical Support Department

ISSUED ON: September 15, '94

MODEL NAME	V/Hz	DESTINATION	CODE	SERIAL NUMBER
Ges 5330	120/60	USA, Canada	C212-12	From August '93 Production
Ges 5330	110/60	Taiwan	C212-13	From August '93 Production
Rex 1260	110/60	Taiwan	C212-14	From August '93 Production
Rex 1260	120/60	USA, Canada	C212-15	From August '93 Production
NSA CP330	120/60	USA, Canada	C212-16	From August '93 Production
Ricoh VT2300	120/60	USA, Canada	C212-17	From August '93 Production
Ricoh VT2300	110/60	Taiwan	C212-19	From August '93 Production
Ges 5330	220, 240/50	Europe, Asia	C212-22	50513070001
Rex 1260	220, 240/50	Europe, Asia	C212-24	From August '93 Production
NSA CP330	220, 240/50	Europe, Asia	C212-25	From August '93 Production
Ricoh VT2300	220, 240/50	Europe	C212-27	From August '93 Production
Ricoh VT2300	220, 240/50	Asia	C212-29	From August '93 Production
Ricoh VT2500	120/60	USA, Canada	C213-17	From August '93 Production
Ricoh VT2500	110/60	Taiwan	C213-19	From August '93 Production
Ricoh VT2500	220, 240/50	Europe	C213-27	From August '93 Production
Ricoh VT2500	220, 240/50	Asia	C213-29	From August '93 Production

ISSUED ON: March 15, '96

Model	VT2300 / 2500, Ges 5330, Rex1260, NSA CP330	Volt/Hz	Date of Modification	Serial Number
Modified Article	Parts Catalog			
Reason for Modification	Parts Catalog Correction			

Correct your parts catalog as follows:

Page 31 PRESS ROLLER SECTION

Add the following part:

New Index	Part Number	Description	Q'ty
28	C2032083	Exit Pawl Bushing	1

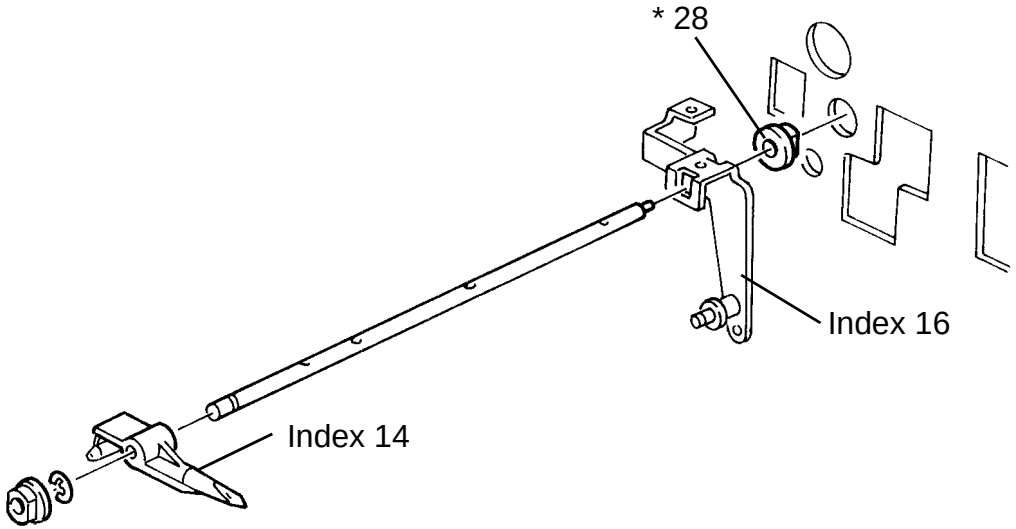

Page 56 PLOTTER / MASTER FEED SECTION II

Correct the illustration for the cutter motor (C2008415) as follows:

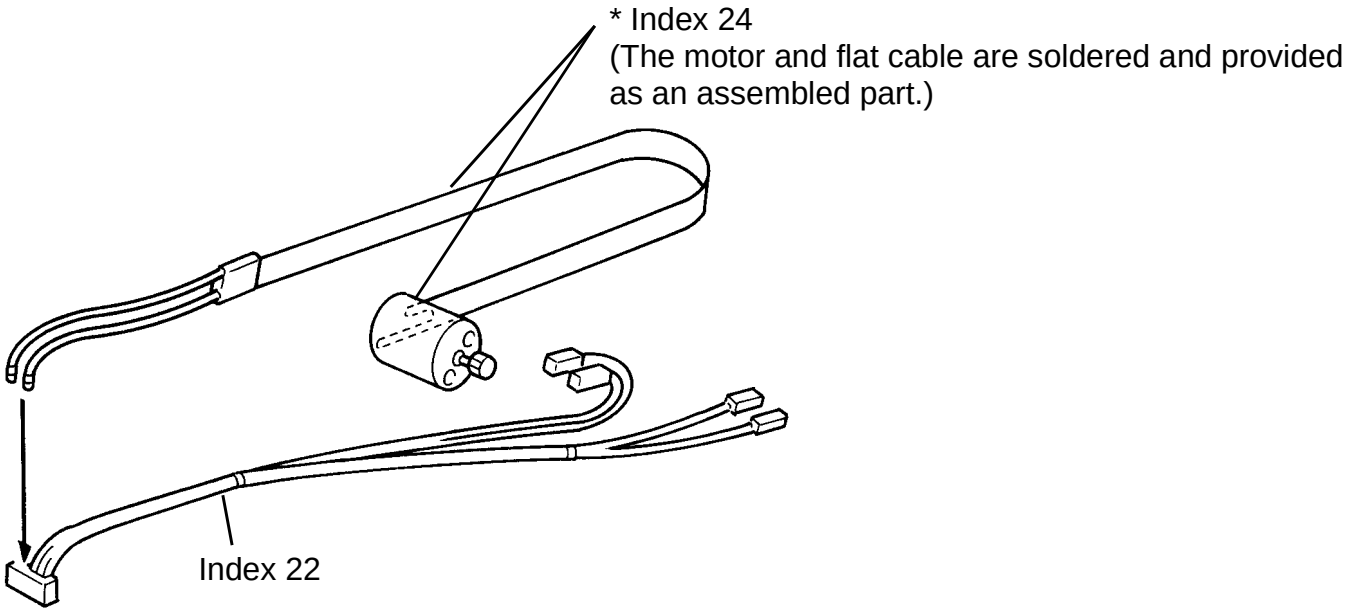

ISSUED ON: March 15, '96

Page 59 PLOTTER / MASTER FEED SECTION III

Add the following parts and correct the illustration as shown below:

New Index	P/N	Description	Q'ty
55	C2002338	Gear - 20T	1
56	53241658	Bushing - 4 x 8 x 4.5 mm	1
57	H0022226	Bushing - Head Roller	1
58	H0121181	Bushing - M6	2
119	07200020Z	Retaining Ring - M2	1
120	07200025Z	Retaining Ring - M2.5	1

Incorrect (* : Incorrect index number or illustration)

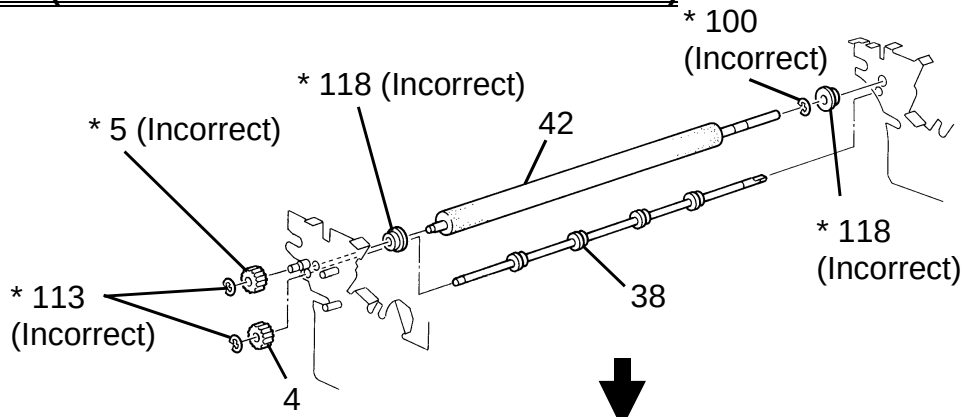

Correct (* : New index number or corrected illustration)

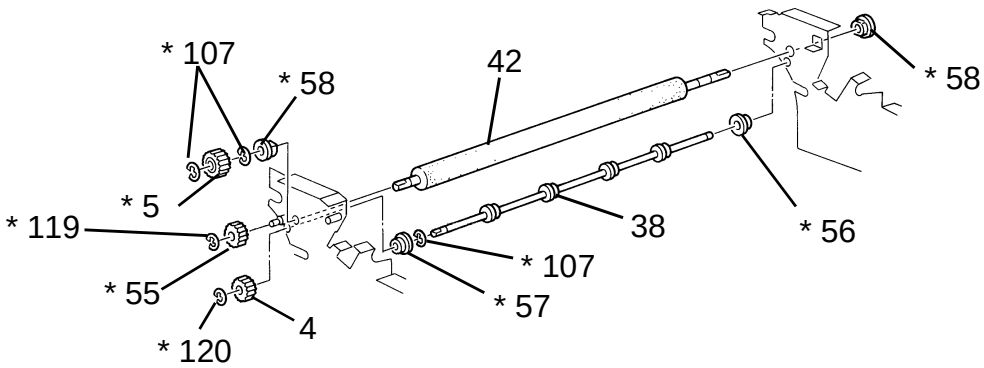

M. Iwasa, Manager
Technical Support Department

MODEL NAME	V/Hz	DESTINATION	CODE	SERIAL NUMBER
Ges 5330	120/60	USA, Canada	C212-12	
Ges 5330	110/60	Taiwan	C212-13	
Rex 1260	110/60	Taiwan	C212-14	
Rex 1260	120/60	USA, Canada	C212-15	
NSA CP330	120/60	USA, Canada	C212-16	
Ricoh VT2300	120/60	USA, Canada	C212-17	
Ricoh VT2300	110/60	Taiwan	C212-19	
Ges 5330	220, 240/50	Europe, Asia	C212-22	
Rex 1260	220, 240/50	Europe, Asia	C212-24	
NSA CP330	220, 240/50	Europe, Asia	C212-25	
Ricoh VT2300	220, 240/50	Europe	C212-27	
Ricoh VT2300	220, 240/50	Asia	C212-29	
Ricoh VT2500	120/60	USA, Canada	C213-17	
Ricoh VT2500	110/60	Taiwan	C213-19	
Ricoh VT2500	220, 240/50	Europe	C213-27	
Ricoh VT2500	220, 240/50	Asia	C213-29	

ISSUED ON: March 15, '96

Model	VT2300 / 2500, Ges 5330, Rex1260, NSA CP330	Volt/Hz	Date of Modification	Serial Number
Modified Article				
Reason for Modification	Due to parts standardization with other models			

Draw No.	Old Parts No.		New Parts No.	Description	Rank	Q'ty Used Old→New	Inter-change-ability	Parts needed for replacement by new part		Parts Catalog	
								Part No.	Description	No.	Page
	C2002005		C2222072	Bottom Stay		2 → 2	O/O			11	11
	C2032015			Bracket		1 → 0					
			C2242015	Image Processing Board Bracket		0 → 1	O/O			13	11
	C2002340			Washer		1 → 0					
			07010030Z	Flat Washer - M3		0 → 1	O/O			24	13
	C2012226		C2192226	Gear - 22T		1 → 1	O/O			33	13

Rank: A : Replace with new parts immediately. B : Replace with new parts at time of repair. C : Replace with new parts at time of overhaul.
Interchangeability:
(1) When old and new parts are not mutually interchangeable, use additional parts or an assembly part as indicated in "Parts needed for replacement by new part" to install the new part.
(2) The mark to the left of the slash indicates whether the old part can be used in the new machine, and the mark to the right indicates whether the new part can be used in the old machine. x = Not interchangeable o = Interchangeable

ISSUED ON: March 15, '96

Draw No.	Old Parts No.		New Parts No.	Description	Rank	Q'ty Used Old → New	Inter-change-ability	Part needed for replacement by new part		Parts Catalog	
								Part No.	Description	No.	Page
	14030539			Photointerruptor - EE-SX450-P1							
			AW020041	Photointerruptor		n → n	O/O			118 111	15 17
										115 111	21 27
										111 12 105 106	31 47 49 65
	55061535			Right Side Pad		2 → 0					
			C2095092	Rubber Plate Lever		0 → 2	O/O			6	17
	C2035126		C2245126	Right Rack - Paper Feed		1 → 1	O/O			25	17
	C2035128		C2245128	Left Rack - Paper Feed		1 → 1	O/O			40	17

ISSUED ON: March 15, '96

Draw No.	Old Parts No.		New Parts No.	Description	Rank	Q'ty Used Old → New	Inter-change-ability	Part needed for replacement by new part		Parts Catalog	
								Part No.	Description	No.	Page
	C2005207		C2195127	Sector gear Stud		1 → 1	X/X	O/O as a set		3	25
	C2035175		C2245101	Sector Gear		1 → 1	X/X			5	25
	55015929			Spacer - 5.2 mm x 16 mm x 1		1 → 0				1	25
	56001086			Spacer - 10.2 x 20		1 → 0				6	25
	08077018			Washer - M10		3 → 0				104	25
	07200080Z			Retaining Ring - M8		n → n-1				106	25
	55054189		C2156110	Felt - Side Plate		1 → 1	O/O			22	37
	C2004941		C2194941	Clamper Shaft		1 → 1	O/O			30	43
	C2004947		C2224947	Clamper Rubber		2 → 2	O/O			31	43
	C2074950		C2154950	Drum Clamper Base Ass'y		1 → 1	O/O			32	43
	C2074948		C2194948	Drum Clamper Ass'y		1 → 1	O/O			36	43
	C2134583			Tetron Screen Ass'y		1 → 0					
			C2194583	Tetron Screen - B4		0 → 1	O/O			37	43

ISSUED ON: March 15, '96

Draw No.	Old Parts No.		New Parts No.	Description	Rank	Q'ty Used Old → New	Inter-change-ability	Part needed for replacement by new part		Parts Catalog	
								Part No.	Description	No.	Page
1	C2074766		C2154551	Rear Bank Plate		1 → 1	O/O			3	45
1	C2074765		C2154550	Front Bank Plate		1 → 1	O/O			14	45
1	C2004763		C2154554	Sponge - Bank Plate		2 → 2	O/O			21	45
1			C2154557	Spring		0 → 2			* : New Index	* 22	45
	C2014043			Guide Plate - Master Buckle		1 → 0					
			C2154043	Lower Guide Plate		0 → 1	O/O			37	59
	C2003546		C2193546	Lower Belt		4 → 4	O/O			7	61
	C2003545		C2193545	Upper Belt		4 → 4	O/O			9	61

ISSUED ON: March 15, '96

Drawing No. 1

* : New Index

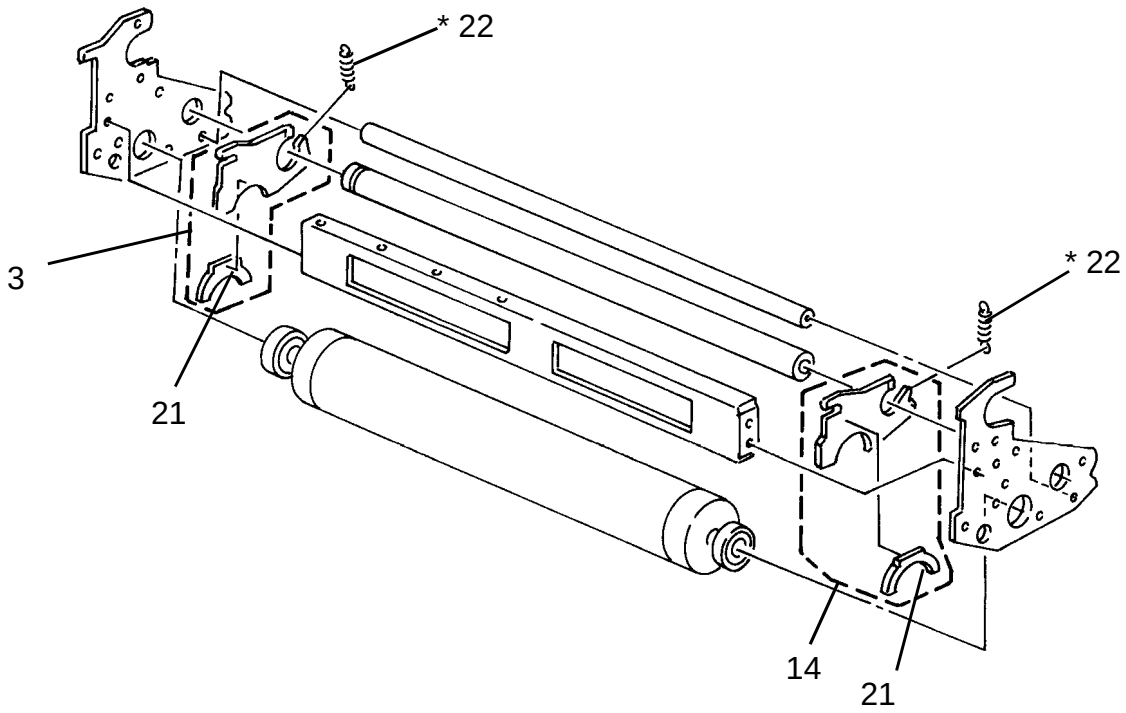

M. Iwasa, Manager
Technical Support Department

ISSUED ON: March 15, '96

MODEL NAME	V/Hz	DESTINATION	CODE	SERIAL NUMBER
Ges 5330	120/60	USA, Canada	C212-12	
Ges 5330	110/60	Taiwan	C212-13	
Rex 1260	110/60	Taiwan	C212-14	
Rex 1260	120/60	USA, Canada	C212-15	
NSA CP330	120/60	USA, Canada	C212-16	
Ricoh VT2300	120/60	USA, Canada	C212-17	
Ricoh VT2300	110/60	Taiwan	C212-19	
Ges 5330	220, 240/50	Europe, Asia	C212-22	
Rex 1260	220, 240/50	Europe, Asia	C212-24	
NSA CP330	220, 240/50	Europe, Asia	C212-25	
Ricoh VT2300	220, 240/50	Europe	C212-27	
Ricoh VT2300	220, 240/50	Asia	C212-29	
Ricoh VT2500	120/60	USA, Canada	C213-17	
Ricoh VT2500	110/60	Taiwan	C213-19	
Ricoh VT2500	220, 240/50	Europe	C213-27	
Ricoh VT2500	220, 240/50	Asia	C213-29	

RICOH Modification Bulletin

Model: PRIPORT N935/N955	**Date:** 15-Jun-99	**No: MC212029**
Modified Article: Upper and Lower Master Eject Belts	**Prepared by:**	
From: Priport Service Planning Section	H. Kokubo	

Classification:
- ☐ Parts catalog correction
- ☐ Vendor change
- ☐ To meet standards ( )
- ☐ To facilitate assembly
- ☒ To improve reliability
- ☐ Part standardization
- ☐ Other ( )

Model Name:
Ricoh VT2300/VT2500, Gestetner 5330, RexRotary 1260, nashuatec CP330

The upper and lower master eject belts have been changed as follows. The new parts have more tolerance against stretching when used over a long period of time.

Old #	New #	Description	Qty	Int	Page	Index
C219 3605	C219 3611	Upper Belt	4 → 4	X/O	61	9
C219 3606	C219 3612	Lower Belt	4 → 4	X/O	61	7

Model: PRIPORT N935/N955	**Date:** 15-Jun-99	**No: MC212029**

CUT IN SERIAL NUMBERS

Model Name	V/Hz	Destination	Code	Serial Number
Ges 5330	120/60	USA, Canada	C212-12	Service Parts Only
Ges 5330	110/60	Taiwan	C212-13	Service Parts Only
Rex 1260	110/60	Taiwan	C212-14	Service Parts Only
Rex 1260	120/60	USA, Canada	C212-15	Service Parts Only
Nsa CP330	120/60	USA, Canada	C212-16	Service Parts Only
Ricoh VT2300	120/60	USA, Canada	C212-17	Service Parts Only
Ricoh VT2300	110/60	Taiwan	C212-19	Service Parts Only
Ges 5330	220, 240/50	Europe, Asia.	C212-22	Service Parts Only
Rex 1260	220, 240/50	Europe, Asia	C212-24	Service Parts Only
Nsa CP330	220, 240/50	Europe, Asia	C212-25	Service Parts Only
Ricoh VT2300	220, 240/50	Europe	C212-27	Service Parts Only
Ricoh VT2300	220, 240/50	Asia	C212-29	Service Parts Only
Ricoh VT2500	120/60	USA, Canada	C213-17	Service Parts Only
Ricoh VT2500	110/60	Taiwan	C213-19	Service Parts Only
Ricoh VT2500	220, 240/50	Europe	C213-27	Service Parts Only
Ricoh VT2500	220, 240/50	Asia	C213-29	Service Parts Only