RICOH

RICOH PRIPORT SS830

PARTS CATALOG

RICOH COMPANY, LTD.

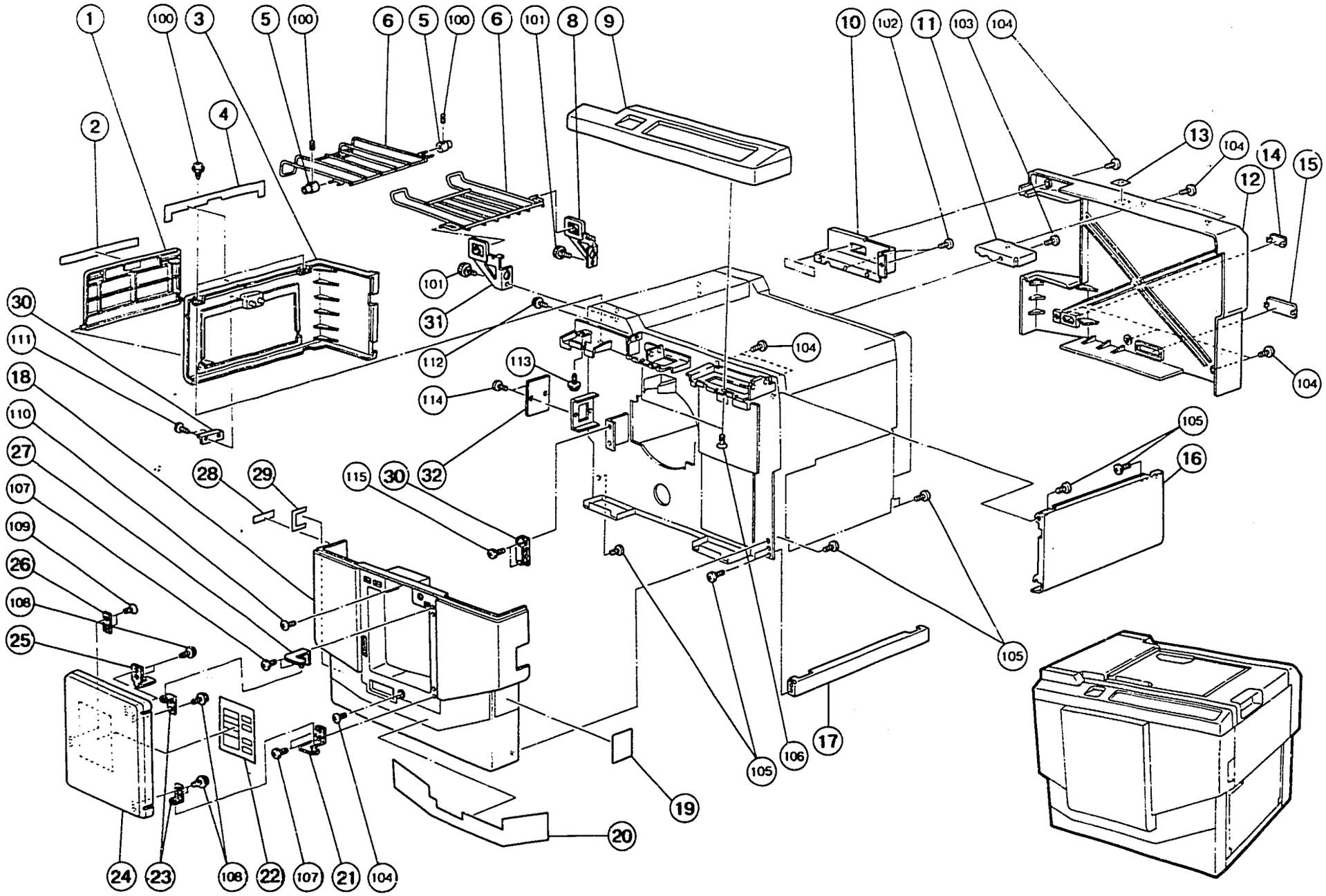
1
100
3
5
100
6
5
100
6
101
8
9
10
102
11
103
104
2
4
13
104
14
15
12
101
31
30
111
112
113
104
104
18
114
110
105
27
28
29
115
30
32
16
107
109
26
108
25
105
105
106
17
19
20
24
23
108
22
107
21
104

1. EXTERIOR

September 15, '88

Index No.	Part No.	Description	Q'ty Per Assembly
1	C201 2415	Master Eject Box Door	1
2	C201 2417	Box Door Sheet	1
3	C201 2435	Master Eject Cover	1
4	C201 2437	Master Eject Sheet	1
5	C200 3153*	Original Tray Collar (SS810)	2
6	C200 3158*	Original Tray (SS810)	1
6	C203 3075	Original Exit Tray (SS830)	1
8	C201 3023	Right Bracket - Original Tray	1
9	C203 2752	Operation Panel Cover	1
10	C203 2431	Rear Bracket	1
11	C203 2430	Rear Cover Bracket	1
12	C203 2756	Rear Cover	1
13	C201 2462	Decal - Original Table	1
14	A006 1327	Left Cover Cap	1
15	C203 2417	Rear Cover Cap	1
16	C201 2428	Paper Feed Cover	1
17	C201 2431	Support Cover	1
18	C201 2706*	Front Cover (SS810)	1
18	C206 2706	Front Cover (SS830)	1
19	C201 2423	Front Cover Sheet - Right	1
20	C201 2456	Front Cover Sheet - Center	1
21	C201 2483	Lower Hinge - Front Door	1
22	C201 2715	Decal - Replacing Drum Unit - LT	1
22	C201 2717	Decal - Replacing Drum Unit - A4	1
23	C201 2485	Hinge Bracket	2
24	C203 2755	Front Door	1
25	C200 2434	Micro Switch Actuater	1
26	C200 2432	Magnet Plate	1
27	C201 2481	Upper Hinge - Front Door	1
28	C203 2731	Decal - Master Eject Open	1
29	C201 2424	Front Cover Sheet - Left	1
30	5054 0536	Magnet Catch Ass'y	6
31	C201 3020	Left Bracket - Original Tray	1
32	C201 2427	Key Counter Cover	1

Index No.	Part No.	Description	Q'ty Per Assembly
100	0573 0040E	Hexagon Headless Set Screw - M3x4	
101	0803 0017	Knob Screw - M4x65	
102	0314 0080Z	Philips Pan Head Screw - M4x8	
103	0801 1004	Screw - M4x4	
104	0344 0080D	Philips Truss Head Screw - M4x8	
105	0314 0080D	Philips Pan Head Screw - M4x8	
106	0323 0100Z	Philips Sunken Head Screw - M3x10	
107	0434 0102Z	Tapping Screw - M4x10	
108	0965 4010Z	Tapping Screw W/T Flat Washer - M4x10	
109	0802 5149	Philips Pan Head Screw - M3x3	
110	0354 0050D	Screw - M4x5	
111	0434 0082W	Tapping Screw - M4x8	
112	0951 3006Z	Philips Screw With Flat Washer - M3x6	
113	0965 3010Z	Tapping Screw W/T Flat Washer - M3x10	
114	0343 0060D	Philips Truss Head Screw - M3x6	
115	0314 0060Z	Philips Pan Head Screw - M4x6	

*This part number does not apply in U.S.

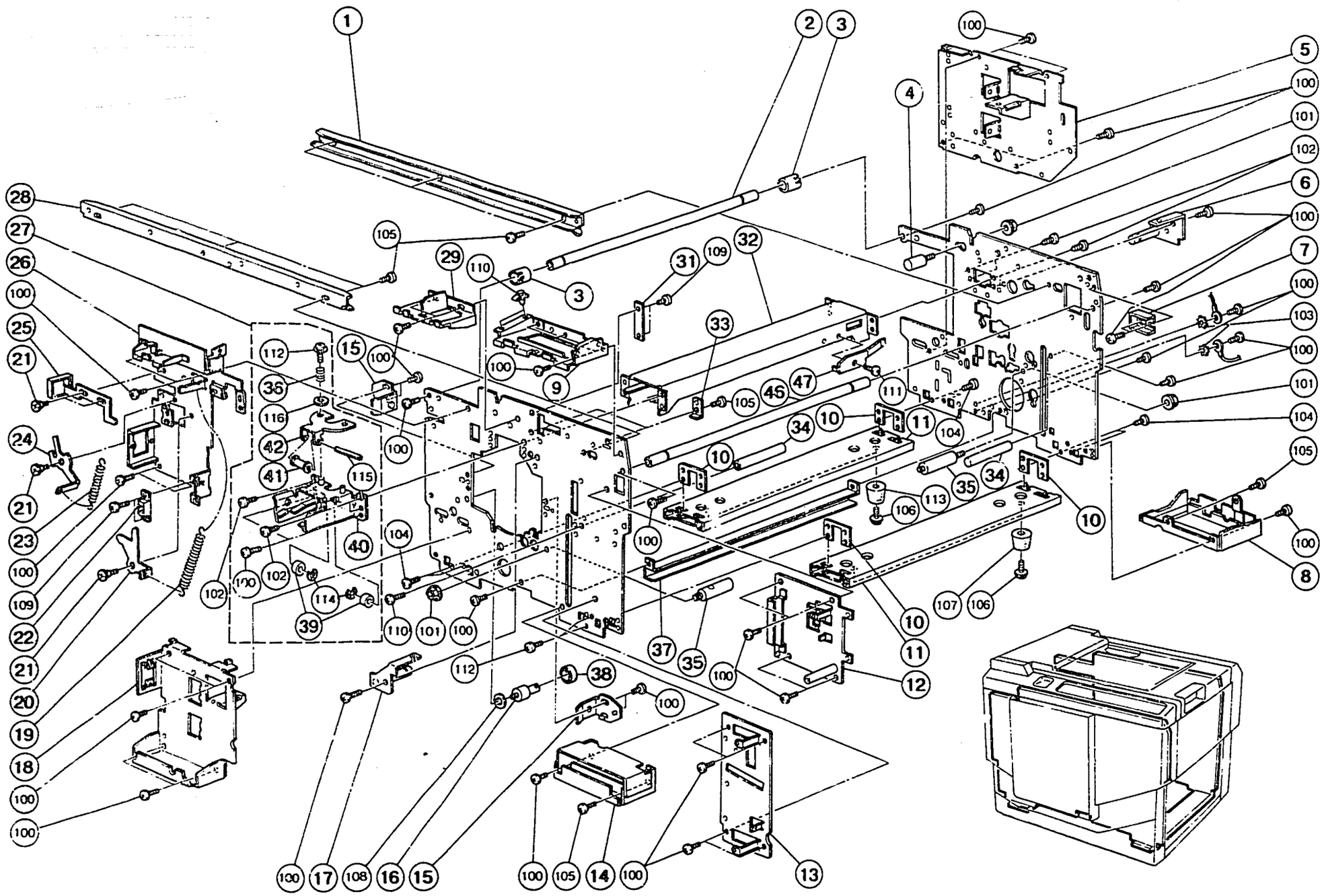
1
2
3
4
5
6
7
8
9
10
11
12
13
14
15
16
17
18
19
20
21
22
23
24
25
26
27
28
29
31
32
33
34
35
36
37
38
39
40
41
42
46
47
100
101
102
103
104
105
106
107
108
109
110
111
112
113
114
115
116

2. FRAME

September 15, '88

Index No.	Part No.	Description	Q'ty Per Assembly
1	C203 3037	Slide Rail	2
2	C203 2091	Front Shaft	1
3	C203 2092	Roller - Front Shaft	2
4	C201 3004*	Stopper Stud (SS810)	1
4	C200 3007	Lever Stopper (SS830)	1
5	C203 2117	Right Grip - Paper Delivery	1
6	C203 2085	Right Fixing Plate	1
7	C200 3006	Stopper	1
8	C203 2120	Right Grip - Paper Feed	1
9	C203 2020	Right Bracket - Operation Panel	1
10	C203 2096	Bottom Stay Nut	4
11	C200 2005	Bottom Stay	2
12	C203 2026	Lever Bracket - Paper Feed	1
13	C203 2015	Bracket	1
14	C203 2055	Left Grip - Paper Feed	1
15	C200 4520	Lock Pin - Drum	2
16	C200 3716	Cushion Shaft	1
17	C203 2041	Left Fixing Plate	1
18	C203 2052	Left Grip - Paper Delivery	1
19	C200 3956	Middle Lever Spring	1
20	C200 3953	Middle Lever	1
21	5403 2075	Stepped Screw	7
22	5054 0536	Magnet Catch Ass'y	1
23	C200 3957	Lower Lever Spring	1
24	C200 3954	Lower Lever	1
25	C203 3509	Upper Lever	1
26	C203 2016	Left Side Plate	1
27	C203 4505	Drum Stopper Ass'y	1
28	C200 4528	Plate Spring - Drum Rail	1
29	C203 2023	Left Bracket - Operation Panel	1
30	C203 2093	Shaft	1
31	C200 3125	Clamp	2
32	C203 4502	Drum Rail Stay	1
33	C201 2404	Operation Panel Bracket	2
34	C203 4073	Recieving Shaft	2

*This part number does not apply in U.S.

Index No.	Part No.	Description	Q'ty Per Assembly
35	C200 2232	Drive Shaft	2
36	C201 4533	Drum Stopper Spring	1
37	C203 8074	Harness Stay	1
38	5501 4719	Rubber Ring - Stopper	3
39	C201 4604	Drum Rail Roller	2
40	C203 4506	Stopper Base	1
41	C201 4532	Drum Stopper Roller	1
42	C201 4531	Drum Stopper Pawl	1
100	0314 0080Z	Philips Pan Head Screw - M4x8	
101	0713 0050B	Hexagon Nut - M5	
102	0434 0100Z	Pan Head Self - Tapping Screw - M4x10	
103	0705 0040B	Bushing - 4x5mm	
104	0315 0120Z	Philips Pan Head Screw - M5x12	
105	0801 1004	Screw - M4x4	
106	0951 5030Z	Philips Screw With Flat Washer - M5x30	
107	0805 6009	Rubber Foot	
108	0807 3083	Washer	
109	0314 0060Z	Philips Pan Head Screw - M4x6	
110	1106 0554	Locking Support	
111	0434 0080Z	Tapping Screw - M4x8	
112	0951 3006Z	Philips Screw With Flat Washer - M3x6	
113	0805 6009	Rubber Foot	
114	0720 0050Z	Retaining Ring - M5	
115	0622 0250E	Spring Pin M2x250	
116	0708 0050Z	Flat Washer - M5	

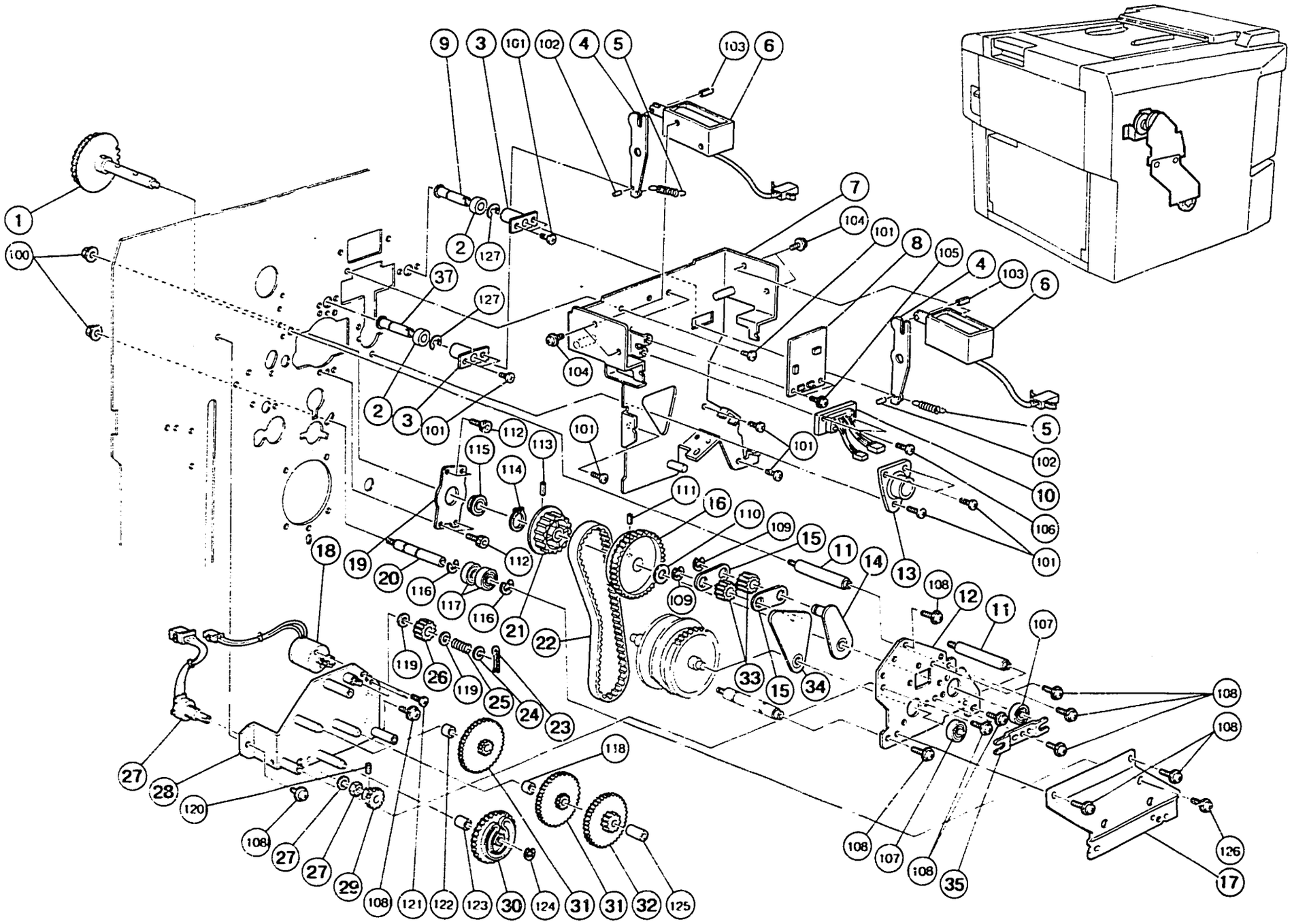
9
3
101
102
4
5
103
6
1
100
2
127
37
7
104
101
8
105
4
103
6
104
2
3
101
112
115
113
114
101
101
5
102
10
106
101
111
16
110
109
15
11
14
13
108
12
11
107
18
19
20
116
117
116
112
21
22
109
119
26
119
25
24
23
33
15
34
108
108
27
28
120
118
108
27
27
29
108
121
122
123
30
124
31
31
32
125
108
107
108
35
126
17

3. DRIVE SECTION I

September 15, '88

Index No.	Part No.	Description	Q'ty Per Assembly
1	C201 2218	Stud & Gear - 30T	1
2	C201 4561	Drum Clamper Roller	2
3	C200 4551	Slide Guide	2
4	C200 4554	Connector Plate	2
5	C200 4561	Clamper Spring	2
6	C200 8437	Master Eject Solenoid	2
7	C203 2080	Solenoid Bracket	1
8	C200 8116	Ink Detecting Board	1
9	C200 4553	Slide Shaft	2
10	C203 8091	Drum Harness	1
11	C201 2211	Stud	2
12	C203 2304	Support Side Plate	1
13	C200 4516	Slide Guide - Drive Shaft	1
14	C200 2308	Image Shifting Arm - Small	1
15	C200 2311	Image Shifting Link	1
16	C201 2217	Gear - 50T	1
17	C203 2318	Reinforcement Plate	1
18	C201 8061	Motor - DC25.8W	1
19	C200 2248	Fixing Plate	1
20	C203 2315	Tension Shaft	1
21	C203 2317	Pulley - 26T	1
22	C203 2316	Timing Belt	1
23	C203 2303	Snap Bushing	1
24	C200 2340	Washer	1
25	C200 2339	Blake Spring	1
26	C200 2338	Gear - 20T	1
27	C200 8450	Encorder	1
28	C200 2321	Bracket - Image Shifting Unit	1
29	C201 2221	Gear - 40T	1
30	C201 2222	Coupled Gear - 20T & 60T	1
31	C200 2331	Gear - 20T	2
32	C200 2332	Gear - 16T	1
33	C201 2226	Gear - 22T	2
34	C200 2302	Image Shifting Arm - Large	1
35	C203 2305	Bearing Supporter	1

Index No.	Part No.	Description	Q'ty Per Assembly
100	0713 0050B	Hexagon Nut - M5	
101	0314 0080Z	Philips Pan Head Screw - M4x8	
102	0622 0060E	Spring Pin - 2x6mm	
103	0623 0120E	Spring Pin - 3x12mm	
104	0951 3005Z	Philips Pan Head Screw - M3x5	
105	0951 3006Z	Philips Screw With Flat Washer - M3x6	
106	0314 0100Z	Philips Pan Head Screw - M4x10	
107	0805 3104	Ball Bearing - 8x22x7mm	
108	0960 4008Z	Flange Head Screw - 4x8	
109	0720 0080Z	Retaining Ring - M8	
110	0807 7013	Spacer - 10.2x14x0.2mm	
111	0804 4046	Spring Pin - 4x16	
112	0594 0080E	Bolt - M4x8	
113	0804 4048	Spring Pin - 4x20	
114	0725 0100Z	Retaining Ring - M10	
115	0805 3134	Ball Bearing - 10x26x8mm	
116	0720 0120Z	Retaining Ring - M12	
117	0740 3012	Ball Bearing - 12x28x8mm	
118	0707 6040B	Bushing - 6x4mm	
119	0807 2071	Washer - 3.1x7x0.2mm	
120	0573 0050E	Hexagon Headless Set Screw - M3x5	
121	0313 0040Z	Philips Pan Head Screw - M3x4	
122	0707 6080B	Bushing - 6x8mm	
123	0707 6120B	Bushing - 6x12mm	
124	0720 0040Z	Retaining Ring - M4	
125	0707 6120B	Bushing - 6x12mm	
126	0951 5008Z	Philips Screw With Flat Washer - M5x8	
127	0720 0050E	Retaining Ring - M5	

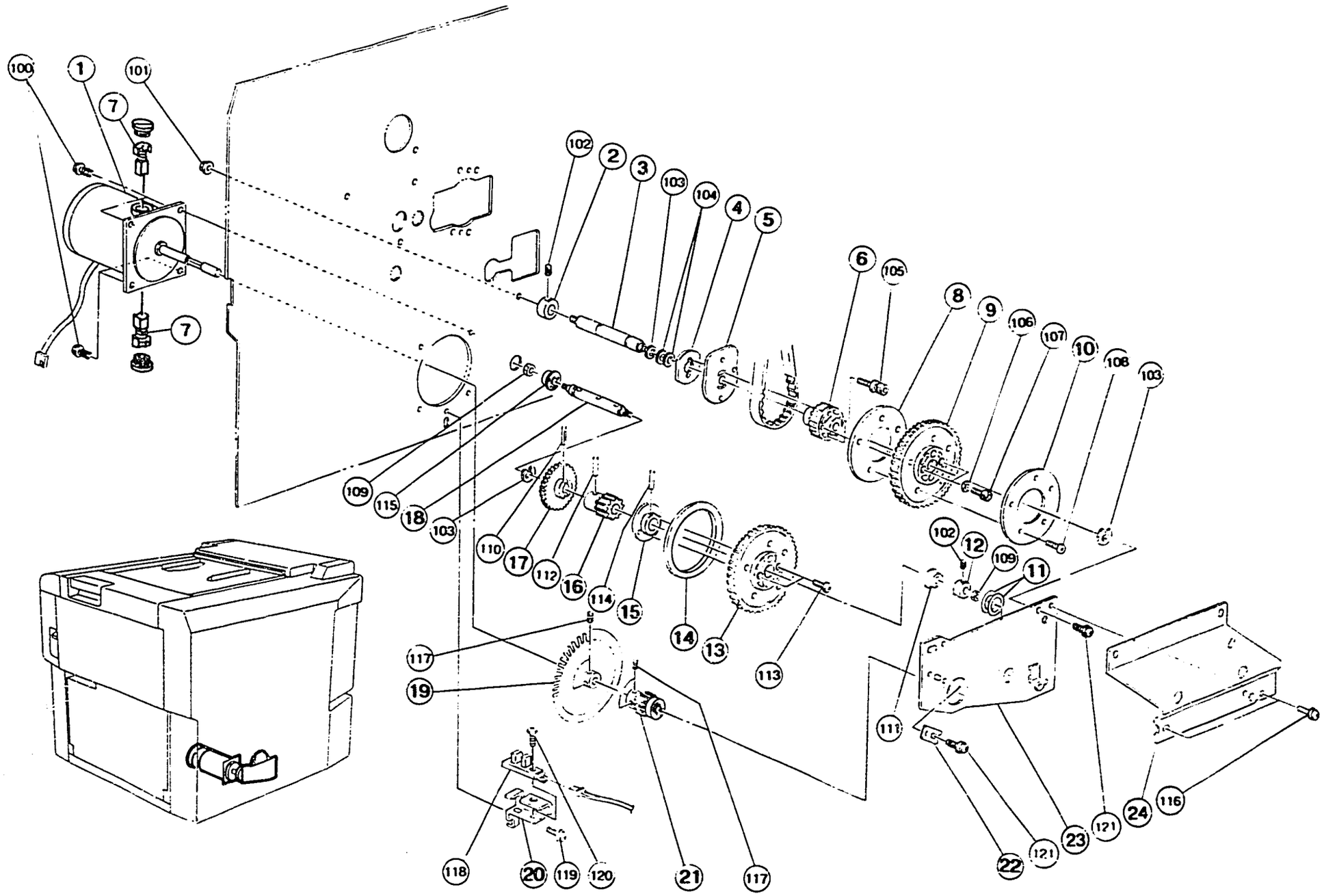
100
1
101
7
7
102
2
3
103
104
4
5
6
105
8
9
106
107
10
108
103
109
115
18
103
110
17
112
16
114
15
14
13
113
102
12
109
11
117
19
111
118
20
119
120
21
117
22
121
23
121
24
116

4. DRIVE SECTION II

September 15, '88

Index No.	Part No.	Description	Q'ty Per Assembly
1	C200 8402	Main Motor - DC80W	1
2	C200 2221	Collar - Pressure Cam Shaft	1
3	C200 2225	Pressure Cam Shaft	1
4	C200 2224	Plate Nut - Print Pressure Cam	1
5	C200 5560	Print Pressure Cam	1
6	C203 2312	Pulley	1
7	C203 8404	Commutation Brush	2
8	C201 2210	Gear Support Plate - Rear	1
9	C200 2226	Gear - 90T	1
10	C201 2212	Gear Support Plate - Front	1
11	C200 2267	Spacer	2
12	C200 2217	Collar	1
13	C203 2326	Gear - 90Z	1
14	C203 2327	Pulley Flange	1
15	C203 2311	Gear Flange	1
16	C203 2215	Gear - 18T	1
17	C200 6053	Gear - 40T	1
18	C203 2216	Driven Shaft	1
19	C203 2309	Pulse Disk	1
20	C200 2205	Bracket - Drum Rotation Sensor	1
21	C201 2207	Gear - 18T	1
22	C201 2209	Bushing Stopper	1
23	C203 2306	Support Side Plate - AID	1
24	C203 2318	Reinforcement Plate	1

Index No.	Part No.	Description	Q'ty Per Assembly
100	0960 4008Z	Flange Head Screw - 4×8	
101	0713 0050B	Hexagon Nut - M5	
102	0574 0040E	Hexagon Headless Set Screw - M4×4	
103	0720 0080Z	Retaining Ring - M8	
104	0807 7013	Spacer - 10.2×14×0.2mm	
105	0804 6092	Hexagonal Set Screw	
106	0700 0050Z	Flat Washer - M5	
107	0595 0120E	Socket Screw - M5×12	
108	0314 0060Z	Philips Pan Head Screw - M4×6	
109	0712 0060Z	Hexagon Nut - M6	
110	0623 0200E	Spring Pin - 3×20mm	
111	0741 3908S	Bearing	
112	0804 4046	Spring Pin - 4×16	
113	0315 0060Z	Philips Pan Head Screw - M5×6	
114	0623 0140E	Spring Pin - 3×14mm	
115	0741 3807S	Bearing	
116	0951 5008Z	Philips Screw With Flat Washer - M5×8	
117	0574 0050E	Hexagon Headless Set Screw - M4×5	
118	1403 0539	Photo Interruptor - EE-SX450-P1	
119	0314 0080Z	Philips Pan Head Screw - M4×8	
120	0314 0120Z	Philips Pan Head Screw - M4×12	
121	0960 4008Z	Flange Head Screw - 4×8	

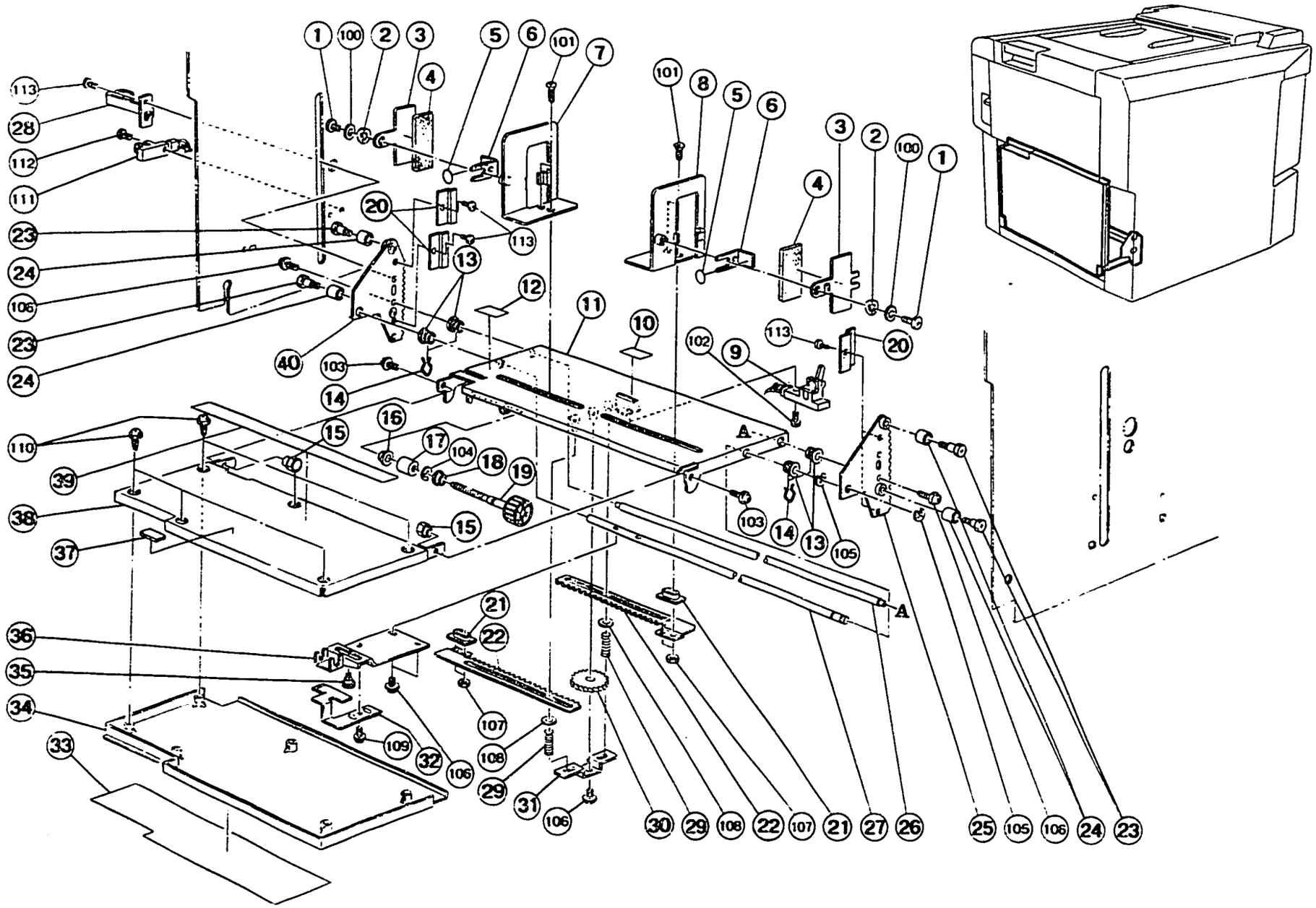
1
100
2
3
4
5
6
101
7
8
9
10
11
12
13
14
15
16
17
18
19
20
21
22
23
24
25
26
27
28
29
30
31
32
33
34
35
36
37
38
39
40
102
103
104
105
106
107
108
109
110
111
112
113
A

5. PAPER TABLE

September 15, '88

Index No.	Part No.	Description	Q'ty Per Assembly
1	5506 1536	Screw - M4x6	2
2	5070 0923	Spring Washer - Rotating Table	2
3	C200 5285	Side Pad	2
4	C200 5287	Rubber Plate - Paper Feed	2
5	C201 5015	Seal - M10	2
6	5506 1535	Right Side Pad	2
7	C200 5279	Left Side Plate - Paper Feed	1
8	C200 5274	Right Side Plate - Paper Feed	1
9	5214 5235	Paper Feed Sensor	1
10	C203 5087	Rubber Plate - Feed Table	1
11	C203 5078	Paper Feed Table	1
12	C203 2453	Decal - Paper Feed Table	1
13	C203 5121	Bushing - 8x12x9mm	4
14	5600 1107	Snap Retainer - 12	4
15	C200 5038	Screw Collar	2
16	C203 5114	Bushing - 3x6x3mm	1
17	C203 5116	Washer - 6x13x12mm	1
18	C203 5113	Bushing - 6x9x3mm	1
19	C203 5109	Knob Screw	1
20	C203 5131	Gear Cover	4
21	C200 5335	Side Plate Slider	2
22	C200 5030	Paper Feed Rack	2
23	C203 5142	Rack Shaft	4
24	5606 2310	Roller	4
25	C203 5126	Right Rack	1
26	C200 5042	Rear Shaft - Paper Feed	1
27	C203 5122	Front Shaft - Paper Feed	1
28	C201 5040	Actuator - Table Lower Limit Switch	1
29	5505 7197	Spring - Hinge - Inking	2
30	5309 1023	Pinion Paper Feed Table	1
31	C203 5105	Supporter	1
32	C203 5120	Position Indicater	1
33	C201 2443	Feed Stand Cover Sheet	1
34	C203 2422	Feed Stand Cover	1
35	C201 5125	Shoulder Screw - M4	1

Index No.	Part No.	Description	Q'ty Per Assembly
36	C203 5119	Arm - Paper Feed Table	1
37	C200 5025	Paper Feed Plate Shield	1
38	C203 5103	Paper Feed Bottom Plate - LT	1
38	C204 5104	Paper Feed Bottom Plate - A4	1
39	C203 2716	Decal - Paper Size - LT	1
39	C204 2718	Decal - Paper Size - A4	1
40	C203 5128	Left Rack	1
100	0701 0080Z	Flat Washer - M8	
101	0323 0100Z	Philips Sunken Head Screw - M3x10	
102	0313 0100Z	Philips Pan Head Screw - M3x10	
103	0951 4010Z	Philips Screw With Flat Washer - M4x10	
104	0720 0040Z	Retaining Ring - M4	
105	0720 0060Z	Retaining Ring - M6	
106	0951 4008Z	Philips Screw With Flat Washer - M4x8	
107	0710 0030Z	Hexagon Nut - M3	
108	0700 0040Z	Flat Washer - M4	
109	0951 3006Z	Philips Screw With Flat Washer - M3x6	
110	0965 3010W	Tapping Screw With Flat Washer - M3x10	
111	1403 0539	Photo Interruptor - EE-SX450-P1	
112	0314 0120Z	Philips Pan Head Screw - M4x12	
113	0314 0080Z	Philips Pan Head Screw - M4x8	

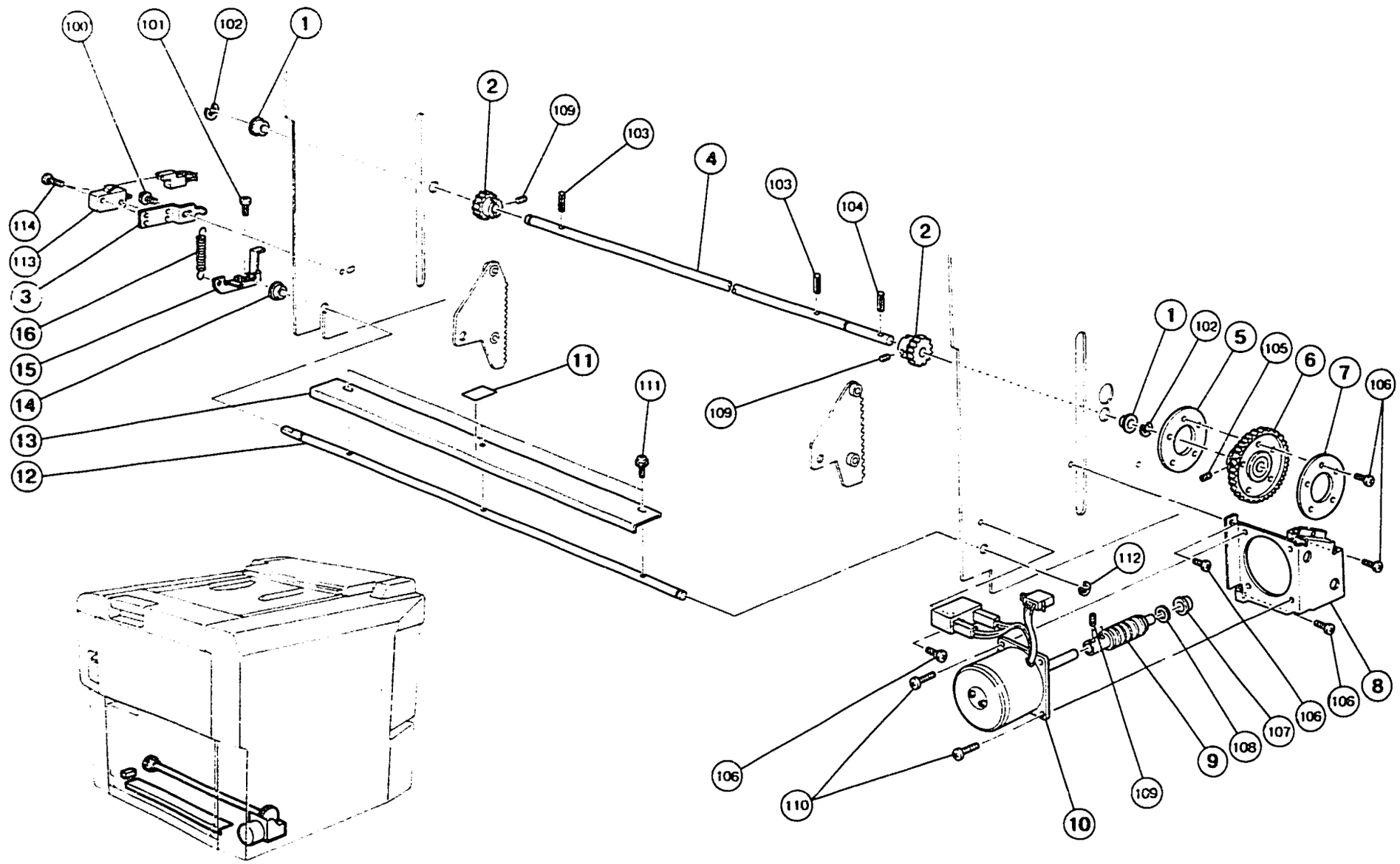
100
101
102
1
2
109
103
4
103
104
2
114
113
3
16
15
14
13
12
11
111
109
1
102
5
105
6
7
106
112
106
110
10
109
9
108
107
106
106
8

6. PAPER TABLE DRIVE

September 15, '88

Index No.	Part No.	Description	Q'ty Per Assembly
1	5053 0419	Bushing - 10mm	2
2	C201 5051	Pinion - 24T	2
3	C201 5161	Bracket - Paper Table Safety Switch	1
4	C203 5133	Paper Feed Table Shaft	1
5	C201 5046	Front Gear Support	1
6	C200 5096	Worm Wheel Gear - 18T	1
7	C201 5045	Rear Gear Support	1
8	C203 5140	Motor Bracket	1
9	C203 5138	Worm Gear	1
10	C203 8130	Motor - AC22W	1
11	5506 6314	Mylar - Master Feed Table	1
12	C203 5152	Safety Switch Shaft	1
13	C203 5158	Safety Switch Plate	1
14	5506 4608	Bushing - Paper Hold/Down Roller	1
15	C203 5153	Safety Switch Actuator	1
16	5607 3906	Safety Switch Spring	1

Index No.	Part No.	Description	Q'ty Per Assembly
100	0951 4005Z	Philips Screw With Flat Washer- M4x5	
101	0313 0060Z	Philips Pan Head Screw - M3x6	
102	0720 0080Z	Retaining Ring - M8	
103	0624 0160E	Spring Pin - 4x16mm	
104	0624 0220E	Spring Pin - 4x22mm	
105	0574 0060E	Hexagon Headless Set Screw - M4x6	
106	0314 0080Z	Philips Pan Head Screw - M4x8	
107	0805 3208	Ball Bearing - 6x10x3mm	
108	0807 4076	Spacer	
109	0574 0040E	Hexagon Headless Set Screw - M4x4	
110	0315 0120Z	Philips Pan Head Screw - M5x12	
111	0951 3006Z	Philips Screw With Flat Washer - M3x6	
112	0720 0050Z	Retaining Ring - M5	
113	1204 1494	Micro Switch	
114	0313 0140Z	Philips Pan Head Screw - M3x14	

7. PAPER FEED ROLLER AND PAPER SEPARATION ROLLER

September 15, '88

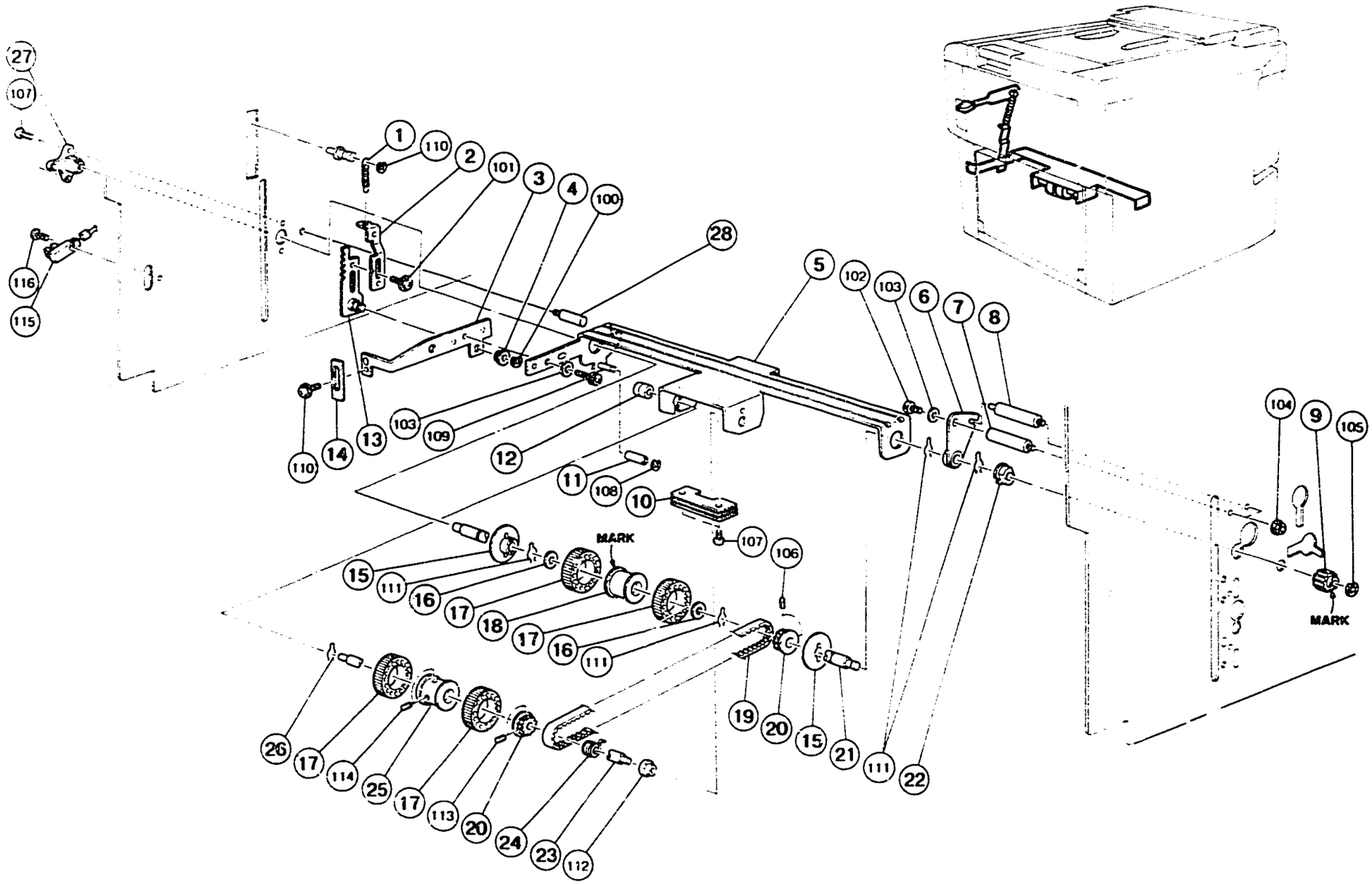

7. PAPER FEED ROLLER AND PAPER SEPARATION ROLLER

September 15, '88

Index No.	Part No.	Description	Q'ty Per Assembly
1	C203 5020	Spring - Feed Roller Pressure	1
2	C203 5025	Spring Link	1
3	C203 5058	Feed Roller Arm	1
4	C203 5113	Bushing - 6×9×3mm	1
5	C203 5057	Feed Roller Holder	1
6	C203 5046	Bushing - 14×20×9mm	1
7	C203 5049	Front Bushing Stud	1
8	C203 5050	Rear Bushing Stud	1
9	5607 2926	Gear - 18T	1
10	C201 5073	Arm Balancer - Feed Roller	1
11	C203 5061	Collar - Reverse Roller Release	1
12	5600 1081	Right Bushing - Paper Feed Roller	1
13	C203 5027	Adjusting Plate	1
14	C203 5055	Actuator - Paper Feed Table	1
15	5606 2066	Paper Feed Guide Disc	2
16	5600 1086	Spacer - 10.2×20	2
17	5506 4169	Rubber Roller - Paper Feed	4
18	5507 6010	Separator Roller Ass'y	1
19	5507 6035	Timing Belt - 162XL	1
20	5507 6032	Timing Belt Pulley - 30T	2
21	C200 5130	Upper Shaft - Separation Pressure	1
22	5053 0419	Bushing - 10mm	1
23	C203 5043	Pick-up Roller Shaft	1
24	5507 6038	Torque Limitter - Paper Feed Roller	1
25	5507 6015	Paper Feed Roller	1
26	5600 1107	Snap Retainer - 12	1
27	C203 5045	Bushing - 18×24×28mm	1
28	C203 5051	Arm Stopper	1

Index No.	Part No.	Description	Q'ty Per Assembly
100	0720 0040Z	Retaining Ring - M4	
101	0951 3005Z	Philips Pan Head Screw - M3×5	
102	0594 0080E	Bolt - M4×8	
103	0701 0040Z	Flat Washer - M4	
104	0713 0040B	Hexagon Nut - M4	
105	0720 0050Z	Retaining Ring - M5	
106	0574 0040E	Hexagon Headless Set Screw - M4×4	
107	0314 0080Z	Philips Pan Head Screw - M4×8	
108	0720 0030Z	Retaining Ring - M3	
109	0594 0080Z	Bolt - M4×8	
110	0951 3006Z	Philips Screw With Flat Washer - M3×6	
111	0804 4055	Pin	
112	0805 3263	Bearing - 6×10×6mm	
113	0554 0040E	Allen Screw - M4×4	
114	0574 0080E	Hexagon Headless Set Screw - M4×8	
115	1403 0539	Photo Interruptor - EE-SX450-P1	
116	0314 0120Z	Philips Pan Head Screw - M4×12	

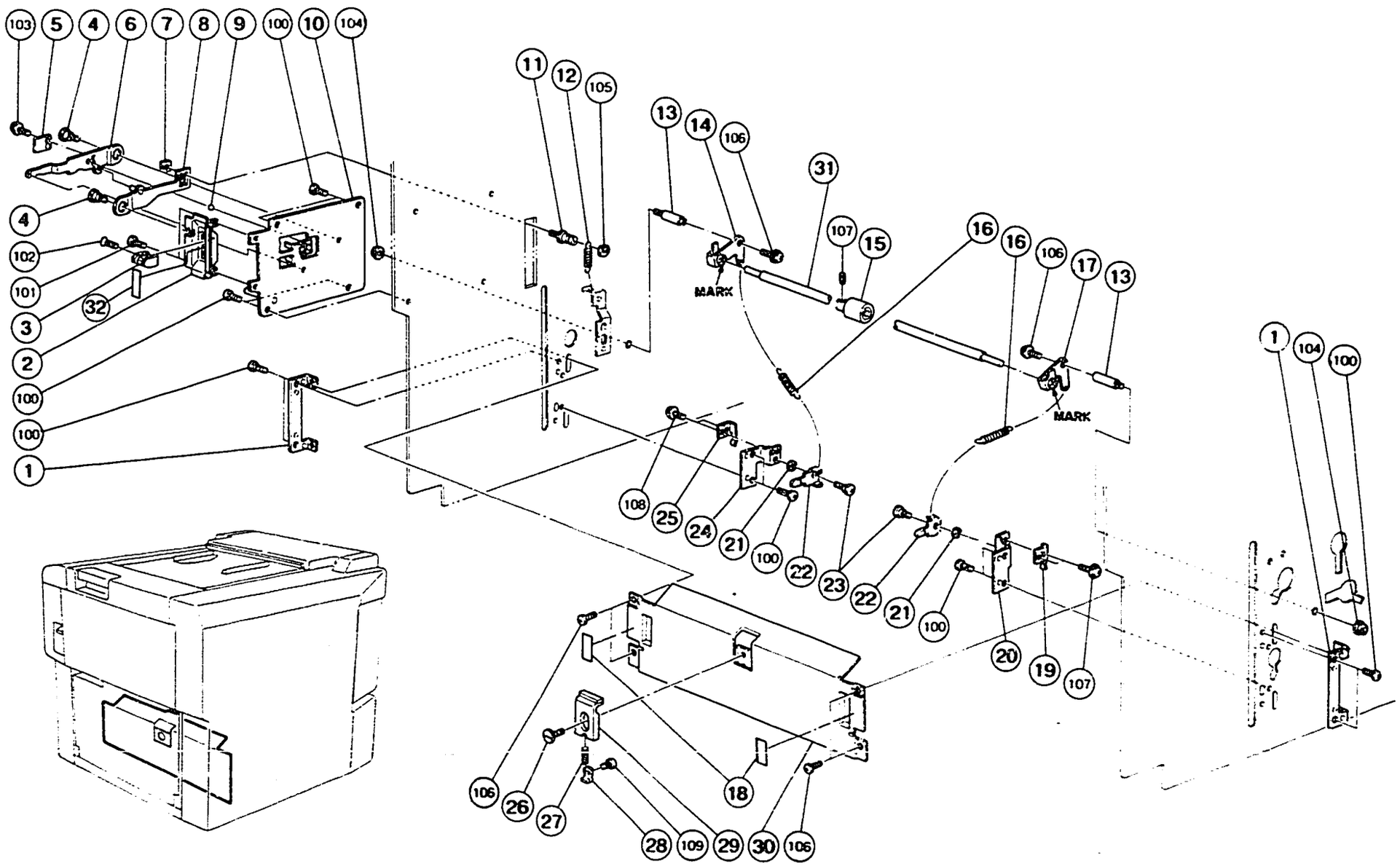
103
5
4
6
7
8
9
100
10
104
11
12
105
13
14
106
31
107
15
16
16
106
17
13
MARK
MARK
4
102
101
3
32
2
100
100
1
1
104
100
108
25
24
21
100
22
23
22
21
100
20
19
107
106
26
27
28
109
29
30
106
18

8. PAPER SEPARATION ROLLER

Index No.	Part No.	Description	Q'ty Per Assembly
1	C201 5075	Guide Plate Bracket	2
2	C203 2708	Lever Bracket	1
3	C201 2425	Adjusting Lever	1
4	C203 5010	Lever Shaft	2
5	5501 8180	Flat Spring - Feed Roller Pressure	1
6	C203 5007	Paper Feed Lever	1
7	5506 4235	Plate Nut - Paper Pressure	1
8	C203 5013	Lever Supporter	1
9	5501 8195	Steel Ball 3/16,	1
10	C203 2026	Lever Bracket - Paper Feed	1
11	C203 5017	Spring Stud	1
12	C203 5020	Spring - Feed Roller Pressure	1
13	C201 5090	Separation Roller Pressure Stud	2
14	C203 5062	Left Arm - Separation	1
15	5507 6018	Lower Separator Roller	1
16	C201 5080	Separation Pressure Spring	2
17	C203 5066	Right Arm - Separation	1
18	C203 2728	Decal - Paper Separator	2
19	C201 5086	Spring Plate - Right	1
20	C201 5084	Right Bracket - Separation Pressure	1
21	C201 5089	Washer - M6	2
22	C201 5088	Separation Pressure Lever	2
23	5507 4823	Shoulder Screw - M4	2
24	C201 5083	Left Bracket - Separation Pressure	1
25	C201 5082	Spring Plate - Left	1
26	5507 6060	Guide Screw - Front Plate	1
27	C200 5106	Paper Feed Pressure Spring	1
28	5507 6058	Spring Hook - Separator Pressure	1
29	5507 6055	Front Guide Plate	1
30	C203 5086	Guide Plate	1
31	C201 5077	Lower Separation Roller Ass'y	1
32	C203 2737	Paper Feed Decal	1

Index No.	Part No.	Description	Q'ty Per Assembly
100	0314 0080Z	Philips Pan Head Screw - M4×8	
101	0801 1004	Screw - M4×4	
102	0323 0100Z	Philips Sunken Head Screw - M3×10	
103	0951 3006Z	Philips Screw With Flat Washer - M3×6	
104	0713 0040B	Hexagon Nut - M4	
105	0720 0040Z	Retaining Ring - M4	
106	0951 4008Z	Philips Screw With Flat Washer - M4×8	
107	0574 0040E	Hexagon Headless Set Screw - M4×4	
108	0951 3005Z	Philips Pan Head Screw - M3×5	
109	0801 1135	Philips Pan Head Screw - M3×3	

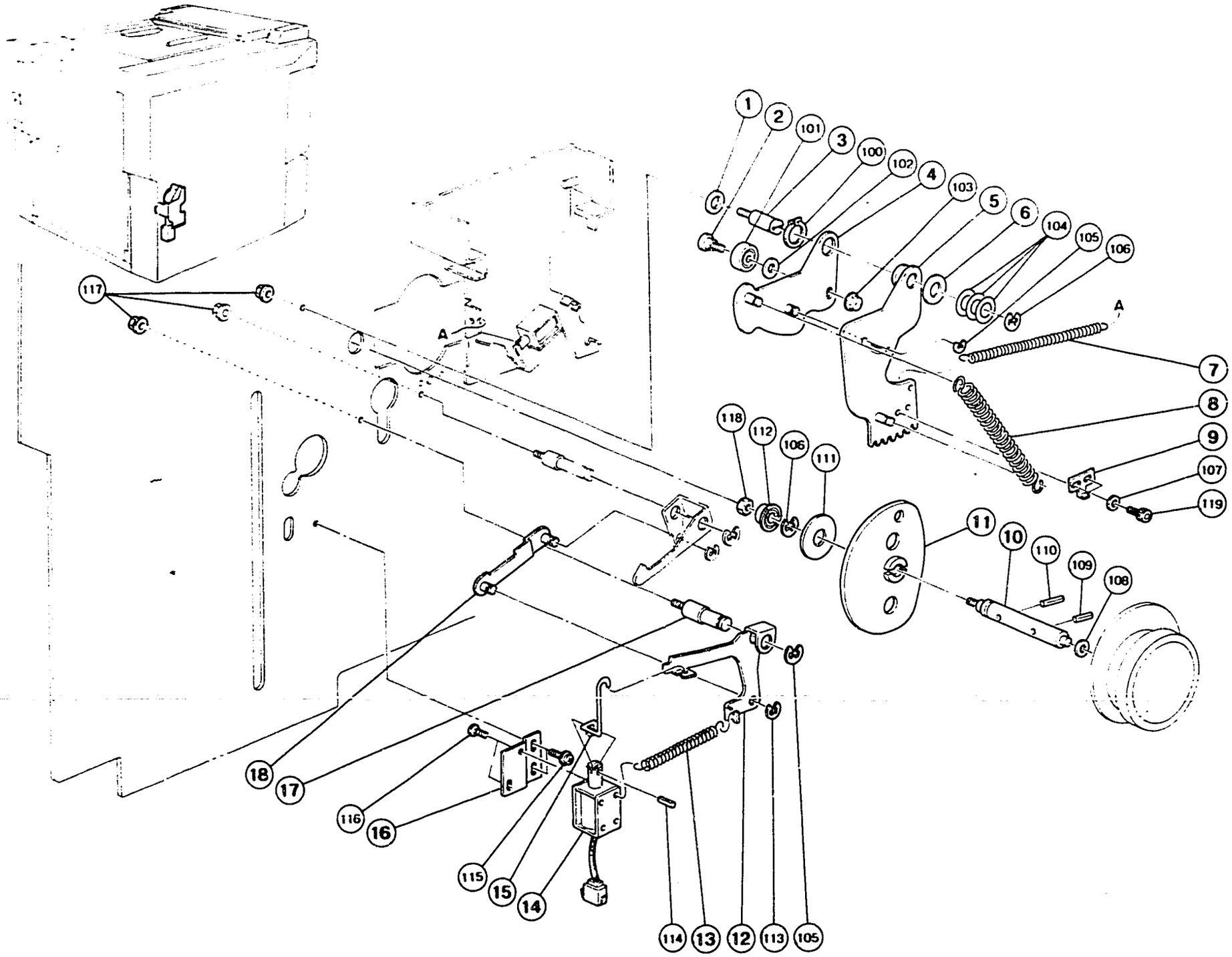
1
2
101
3
100
102
4
103
5
6
104
105
106
A
7
8
9
107
119
11
10
110
109
108
118
112
106
111
117
A
18
17
116
16
115
15
14
114
13
12
113
105

9. PAPER FEED DRIVE

Index No.	Part No.	Description	Q'ty Per Assembly
1	5501 5929	Spacer - 5.2mm×16mm×1mm	1
2	C203 5194	Shoulder Screw - M4	1
3	C200 5207	Sector Gear Stud	1
4	C200 5190	Paper Feed Sector Cam	1
5	C203 5175	Sector Gear	1
6	5600 1086	Spacer - 10.2×20	1
7	C200 5222	Sector Spring	1
8	C200 5205	Paper Feed Spring	1
9	C203 5180	Sector Gear Stopper	1
10	C201 2228	Feed Cam Shaft	1
11	C201 5110	Paper Feed Cam	1
12	C200 5238	Sector Stopper - Feed Roller	1
13	C200 5235	Paper Feed Solenoid Spring	1
14	C200 8432	Paper Feed Solenoid	1
15	C200 5226	Link - Paper Feed Solenoid	1
16	C200 5225	Bracket - Paper Feed Solenoid	1
17	C203 2073	Stopper Stud - Paper Feed	1
18	C201 5101	Link	1

Index No.	Part No.	Description	Q'ty Per Assembly
100	0725 0220Z	Retaining Ring - M22	
101	0740 3007	Ball Bearing - 7×19×6mm	
102	0807 5004	Washer	
103	0713 0040B	Hexagon Nut - M4	
104	0807 7018	Washer - M10	
105	0720 0060Z	Retaining Ring - M6	
106	0720 0080Z	Retaining Ring - M8	
107	0701 0040Z	Flat Washer - M4	
108	0807 7013	Spacer - 10.2×14×0.2mm	
109	0624 0160E	Spring Pin - 4×16mm	
110	0804 4048	Spring Pin - 4×20	
111	0807 7055	Holder - Main Shaft	
112	0741 3807	Bearing	
113	0720 0040Z	Retaining Ring - M4	
114	0623 0100E	Spring Pin - 3×10mm	
115	0951 4006Z	Philips Screw With Flat Washer - M4×6	
116	0313 0040Z	Philips Pan Head Screw - M3×4	
117	0713 0050B	Hexagon Nut - M5	
118	0712 0060Z	Hexagon Nut - M6	
119	0594 0060E	Socket Screw - M4×6	

10. 2ND FEED ROLLER

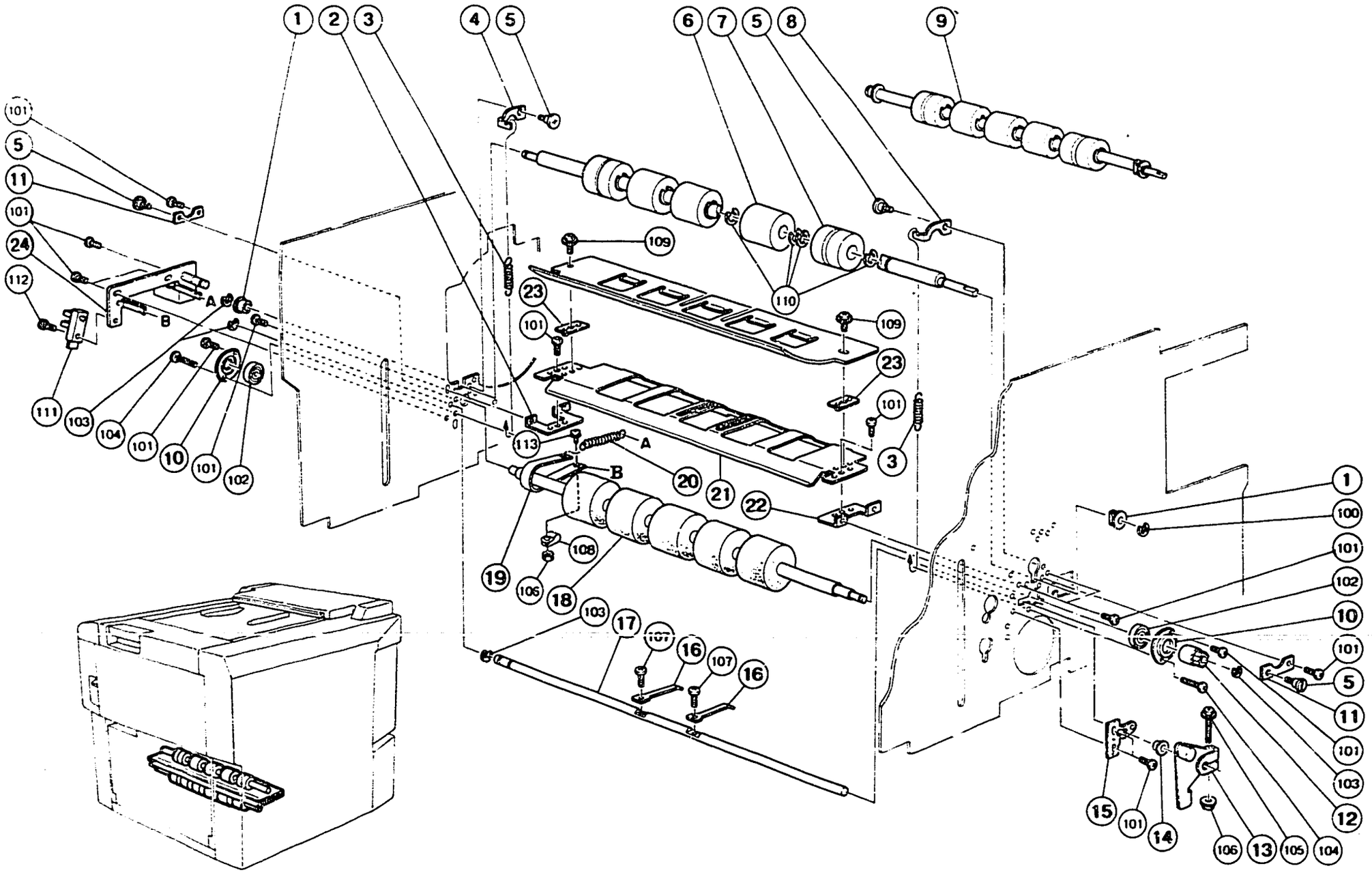

10. 2ND FEED ROLLER

Index No.	Part No.	Description	Q'ty Per Assembly
1	C200 5150	Bushing - 7×18×9mm	2
2	C200 5137	Left Bracket - Guide Plate	1
3	5505 6528	Spring - Press Roller	2
4	C200 5154	Left Spring Arm	1
5	C201 5125	Shoulder Screw - M4	4
6	C200 5148	Upper Feed Second Roller	3
7	C200 5340	Upper Feed Roller	2
8	C200 5155	Right Spring Arm	1
9	C201 5138	Upper Second Feed Roller Ass'y	1
10	C201 5134	Bearing Holder	2
11	C200 5153	Bushing Supporter	2
12	C201 5130	Gear - 14T	1
13	C203 5515	Paper Detecting Arm	1
14	5600 1080	Bush - Paper Feed Roller - Left	1
15	C201 5505	Height Sensor Bracket	1
16	C200 5504	Paper Detecting Pin	2
17	C200 5503	Paper Detecting Shaft	1
18	C201 5136	Lower Second Feed Roller	1
19	5606 2213	Lower Second Feed Roller Brake	1
20	5501 8328	Spring - Feed Roller Brake	1
21	C201 5124	Lower Guide Plate	1
22	C200 5138	Right Bracket - Guide Plate	1
23	C200 5135	Guide Plate Spacer	2
24	C203 2034	Counter Sensor Shaft	1

Index No.	Part No.	Description	Q'ty Per Assembly
100	0720 0060Z	Retaining Ring - M6	
101	0314 0080Z	Philips Pan Head Screw - M4×8	
102	0740 3010	Ball Bearing - 10×26×8mm	
103	0720 0050Z	Retaining Ring - M5	
104	0314 0200Z	Philips Pan Head Screw - M4×20	
105	0804 6090	Hexagon Bolt - M4	
106	0713 0040B	Hexagon Nut - M4	
107	0313 0050Z	Philips Pan Head Screw - M3×5	
108	1105 0010	Nylon Clip - 6N	
109	0951 4006Z	Philips Screw With Flat Washer - M4×6	
110	0805 0084	Retaining Ring	
111	1403 0539	Photo Interruptor - EE-SX450-P1	
112	0314 0100Z	Philips Pan Head Screw - M4×10	
113	0951 4010Z	Philips Screw With Flat Washer - M4×10	

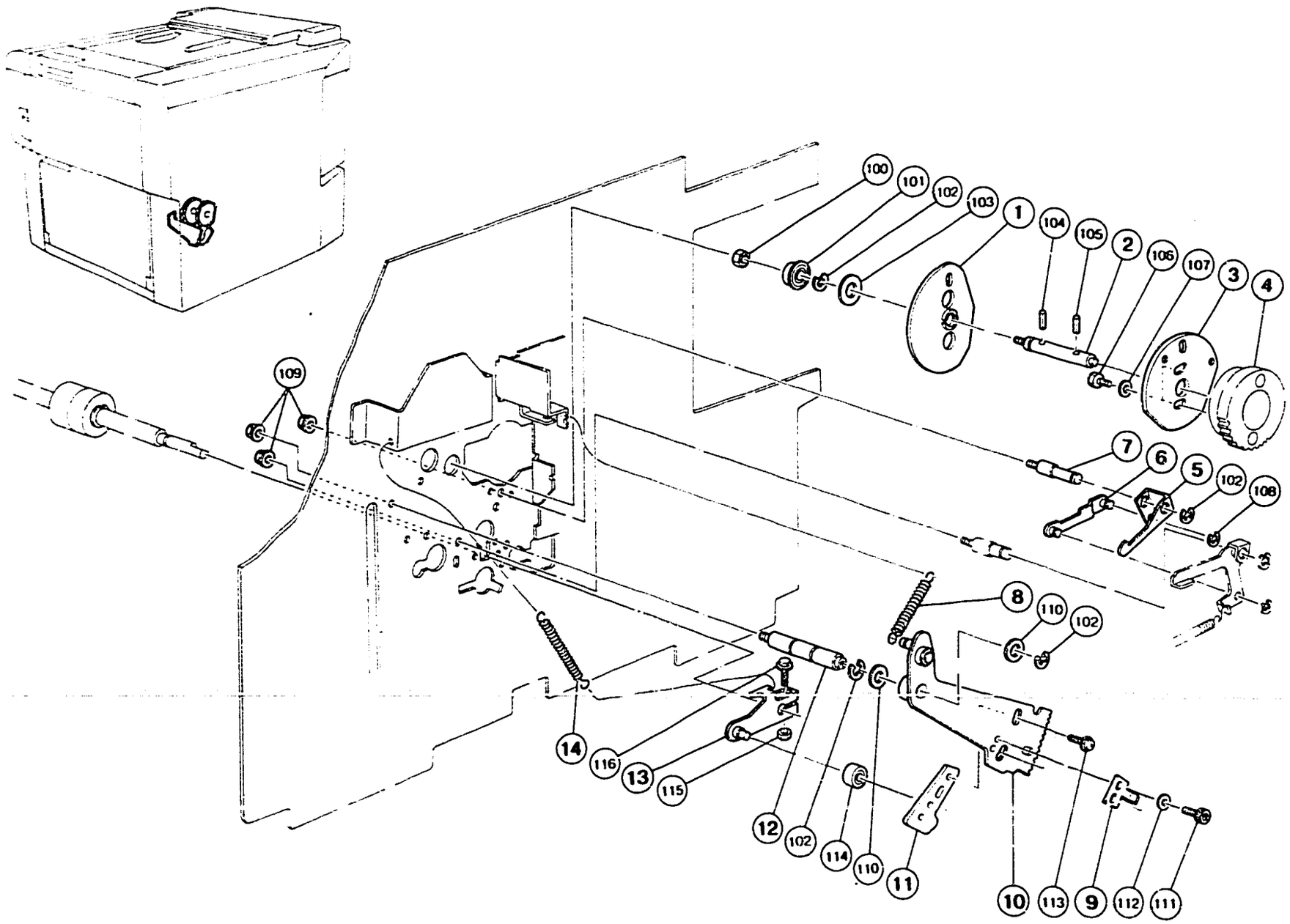
100
101
102
103
1
104
105
2
106
107
3
4
109
7
6
5
102
108
8
110
102
14
116
13
115
12
102
114
110
11
10
113
9
112
111

11. 2ND FEED DRIVE

Index No.	Part No.	Description	Q'ty Per Assembly
1	C201 5110	Paper Feed Cam	1
2	C201 2228	Feed Cam Shaft	1
3	C200 5250	Second Feed Roller Cam	1
4	C201 2229	Gear - 50T	1
5	C200 5239	Feed Sector Stopper	1
6	C201 5101	Link	1
7	C203 2075	Feed Gear Stopper Shaft	1
8	C200 5222	Sector Spring	1
9	C203 5191	Sector Gear Stopper	1
10	C203 5184	Sector Gear	1
11	C200 5223	Lift Cam	1
12	C203 2072	Feed Cam Shaft	1
13	C201 5142	Lift Arm - Feed Roller	1
14	C201 5145	Lift Arm Spring	1

Index No.	Part No.	Description	Q'ty Per Assembly
100	0712 0060Z	Hexagon Nut - M6	
101	0741 3807S	Bearing	
102	0720 0080Z	Retaining Ring - M8	
103	0807 7055	Holder - Main Shaft	
104	0804 4048	Spring Pin - 4×20	
105	0624 0160E	Spring Pin - 4×16mm	
106	0585 0100Z	Bolt - M5×10	
107	0701 0050Z	Flat Washer - M5	
108	0720 0040Z	Retaining Ring - M4	
109	0713 0050B	Hexagon Nut - M5	
110	0807 7018	Washer - M10	
111	0594 0060E	Socket Screw - M4×6	
112	0701 0040Z	Flat Washer - M4	
113	0951 5010Z	Philips Screw With Flat - Washer - M5X	
114	0740 3808	Bearing - 8×16×5mm	
115	0713 0040B	Hexagon Nut - M4	
116	0804 6090	Hexagon Bolt - M4	

12. PRESS ROLLER

September 15, '88

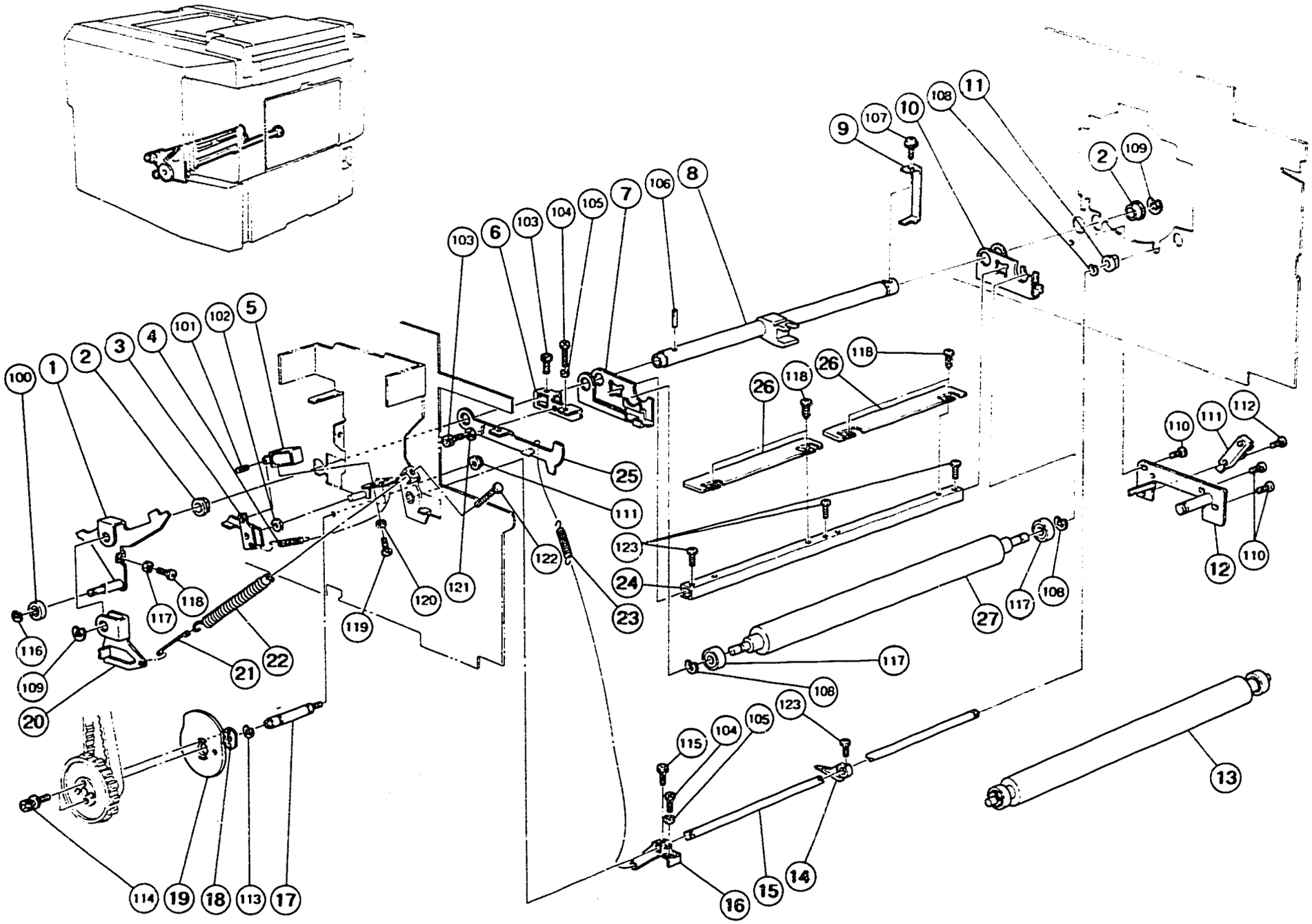

12. PRESS ROLLER

Index No.	Part No.	Description	Q'ty Per Assembly
1	C200 5566	Pressure ON/OFF Lever	1
2	C200 5526	Print Pressure Bushing	2
3	C200 5565	Print Pressure Stopper	1
4	5501 7559	Spring - Master Feed	1
5	C200 8432	Paper Feed Solenoid	1
6	C200 6002	Adjusting Arm	1
7	C200 5553	Right Arm - Print Pressure	1
8	C203 5505	Print Pressure Shaft	1
9	C203 5507	Shielding Plate	1
10	C200 5552	Left Arm - Print Pressure	1
11	5053 0223	Bushing - 8mm	1
12	C203 2034	Counter Sensor Shaft	1
13	C203 5509	Press Roller Ass'y	1
14	C200 6008	Exit Pawl	1
15	C203 6003	Pawl Shaft	1
16	C200 6004	Exit Pawl Lever	1
17	C200 2225	Pressure Cam Shaft	1
18	C200 2224	Plate Nut - Print Pressure Cam	1
19	C200 5560	Print Pressure Cam	1
20	C200 5541	Print Pressure Arm	1
21	C200 5543	Pressure Spring Link	1
22	5607 3261	Print Pressure Spring	1
23	5607 2814	Roller Spring	1
24	C201 5550	Printing Pressure Stay	1
25	C203 6004	Pawl Cam	1
26	C200 5557	Rear Guide Plate	2
27	C201 5555	Press Roller	1

Index No.	Part No.	Description	Q'ty Per Assembly
100	0740 3206	Ball Bearing	
101	0623 0100E	Spring Pin - 3x10mm	
102	0700 0060G	Flat Washer - M6	
103	0594 0060E	Socket Screw - M4x6	
104	0584 0121Z	Hexagon Bolt - M4x12	
105	0710 0040Z	Hexagon Nut - M4	
106	0624 0220E	Spring Pin - 4x22mm	
107	0951 4008Z	Philips Screw With Flat Washer - M4x8	
108	0720 0060Z	Retaining Ring - M6	
109	0720 0120Z	Retaining Ring - M12	
110	0314 0080Z	Philips Pan Head Screw - M4x8	
111	0713 0050B	Hexagon Nut - M5	
112	0314 0100Z	Philips Pan Head Screw - M4x10	
113	0720 0100Z	Retaining Ring - M10	
114	0804 6092	Hexagonal Set Screw	
115	0593 0080E	Bolt - M3x8	
116	0720 0040Z	Retaining Ring - M4	
117	0740 3007	Ball Bearing - 7x19x6mm	
118	0433 0080Z	Tapping Screw - M3x8	
119	0583 0060Z	Hexagon Bolt - M3x6mm	
120	0701 0030Z	Flat Washer - M3	
121	0701 0040Z	Flat Washer - M4	
122	0586 0451Z	Hexagon Bolt - M6x45	
123	0313 0060Z	Philips Pan Head Screw - M3x6	

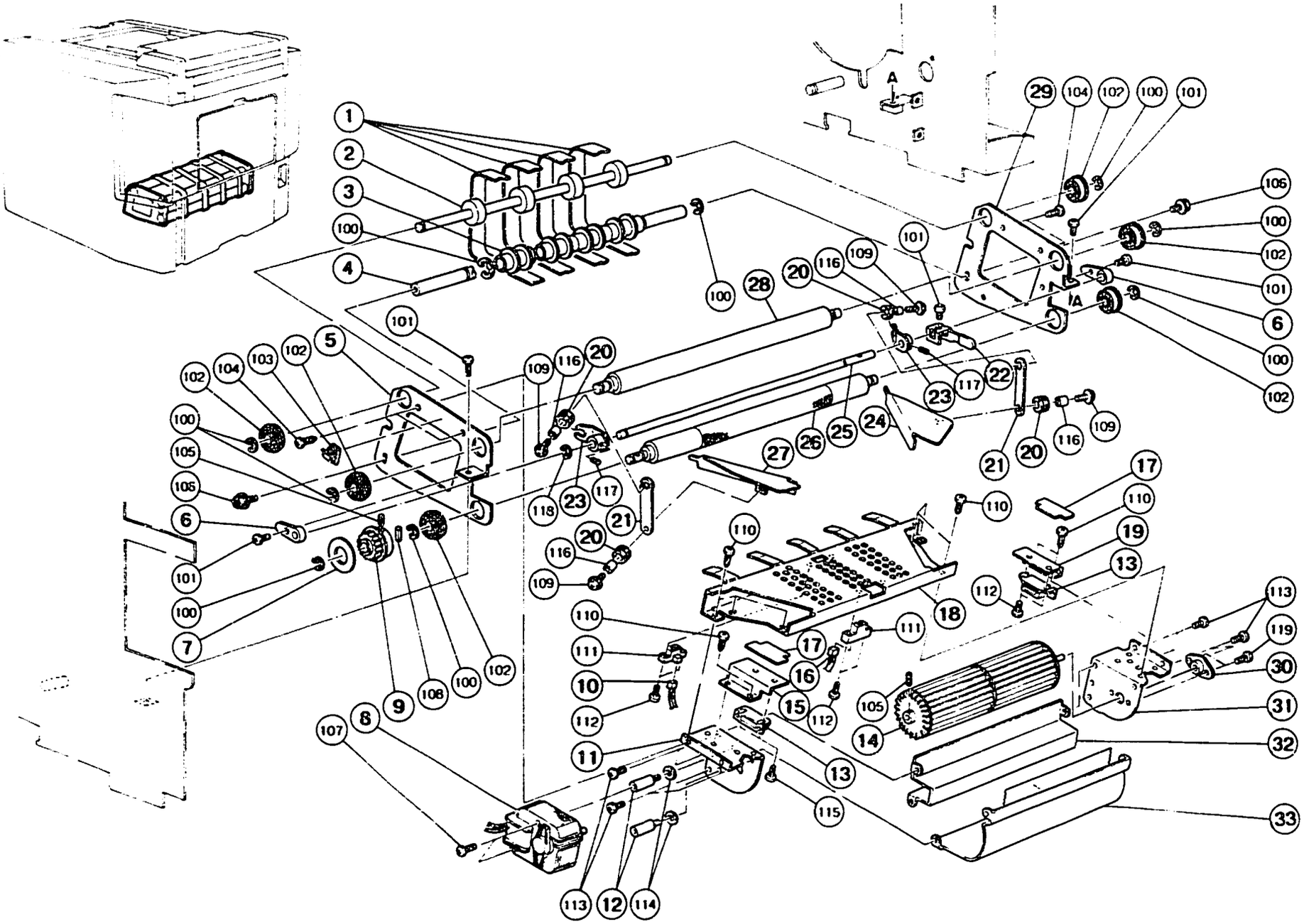
1
2
3
100
4
101
5
102
104
103
105
6
7
8
9
106
107
108
109
116
20
23
117
118
21
110
10
111
112
11
113
12
114
115
13
14
15
16
17
18
19
22
24
25
26
27
28
29
30
31
32
33
A

13. PAPER DELIVERY I

Index No.	Part No.	Description	Q'ty Per Assembly
*	C203 1032	Paper Delivery Ass'y	1
1	C200 6097	Transport Belt	4
2	C200 6092	Front Roller - Transport Belt	1
3	C200 6096	Idler Roller - Transport Belt	4
4	C200 6095	Idler Shaft	1
5	C203 6018	Right Side Plate - Vacuum Unit	1
6	C203 6051	Bushing - M8	2
7	C203 6065	Pulley Flange	1
8	C200 8410	Motor - AC5W	1
9	C201 6080	Pulley - 16T	1
10	C201 8132	Paper Wrap Harness	1
11	C203 6017	Right Brower Plate	1
12	5506 5679	Stud - Ink Supply - Cover	2
13	5054 0536	Magnet Catch Ass'y	2
14	C200 6085	Vacuum Fan	1
15	C203 6037	Magnet Support Plate - Right	1
16	C200 8498	Paper Exit Harness	1
17	C203 6035	Magnet Plate	2
18	C203 6020	Vacuum Guide Plate	1
19	C203 6034	Magnet Support Plate - Left	1
20	C203 6047	Rubber Washer	4
21	C203 6046	Link - Wing	2
22	C203 6052	Wing Lever	1
23	C203 6043	Arm - Wing	2
24	C203 6025	Left Wing	1
25	C203 6050	Wing Shaft	1
26	C200 6091	Drive Roller	1
27	C203 6028	Right Wing	1
28	C200 6093	Driven Roller	1
29	C203 6014	Left Side Plate - Vacuum Unit	1
30	C201 6072	Fan Shaft Bushing	1
31	C203 6016	Left Brower Plate	1
32	C203 6031	Front Fan Plate	1
33	C201 6076	Rear Fan Plate	1

Index No.	Part No.	Description	Q'ty Per Assembly
100	0720 0080Z	Retaining Ring - M8	
101	0314 0080Z	Philips Pan Head Screw - M4×8	
102	0742 1910	Bearing - 10×22mm	
103	1105 0172	Clamp	
104	0434 0080Z	Tapping Screw - M4×8	
105	0554 0040E	Allen Screw - M4×4	
106	0804 6093	Hexagonal Set Screw - M4×10	
107	0314 0350Z	Philips Pan Head Screw - M4×35	
108	0623 0160E	Spring Pin - 3×16mm	
109	0951 3008Z	Philips Screw With Flat Washer - M3×8	
110	0433 0060W	Tapping Screw - M3×6	
111	1403 0456	Photo Sensor	
112	0313 0100Z	Philips Pan Head Screw - M3×10	
113	0313 0050W	Philips Pan Head Screw - M3×5	
114	0807 3083	Washer	
115	0313 0040Z	Philips Pan Head Screw - M3×4	
116	0707 3050B	Bushing - 3×5mm	
117	0574 0050E	Hexagon Headless Set Screw - M4×5	
118	0720 0060Z	Retaining Ring - M6	
119	0313 0080Z	Philips Pan Head Screw - M3×8	

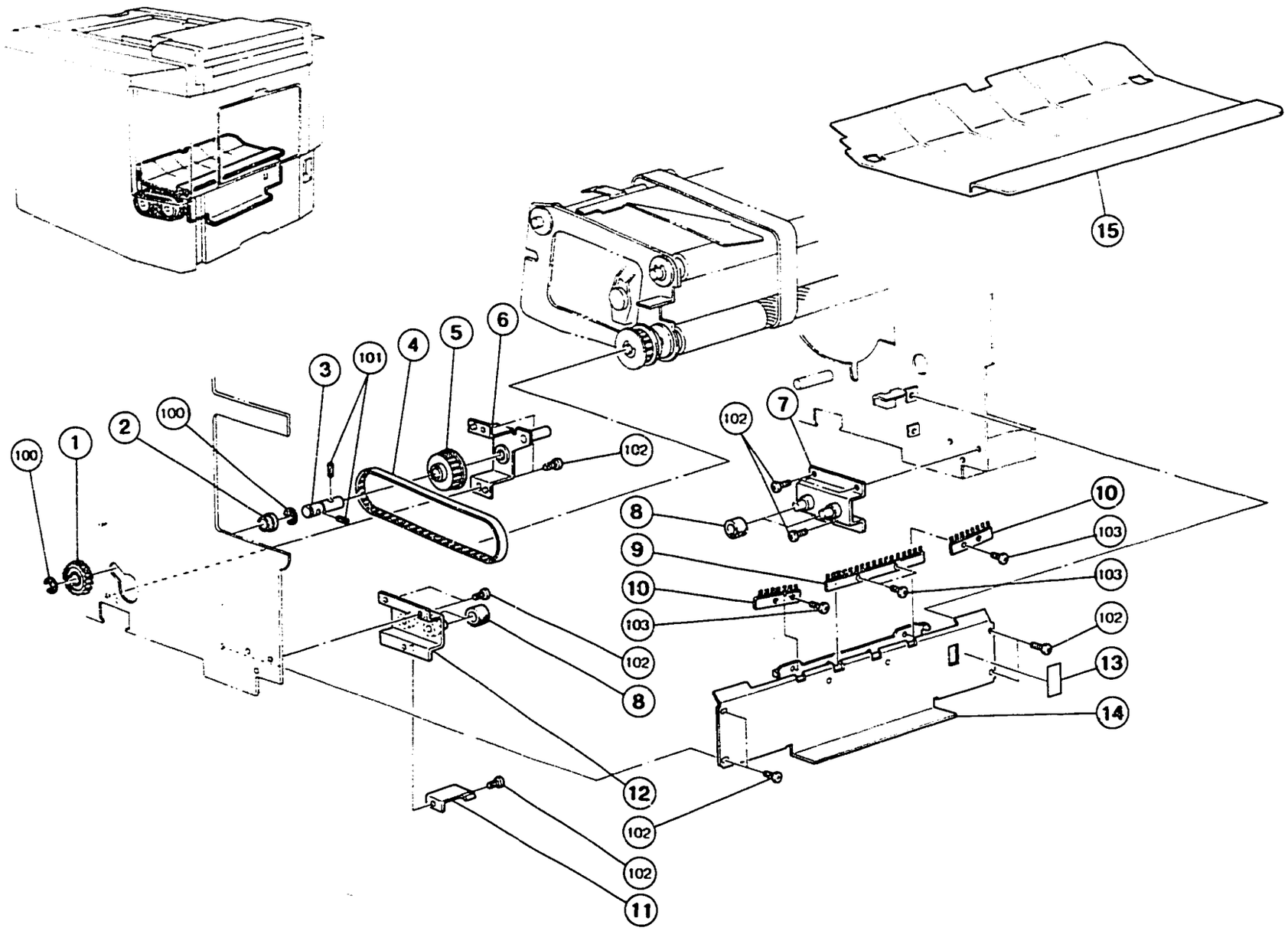
15
6
5
4
101
3
100
2
1
100
102
7
102
10
103
8
9
10
103
103
102
102
13
8
14
12
102
102
11

14. PAPER DELIVERY II

September 15, '88

Index No.	Part No.	Description	Q'ty Per Assembly
1	C200 6058	Gear - 28T	1
2	5070 0719	Bearing - Shaft - Drive - Fitting	1
3	C203 6064	Idol Shaft	1
4	C203 6067	Timing Belt - 170XL	1
5	C200 6059	Pulley - 25T	1
6	C203 6060	Bacuum Drive Bracket	1
7	C203 6070	Left Bracket	1
8	C203 6076	Slider Roller	4
9	C200 6135	Antistatic Brush	1
10	C203 6085	2nd Antistatic Brush	2
11	C203 6077	Leaf Spring	1
12	C203 6073	Right Bracket	1
13	C203 2729	Paper Exit Decal	1
14	C203 6081	Paper Delivery Plate	1
15	C200 6201	Shelter Plate	1

Index No.	Part No.	Description	Q'ty Per Assembly
100	0720 0080Z	Retaining Ring - M8	
101	0623 0180E	Spring Pin - 3x18mm	
102	0314 0080Z	Philips Pan Head Screw - M4x8	
103	0313 0040Z	Philips Pan Head Screw - M3x4	

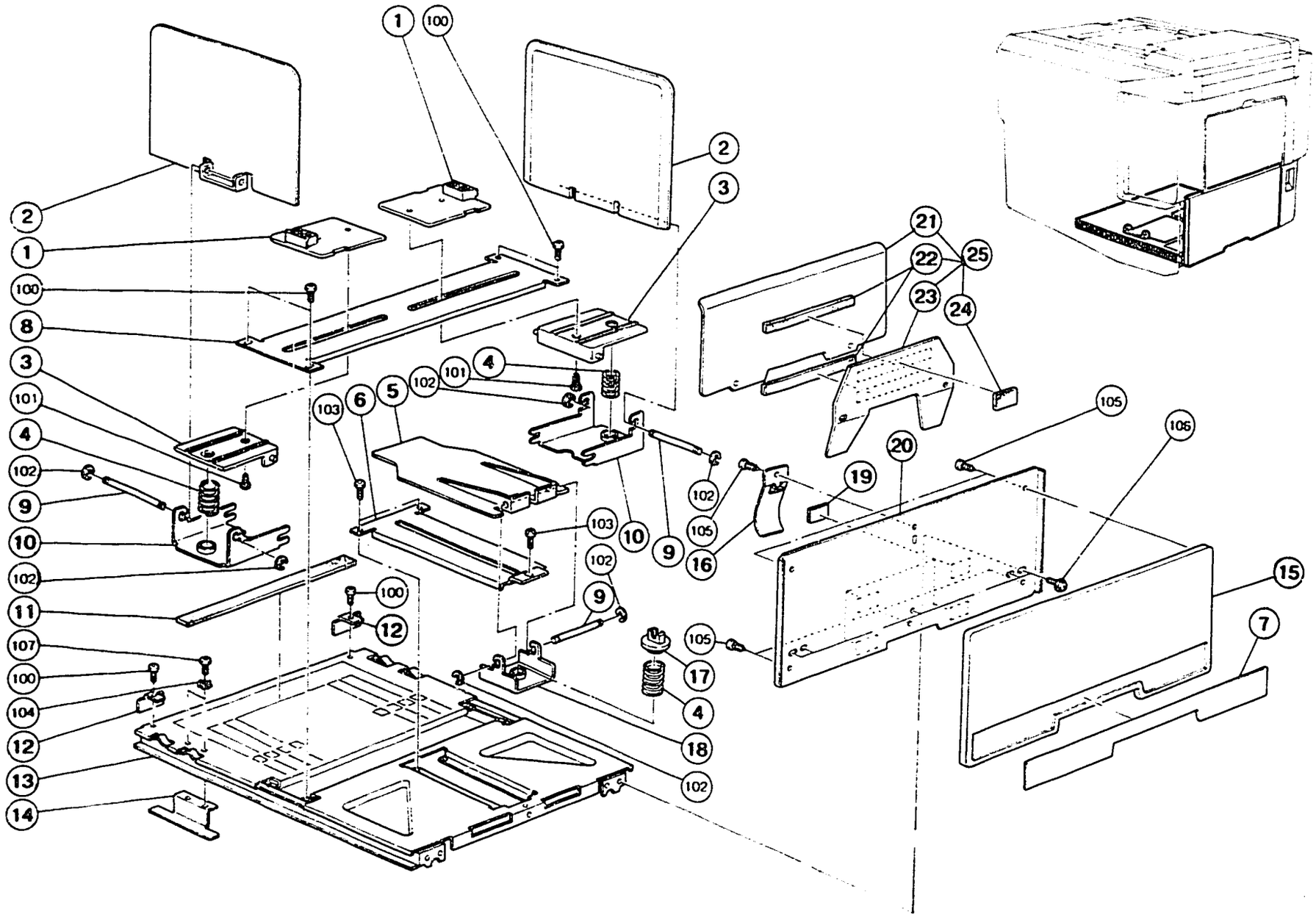
1
100
2
3
21
22
25
23
24
2
1
100
8
3
101
4
102
9
10
102
11
107
100
104
12
13
14
101
4
6
5
103
102
105
106
20
19
102
105
16
9
10
103
102
9
100
12
105
17
4
18
102
15
7

15. DELIVERY TABLE

Index No.	Part No.	Description	Q'ty Per Assembly
*	C203 6164	Delivery Table Unit	1
1	C203 6123	Guide Slider	2
2	C203 6118	Left Guide Plate	2
3	C203 6122	Guide Plate Slider	2
4	C203 6125	Guide Plate Spring	3
5	C203 6131	Support End Fence	1
6	C203 6129	End Fence Support Rail	1
7	C201 2447	Paper Delivery Cover Sheet	1
8	C203 6115	Guide Plate Rail	1
9	C203 6132	End Fence Support Shaft	3
10	C203 6124	Guide Plate Bracket	2
11	C203 6139	Sponge Seal - 4x12x200	1
12	C203 6078	Delivery Table Stopper	2
13	C203 6165	Delivery Table	1
14	C203 6138	Antistatic Bracket	1
15	C201 2445	Paper Delivery Cover	1
16	C203 6147	Leaf Spring	1
17	C203 6134	End Fence/Support Slider	1
18	C203 6135	Support Bracket	1
19	C203 6145	Rubben Seal - 2x20x30	5
20	C203 6143	Delivery Table Fence	1
21	C203 6151	End Fence	1
22	C201 6115	Fence Sponge	2
23	C203 6152	Fence/Supporter	1
24	5505 4189	Felt Side Plate	1
25	C203 6150	End Fence Ass'y	1

Index No.	Part No.	Description	Q'ty Per Assembly
100	0314 0080Z	Philips Pan Head Screw - M4x8	
101	0433 0082Z	Tapping Screw - M3x8	
102	0720 0030Z	Retaining Ring - M3	
103	0313 0060Z	Philips Pan Head Screw - M3x6	
104	0704 0030W	Toothed Washer - M3	
105	0433 0062W	Hexagon Head Tapping Screw - M3x6	
106	0951 4008Z	Philips Screw With Flat Washer - M4x8	
107	0313 0060W	Philips Pan Head Screw - M3x6	

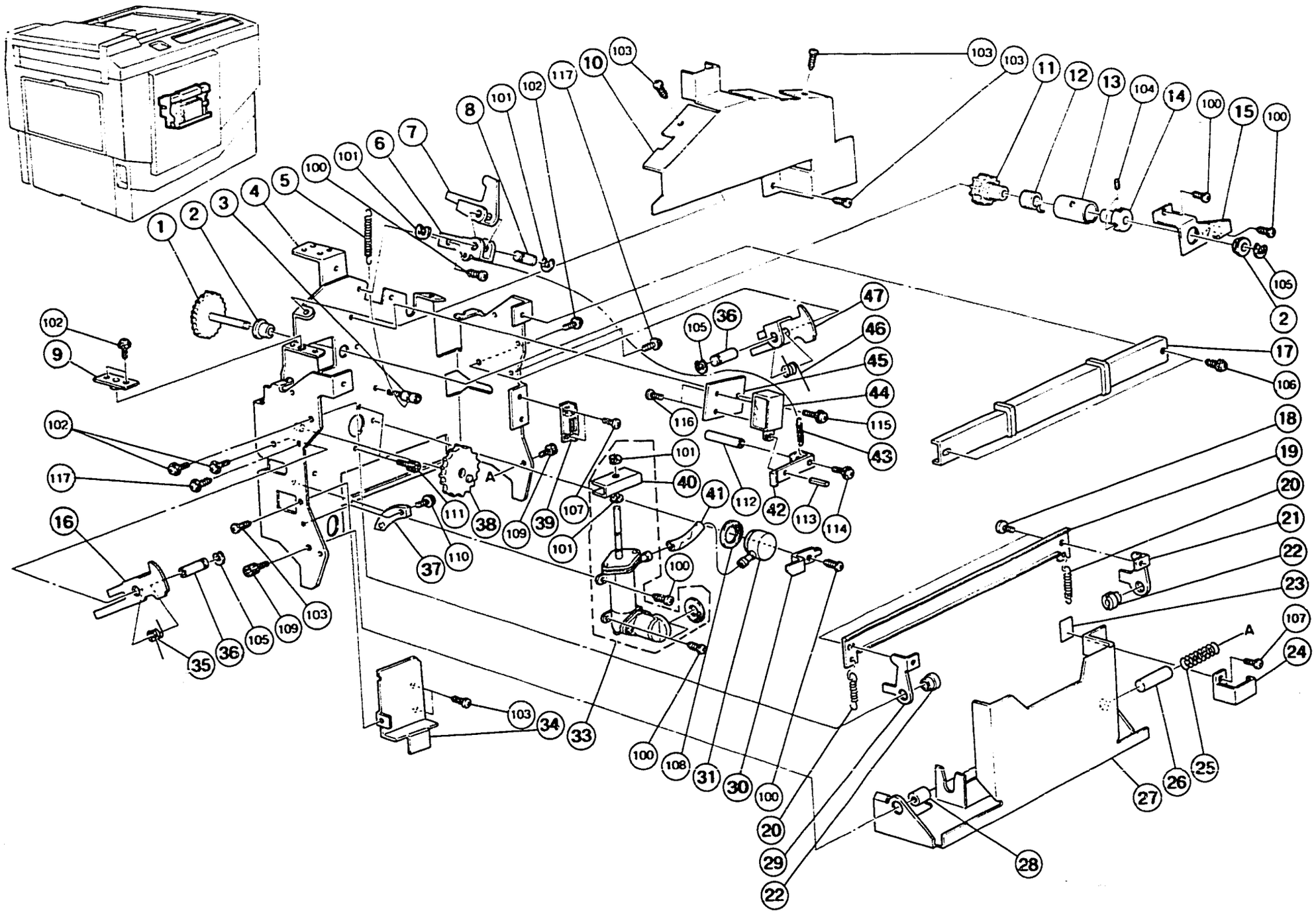
1
2
3
4
5
6
7
8
9
10
11
12
13
14
15
16
17
18
19
20
21
22
23
24
25
26
27
28
29
30
31
33
34
35
36
37
38
39
40
41
42
43
44
45
46
47
100
101
102
103
104
105
106
107
108
109
110
111
112
113
114
115
116
117
A

16. DRUM SECTION I

September 15, '88

Index No.	Part No.	Description	Q'ty Per Assembly
1	C200 4852	Gear - 50T	1
2	5507 6624	Bushing - 8x16x45mm	2
3	5413 2266	Spring Anchor	1
4	C201 4621	Drum Side Plate	1
5	C200 4914	Drum Stopper Spring	1
6	C200 4912	Drum Stopper Bracket	1
7	C203 4532	Drum Stopper	1
8	C200 4913	Drum Stopper Shaft	1
9	C200 4814	Bushing - 6x10x55mm	1
10	C200 4622	Side Plate Cover - Drum	1
11	C201 4674	Gear - 25T	1
12	C201 4676	Clutch Spring	1
13	C200 4861	Pump Clutch Sleeve	1
14	C201 4067	Plimp Clutch Collar	1
15	C201 4677	Clutch Bracket	1
16	C200 4631	Left Arm - Drum Lock	1
17	C201 4636	Drum Unit Handle	1
18	5400 3404	Stepped Screw	2
19	C200 4639	Release Lever - Drum Lock	1
20	C200 4640	Stopper Spring - Drum Lock	2
21	C200 4637	Right Stopper - Drum Lock	1
22	C200 4638	Drum Lock Shaft - Small	2
23	C200 4928	Seal - 0.5x14x9	1
24	C201 4639	Ink Holder Handle	1
25	C201 4682	Ink Cartridge Spring	1
26	C200 4924	Right Shaft - Ink Holder	1
27	C201 4641	Ink Holder	1
28	C200 4923	Left Shaft - Ink Holder	1
29	C200 4636	Left Stopper - Drum Lock	1
30	C200 4813	Support Plate - Ink Antechamber	1
31	C200 4810	Ink Antechamber	1
33	C201 4670	Platen Roller	1
34	C200 4623	Rear Cover - Drum Side Plate	1
35	C200 4634	Drum Lock Spring - Left	1
36	C200 4633	Drum Lock Shaft - Long	2

Index No.	Part No.	Description	Q'ty Per Assembly
37	C200 4926	Ink Holder Cam	1
38	C200 4867	Gear - 50T	1
39	5054 0536	Magnet Catch Ass'y	1
40	C201 4679	Ink Pump Slider	1
41	C200 4815	Vinyl Tube - M6	1
42	C200 4862	Ink Stopper	1
43	5607 3705	Drive Spring	1
44	C201 8062	Ink Supply Solenoid	1
45	C200 4864	Bracket - Ink Supply Solenoid	1
46	C200 4635	Drum Lock Spring - Right	1
47	C200 4632	Right Arm - Drum Lock	1
100	0434 0080Z	Tapping Screw - M4x8	
101	0720 0050Z	Retaining Ring - M5	
102	0951 4006Z	Philips Screw With Flat Washer - M4x6	
103	0434 0060Z	Tapping Screw - M4x6	
104	0574 0050E	Hexagon Headless Set Screw - M4x5	
105	0720 0060Z	Retaining Ring - M6	
106	0964 4008Z	Tapping Screw W/Flat Washer - M4x8	
107	0314 0060Z	Philips Pan Head Screw - M4x6	
108	0808 0021	Rubber Ring	
109	0595 0080Z	Bolt - M5x8	
110	0951 4010Z	Philips Screw With Flat Washer - M4x10	
111	0594 0080E	Bolt - M4x8	
112	0707 4160B	Bushing - 4x16mm	
113	0623 0080E	Spring Pin - 3x8mm	
114	0951 4020Z	Philips Screw With Flat Washer - M4x20	
115	0960 4006Z	Philips Flange Screw - M4x6	
116	0313 0040Z	Philips Pan Head Screw - M3x4	
117	0434 0100Z	Pan Head Self - Tapping Screw - M4x10	

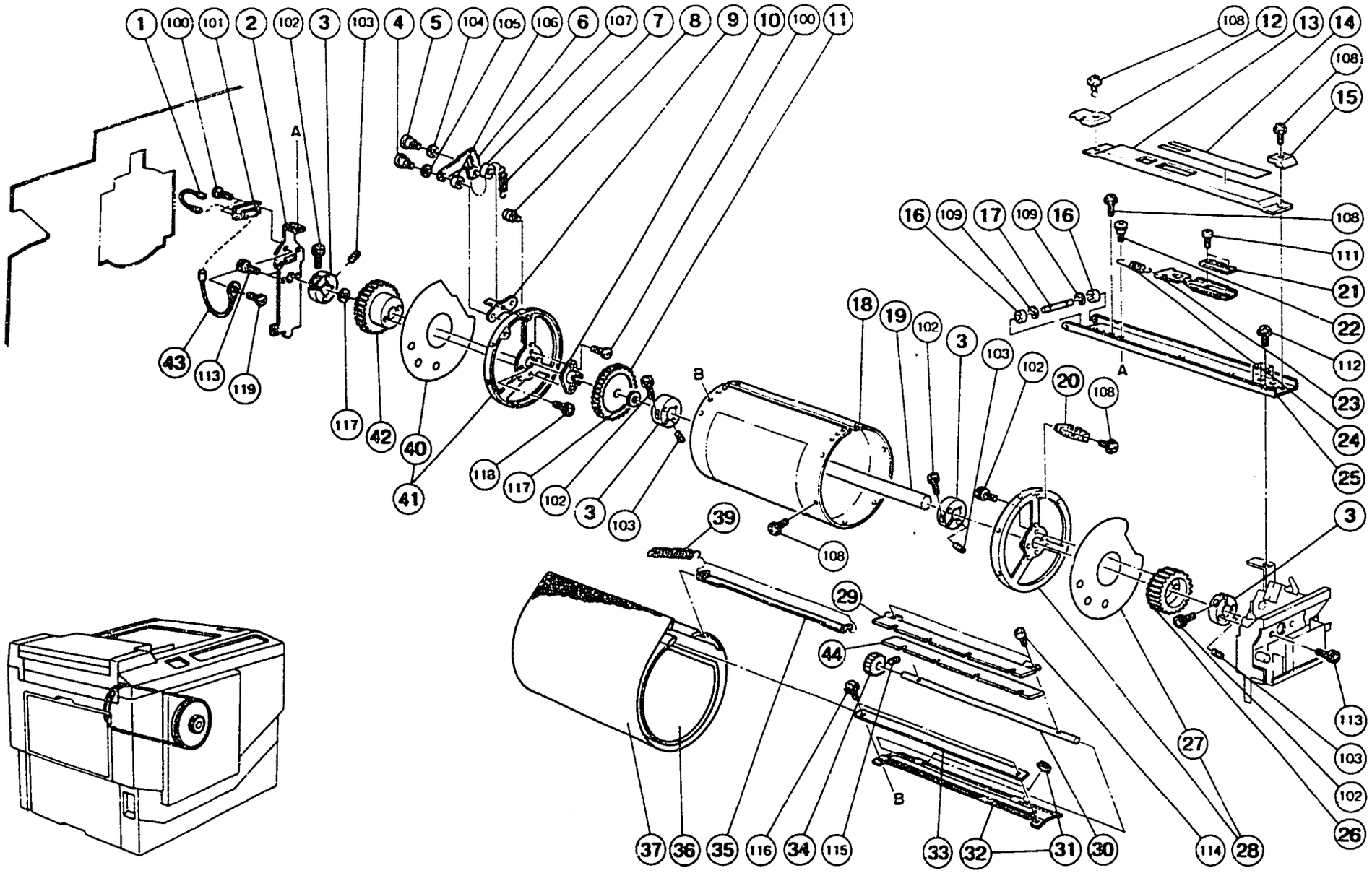
1
100
101
2
102
3
103
4
5
104
105
106
6
107
7
8
9
10
100
11
108
12
13
14
108
15
16
109
17
109
16
108
111
21
22
112
23
24
25
3
18
19
102
3
103
102
20
108
A
A
B
B
43
113
119
117
42
40
41
118
117
102
3
103
39
108
29
44
27
113
103
102
26
37
36
35
116
34
115
33
32
31
30
114
28

17. DRUM SECTION II

Index No.	Part No.	Description	Q'ty Per Assembly
1	C200 8524	Color Drum Harness (Option)	1
2	C200 4613	Rear Side Plate - Drum	1
3	C200 4653	Drum Shaft Bracket	4
4	5506 6069	Step Screw - Etching Middle Roller	1
5	C200 4946	Clamper Sector Shaft	1
6	C200 4944	Sector Gear - 9T	1
7	C200 4945	Sector Gear Spring	1
8	5413 3082	Spring Anchor - Lock Lever	1
9	C201 4686	Interrupter Plate	1
10	C200 4674	Drive Flange - Ink Roller	1
11	C200 4672	Gear - 48T	1
12	C201 4612	Rear Roller Guide	1
13	C201 4613	Drum Rail Cover	1
14	C201 2543	Decal - Drum Caution	1
15	C201 4611	Front Stopper Guide	1
16	C201 4604	Drum Rail Roller	2
17	C200 4627	Drum Rail Shaft	1
18	C201 4690	Metal Screen	1
19	C200 4650	Drum Shaft	1
20	C201 4681	Stopper Plate	1
21	C201 4609	Stopper Releasing Lever	1
22	5506 6111	Step Screw - Stopper - Upper Guide	1
23	C201 4606	Stopper Releasing Plate	1
24	C201 4610	Drum Slider Spring	1
25	C200 4625	Drum Rail	1
26	C200 4673	Gear - 50T	1
27	C200 4678	Front Shieid - Drum Flange	1
28	C201 4648	Front Drum Flange	1
29	C200 4938	Clamper Plate	1
30	C200 4941	Clamper Shaft	1
31	C200 4947	Clamper Rubber	2
32	C203 4526	Drum Clamper Base Ass'y	1
33	C200 4682	Screen Front Plate	1
34	C200 4942	Pinion - 9T	1
35	C200 4683	Screen Rear Plate	1

Index No.	Part No.	Description	Q'ty Per Assembly
36	C203 4522	Tetron Screen	1
37	C203 4523	Stainless Screen	1
39	C203 4524	Screen Plate Spring	2
40	C200 4679	Rear Shield Drum Flange	1
41	C201 4654	Rear Drum Flange	1
42	C201 4652	Gear - 30T	1
43	C200 8522	Ground Wire	1
44	C200 4940	Clamper Magnet	1
100	0314 0080Z	Philips Pan Head Screw - M4x8	
101	1102 1341	Connector - 8P	
102	0595 0140E	Hexagon Bolt - M5x14	
103	0575 0080E	Hexagon Headless Set Screw - M5x8	
104	0807 4126	Flat Washer - 6.2x12x0.2mm	
105	0807 5044	Spacer - 8.1x11.5x0.2mm	
106	0807 5076	Washer - 8x13x2.2mm	
107	0807 3103	Washer - 4x13x2.3mm	
108	0951 4006Z	Philips Screw With Flat Washer - M4x6	
109	0720 0050Z	Retaining Ring - M5	
111	0323 0050Z	Philips Sunken Head Screw - M3x5	
112	0960 4006Z	Philips Flange Screw - M4x6	
113	0594 0080Z	Bolt - M4x8	
114	0804 6091	Hexagonal Set Screw - M2x5	
115	0574 0050E	Hexagon Headless Set Screw - M4x5	
116	0951 4008Z	Philips Screw With Flat Washer - M4x8	
117	0807 7114	Washer - 16x24x0.3mm	
118	0595 0200E	Hexagon Bolt - M5x20	
119	0314 0060Z	Philips Pan Head Screw - M4x6	

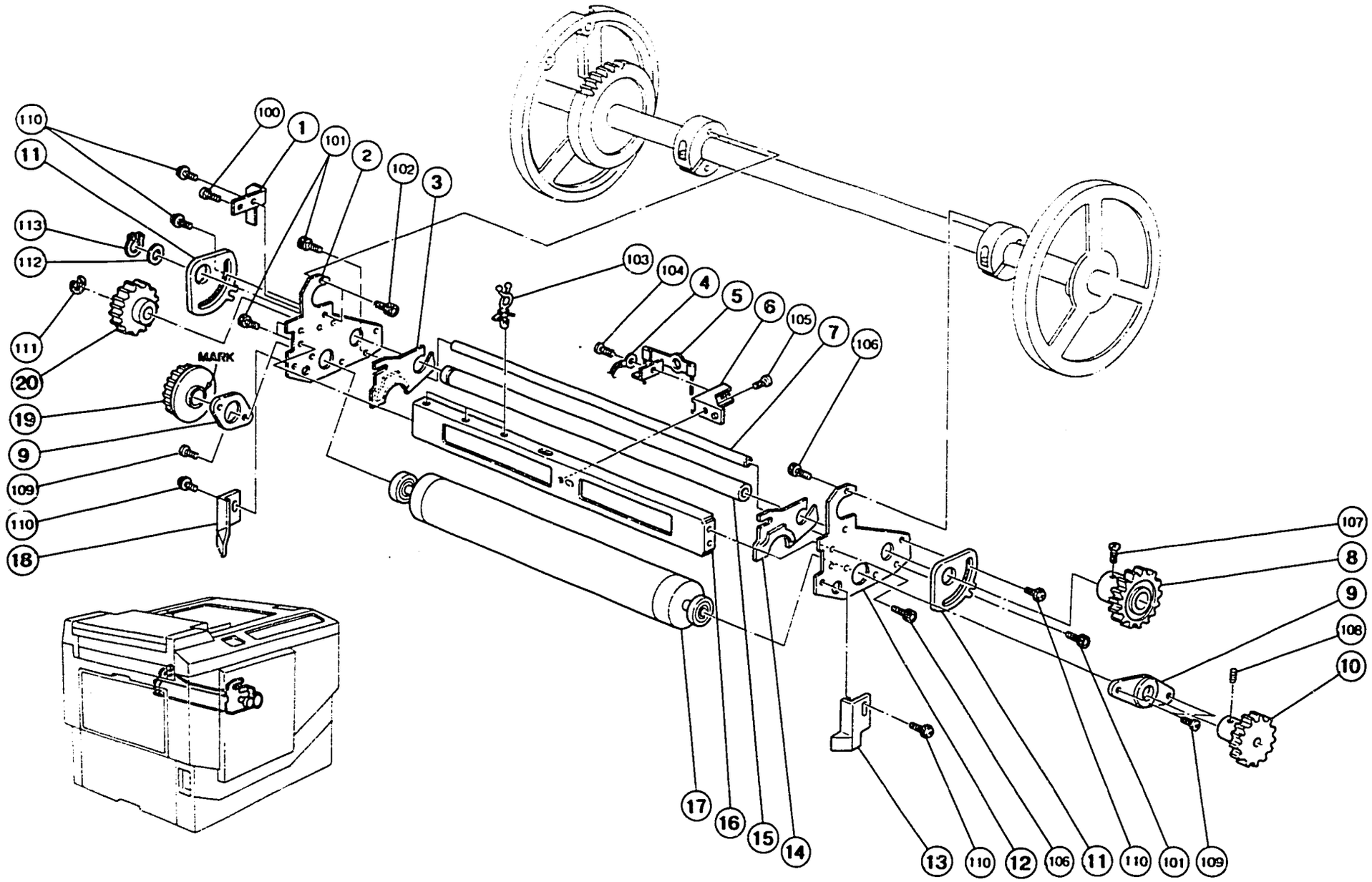
110
11
113
112
111
20
19
9
109
110
18
100
1
101
2
102
3
MARK
103
104
4
5
6
105
7
106
107
8
9
108
10
17
16
15
14
13
110
12
106
11
110
101
109

18. DRUM SECTION III

September 15, '88

Index No.	Part No.	Description	Q'ty Per Assembly
1	C200 4749	Ground Plate	1
2	C201 4660	Rear Side Plate - Ink Roller	1
3	C200 4766	Rear Bank Plate	1
4	C200 8520	Ink Detector Harness	1
5	C203 4543	Ink Detector	1
6	C200 4733	Ink Detector Bracket	1
7	C200 4715	Shaft Stay - Ink Roller	1
8	C200 4748	Gear - 45T	1
9	C201 4665	Bearing Holder	2
10	C200 3629	Gear - 20T	1
11	C200 4723	Adjusting Plate - Doctor Roller	2
12	C201 4661	Front Side Plate - Ink Roller	1
13	C200 4745	Front Drum Blade	1
14	C200 4765	Front Bank Plate	1
15	C200 4722	Drum Doctor Roller	1
16	C201 4664	Ink Roller Stay	1
17	C201 4666	Drum Ink Roller	1
18	C200 4746	Rear Drum Blade	1
19	C200 4724	Gear - 36T	1
20	C200 4726	Gear - 30T	1

Index No.	Part No.	Description	Q'ty Per Assembly
100	0314 0080Z	Philips Pan Head Screw - M4x8	
101	0594 0060E	Socket Screw - M4x6	
102	0594 0080Z	Bolt - M4x8	
103	1105 0209	Clamp	
104	0434 0082Z	Tapping Screw - M4x8	
105	0314 0060Z	Philips Pan Head Screw - M4x6	
106	0594 0080E	Bolt - M4x8	
107	0313 0050Z	Philips Pan Head Screw - M3x5	
108	0573 0040E	Hexagon Headless Set Screw - M3x4	
109	0313 0040Z	Philips Pan Head Screw - M3x4	
110	0951 4006Z	Philips Screw With Flat Washer - M4x6	
111	0720 0050Z	Retaining Ring - M5	
112	0807 7114	Washer - 16x24x0.3mm	
113	0725 0160E	Retaining Ring C - M16	

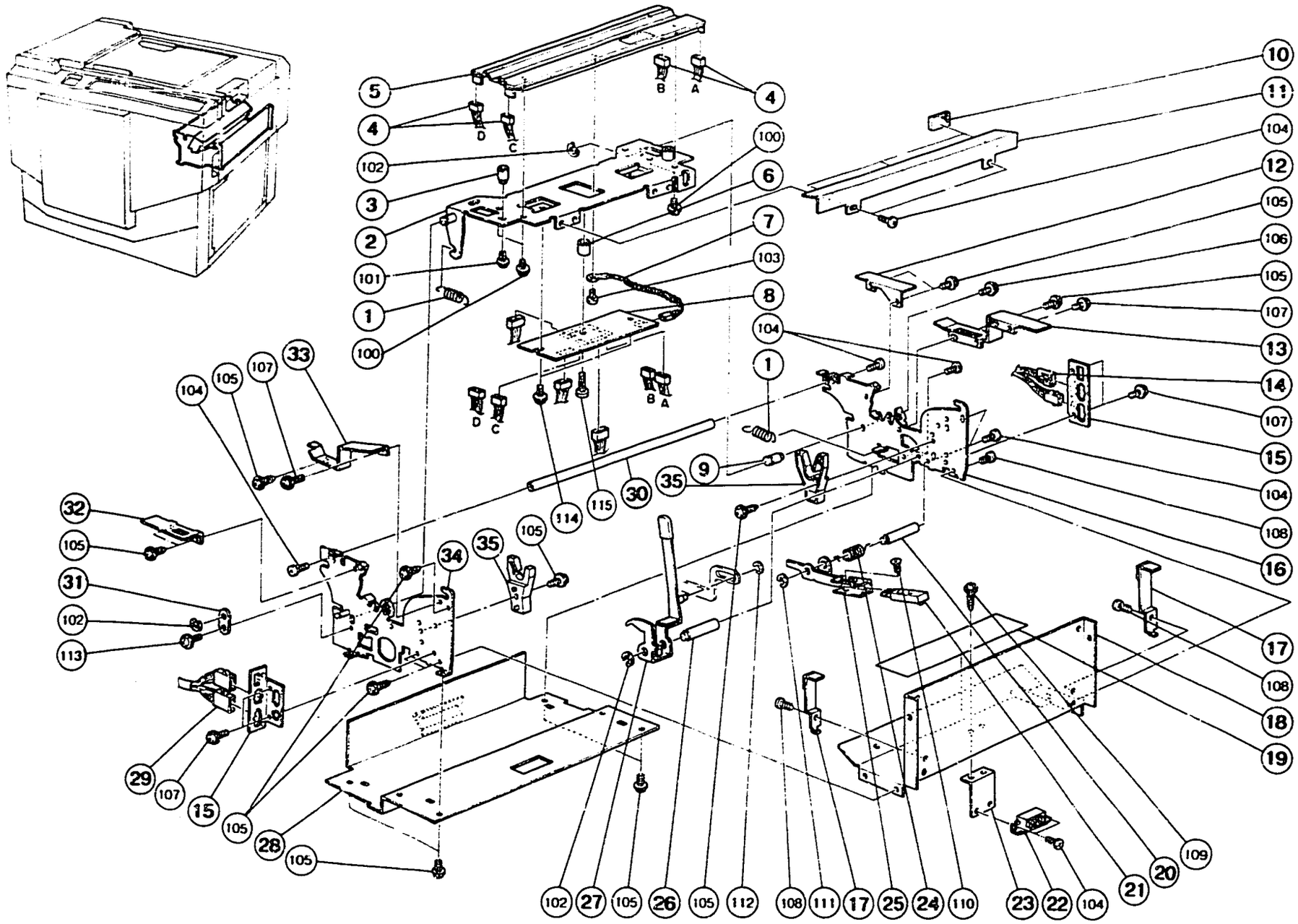
5
4
102
3
2
101
1
100
B
A
D
C
100
6
7
103
8
104
1
9
35
30
114
115
105
34
35
33
107
105
104
32
105
31
102
113
29
107
15
105
28
105
10
11
104
12
105
106
105
107
13
14
107
15
104
108
16
17
108
18
19
109
20
21
104
22
23
110
24
25
17
111
108
112
105
26
105
27
102

19. PLOTTER/MASTER FEED SECTION I

Index No.	Part No.	Description	Q'ty Per Assembly
1	C200 4138	Thermal Head Spring	2
2	C201 4017	Therminal Head Bracket	1
3	C200 4134	Position Pin	1
4	C201 8111	Thermal Head Harness	4
5	C200 8003	Thermal Head	1
6	C201 4085	Spacer - 5.2x9x9mm	1
7	C200 8500	Thermister	1
8	C201 8032	Thermal Head Drive Board	1
9	C200 4136	Bracket Support Shaft	1
10	C200 4937	Plate	3
11	C201 4019	Roll Set Guide Plate	1
12	C200 4406	Front Right Cover - Ploter	1
13	C200 4407	Rear Right Cover - Ploter	1
14	C201 8179	Thermal Head Drive Harness	1
15	C201 4084	Plotter Connector Bracket	2
16	C201 4102	Right Side Plate - Plotter	1
17	C201 4007	Brake Plate	2
18	C201 4003	Receving Stand - Master Roller	1
19	C201 2542	Decal - Thermal Head Cleaning	1
20	C200 4115	Sensor Shaft	1
21	5203 5230	Master Sensor	1
22	5054 0536	Magnet Catch Ass'y	6
23	C201 4083	Magnet Catch Bracket	1
24	C200 4116	Sensor Spring	1
25	C200 4114	Sensor Bracket	1
26	C200 4126	Lever Shaft	1
27	C201 4011	Pressure Release Lever	1
28	C203 4080	Plotter Lower Cover	1
29	C201 8200	Plotter Unit Harness	1
30	C200 4014	Plotter Stay	1
31	C200 4137	Bracket Fixing Plate	1
32	C200 4404	Cutter Connector Bracket	1
33	C200 4405	Rear Left Cover - Ploter	1
34	C201 4101	Left Side Plate - Plotter	1
35	C200 4112	Master Holder	2

Index No.	Part No.	Description	Q'ty Per Assembly
100	0960 4006Z	Philips Flange Screw - M4x6	
101	0960 3005Z	Philips Flange Screw - M3x5	
102	0720 0060Z	Retaining Ring - M6	
103	0801 1004	Screw - M4x4	
104	0314 0080Z	Philips Pan Head Screw - M4x8	
105	0964 4008Z	Tapping Screw W/Flat Washer - M4x8	
106	0960 4008B	Philips Flange Screw - M4x8	
107	0951 4005Z	Philips Screw With Flat Washer- M4x5	
108	0434 0080Z	Tapping Screw - M4x8	
109	0964 3008Z	Tapping Screw W/Flat Washer - M3x8	
110	0323 0100Z	Philips Sunken Head Screw - M3x10	
111	0720 0050Z	Retaining Ring - M5	
112	0720 0030Z	Retaining Ring - M3	
113	0951 4008Z	Philips Screw With Flat Washer - M4x8	
114	0951 4006Z	Philips Screw With Flat Washer - M4x6	
115	0315 0140Z	Philips Pan Head Screw - M5x14	

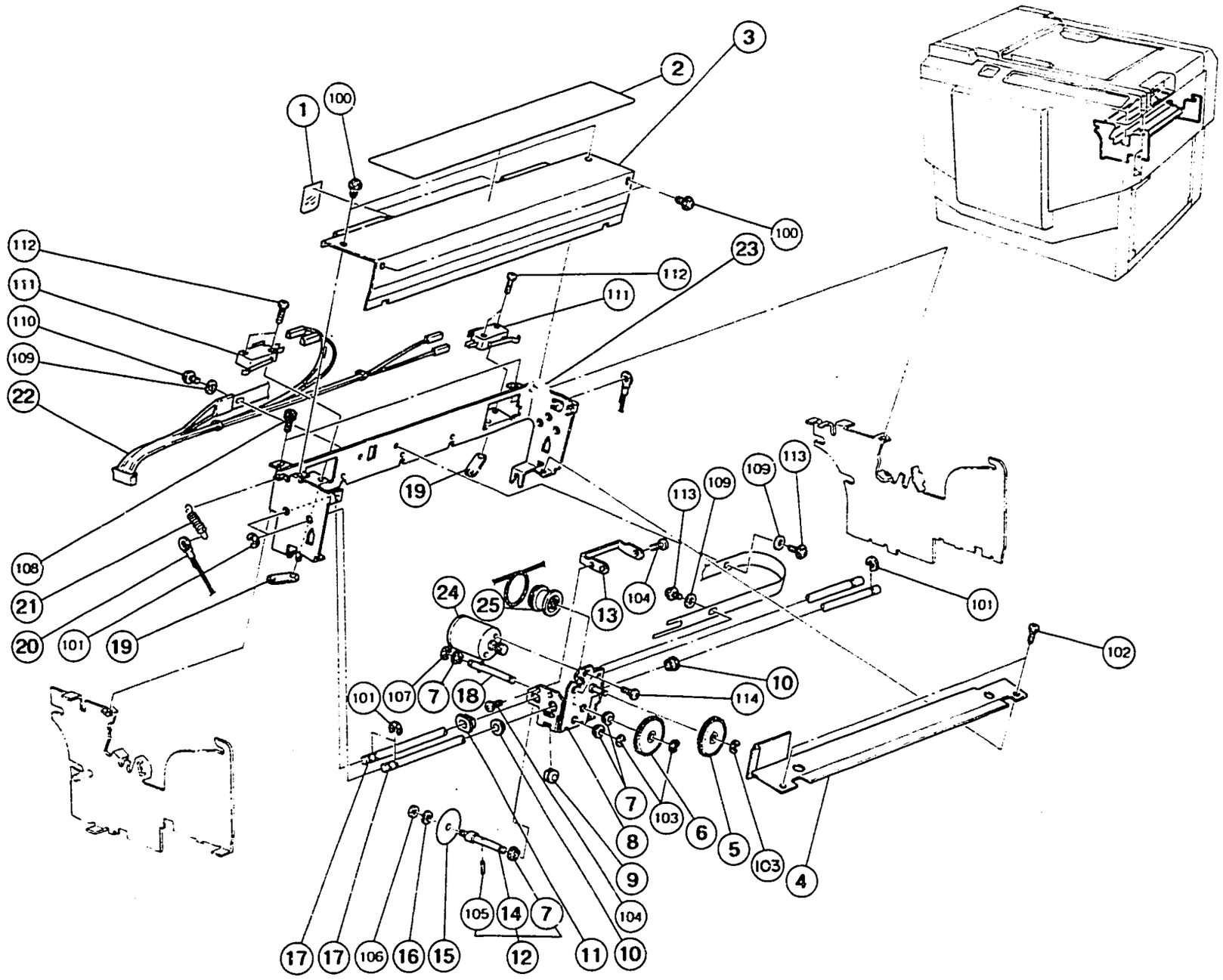
1
100
2
3
100
23
112
111
112
111
110
109
22
19
113
109
109
113
108
21
20
101
19
24
25
13
104
101
102
10
114
101
107
7
18
7
103
6
5
103
4
8
9
104
105
14
7
17
17
106
16
15
12
11
10

20. PLOTTER/MASTER FEED SECTION II

September 15, '88

Index No.	Part No.	Description	Q'ty Per Assembly
1	C200 4248	Upper Mylar - Guide Plate	2
2	C203 2709	Decal - Master Setting	1
3	C203 4096	Cutter Unit Cover	1
4	C203 4088	Cutter Plate	1
5	C200 4371	Coupled Gear - 16T & 64T	1
6	C200 4372	Gear - 64T	1
7	C200 4376	Bushing - M4	4
8	C200 4351	Cutter Slider	1
9	C200 4373	Gear - 16T	1
10	C200 4354	Bushing - M6	2
11	C200 4355	Bushing - M8×6	1
12	C200 4392	Cutter Shaft	1
13	C200 4356	Slider Supporter	1
14	C200 4375	Cutter Shaft	1
15	C200 4377	Cutter	1
16	C201 4070	Cutter Spacer - 5.2×10×1mm	1
17	C201 4056	Cutter Guide Shaft	2
18	C200 4391	Pulley Shaft	1
19	5056 0509	Nut Plate - Microswitch	2
20	C200 4318	Cutter Drive Wire	1
21	5501 6538	Spring - Middle Roller	1
22	C201 8091	Cuttrer Unit Harness	1
23	C201 4049	Cutter Plate	1
24	C200 8418	Motor - DC22W	1
25	C200 4379	Pulley - 36T	1
26	C200 4356	Slider Supporter	1

Index No.	Part No.	Description	Q'ty Per Assembly
100	0964 3008Z	Tapping Screw W/Flat Washer - M3×8	
101	0720 0040Z	Retaining Ring - M4	
102	0433 0080Z	Tapping Screw - M3×8	
103	0720 0030Z	Retaining Ring - M3	
104	0313 0040Z	Philips Pan Head Screw - M3×4	
105	0621 6080E	Spring Pin - 1.6×8mm	
106	0710 0040Z	Hexagon Nut - M4	
107	0720 0030Z	Retaining Ring - M3	
108	0594 0060E	Socket Screw - M4×6	
109	0807 2019	Washer - 3.2×10×0.8mm	
110	0951 3005Z	Philips Pan Head Screw - M3×5	
111	1204 0825	Micro Switch - AH71543	
112	0313 0140Z	Philips Pan Head Screw - M3×14	
113	0951 3005Z	Philips Pan Head Screw - M3×5	
114	0313 0050Z	Philips Pan Head Screw - M3×5	

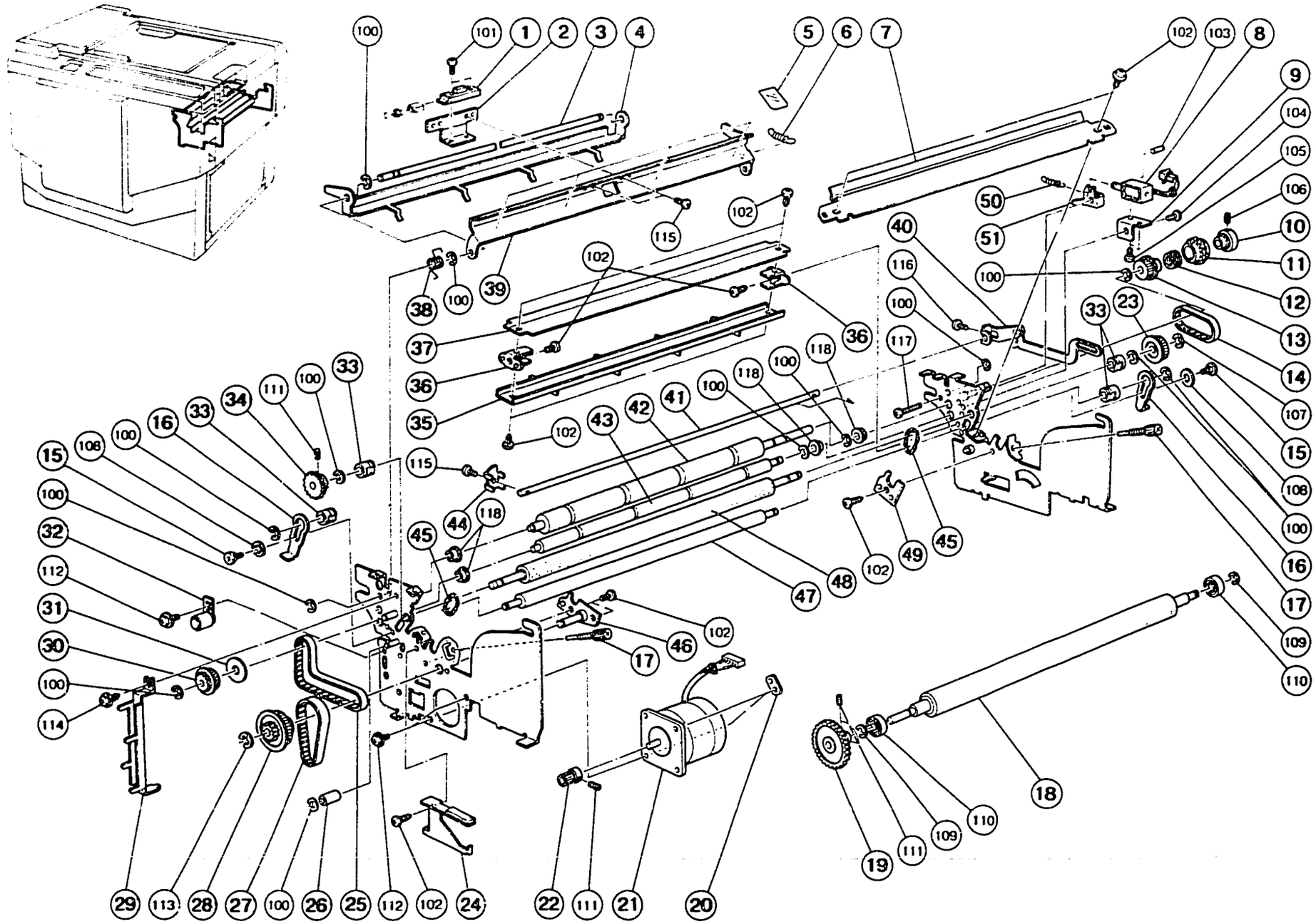
100
101
1
2
3
4
5
6
7
102
103
8
9
104
105
106
10
11
12
13
14
107
15
108
100
16
17
109
110
18
19
111
109
110
20
21
111
22
24
102
112
25
26
100
27
28
113
29
114
30
31
112
32
15
108
100
16
33
34
111
100
33
35
36
37
38
100
39
115
102
36
40
116
100
117
118
100
41
42
43
44
118
45
46
17
102
47
48
102
49
45
50
51
100
33
23
102
115
102
118
100

21. PLOTTER/MASTER FEED SECTION III

September 15, '88

Index No.	Part No.	Description	Q'ty Per Assembly
1	C203 8137	Master Sensor	1
2	C203 4092	Sensor Bracket	1
3	C201 4041	Master Guide Shaft	1
4	C201 4042	Reverse Guide Plate	1
5	C200 4248	Upper Mylar - Guide Plate	4
6	5506 4628	Spring - Delivery Roller	1
7	C201 4030	Master Guide Plate	1
8	C200 8440	Reverse Roller Solenoid	1
9	C200 4223	Reverse Solenoid Bracket	1
10	C200 4216	Reverse Roller Clutch Barrel	1
11	C200 4217	Reverse Roller Clutch Sleeve	1
12	C200 4215	Reverse Roller Clutch Spring	1
13	C200 4213	Pulley - 28T	1
14	C200 4218	Timing Belt - MM - 75-4.8-G	1
15	5403 2075	Stepped Screw	2
16	C203 4060	Tension Release Slider	2
17	C200 4150	Fixing Screw	2
18	C201 4065	Platen Roller	1
19	C200 4143	Gear - 40T	1
20	C201 3054	Plate Nut	2
21	C200 8423	Motor - DC7.2W	1
22	C200 4162	Pulley - 18T	1
23	C200 4183	Pulley - 28T	1
24	C200 4151	Platen Plate	1
25	C200 4169	Timing Belt - MM190x6.4	1
26	C200 4171	Spacer - 6x8x14mm	1
27	C200 4168	Timing Belt - MM88x9.5	1
28	C200 4163	Pulley - 16T	1
29	C203 4072	Harness Bracket	1
30	C200 4164	Pulley - 34T	1
31	C200 4170	Spacer - 9.4x23.4x2.9	1
32	C203 3044	Tension Roller	1
33	5056 0188	Bushing - 6mm - Long	4
34	C200 4165	Gear - 22T	1
35	C200 4232	Reverse Guide	1
36	C201 4038	Bracket - Guide Pawl	2
37	C201 4043	Guide Plate - Master Bucle	1
38	C200 4246	Guide Plate Spring	1
39	C200 4244	Master Guide	1
40	C203 4054	Tension Release Arm	1
41	C203 4059	Tension Release Shaft	1
42	C203 4046	Upper Reverse Roller	1
43	C203 4045	Lower Reverse Roller	1
44	C200 4196	Tension Release Arm - Small	1
45	C200 4184	Tension Spring	2
46	C201 4024	Pulley Plate	1
47	C200 4182	Lower Master Feed Roller	1
48	C200 4181	Upper Master Feed Roller	1
49	C201 4026	Positioning Plate	1
50	5607 3616	Guide Plate Spring	1
51	C201 4068	Plotter Clutch Pawl	1

Index No.	Part No.	Description	Q'ty Per Assembly
100	0720 0050Z	Retaining Ring - M5	
101	0313 0080Z	Philips Pan Head Screw - M3x8	
102	0434 0080Z	Tapping Screw - M4x8	
103	0622 0060E	Spring Pin - 2x6mm	
104	0314 0080Z	Philips Pan Head Screw - M4x8	
105	0801 0026	Philips Pan Head Screw - M3x4	
106	0574 0060E	Hexagon Headless Set Screw - M4x6	
107	0720 0040Z	Retaining Ring - M4	
108	0701 0060Z	Flat Washer - M6	
109	0720 0060Z	Retaining Ring - M6	
110	0805 3250	Ball Bearing - 8x6mm	
111	0574 0040E	Hexagon Headless Set Screw - M4x4	
112	0960 4010Z	Philips Flange Screw - M4x10	
113	0720 0080Z	Retaining Ring - M8	
114	0964 4008Z	Tapping Screw W/Flat Washer - M4x8	
115	0313 0050Z	Philips Pan Head Screw - M3x5	
116	0313 0060Z	Philips Pan Head Screw - M3x6	
117	0313 0200Z	Philips Screw - 3x20	
118	0805 3263	Bearing - 6x10x6mm	

Index No.	Part No.	Description	Q'ty Per Assembly

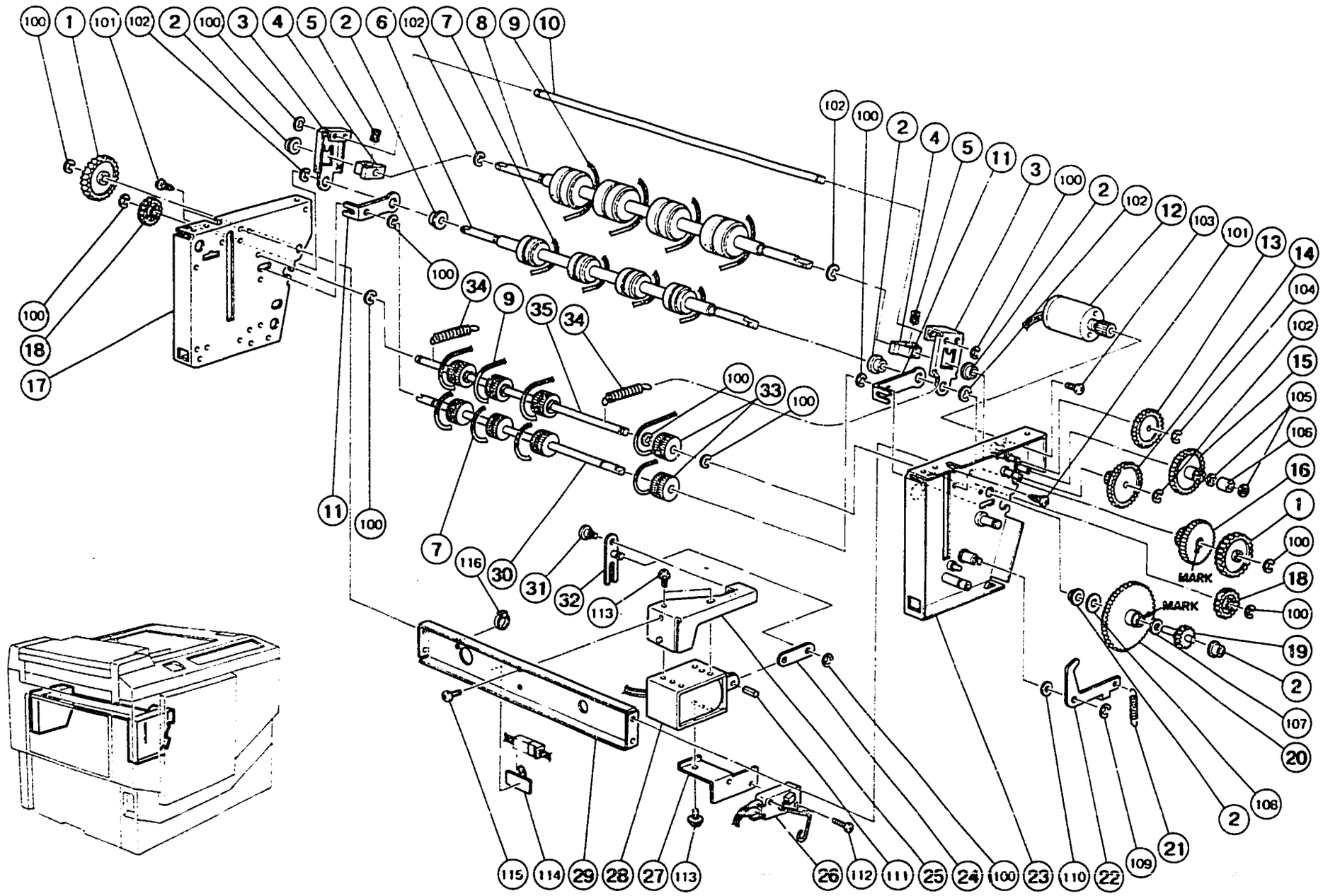
MARK
MARK

22. MASTER EJECT SECTION I

September 15, '88

Index No.	Part No.	Description	Q'ty Per Assembly
1	C200 3627	Gear - 30T	2
2	5506 4608	Bushing - Paper Hold/Down Roller	6
3	C200 3535	Supporter	2
4	C200 3536	Separation Arm Bushing	2
5	C201 3527	Pressure Spring	2
6	C200 3542	Ist Lower Eject Roller	1
7	C200 3546	Lower Belt	4
8	C200 3539	Ist Upper Eject Roller	1
9	C200 3545	Upper Belt	4
10	C200 3537	Arm Connect Shaft	1
11	C200 3529	Pulley Plate	2
12	C201 8061	Motor - DC25.8W	1
13	C200 3604	Coupled Gear - 16T & 50T	1
14	C200 3609	Coupled Gear - 58T & 20T	1
15	C200 3606	Coupled Gear - 62T & 20T	1
16	C200 3607	Coupled Gear - 62T & 32T	1
17	C201 3520	Rear Side Plate - Master Eject	1
18	C200 3628	Gear - 20T	2
19	C200 3614	Gear - 16T	1
20	C200 3610	Gear - 116T	1
21	C200 3638	Lever Spring	1
22	C200 3636	Pressure Plate Lever	1
23	C201 3502	Front Side Plate - Master Eject	1
24	C200 3557	Solenoid Plate	1
25	C200 3553	Solenoid Bracket	1
26	C201 3534	Detecting Switch - Master Eject	1
27	C200 3559	Detecting Switch Bracket	1
28	C200 8437	Master Eject Solenoid	1
29	C201 3523	Master Eject Stay	1
30	C201 3529	Lower Pulley Shaft	1
31	5403 2075	Stepped Screw	1
32	C200 3554	Solenoid Arm	1
33	C200 3547	Pulley	8
34	C203 3501	Tension Spring	2
35	C201 3530	Upper Pulley Shaft	1

Index No.	Part No.	Description	Q'ty Per Assembly
100	0720 0040Z	Retaining Ring - M4	
101	0434 0060Z	Tapping Screw - M4x6	
102	0720 0050Z	Retaining Ring - M5	
103	0313 0030Z	Philips Pan Head Screw - M3x3	
104	0720 0030Z	Retaining Ring - M3	
105	0807 4076	Spacer	
106	0707 6045B	Bushing - M6x45	
107	0807 4053	Spacer - 6.2x9.5x0.1mm	
108	0807 4103	Spacer - 0.5mm	
109	0720 0060Z	Retaining Ring - M6	
110	0807 5013	Flat Washer - 8.4mm	
111	0623 0120E	Spring Pin - 3x12mm	
112	0313 0140Z	Philips Pan Head Screw - M3x14	
113	0951 3006Z	Philips Screw With Flat Washer - M3x6	
114	1105 0020	Adhesive Wire Clamp	
115	0314 0050Z	Philips Pan Head Screw - M4x5	
116	1105 0042	Binder - Harness	

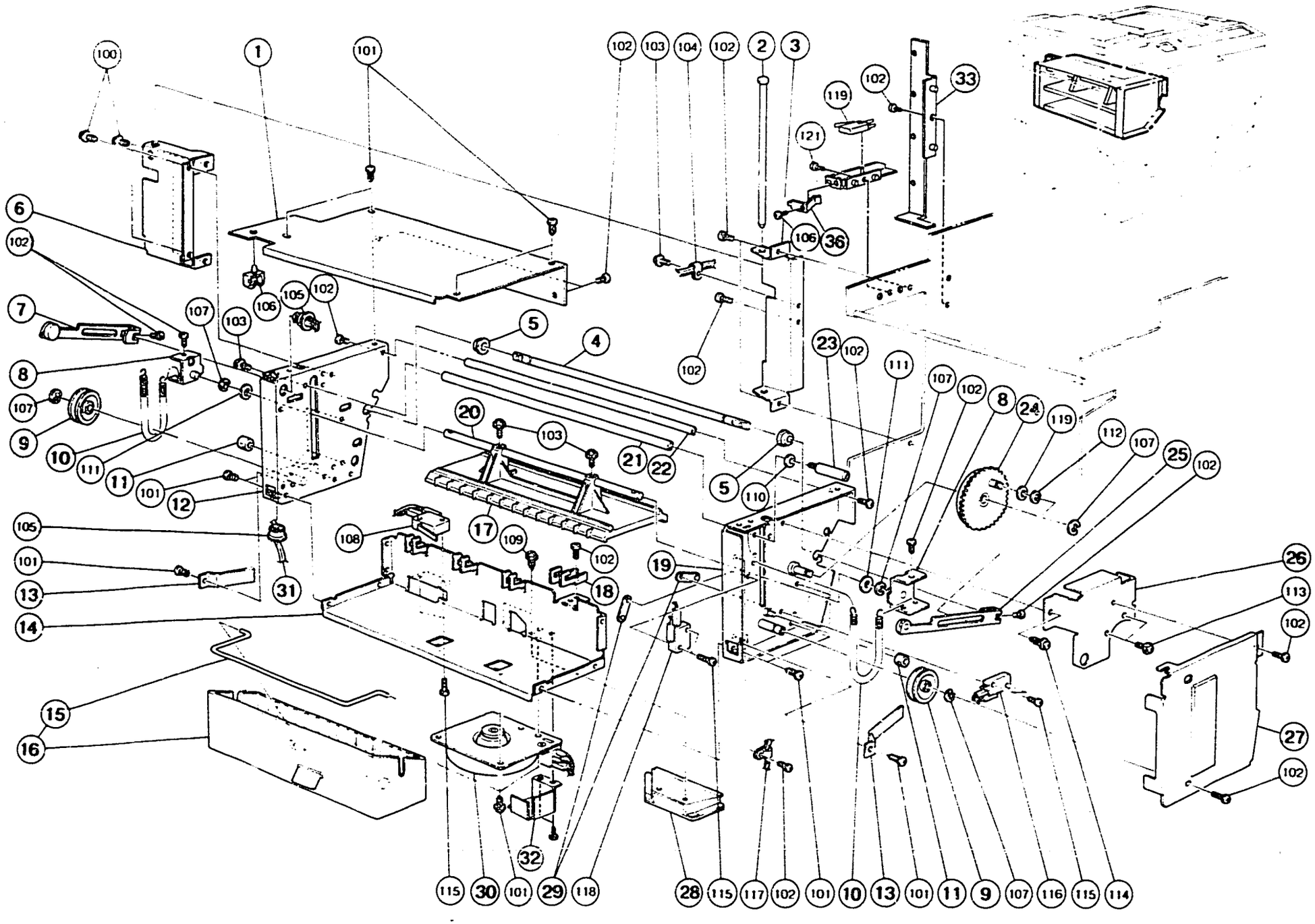
100
1
101
102
103
104
102
2
3
119
102
33
121
6
102
106
36
7
107
103
106
105
102
5
4
102
23
102
111
107
102
8
24
119
112
107
25
102
8
107
9
10
111
11
101
12
20
103
21
22
5
110
105
101
13
14
108
17
109
102
19
18
31
26
113
102
15
16
27
102
32
115
30
101
29
118
28
115
117
102
101
10
13
101
11
9
107
116
115
114

23. MASTER EJECT SECTION II

September 15, '88

Index No.	Part No.	Description	Q'ty Per Assembly
1	C203 3526	Upper Inner Cover	1
2	C203 3504	Hinge Shaft	1
3	C203 3503	Master Eject Hinge	1
4	C201 3542	Pressure Arm Shaft	1
5	5501 6185	Bushing - Shaft - Water Adjusting	2
6	C200 3517	Master Eject Hinge	1
7	C201 3549	Rear Link	1
8	C201 3545	Pressure Arm	2
9	C200 3712	Pulley	2
10	5507 6766	Wire Spring	2
11	5501 4719	Rubber Ring - Stopper	2
12	C201 3520	Rear Side Plate - Master Eject	1
13	C200 3753	Guide	2
14	C203 3527	Bottom Plate - Master Eject	1
15	C203 3511	Arm - Master Eject Box	1
16	C203 3505	Master Eject Box	1
17	C200 3708	Pressure Plate	1
18	C201 3531	Pulley Guide	4
19	C201 3502	Front Side Plate - Master Eject	1
20	C201 3544	Pressure Plart Shaft	1
21	C200 3509	Master Eject Stay - Large	1
22	C200 3508	Master Eject Stay - Small	1
23	C203 3502	Look Stud	1
24	C200 3618	Gear - 60T	1
25	C201 3548	Front Link	1
26	C200 3631	Bracket	1
27	C200 3519	Front Inner Cover	1
28	C201 6015	Air Knife Nozzle	1
29	5056 0509	Nut Plate - Microswitch	2
30	C200 8408	Motor - AC15W	1
31	C200 8482	Delivery Harness	1
32	C203 3531	Capacitor Connector Cover	1
33	C203 2130	Master Eject Cover	1
34	C203 2125	Safety Switch Bracket	1
35	C203 8204	Grounding Wire	1
36	C200 3123	Support Plate - Safety Switch	1
100	0964 4010Z	Tapping Screw W/Flat Washer - M4×10	
101	0434 0060Z	Tapping Screw - M4×6	
102	0314 0080Z	Philips Pan Head Screw - M4×8	
103	0951 4008Z	Philips Screw With Flat Washer - M4×8	
104	1105 0009	Nylon Clip - 5N	
105	1106 0411	Bushing - 11.5mm	
106	0433 0060W	Tapping Screw - M3×6	
107	0720 0060Z	Retaining Ring - M6	
108	1204 1490	Micro Switch - V-53-1A3	
109	0964 3008Z	Tapping Screw W/Flat Washer - M3×8	
110	0701 0050Z	Flat Washer - M5	
111	0700 0080Z	Flat Washer - M8	
112	0720 0050Z	Retaining Ring - M5	
113	0951 3004Z	Philips Screw With Flat Washer - M3×4	
114	0964 4008Z	Tapping Screw W/Flat Washer - M4×8	
115	0313 0140Z	Philips Pan Head Screw - M3×14	
116	1204 0886	Micro Switch	
117	1105 0008	Nylon Clip - 2N	
118	1204 1438	Micro Switch	
119	0700 0060Z	Flat Washer - M6	
120	0314 0140Z	Philips Screw - M4×14	
121	0801 1004	Screw - M4×4	
122	0705 0040B	Bushing - 4×5mm	

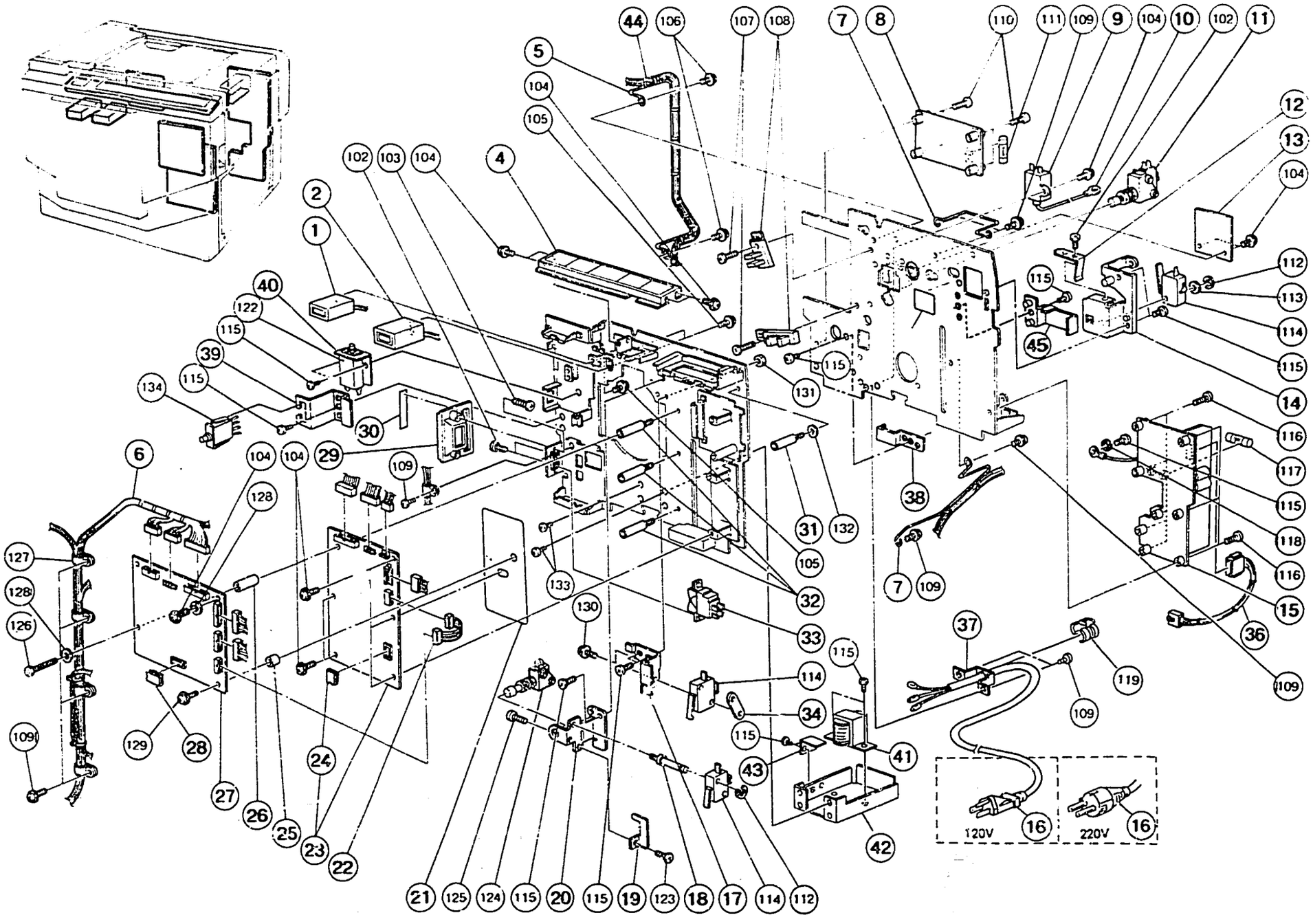
120V
220V

24. ELECTRICAL SECTION

Index No.	Part No.	Description	Q'ty Per Assembly
1	C200 8443	Master Counter	1
2	C200 8446	Copy Counter	1
4	C201 2710*	Operation Panel - LT (SS810)	1
4	C201 2810*	Operation Panel - A4 (SS810)	1
4	C206 2710	Operation Panel (SS830)	1
5	C203 8095	Upper Harness Supporter	1
6	C206 8092	Main Harness (SS830)	1
6	C201 8292*	Main Harness (SS810)	1
7	C203 8096	Lower Harness Supporter	2
8	C201 8057	AC Drive Board	1
9	C203 8135	Noise Filter	1
10	C202 8095	Grounding Harness	1
11	C203 8115	Micro Switch	1
12	C200 3123	Support Plate - Safety Switch	1
13	C200 8116	Ink Detecting Board	1
14	C203 2112	Safety Switch Bracket	1
15	C202 8353	Power Supply Unit	1
16	C203 8124	Power Supply Cord (120V)	1
16	C201 8162	Power Supply Cord (220V)	1
17	C201 4541	Bracket - Drum Detecting Switch	1
18	C200 3756	Safety Switch Shaft	1
19	C200 3755	Plate Spring	1
20	C201 2551	Switch Bracket	1
21	C203 5053	Insulating Sheet	1
22	C201 8046*	Flat Cable - Master Processing (SS810)	1
22	C202 8088	Flat Cable - Master Processing (SS830)	1
23	C201 8069	Master Processing Control Board - LT	1
23	C201 8002	Master Processing Control Board - A4	1
24	C201 8004	IC - TMM24128 AP-20	1
25	C200 2438	Operation Panel Spacer	1
26	C200 2595	Main Board Spacer	1
27	C201 8182*	Main Control Board (SS810)	1
27	C206 8042	Main Control Board (SS830)	1
28	C201 8183*	IC - TMM24128 AP-20 (SS810)	1
28	C206 8045	IC - TMM24128 AP-20 (SS830)	1

*This part number does not apply in U.S.

Index No.	Part No.	Description	Q'ty Per Assembly
29	C203 2405	Main Switch Cover	1
30	C201 2461	Decal - Main Switch	1
31	C200 2597	Main Board Stud - Short	1
32	C200 2596	Main Board Stud - Long	3
33	5055 0804	Main Switch - 125V 10A	1
34	5056 0509	Nut Plate - Microswitch	1
35	C201 2540	Master Cutter Decal	1
36	C201 8122	Thermal Power Supply Harness	1
37	C203 2119	Bracket - Power Supply Cord	1
38	C203 2128	AC Drive Board Cover	1
39	C203 2057	Switch Bracket	1
40	C203 2059	Circuit Braker - Bracket	1
41	C203 8181	Transformer - 120V/100V	1
41	C201 8152	Transformer - 235V/105V	1
42	C203 2018	Transformer Bracket	1
43	C203 2131	Transformer Cover	1
44	C201 8287	AC Harness	1
45	C203 2114	Bracket	
100	0313 0140Z	Philips Pan Head Screw - M3×14	
101	1204 1442	Micro Switch	

Index No.	Part No.	Description	Q'ty Per Assembly
102	0313 0050Z	Philips Pan Head Screw - M3×5	
103	0433 0060Z	Tapping Screw - M3×6	
104	0951 3006Z	Philips Screw With Flat Washer - M3×6	
105	0951 3004Z	Philips Screw With Flat Washer - M3×4	
106	0951 4008Z	Philips Screw With Flat Washer - M4×8	
107	0314 0120Z	Philips Pan Head Screw - M4×12	
108	1403 0539	Photo Interruptor - EE-SX450-P1	
109	0960 4008Z	Flange Head Screw - 4×8	
110	0314 0200Z	Philips Pan Head Screw - M4×20	
111	1107 0389	Fuse - 25A	
112	0720 0020Z	Retaining Ring - M2	
113	0701 0030Z	Flat Washer - M3	
114	1204 1442	Micro Switch	
115	0314 0080Z	Philips Pan Head Screw - M4×8	
116	0314 0160Z	Philips Pan Head Screw - M4×16	
117	1107 0500	Fuse - 8A	
118	0705 0040B	Bushing - 4×5mm	
119	1106 0101	Cord Stopper (120V)	
119	1106 0132	Cord Stopper (220V)	
120	1802 2800	Grounding Wire	
121	1105 0009	Nylon Clip - 5N	
122	1107 0154	Circuit Breaker - 240V 7A	
122	1107 0134	Circuit Breaker - 5A	
123	0313 0040Z	Philips Pan Head Screw - M3×4	
124	1204 0801	Switch - Green	
125	0313 0120Z	Philips Pan Head Screw - M3×12	
126	0951 3030Z	Philips Screw With Flat Washer	
127	1105 0012	Nylon Clip - 10N	
128	0807 2087	Washer - M3.3	
129	0951 3012B	Philips Screw With Flat Washer - M3×12	
130	0960 3016B	Philips Flange Screw - M3×16	
131	0710 0040Z	Hexagon Nut - M4	
132	0701 0040Z	Flat Washer - M4	
133	0960 5008Z	Philips Flange Screw - M5×8	
134	1204 1595	Switch	

Index No.	Part No.	Description	Q'ty Per Assembly

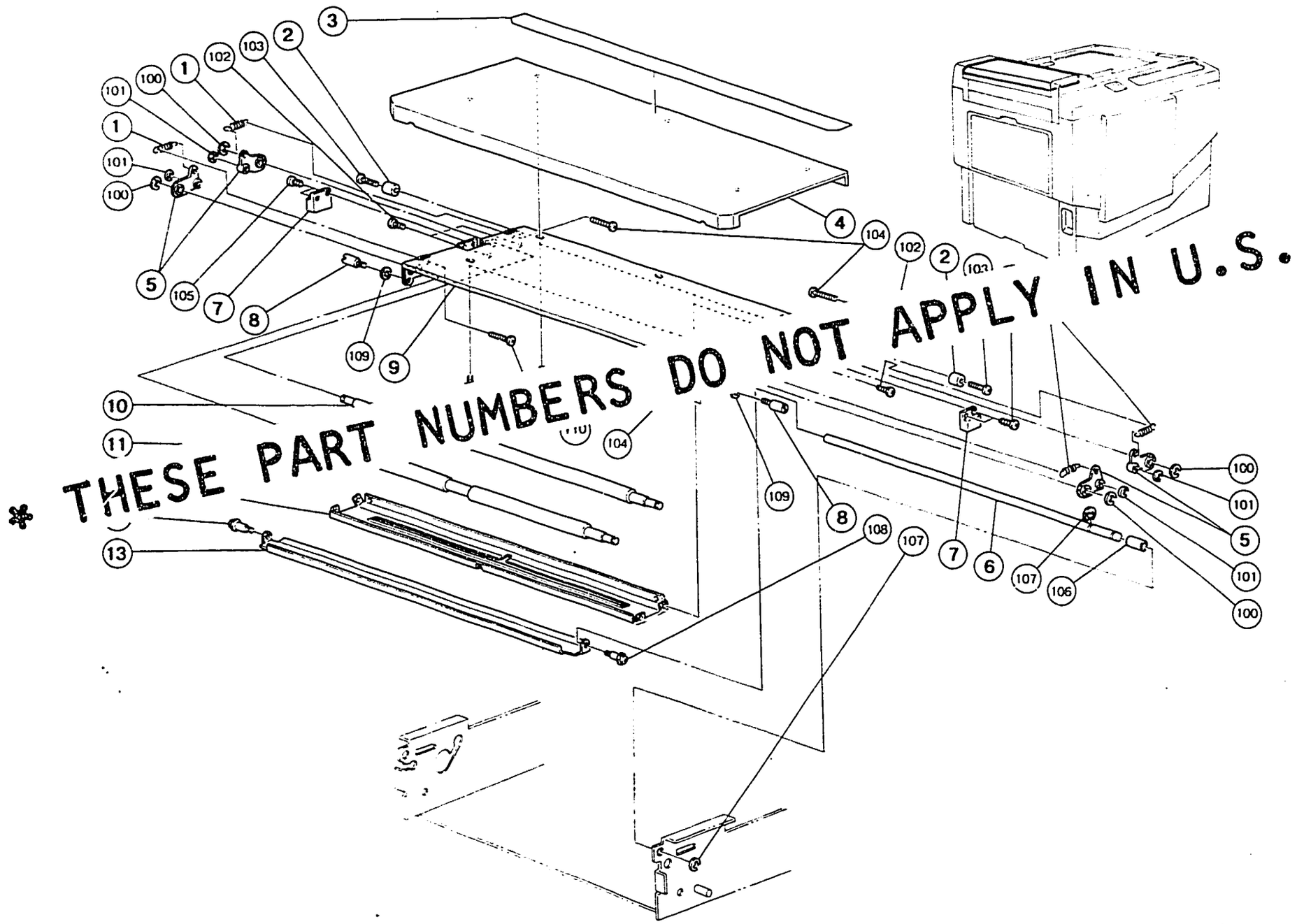
* THESE PART NUMBERS DO NOT APPLY IN U.S.
3
2
103
102
100
1
101
1
101
100
5
105
7
8
109
9
10
11
13
4
104
102
2
103
104
110
109
8
108
107
7
6
107
106
100
101
5
101
100

25. SCANNER SECTION I (SS810)

September 15, '88

Index No.	Part No.	Description	Q'ty Per Assembly
1	C200 3049	Pressure Arm Spring	4
2	C200 3052	Adjusting Shaft	2
3	C201 2454	Decal - Original Table Cover	1
4	C201 3024	Original Table Cover	1
5	C200 3048	Pressure Arm	4
6	C200 3047	Shaft - Scanner Unit	1
7	C200 3053	Magnet Catch	2
8	C200 3045	Shoulder Screw - Inner Cover	
9	C200 3041	Inner Cover - Original Tr-	
10	C200 3065	Original Pres-	1
11	C202 3107	Tr-	1
12	C20		1
13		Plate	1

Index No.	Part No.	Description	Q'ty Per Assembly
100	0720 0050Z	Retaining Ring - M5	
101	0720 0030Z	Retaining Ring - M3	
102	0313 0050Z	Philips Pa-	
103	0313 01407	- ×14	
104		ead Screw - M3×12	
		pping Screw - M3×8	
	6150B	Bushing - 6×15mm	
107	0720 0040Z	Retaining Ring - M4	
108	0803 0043	Screw - M3×11	
109	0701 0030Z	Flat Washer - M3	
110	0951 3005Z	Philips Pan Head Screw - M3×5	

* THESE PART NUMBERS DO NOT APPLY IN U.S.

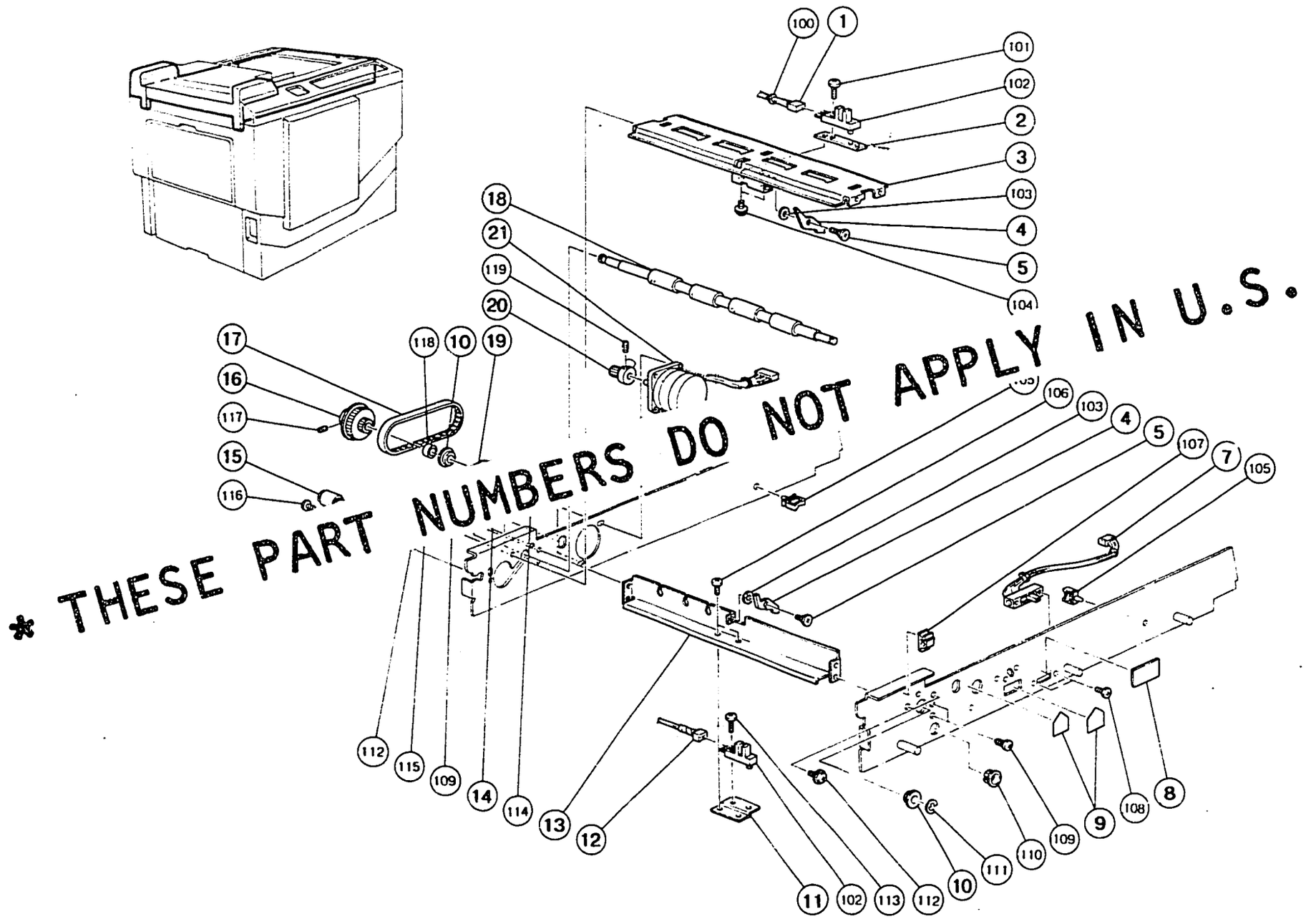

* THESE PART NUMBERS DO NOT APPLY IN U.S.

26. SCANNER SECTION II (SS810)

September 15, '88

Index No.	Part No.	Description	Q'ty Per Assembly
1	C203 8085	Original Sensor Harness	1
2	C201 3074	Sensor Holder - Rear	1
3	C201 3035	Sensor Holder Plate	1
4	C200 3114	Sensor Actiator	2
5	C200 3115	Shoulder Screw - Sensor Actuator	2
6	C201 3054	Plate Nut	4
7	C201 8015	Image Density Switch	1
8	C201 2545	Density Decal	1
9	C205 3150	Seal - Large	
10	5507 6624	Bushing - 8×16×45mm	
11	C201 3073	Sensor Holder - [illegible]	[illegible]
12	C203 8084	[illegible]	1
13	[illegible]	[illegible]	1
*	[illegible]	[illegible] - 0.5×16×23	1
	C203 3044	Tension Roller	1
16	C200 3031	Coupled Pulley - 20T & 48T	1
17	C200 3035	Timing Belt - 123XL	1
18	C201 3068	First Original Feed Roller	1
19	C200 3036	Timing Belt - 100XL	1
20	C202 3103	Pulley	1
21	C200 8420	Motor - DC7.2W	1

THESE PART NUMBERS DO NOT APPLY IN U.S.

Index No.	Part No.	Description	Q'ty Per Assembly
100	1105 0042	Binder - Harness	
101	0313 0100Z	Philips Pan Head Screw - M3×10	
102	1403 0539	Photo Interruptor - EE-SX450-P1	
103	0701 0030Z	Flat Washer - M3	
104	0951 3005Z	Philips Pan [illegible]	
105	1105 0106	[illegible]	
106	[illegible]	[illegible] Screw - M3×6	
[illegible]	[illegible]	[illegible]	
[illegible]	[illegible] 1236	Screw - M2.6×4	
109	0434 0080Z	Tapping Screw - M4×8	
110	1106 0411	Bushing - 11.5mm	
111	0720 0060Z	Retaining Ring - M6	
112	0951 3006Z	Philips Screw With Flat Washer - M3×6	
113	0314 0100W	Philips Pan Head Screw - M4×10	
114	0951 4010Z	Philips Screw With Flat Washer - M4×10	
115	0313 0060Z	Philips Pan Head Screw - M3×6	
116	0801 1004	Screw - M4×4	
117	0554 0040E	Allen Screw - M4×4	
118	0707 8080B	Bushing - 8×8mm	
119	0573 0040E	Hexagon Headless Set Screw - M3×4	

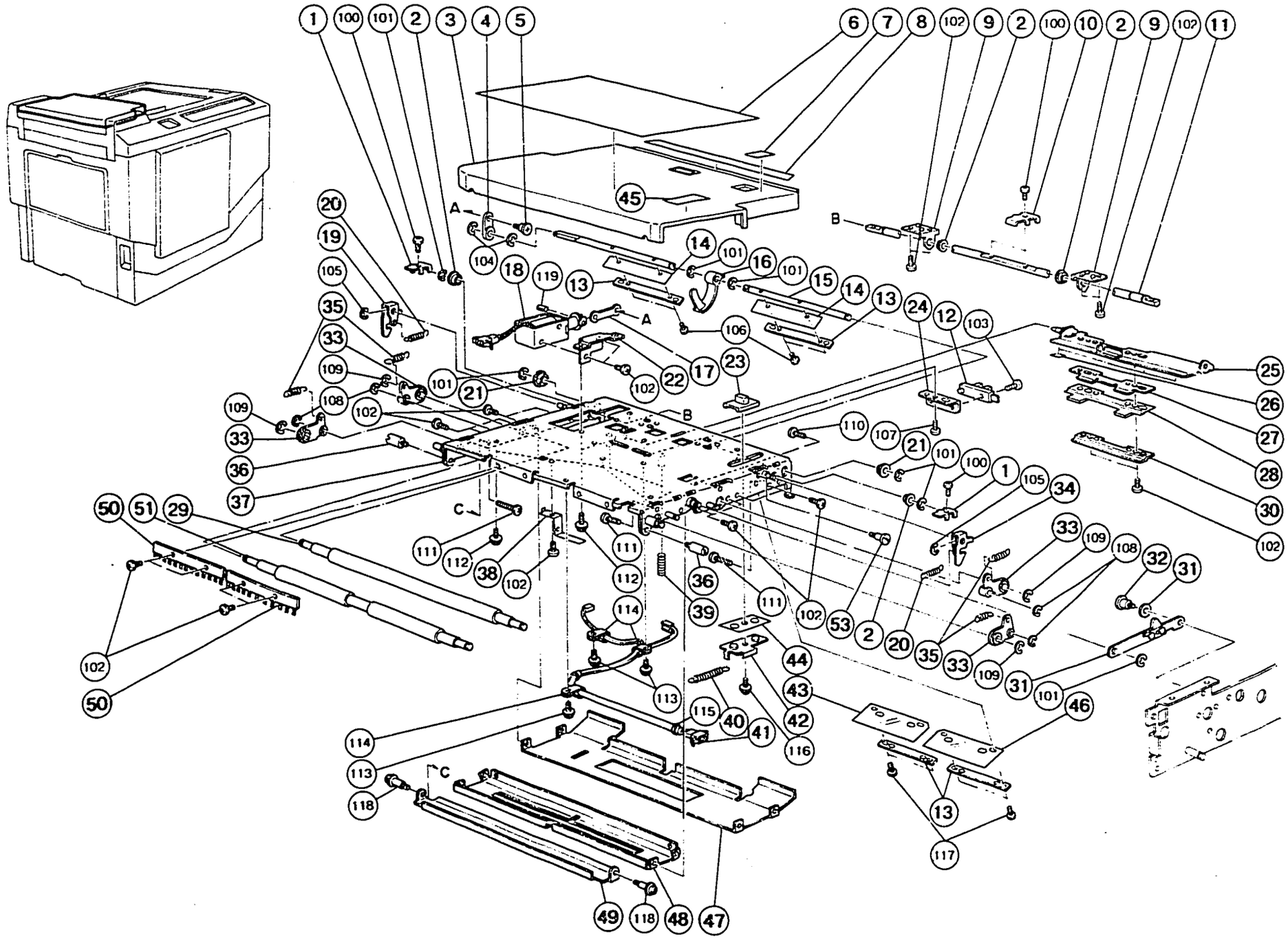

27. SCANNER SECTION I (SS830)

Index No.	Part No.	Description	Q'ty Per Assembly
1	C202 3057	ADF Pawl	2
2	C202 3054	Bushing - 5x7x3mm	4
3	C202 3141	ADF Cover	1
4	C202 3076	Pressure Arm	1
5	C200 3115	Shoulder Screw - Sensor Actuator	3
6	C206 2732	Decal - How To Operate	1
7	C202 2430	Decal - ADF ON/OFF	1
8	C202 2408	Decal - ADF	1
9	C202 3051	Shaft Bracket	2
10	C202 3055	Release Arm	2
11	C202 3058	Arm Shaft	1
12	1403 0539	Photo Interruptor - EE-SX450-P1	1
13	C202 3121	Mylar Supporter	4
14	C202 3122	Pressure Mylar	2
15	C202 3074	Pressure Shaft	1
16	C202 3075	Sensor Feeler	1
17	C202 3071	Solenoid Link	1
18	C202 8090	Original Pressure Solenoid	1
19	C202 3062	Right Hook	1
20	C202 3059	Hook Spring	2
21	5053 0447	Bushing - M6	2
22	C202 3072	Solenoid Bracket	1
23	C202 3143	Cam Knob	1
24	C202 3067	Sensor Bracket	1
25	C202 3085	Separation Bracket	1
26	C202 3098	Spacer - ADF	4
27	C202 3118	Blade Bracket	1
28	C202 3115	Separation Blade	1
29	C200 3065	Original Press Roller	1
30	C202 3081	Blade Holder	1
31	C202 3131	Stopper	1
32	C203 3027	Shoulder Screw - M4	1
33	C200 3048	Pressure Arm	4
34	C202 3061	Left Hook	1
35	C202 3094	Press Roller Spring	4

Index No.	Part No	Description	Q'ty Per Assembly
36	C200 3045	Shoulder Screw - Inner Cover	2
37	C203 3101	ADF Base Plate	1
38	C202 3092	Platen Plate Supporter	1
39	C202 3064	Blade Pressure Spring	2
40	5606 2180	Sector Gear Spring	1
41	C202 8085	ADF Harness	1
42	C202 3144	ADF Cam	1
43	C202 3123	Right Mylar	1
44	C202 3147	Spacer - ADF Cam	1
45	C203 2735	Decal - Open Carefully	1
46	C202 3124	Left Mylar	1
47	C203 3109	Separation Guide Plate	1
48	C201 3066	Original Guide	1
49	C201 3067	Platen Plate	1
50	C200 6135	Antistatic Brush	2
51	C202 3107	Transport Roller	1

Index No.	Part No.	Description	Q'ty Per Assembly
100	0312 5050Z	Philips Pan Head Screw - M2.5×5	
101	0720 0040Z	Retaining Ring - M4	
102	0313 0050Z	Philips Pan Head Screw - M3×5	
103	0314 0100Z	Philips Pan Head Screw - M4×10	
104	0623 0120E	Spring Pin - 3×12mm	
105	0720 0030Z	Retaining Ring - M3	
106	0252 0040Z	Pan Head Screw - M2×4	
107	0951 3006Z	Philips Screw With Flat Washer - M3×6	
108	0720 0030Z	Retaining Ring - M3	
109	0720 0050Z	Retaining Ring - M5	
110	0313 0200Z	Philips Screw - 3×20	
111	0313 0120Z	Philips Pan Head Screw - M3×12	
112	0951 3005Z	Philips Pan Head Screw - M3×5	
113	0951 4006Z	Philips Screw With Flat Washer - M4×6	
114	1105 0016	Nylon Clip - 4N	
115	1105 0042	Binder - Harness	
116	0960 3006Z	Philips Flange Screw - M3×6	
117	0312 5050Z	Philips Pan Head Screw - M2.5×5	
118	0803 0043	Screw - M3×11	

Index No.	Part No.	Description	Q'ty Per Assembly

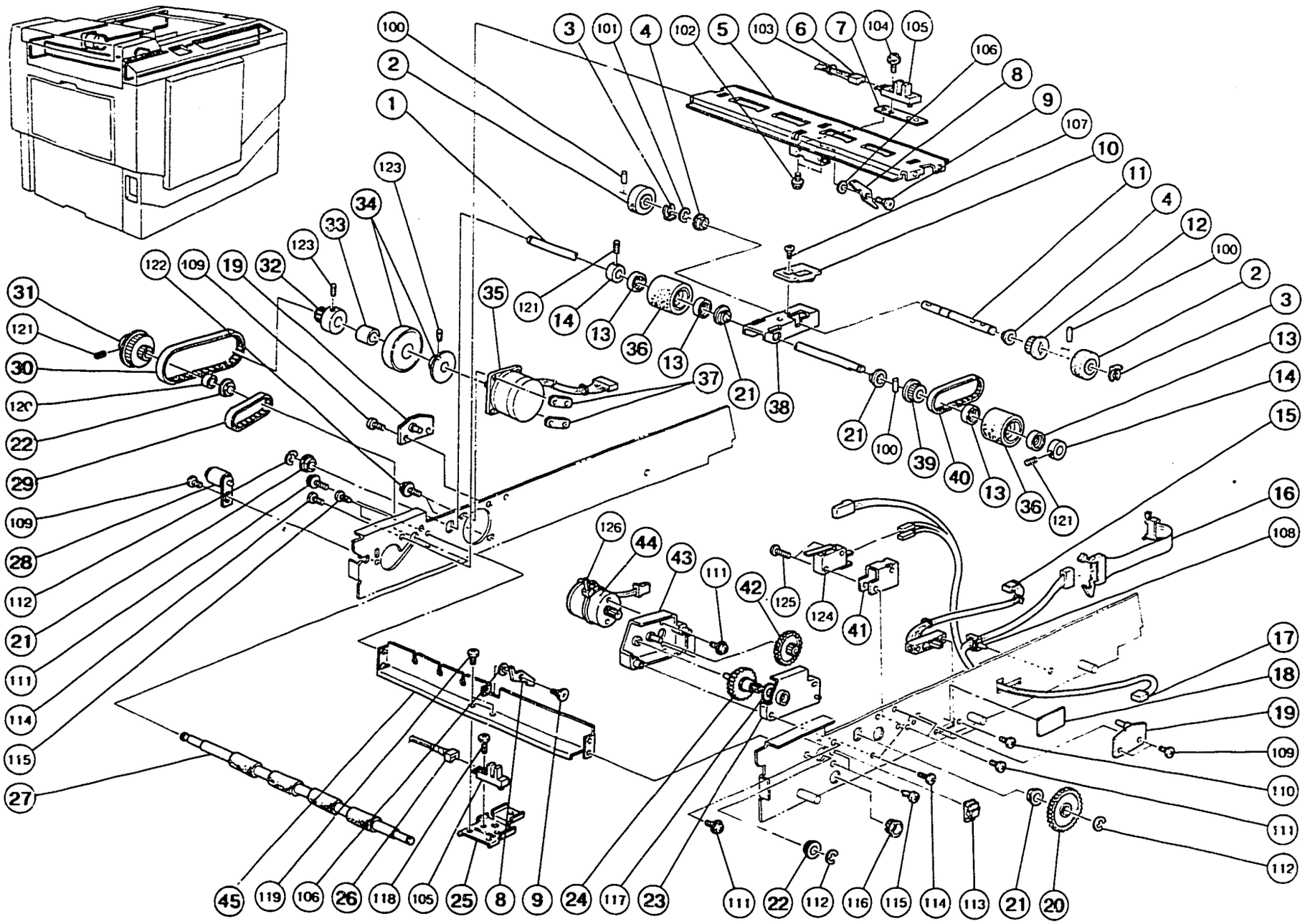
100
2
1
3
101
4
102
5
103
6
7
104
105
106
8
9
107
10
11
4
12
100
2
3
13
14
15
16
108
17
18
19
109
110
111
112
123
34
33
123
122
109
19
32
31
121
30
120
22
29
109
28
112
21
111
114
115
27
35
121
14
13
36
13
37
21
38
21
100
39
40
13
36
121
126
44
43
111
42
125
124
41
45
119
106
26
118
105
25
8
9
24
117
23
111
22
112
116
115
114
113
21
20

28. SCANNER SECTION II (SS830)

Index No.	Part No.	Description	Q'ty Per Assembly
1	C202 3011	Separation Roller Shaft	1
2	5894 2171	Original Feed Roller	2
3	5447 2681	Snap Ring	2
4	5053 0447	Bushing - M6	1
5	C201 3035	Sensor Holder Plate	1
6	C203 8085	Original Sensor Harness	1
7	C201 3074	Sensor Holder - Rear	1
8	C200 3114	Sensor Actiator	2
9	C200 3115	Shoulder Screw - Sensor Actuator	2
10	C202 3020	Pick-up Roller Spacer	1
11	C202 3017	Pick-up Roller Shaft	1
12	5918 2223	Pulley - 24T	1
13	C202 3013	Spacer - 8×16×7mm	4
14	C201 3077	Fixing Ring - 8×16×7mm	2
15	C201 8015	Image Density Switch	1
16	C202 8087	Flat Cable - ADF	1
17	C202 8086	ADF Relay Harness	1
18	C201 2545	Density Decal	1
19	C202 3022	ADF Stopper	2
20	C202 3019	Gear - 66T	1
21	5053 0223	Bushing - 8mm	4
22	5507 6624	Bushing - 8×16×45mm	2
23	C202 3031	Gear Cover	1
24	C202 3034	Coupled Gear - 16/60T	1
25	C202 3021	Sensor Stay	1
26	C203 8084	Scanner Harness	1
27	C201 3068	First Original Feed Roller	1
28	C203 3044	Tension Roller	1
29	C200 3036	Timing Belt - 100XL	1
30	C202 3025	Timing Belt - 125XL	1
31	C200 3031	Coupled Pulley - 20T & 48T	1
32	C202 3103	Pulley	1
33	C202 3102	Collar - 6.35×10×4mm	1
34	C202 3100	Motor Damper	1
35	C202 8097	Motor - DC7.2W	1
36	C202 3014	Original Feed Roller	2
37	C201 3054	Plate Nut	2
38	C202 3018	Pick-up Roller Bracket	1
39	5894 2186	Separation Roller Pulley	1
40	5894 2174	Timing Belt	1
41	C202 3026	Sensor Bracket	1
42	C202 3035	Coupled Gear - 15T/60T	1
43	C202 3032	Gear Casing	1
44	C202 3036	Motor - DC 1.69W	1
45	C203 3036	Sensor Stay	1

Index No.	Part No.	Description	Q'ty Per Assembly
100	0632 0100G	Pin 2×10mm	
101	0720 0050Z	Retaining Ring - M5	
102	0951 3005Z	Philips Pan Head Screw - M3×5	
103	1105 0042	Binder - Harness	
104	0313 0100Z	Philips Pan Head Screw - M3×10	
105	1403 0539	Photo Interruptor - EE-SX450-P1	
106	0701 0030Z	Flat Washer - M3	
107	0323 0050Z	Philips Sunken Head Screw - M3×5	
108	1105 0106	Harness Clamp	
109	0801 1004	Screw - M4×4	
110	0801 1236	Screw - M2.6×4	
111	0951 3006Z	Philips Screw With Flat Washer - M3×6	
112	0720 0060Z	Retaining Ring - M6	
113	1105 0172	Clamp	
114	0313 0060Z	Philips Pan Head Screw - M3×6	
115	0434 0080Z	Tapping Screw - M4×8	
116	1106 0411	Bushing - 11.5mm	
117	0807 5071	Spacer - 10×0.5mm	
118	0314 0100W	Philips Pan Head Screw - M4×10	
119	0313 0060W	Philips Pan Head Screw - M3×6	
120	0707 8080B	Bushing - 8×8mm	
121	0554 0040E	Allen Screw - M4×4	
122	0951 4010Z	Philips Screw With Flat Washer - M4×10	
123	0573 0040E	Hexagon Headless Set Screw - M3×4	
124	1204 1320	Switch	
125	0313 0140Z	Philips Pan Head Screw - M3×14	
126	1105 0047	TY - Wrap	

Index No.	Part No.	Description	Q'ty Per Assembly

29. SCANNER SECTION III

September 15, '88

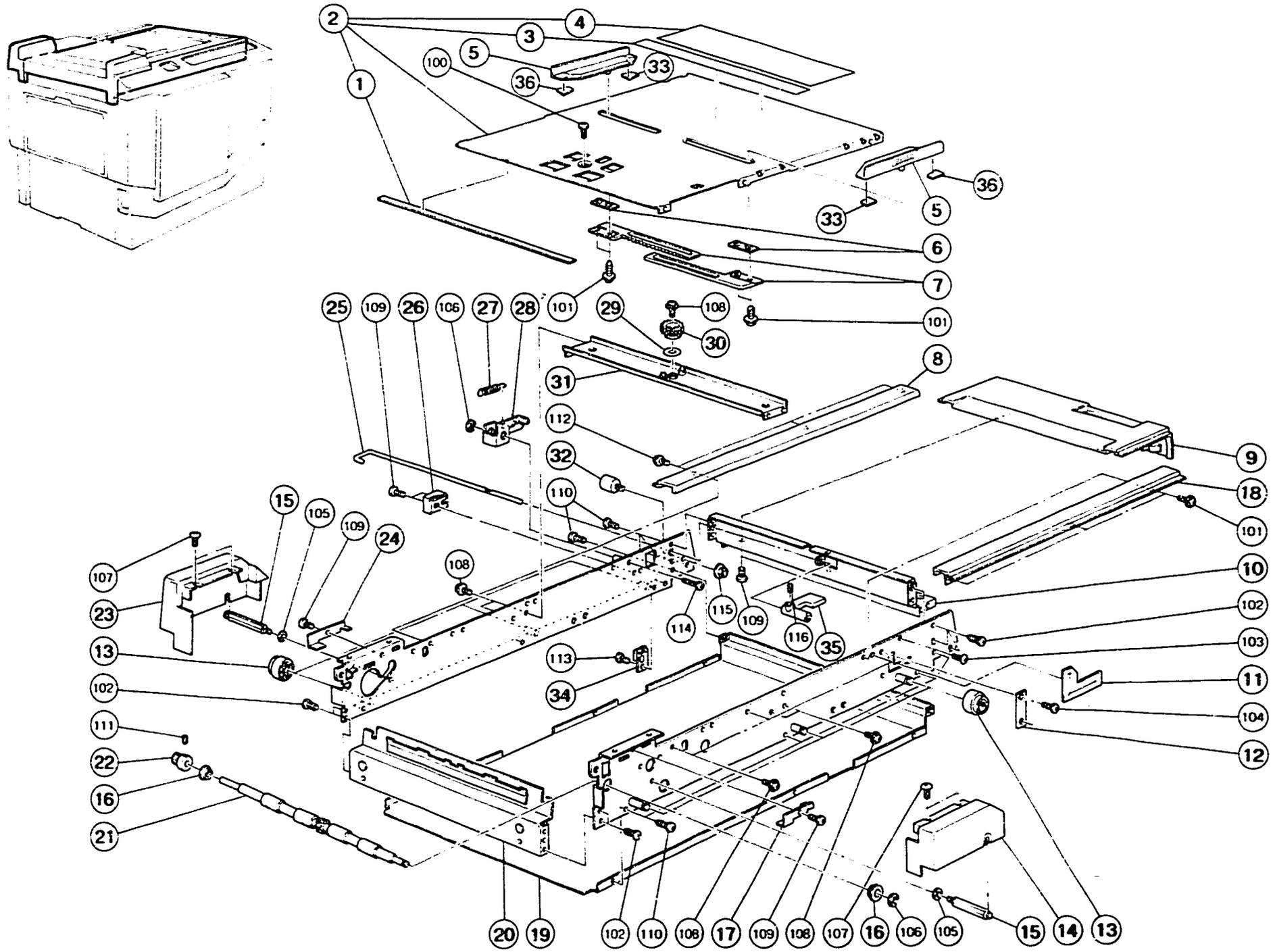

29. SCANNER SECTION III

September 15, '88

Index No.	Part No.	Description	Q'ty Per Assembly
1	C200 3015	Seal - 1x7x346mm	1
2	C201 3134 *	Original Table - LT (SS810)	1
2	C201 3135	Original Table - A4 (SS810)	1
2	C206 3134	Original Table (SS830)	1
3	C203 2733	Decal - Scale (LT)	1
3	C201 2533	Decal - Original Level (A4)	1
4	C201 2732 *	Decal - How To Operate - LT (SS810)	1
4	C201 2718 *	Decal - How To Operate - A4 (SS810)	1
4	C206 2732	Decal - How To Operate (SS830)	1
5	C203 3017	Original Guide	2
6	C203 3018	Original Guide Holder	2
7	C203 3019	Side Fence Gear	2
8	C201 3027 *	Original Table Frame (SS810)	1
8	C202 3006	Original Table Frame - Right (SS830)	1
9	C203 3135	Right Cover - Scanner	1
10	C203 3031	Grip Bracket	1
11	C200 3126	Rubber Seal	1
12	C200 3125	Clamp	1
13	C203 3014	Guide Rail Roller	6
14	C201 3025	Left Fluorescent Lamp Cover	1
15	C203 3010	Cover Stud	2
16	5507 6624	Bushing - 8x16x45mm	2
17	C200 3141 *	Left Stopper - Magnet Catch (SS810)	1
18	C201 3027 *	Original Table Frame (SS810)	1
18	C202 3005	Original Table Frame - Left (SS830)	1
19	C201 3079	Dust Shielding Cover	1
20	C203 3071	Stay - Original Exit Tray	1
21	C202 3111	Second Original Transport Roller-Lower	1
22	C200 3032	Pulley - 20T	1
23	C201 3026	Right Fluorescent Lamp Cover	1
24	C200 3142 *	Right Stopper - Magnet Catch (SS810)	1
25	C203 3033	Lock Lever- Transmission	1
26	C200 3006	Stopper	1
27	C200 3106	Lock Spring	1
28	C203 3034	Spring Arm	1

Index No.	Part No.	Description	Q'ty Per Assembly
30	C201 3011	Gear - 16T	1
31	C203 3020	Receiving Plate	1
32	C201 3004	Stopper Stud	1
33	C201 3028	Left Mylar - Original Guide	2
34	C203 3038	Safety Switch Actuator	1
35	C203 3032	Lock Lever	1
36	C201 3029	Right Mylar - Original Guide	2
100	0353 0080D	Philips Truss Head Screw - M3x8	
101	0965 3005B	Tapping Screw With Flat Washer - M3x5	
102	0434 0080Z	Tapping Screw - M4x8	
103	0343 0060D	Philips Truss Head Screw - M3x6	
104	0314 0060Z	Philips Pan Head Screw - M4x6	
105	0701 0040Z	Flat Washer - M4	
106	0720 0060Z	Retaining Ring - M6	
107	0344 0080D	Philips Truss Head Screw - M4x8	
108	0951 3006Z	Philips Screw With Flat Washer - M3x6	
109	0314 0080Z	Philips Pan Head Screw - M4x8	
110	0433 0080Z	Tapping Screw - M3x8	
111	0554 0040E	Allen Screw - M4x4	
112	0951 3005Z	Philips Pan Head Screw - M3x5	
113	0313 0050Z	Philips Pan Head Screw - M3x5	
114	0313 0200Z	Philips Screw - 3x20	
115	0713 0050B	Hexagon Nut - M5	
116	0553 0100E	Allen Screw - M3x10	

*This part number does not apply in U.S.

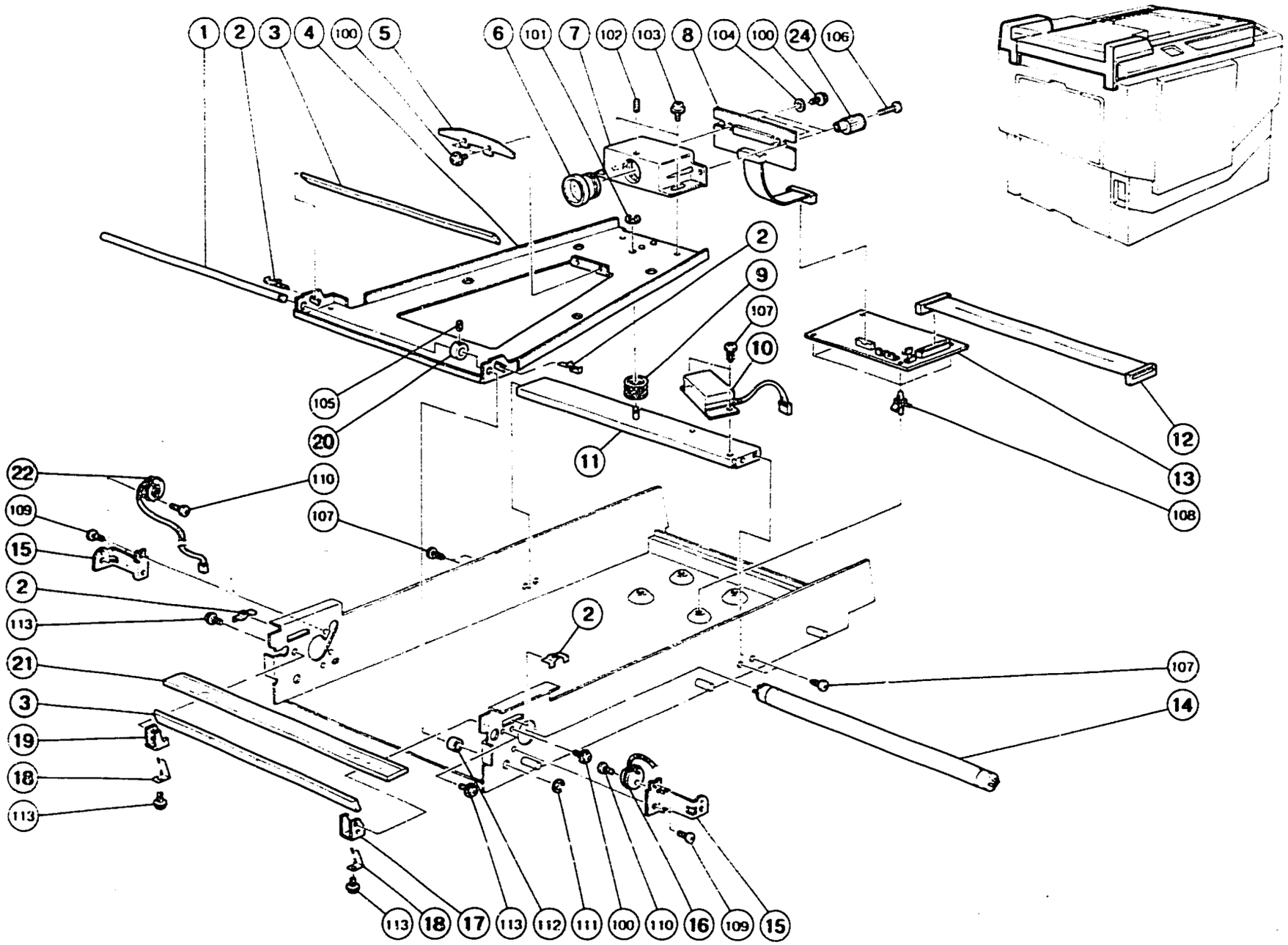
1
2
3
4
100
5
6
101
7
102
103
8
104
100
24
106
2
9
107
10
105
20
11
12
13
108
22
110
109
107
15
2
113
2
21
107
3
14
19
18
113
113
18
17
113
112
111
100
110
16
109
15

30. SCANNER SECTION IV

Index No.	Part No.	Description	Q'ty Per Assembly
1	C200 3082	Scanner Unit Shaft	1
2	C200 3072	Leaf Spring	4
3	C200 3086	Scanner Unit Mirror	2
4	5466 3147	Adjusting Knob	2
5	C201 3071	Shading Plate	1
6	C200 3091	Lens - F4.5/38	1
7	C201 3040	Lens Holder	1
8	C201 8023	CCD Board	1
9	C201 3070	Scanner Frame Spring	1
10	C200 8466	Fluorescent Lamp Stabilizer	1
11	C201 3075	Scanner Stay	1
12	C201 8102	Flat Cable - Master Processing	1
13	C201 8012	A/D Conversion Board	1
14	C200 8464	Fluorescent Lamp - 550V/15W	1
15	C200 3077	Bracket - Fluorescent Lamp Socket	2
16	C200 8502	Left Socket - Fluorescent Lamp	1
17	C201 3031	Left Mirror Holder	1
18	C201 3033	Spring Plate	2
19	C201 3032	Right Mirror Holder	1
20	C201 3077	Fixing Ring - 8×16×7mm	1
21	C201 3069	Exposure Glass	1
22	C200 8504	Right Socket - Fluorescent Lamp	1
			1

Index No.	Part No.	Description	Q'ty Per Assembly
100	0951 3006W	Philips Screw With Flat Washer - M3×6	
101	0720 0040Z	Retaining Ring - M4	
102	0553 0100E	Allen Screw - M3×10	
103	0951 4008W	Philips Screw With Flat Washer - M4×8	
104	0701 0040Z	Flat Washer - M4	
105	0554 0040E	Allen Screw - M4×4	
106	0313 0140Z	Philips Pan Head Screw - M3×14	
107	0434 0080Z	Tapping Screw - M4×8	
108	1105 0160	Clamp	
109	0314 0050Z	Philips Pan Head Screw - M4×5	
110	0313 0060Z	Philips Pan Head Screw - M3×6	
111	0720 0060Z	Retaining Ring - M6	
112	0707 8080B	Bushing - 8×8mm	
113	0951 3006Z	Philips Screw With Flat Washer - M3×6	

CONNECTOR

SYMBOL NO.	INDEX NO.
CN101	104
CN102	105
CN103	106
CN104	107
CN105	108
CN106	103
CN107	105

CAPACITOR

SYMBOL NO.	INDEX NO.
C101	159
C102	158
C103	159
C104	159
C105	160
C106	159
C107	159
C108	163
C109	163
C110	159

SYMBOL NO.	INDEX NO.
C111	159
C112	159
C113	159
C114	159
C115	159
C116	157
C117	162
C118	159
C119	159
C120	160

SYMBOL NO.	INDEX NO.
C121	160
C122	159
C123	159
C124	159
C125	159
C126	156
C127	159
C128	156
C129	159
C130	156

SYMBOL NO.	INDEX NO.
C131	159
C132	156
C133	159
C134	159
C135	159
C136	159
C137	159
C138	159
C139	159
C140	158

SYMBOL NO.	INDEX NO.
C141	158
C142	158
C143	161
C144	162
C145	159
C146	159
C147	158
C148	155
C149	159
C150	154

DIODE ARRAY

SYMBOL NO.	INDEX NO.
DAY101	120
DAY102	120
DAY103	120
DAY104	120
DAY105	120
DAY106	120
DAY107	120
DAY108	120

DIP SW

SYMBOL NO.	INDEX NO.
DPS101	111

DIODE

SYMBOL NO.	INDEX NO.
D101	119
D102	121
D103	119
D104	119
D105	119
D106	119
D107	119
D108	119
D109	119
D110	119

SYMBOL NO.	INDEX NO.
D111	119

IC

SYMBOL NO.	INDEX NO.
IC101	135
IC102	127
IC103	123
IC104	110
	134
IC105	110
	133
IC106	137
IC107	132
IC108	115

SYMBOL NO.	INDEX NO.
IC109	126
IC110	127
IC111	129
IC112	131
IC113	141
IC114	136
IC115	136
IC116	127
IC117	123
IC118	123

SYMBOL NO.	INDEX NO.
IC119	109
IC120	138
IC121	126
IC122	130
IC123	140
IC124	124
IC125	139
IC126	125
IC127	129
IC128	115

SYMBOL NO.	INDEX NO.
IC129	128

LED

SYMBOL NO.	INDEX NO.
LED101	122
LED102	122
LED103	122
LED104	122

COIL

SYMBOL NO.	INDEX NO.
L101	164

OSCILLATOR

SYMBOL NO.	INDEX NO.
OSC101	142

TRANSISTOR

SYMBOL NO.	INDEX NO.
Q101	118
Q102	113
Q103	112
Q104	114
Q105	118

RESISTOR ARRAY

SYMBOL NO.	INDEX NO.
RAY101	145
RAY102	151
RAY103	146
RAY104	146
RAY105	146
RAY106	148
RAY107	150
RAY108	150
RAY109	147
RAY110	148

RECTIFIER

SYMBOL NO.	INDEX NO.
RAY111	147
RAY112	147
RAY113	147
RAY114	149

RESISTOR

SYMBOL NO.	INDEX NO.
R101	169
R102	186
R103	186
R104	186
R105	186
R106	144
R107	144
R108	144
R109	144
R110	179

SYMBOL NO.	INDEX NO.
R111	166
R112	144
R113	144
R114	194
R115	168
R116	175
R117	198
R118	198
R119	203
R120	204

SYMBOL NO.	INDEX NO.
R121	204
R122	200
R123	198
R124	185
R125	185
R126	194
R127	190
R128	181
R129	196
R130	166

SYMBOL NO.	INDEX NO.
R131	194
R132	184
R133	184
R134	143
R135	143
R136	143
R137	143
R138	143
R139	143
R140	143

SYMBOL NO.	INDEX NO.
R141	143
R142	204
R143	204
R144	204
R145	204
R146	204
R147	204
R148	204
R149	204
R150	176

SYMBOL NO.	INDEX NO.
R151	189
R152	184
R153	184
R154	166
R155	191
R156	177
R157	178
R158	180
R159	188
R160	181

SYMBOL NO.	INDEX NO.
R161	184
R162	173
R163	202
R164	202
R165	172
R166	188
R167	186
R168	193
R169	192
R170	192

SYMBOL NO.	INDEX NO.
R171	192
R172	193
R173	160
R174	178
R175	175
R176	165
R177	193
R178	193
R179	193
R180	174

SYMBOL NO.	INDEX NO.
R181	193
R182	172
R183	205
R184	166
R185	169
R186	171
R187	182
R188	165
R189	178
R190	166

SYMBOL NO.	INDEX NO.
R191	167
R192	201
R193	199
R194	168
R195	170
R196	195
R197	180
R198	197
R199	190
R200	187

SYMBOL NO.	INDEX NO.
R201	159
R202	178
R203	178
R204	178
R205	183

TAY

SYMBOL NO.	INDEX NO.
TAY101	116
TAY102	116
TAY103	117

TP

SYMBOL NO.	INDEX NO.
TP	162

POTENTIOMETER

SYMBOL NO.	INDEX NO.
VR101	152
VR102	153
VR103	153

31. EDITING CONTROL BOARD

Index No.	Part No.	Description	Q'ty Per Assembly
*	C206 8042	Main Control Board	1

Index No.	Part No.	Description	Q'ty Per Assembly
102	1101 0328	Connector Pin Contact	
103	1102 2307	Connector - 20P	
104	1102 2845	Connector - 16P	
105	1102 2846	Connector - 26P	
106	1102 2852	Connector - 34P	
107	1102 2853	Connector - 40P	
108	1103 0740	Connector - 6P	
109	1104 0342	IC Socket - 28P	
110	1106 0258	Tube - White - 2.0×0.25 - UL	
111	1204 1326	DIP Switch	
112	1400 0100	Transistor - 2SA683	
113	1400 0282	Transistor - 2SC2308	
114	1400 0441	Transistor - RN1211	
115	1401 0192	IC - μPA2003C	
116	1401 0342	Transistor Array - STA421A	
117	1401 0400	Transistor Array - SLA4060	
118	1401 0401	Transistor - 2SD1194	
119	1401 0611	Diode - 1S1588	
120	1401 0807	Diode Array	
121	1402 0110	Diode - V06C	
122	1403 0255	LED - GL-3AR2	
123	1407 0577	IC - SN7406N	
124	1407 0647	IC - TC4024P	
125	1407 0658	IC - TC4051BP	
126	1407 0972	IC - HD74LS42P	
127	1407 0975	IC - HD7407P	
128	1407 0981	IC - TD62503P	
129	1407 1016	IC - UPD8255AC-5	
130	1407 1026	IC - SN74LS373N	
131	1407 1151	IC - D-8085AC-2	
132	1407 1154	IC - UPD8279C-5	
133	1407 1837	IC - STK6962H	
134	1407 1838	IC - STK6972H	
135	1407 1919	IC - TMP8155-P2	
136	1408 0115	IC - μPC339C	

Index No.	Part No.	Description	Q'ty Per Assembly
137	1408 0329	IC - MPC358C	
138	1408 0418	IC - PST519A	
139	1408 0471	IC - TCA955	
140	1408 0547	IC - NJM2904S	
141	1408 0592	IC - IR3702	
142	1503 0028	Ceramic Oscillator - 6MHz	
143	1600 1095	Resistor - 120Ω 1/8W ±5%	
144	1600 1096	Resistor - 1KΩ 1T+5%	
145	1601 7367	Resistor Array - 330Ω	
146	1601 7374	Resistor Array - 4.7KΩ	
147	1601 7376	Resistor Array - 10KΩ ±5% 1/8W	
148	1601 7377	Resistor Array - 15KΩ ±5% 1/8W	
149	1601 7378	Resistor Array - 22KΩ ±5% 1/8W	
150	1601 7404	Resistor Array - 10KΩ 1/2W	
151	1601 7566	Resistor Array - 22KΩ ±5% 1/8W	
152	1601 8147	Variable Resistor - 10KΩ 0.5W	
153	1601 8157	Variable Resistor - 100KΩ	
154	1604 0861	Capacitor - 10μF 50V	
155	1604 0903	Capacitor - 10μF 35V	
156	1604 1196	Capacitor - 100μF 50V	
157	1606 0995	Capacitor - 10PF 50V	
158	1606 0997	Capacitor - 1000PF 50V	
159	1606 0998	Capacitor - 0.01μF 50V	
160	1606 1636	Capacitor - 0.0022μF 100V	
161	1606 1637	Capacitor - 0.015μF 100V	
162	1606 1638	Capacitor - 0.22MF 50V	
163	1606 1640	Capacitor - 0.033μF 100V	
164	1607 0001	Coil - SN-8S-500	
165	1611 4102	Resistor - 1KΩ 1/4T ±5%	
166	1611 4103	Resistor - 10KΩ 1/4T ±5%	
167	1611 4104	Resistor - 100KΩ 1/4T ±5%	
168	1611 4113	Resistor - 11KΩ 1/4W ±5%	
169	1611 4122	Resistor - 1.2KΩ 1/4T ±5%	
170	1611 4123	Resistor - 12KΩ 1/4T ±5%	
171	1611 4124	Resistor - 120KΩ 1/4T ±5%	

Index No.	Part No.	Description	Q'ty Per Assembly
172	1611 4133	Resistor - 13KΩ 1/4T ±5%	
173	1611 4151	Resistor - 150Ω 1/4T ±5%	
174	1611 4152	Resistor - 1.5KΩ 1/4T ±5%	
175	1611 4202	Resistor - 2KΩ 1/4T ±5%	
176	1611 4203	Resistor - 20KΩ 1/4T	
177	1611 4221	Resistor - 220Ω 1/4T ±5%	
178	1611 4223	Resistor - 22KΩ 1/4T ±5%	
179	1611 4241	Resistor - 240Ω 1/4T ±5%	
180	1611 4243	Resistor - 24KΩ 1/4T ±5%	
181	1611 4244	Resistor - 240Ω 1/4T ±5%	
182	1611 4302	Resistor - 3.0KΩ 1/4T ±5%	
183	1611 4330	Resistor - 330Ω 1/4T ±5%	
184	1611 4332	Resistor - 3.3KΩ 1/4T ±5%	
185	1611 4334	Resistor - 330KΩ 1/4T ±5%	
186	1611 4361	Resistor - 360Ω 1/4T ±5%	
187	1611 4362	Resistor - 3.6KΩ 1/4W	
188	1611 4392	Resistor - 3.9KΩ 1/4T ±5%	
189	1611 4393	Resistor - 39KΩ 1/4T ±5%	
190	1611 4432	Capacitor - 4.3Ω 1/4W	
191	1611 4470	Resistor - 47Ω 1/4T ±5%	
192	1611 4471	Resistor - 470Ω 1/4T ±5%	
193	1611 4472	Resistor - 4.7KΩ 1/4T ±5%	
194	1611 4473	Resistor - 47KΩ 1/4T ±5%	
195	1611 4513	Resistor - 51KΩ 1/4T	
196	1611 4514	Resistor - 510KΩ 1/4T ±5%	
197	1611 4562	Resistor - 5.6KΩ 1/4T ±5%	
198	1611 4683	Resistor - 68KΩ 1/4T ±5%	
199	1611 4752	Resistor - 7.5KΩ 1/4W ±5%	
200	1611 4822	Resistor - 8.2KΩ 1/4T ±5%	
201	1611 4823	Resistor - 82KΩ 1/4T ±5%	
202	1611 4824	Resistor - 820KΩ	
203	1611 6102	Resistor - 1KΩ 1/2T ±5%	
204	1611 6331	Resistor - 330Ω 1/2T	
205	1611 6361	Resistor - 360Ω 1/8T ±5%	

CONNECTOR

SYMBOL NO	INDEX NO
CN101	103
CN102	104
CN103	105
CN104	106
CN105	107
CN106	102

CAPACITOR

SYMBOL NO	INDEX NO
C100	154
C101	151
C102	154
C103	154
C104	156
C105	154
C106	153
C107	150
C108	157
C109	153

SYMBOL NO	INDEX NO
C110	153
C111	154
C112	153
C113	154
C114	154
C115	157
C116	151
C119	154

SYMBOL NO	INDEX NO
C120	154
C121	154
C122	151
C123	154
C124	151
C125	154
C126	154
C127	154
C128	154
C129	155

SYMBOL NO	INDEX NO
C130	153
C131	154
C132	155
C133	158
C134	154
C135	155
C136	154
C137	154
C138	154
C139	154

SYMBOL NO	INDEX NO
C140	154
C141	154
C142	154
C143	153
C144	154
C145	152
C146	149

DIODE ARRAY

SYMBOL NO.	INDEX NO.
DAY101	116
DAY102	116
DAY103	116
DAY104	116
DAY105	116
DAY106	116
DAY107	116
DAY108	116

DIP SW

SYMBOL NO	INDEX NO
DPS101	110
DPS102	109

DIODE

SYMBOL NO	INDEX NO
D101	115
D102	115
D103	115
D104	115
D105	115
D106	115
D107	115
D108	117
D109	115

IC

SYMBOL NO.	INDEX NO.
IC101	124
IC102	125
IC103	121
IC104	135
IC105	120
IC106	134
IC107	127
IC108	112
IC109	132
IC110	133

SYMBOL NO.	INDEX NO.
IC111	122
IC112	123
IC113	132
IC114	137
IC115	108
IC116	126
IC117	123
IC118	122
IC119	128
IC120	130

SYMBOL NO.	INDEX NO.
IC121	123
IC122	131
IC123	112
IC124	129
IC125	119
IC126	136

LED

SYMBOL NO.	INDEX NO.
LED101	118
LED102	118
LED103	118
LED104	118

COIL

SYMBOL NO.	INDEX NO.
L1	159

OSCILATOR

SYMBOL NO.	INDEX NO.
OSC101	138

TRANSISTOR

SYMBOL NO.	INDEX NO.
Q101	114
Q102	114
Q103	114
Q104	113
Q105	113
Q106	113
Q107	113
Q108	113
Q109	113
Q110	113

SYMBOL NO	INDEX NO.
Q111	113
Q112	111

RESISTOR ARRAY

SYMBOL NO.	INDEX NO.
RAY101	145
RAY102	142
RAY103	143
RAY104	143
RAY105	144
RAY106	146
RAY107	142
RAY108	142
RAY109	143
RAY110	143

SYMBOL NO	INDEX NO.
RAY111	146
RAY112	144
RAY113	141

RESISTOR

SYMBOL NO.	INDEX NO.
R101	192
R102	186
R103	183
R104	166
R105	190
R106	177
R107	194
R108	173
R109	173
R110	173

SYMBOL NO.	INDEX NO.
R111	201
R112	167
R113	179
R114	176
R115	185
R116	174
R117	160
R118	165
R119	195
R120	189

SYMBOL NO.	INDEX NO
R121	181
R122	181
R123	193
R124	196
R125	162
R126	187
R128	188
R129	171
R130	185
R131	170

SYMBOL NO.	INDEX NO.
R132	173
R133	161
R134	191
R135	189
R136	178
R137	170
R138	177
R139	188
R142	188
R143	177

SYMBOL NO.	INDEX NO.
R144	184
R145	198
R146	169
R147	180
R148	180
R149	193
R150	173
R151	184
R152	198
R153	169

SYMBOL NO.	INDEX NO.
R154	180
R155	180
R156	193
R157	200
R158	200
R159	200
R160	200
R161	200
R162	200
R163	200

SYMBOL NO.	INDEX NO.
R164	200
R165	139
R166	180
R167	140
R168	140
R169	180
R171	140
R172	140
R173	139
R174	139

SYMBOL NO.	INDEX NO.
R175	139
R176	139
R177	139
R178	139
R179	139
R180	182
R181	182
R182	140
R183	140
R184	182

SYMBOL NO	INDEX NO.
R186	182
R187	175
R188	200
R189	200
R190	199
R191	162
R192	189
R193	164
R196	172
R197	197

SYMBOL NO.	INDEX NO.
R198	168
R199	163
R200	182

TP

SYMBOL NO.	INDEX NO.
TP	101

POTENTIOMETER

SYMBOL NO.	INDEX NO.
VR101	147
VR102	148
VR103	148

32. MAIN CONTROL BOARD (SS830)

Index No.	Part No.	Description	Q'ty Per Assembly
*	C2068042	Main Control Board	1
1	C2068045	IC - TMM24128 AP-20	1
101	1101 0328	Connector Pin Contact	
102	1102 2307	Connector - 20P	
103	1102 2845	Connector - 16P	
104	1102 2846	Connector - 26P	
105	1102 2852	Connector - 34P	
106	1102 2853	Connector - 40P	
107	1103 0740	Connector - 6P	
108	1104 0412	Socket - 28P	
109	1204 1541	DIP Switch	
110	1204 1542	DIP Switch	
111	1400 0282	Transistor - 2SC2308	
112	1401 0192	IC - μPA2003C	
113	1401 0280	Transistor - 2SB731	
114	1401 0367	Transistor - 2SD635	
115	1401 0611	Diode - 1S1588	
116	1401 0807	Diode Array	
117	1402 0110	Diode - V06C	
118	1403 0255	LED - GL-3AR2	
119	1407 0577	IC - SN7406N	
120	1407 0647	IC - TC4024P	
121	1407 0658	IC - TC4051BP	
122	1407 0972	IC - HD74LS42P	
123	1407 0975	IC - HD7407P	
124	1407 0981	IC - TD62503P	
125	1407 1016	IC - UPD8255AC-5	
126	1407 1026	IC - SN74LS373N	
127	1407 1151	IC - D-8085AC-2	
128	1407 1154	IC - UPD8279C-5	
129	1407 1837	IC - STK6962H	
130	1407 1838	IC - STK6972H	
131	1407 1919	IC - TMM98155-P2	
132	1408 0115	IC - μPC339C	
133	1408 0329	IC - MPC358C	
134	1408 0418	IC - PST519A	
135	1408 0471	IC - TCA955	
136	1408 0547	IC - NJM2904S	
137	1408 0592	IC - IR3702	
138	1503 0028	Ceramic Oscillator - 6MHz	
139	1600 1095	Resistor - 120Ω 1/8W ±5%	
140	1600 1096	Resistor - 1KΩ 1T+5%	
141	1601 7367	Resistor Array - 330Ω	
142	1601 7374	Resistor Array - 4.7KΩ	
143	1601 7376	Resistor Array - 10KΩ ±5% 1/8W	
144	1601 7377	Resistor Array - 15KΩ ±5% 1/8W	
145	1601 7378	Resistor Array - 22KΩ ±5% 1/8W	
146	1601 7404	Resistor Array - 10KΩ 1/2W	
147	1601 8147	Variable Resistor - 10KΩ 0.5W	
148	1601 8157	Variable Resistor - 100KΩ	
149	1604 0861	Capacitor - 10μF 50V	
150	1604 0903	Capacitor - 10μF 35V	
151	1604 1196	Capacitor - 100μF 50V	
152	1606 0995	Capacitor - 10PF 50V	
153	1606 0997	Capacitor - 1000PF 50V	
154	1606 0998	Capacitor - 0.01μF 50V	
155	1606 1636	Capacitor - 0.0022μF 100V	
156	1606 1637	Capacitor - 0.015μF 100V	
157	1606 1638	Capacitor - 0.22MF 50V	
158	1606 1640	Capacitor - 0.033μF 100V	
159	1607 0001	Coil - SN-8S-500	
160	1611 4102V	Resistor - 1KΩ 1/4V ±5%	
161	1611 4103	Resistor - 10KΩ 1/4T ±5%	
162	1611 4103V	Resistor - 10KΩ 1/4V ±5%	
163	1611 4104V	Resistor - 100KΩ 1/4W ±5%	
164	1611 4113	Resistor - 11KΩ 1/4W ±5%	
165	1611 4113V	Resistor - 11KΩ ±5% 1/4W	
166	1611 4123	Resistor - 12KΩ 1/4T ±5%	

Index No.	Part No.	Description	Q'ty Per Assembly
167	1611 4124	Resistor - 120KΩ 1/4T ±5%	
168	1611 4133V	Resistor - 13KΩ 1/4W ±5%	
169	1611 4151	Resistor - 150Ω 1/4T ±5%	
170	1611 4202	Resistor - 2KΩ 1/4T ±5%	
171	1611 4203	Resistor - 20KΩ 1/4T	
172	1611 4221	Resistor - 220Ω 1/4T ±5%	
173	1611 4223	Resistor - 22KΩ 1/4T ±5%	
174	1611 4223V	Resistor - 22KΩ 1/4V ±5%	
175	1611 4241	Resistor - 240Ω 1/4T ±5%	
176	1611 4242	Resistor - 2.4KΩ 1/4T ±5%	
177	1611 4243	Resistor - 24KΩ 1/4T ±5%	
178	1611 4244	Resistor - 240Ω 1/4T ±5%	
179	1611 4302	Resistor - 3.0KΩ 1/4T ±5%	
180	1611 4332	Resistor - 3.3KΩ 1/4T ±5%	
181	1611 4334	Resistor - 330KΩ 1/4T ±5%	
182	1611 4361	Resistor - 360Ω 1/4T ±5%	
183	1611 4362	Resistor - 3.6KΩ 1/4W	
184	1611 4392	Resistor - 3.9KΩ 1/4T ±5%	
185	1611 4393	Resistor - 39KΩ 1/4T ±5%	
186	1611 4432	Capacitor - 4.3Ω 1/4W	
187	1611 4470V	Resistor - 47Ω 1/4W ±5%	
188	1611 4471	Resistor - 470Ω 1/4T ±5%	
189	1611 4473	Resistor - 47KΩ 1/4T ±5%	
190	1611 4513	Resistor - 51KΩ 1/4T	
191	1611 4514	Resistor - 510KΩ 1/4T ±5%	
192	1611 4562	Resistor - 5.6KΩ 1/4T ±5%	
193	1611 4683	Resistor - 68KΩ 1/4T ±5%	
194	1611 4752	Resistor - 7.5KΩ 1/4W ±5%	
195	1611 4752V	Resistor - 7.5KΩ 1/2W ±5%	
196	1611 4822	Resistor - 8.2KΩ 1/4T ±5%	
197	1611 4823V	Resistor - 82KΩ 1/4W ±5%	
198	1611 4824	Resistor - 820KΩ	
199	1611 6102	Resistor - 1KΩ 1/2T ±5%	
200	1611 6331	Resistor - 330Ω 1/2T	
201	1611 6361	Resistor - 360Ω 1/8T ±5%	

Index No.	Part No.	Description	Q'ty Per Assembly

CONNECTOR

SYMBOL NO.	INDEX NO.
CN401	102
CN402	103
CN403	104
CN404	106
CN405	105

CAPACITOR

SYMBOL NO.	INDEX NO.
C400	146
C401	146
C402	146
C403	146
C404	146
C405	146
C406	146
C407	146
C408	146
C409	146

SYMBOL NO.	INDEX NO.
C410	146
C411	146
C413	144
C414	144
C418	141
C419	141
C420	143
C421	143
C422	146
C423	146

SYMBOL NO.	INDEX NO.
C424	146
C425	146
C426	146
C427	146
C428	146
C429	146
C430	146
C431	146
C432	146
C433	146

SYMBOL NO.	INDEX NO.
C434	146
C435	146
C436	146
C437	143
C438	146
C439	146
C440	146
C441	146
C442	146
C443	146

SYMBOL NO.	INDEX NO.
C444	146
C445	146
C446	146
C447	146
C448	146
C449	146
C450	146
C451	146
C452	146
C453	146

SYMBOL NO.	INDEX NO.
C454	146
C455	146
C456	141
C457	141
C458	143
C459	143
C460	143
C461	143
C462	143
C463	143

SYMBOL NO.	INDEX NO.
C464	143
C465	143
C466	143
C467	143
C468	146
C469	145
C470	145
C471	140
C472	142
C473	143

SYMBOL NO.	INDEX NO.
C474	143

DIP SW

SYMBOL NO.	INDEX NO.
DPS400	108

TEST PIN

SYMBOL NO.	INDEX NO.
TP400	101
TP401	101

DIODE

SYMBOL NO.	INDEX NO.
D400	110
D403	110
D404	110
D405	110
D407	110
D408	110
D411	110
D412	110
D413	110
D414	110

SYMBOL NO.	INDEX NO.
D415	110
D416	110
D417	111
D418	111
D419	111
D420	111
D421	111
D422	111
D423	111
D424	111

IC

SYMBOL NO.	INDEX NO.
IC400	113
IC401	121
IC402	117
IC403	125
IC404	113
IC405	116
IC406	120
IC407	120
IC408	120
IC409	115

SYMBOL NO.	INDEX NO.
IC410	115
IC411	123
IC412	114
IC413	118
IC414	116
IC415	118
IC416	131
IC417	130
IC418	128
IC419	128

SYMBOL NO.	INDEX NO.
IC420	128
IC421	114
IC422	113
IC423	121
IC424	118
IC425	117
IC426	113
IC427	126
IC428	132
IC429	117

SYMBOL NO.	INDEX NO.
IC430	114
IC431	113
IC432	121
IC433	133
IC434	133
IC435	133
IC436	131
IC437	120
IC438	120
IC439	120

SYMBOL NO.	INDEX NO.
IC440	112
IC441	131
IC442	126
IC443	126
IC444	128
IC445	132
IC446	117
IC447	127
IC448	117
IC449	126

SYMBOL NO.	INDEX NO.
IC450	126
IC451	121
IC452	121
IC453	121
IC454	112
IC455	127
IC456	129
IC457	116
IC458	113
IC459	118

SYMBOL NO.	INDEX NO.
IC460	120
IC461	132
IC462	123
IC463	122
IC464	117
IC465	126
IC466	126
IC467	125
IC468	121
IC469	121

SYMBOL NO.	INDEX NO.
IC470	118
IC471	117
IC472	125
IC473	116
IC474	112
IC475	120
IC476	120
IC477	119
IC478	119
IC479	119

SYMBOL NO.	INDEX NO.
IC480	1
(ROM)	1
(SOCKET)	107
IC481	113
IC482	113
IC483	124
IC484	124
IC485	112

COIL

SYMBOL NO.	INDEX NO.
L400	147

OSCILATOR

SYMBOL NO.	INDEX NO.
OSC400	135

TRANSISTOR

SYMBOL NO.	INDEX NO.
Q400	134

RESISTOR ARRAY

SYMBOL NO.	INDEX NO.
RAY400	138
RAY401	137
RAY402	138
RAY403	137
RAY404	139
RAY405	139
RAY406	138
RAY407	138

RESISTOR

SYMBOL NO.	INDEX NO.
R400	148
R401	136
R402	136
R403	149
R404	150

TRANSISTOR ARRAY

SYMBOL NO.	INDEX NO.
TA400	109
TA401	109

33. MASTER PROCESSING CONTROL BOARD–LT

September 15, '88

Index No.	Part No.	Description	Q'ty Per Assembly
*	C201 8069	Master Processing Control Board - LT	1
1	C201 8004	IC - TMM24128 AP-20	1
101	1101 0328	Connector Pin Contact	
102	1102 0813	Terminal	
103	1102 2845	Connector - 16P	
104	1102 2853	Connector - 40P	
105	1103 0507	Connector - 6P	
106	1103 0511	Connector - 11P	
107	1104 0412	Socket - 28P	
108	1204 1543	DIP Switch	
109	1401 0399	Transistor Array	
110	1401 0611	Diode - 1S1588	
111	1405 0168	Diode IN 4003	
112	1407 0536	IC - SN74LS51N	
113	1407 0539	IC - SN74LS04	
114	1407 0542	IC - SN74LS00	
115	1407 0604	IC - TC4049P	
116	1407 0610	IC - SN74LS32N	
117	1407 0614	IC - SN74LS74N	
118	1407 0621	IC - SN74LS08N	
119	1407 0623	IC - SN74LS175N	
120	1407 0699	IC - SN74LS161AN	
121	1407 0700	IC - SN74LS174N	
122	1407 0744	IC - SN74LS158N	
123	1407 0760	IC - SN74LS14N	
124	1407 0762	IC - DM74LS42N	
125	1407 0774	IC - SN74LS393N	
126	1407 0777	IC - SN74LS153N	
127	1407 0814	IC - SN74LS139N	
128	1407 0816	IC - SN74LS157N	
129	1407 0817	Ttlic - SN74LS279N	
130	1407 0819	IC - SN74LS366AN	
131	1407 0887	IC - SN74LS244N	
132	1407 1149	IC - SN74LS194AN	
133	1407 1735	IC - μPD4346C-15L	
134	1408 0408	IC - PST518A	
135	1503 0141	Oscilator - CSA6.55MS11	
136	1600 1094	Resistor - 20Ω ±10%	
137	1601 7352	Resistor Array - 4.7KΩ	
138	1601 7374	Resistor Array - 4.7KΩ	
139	1601 7391	Resistor Array - 680Ω	
140	1604 0983	Resistor - 120Ω 1/8W ±5%	
141	1604 1237	Capacitor - 3.3μF	
142	1606 0217	Capacitor - 0.1μF 25V	
143	1606 0684	Capacitor - 0.001μF 50V	
144	1606 0693	Capacitor - 220PF 50V	
145	1606 0996	Capacitor - 470PF 25V	
146	1606 0998	Capacitor - 0.01μF 50V	
147	1607 0140	Coil - Sbc - 05	
148	1611 4102	Resistor - 1KΩ 1/4T ±5%	
149	1611 4222	Resistor - 2.2KΩ 1/4T ±5%	
150	1611 4472	Resistor - 4.7KΩ 1/4T ±5%	

34. MASTER PROCESSING CONTROL BOARD—A4

September 15, '88

CONNECTOR

SYMBOL NO.	INDEX NO.
CN401	101
CN402	102
CN403	103
CN404	105
CN405	104

RESISTOR ARRAY

SYMBOL NO.	INDEX NO.
RAY400	138
RAY401	137
RAY402	138
RAY403	137
RAY404	139
RAY405	139
RAY406	138

RESISTOR

SYMBOL NO.	INDEX NO.
R400	145
R401	147
R402	136
R403	136
R404	146
R405	147

TEST PIN

SYMBOL NO.	INDEX NO.
TP400	100
TP401	100

OSCILATOR

SYMBOL NO.	INDEX NO.
OSC400	135

DIP SW

SYMBOL NO.	INDEX NO.
DPS400	107

TRANSISTOR ARRAY

SYMBOL NO.	INDEX NO.
TA400	108
TA401	108

DIODE

SYMBOL NO.	INDEX NO.
D407	109
D408	109
D416	109
D417	109
D421	109
D422	109
D423	109
D424	109
D425	109
D426	109

VARIABLE RESISTOR

SYMBOL NO.	INDEX NO.
D427	109
D428	109
D429	109
D430	109
D431	109
D432	109
D433	109
D434	109
D435	109
D436	109

IC

SYMBOL NO.	INDEX NO.
D437	109
D438	110
D439	110
D440	110
D441	110
D442	110
D443	110
D444	110
D445	110

SYMBOL NO.	INDEX NO.
IC400	112
IC401	120
IC402	116
IC403	124
IC404	112
IC405	115
IC406	119
IC407	119
IC408	119
IC409	114

SYMBOL NO.	INDEX NO.
IC410	114
IC411	122
IC412	113
IC413	117
IC414	115
IC415	117
IC416	131
IC417	129
IC418	127
IC419	127

SYMBOL NO.	INDEX NO.
IC420	127
IC421	113
IC422	112
IC423	120
IC424	117
IC425	116
IC426	125
IC427	132
IC428	116
IC429	113

SYMBOL NO.	INDEX NO.
IC430	112
IC431	120
IC432	133
IC433	133
IC434	133
IC435	130
IC436	119
IC437	119
IC438	119
IC439	111

SYMBOL NO.	INDEX NO.
IC440	130
IC441	125
IC442	125
IC443	127
IC444	132
IC445	116
IC446	126
IC447	116
IC448	125
IC449	125

SYMBOL NO.	INDEX NO.
IC450	120
IC451	120
IC452	120
IC453	111
IC454	126
IC455	128
IC456	115
IC457	112
IC458	117
IC459	119

SYMBOL NO.	INDEX NO.
IC460	132
IC461	122
IC462	121
IC463	116
IC464	125
IC465	125
IC466	124
IC467	120
IC468	120
IC469	117

SYMBOL NO.	INDEX NO.
IC470	116
IC471	124
IC472	115
IC473	111
IC474	119
IC475	119
IC476	118
IC477	118
IC478	118

SYMBOL NO.	INDEX NO.
IC479	
(ROM)	1
(SOCKET)	106
IC480	112
IC481	112
IC482	123
IC483	123

CAPACITOR

SYMBOL NO.	INDEX NO.
C400	142
C401	142
C402	142
C403	142
C404	142
C405	142
C406	142
C407	142
C408	142
C409	142

SYMBOL NO.	INDEX NO.
C410	142
C411	142
C412	143
C413	141
C414	141
C415	143
C416	142
C417	143
C418	142
C419	143

SYMBOL NO.	INDEX NO.
C420	142
C421	143
C422	142
C423	142
C424	142
C425	142
C426	142
C427	142
C428	142
C429	142

SYMBOL NO.	INDEX NO.
C430	142
C431	142
C432	142
C433	142
C434	142
C435	140
C436	142
C437	142
C438	142
C439	142

SYMBOL NO.	INDEX NO.
C440	142
C441	142
C442	142
C443	142
C444	142
C445	142
C446	142
C447	142
C448	142
C449	142

SYMBOL NO.	INDEX NO.
C450	142
C451	142
C452	141
C453	141
C454	143
C455	143
C456	143
C457	143
C458	143
C459	143

SYMBOL NO.	INDEX NO.
C460	143
C461	143
C462	143
C463	143
C464	142
C465	144
C466	144

TRANSISTOR

SYMBOL NO.	INDEX NO.
Q400	134

34. MASTER PROCESSING CONTROL BOARD–A4

Index No.	Part No.	Description	Q'ty Per Assembly
*	C201 8002	Master Processing Control Board - A4	1
1	C201 8004	IC - TMM24128 AP-20	1
100	1101 0328	Connector Pin Contact	
101	1102 0813	Terminal	
102	1102 2845	Connector - 16P	
103	1102 2853	Connector - 40P	
104	1103 0507	Connector - 6P	
105	1103 0511	Connector - 11P	
106	1104 0412	Socket - 28P	
107	1204 1543	DIP Switch	
108	1401 0399	Transistor Array	
109	1401 0611	Diode - 1S1588	
110	1405 0168	Diode - IN4003	
111	1407 0536	IC - SN74LS51N	
112	1407 0539	IC - SN74LS04	

Index No.	Part No.	Description	Q'ty Per Assembly
113	1407 0542	IC - SN74LS00	
114	1407 0604	IC - TC40498P	
115	1407 0610	IC - SN74LS32N	
116	1407 0614	IC - SN74LS74N	
117	1407 0621	IC - SN74LS08N	
118	1407 0623	IC - SN74LS175N	
119	1407 0699	IC - SN74LS161AN	
120	1407 0700	IC - SN74LS174N	
121	1407 0744	IC - SN74LS158N	
122	1407 0760	IC - SN74LS14N	
123	1407 0762	IC - DM74LS42N	
124	1407 0774	IC - SN74LS393N	
125	1407 0777	IC - SN74LS153N	
126	1407 0814	IC - SN74LS139N	
127	1407 0816	IC - SN74LS157N	
128	1407 0817	Ttlic - SN74LS279N	
129	1407 0819	IC - SN74LS366AN	
130	1407 0887	IC - SN74LS244N	
131	1407 0891	IC - SN74LS365AN	
132	1407 1149	IC - SN74LS194AN	
133	1407 1673	IC - HM6264LP-15	
134	1408 0408	IC - PST518A	
135	1503 0141	Oscilator - CSA6.55MS11	
136	1600 1094	Resistor - 20Ω 15T ±5%	
137	1601 7352	Resistor Array - 4.7KΩ	
138	1601 7374	Resistor Array - 4.7KΩ	
139	1601 7391	Resistor Array - 680Ω	
140	1604 0983	Resistor - 120Ω 1/8W ±5%	
141	1604 1237	Capacitor - 3.3μF	
142	1606 0533	Capacitor - 0.01μF 50V	
143	1606 0684	Capacitor - 0.001μF 50V	
144	1606 0996	Capacitor - 470PF 25V	
145	1611 4102	Resistor - 1KΩ 1/4T ±5%	
146	1611 4222	Resistor - 2.2KΩ 1/4T ±5%	
147	1611 4472	Resistor - 4.7KΩ 1/4T ±5%	

CONTACT

SYMBOL NO.	INDEX NO.
TP600	100
TP601	100
TP602	100
TP603	100

CONNECTOR

SYMBOL NO.	INDEX NO.
CN601	105
CN602	106
CN603	102
CN604	101
CN605	104
CN606	103

TRANSISTOR

SYMBOL NO.	INDEX NO.
Q600	109
Q601	108
Q602	108
Q603	107
Q604	107
Q605	108
Q606	108
Q608	107
Q609	107

DIODE

SYMBOL NO.	INDEX NO.
D600	110
D601	110
D602	110
D603	110
D604	110
D605	110
D606	110
D607	110
D608	110

ZENER DIODE

SYMBOL NO.	INDEX NO.
ZD601	111

IC

SYMBOL NO.	INDEX NO.
IC600	115
IC601	115
IC602	123
IC603	112
IC604	112
IC605	115
IC606	120
IC607	114
IC608	124
IC609	124

SYMBOL NO.	INDEX NO.
IC610	122
IC611	124
IC612	125
IC613	118
IC614	113
IC615	122
IC616	121
IC617	117
IC618	119
IC619	116

SYMBOL NO.	INDEX NO.
IC620	119

VARIABLE RESISTOR

SYMBOL NO.	INDEX NO.
VR600	126

CAPACITOR

SYMBOL NO.	INDEX NO.
C600	127
C601	128
C602	131
C603	131
C604	131
C605	131
C606	131
C607	131
C608	131
C609	131

SYMBOL NO.	INDEX NO.
C610	131
C611	131
C612	131
C613	131
C614	131
C615	131
C616	131
C617	127
C618	-
C619	127

SYMBOL NO.	INDEX NO.
C620	127
C621	127
C622	130
C623	129
C624	133
C625	133
C626	133
C627	133
C628	133
C629	133

SYMBOL NO.	INDEX NO.
C630	133
C631	133
C632	134
C633	133
C634	133
C635	135
C636	133
C637	133
C638	133
C639	133

SYMBOL NO.	INDEX NO.
C640	133
C641	133
C642	133
C643	133
C644	136
C645	136
C646	132
C647	133
C648	133
C649	133

SYMBOL NO.	INDEX NO.
C650	136
C651	136
C652	133
C653	133
C654	133
C655	132
C656	133
C657	133
C658	133
C659	133

SYMBOL NO.	INDEX NO.
C660	133
C661	133

RESISTOR

SYMBOL NO.	INDEX NO.
R600	154
R601	154
R602	154
R603	143
R604	143
R605	161
R606	159
R607	143
R608	161
R609	149

SYMBOL NO.	INDEX NO.
R610	158
R611	152
R612	145
R613	165
R614	147
R615	153
R616	155
R617	159
R618	157
R619	156

SYMBOL NO.	INDEX NO.
R620	151
R621	151
R622	151
R623	143
R624	140
R625	164
R626	161
R627	161
R628	166
R629	166

SYMBOL NO.	INDEX NO.
R630	145
R631	166
R632	143
R633	148
R634	161
R635	154
R636	145
R637	151
R638	151
R639	151

SYMBOL NO.	INDEX NO.
R640	151
R641	154
R642	161
R643	160
R644	166
R645	140
R646	151
R647	145
R648	145
R649	137

SYMBOL NO.	INDEX NO.
R650	163
R651	140
R652	166
R653	166
R654	137
R655	166
R656	138
R657	166
R658	139
R659	139

SYMBOL NO.	INDEX NO.
R660	163
R661	137
R662	137
R663	143
R664	163
R665	150
R666	161
R667	148
R668	160
R669	151

SYMBOL NO.	INDEX NO.
R670	144
R671	163
R672	163
R673	143
R674	154
R675	158
R676	151
R677	146
R678	146
R679	151

SYMBOL NO.	INDEX NO.
R680	146
R681	143
R682	143
R683	143
R684	151
R685	151
R686	151
R687	151
R688	151
R689	151

SYMBOL NO.	INDEX NO.
R690	151
R691	151
R692	151
R693	151
R694	151
R695	151
R696	143
R697	151
R698	151
R699	151

SYMBOL NO.	INDEX NO.
R700	151
R701	151
R702	142
R703	141
R704	143
R705	162

35. A/D CONVERSION BOARD

September 15, '88

Index No.	Part No.	Description	Q'ty Per Assembly
*	C201 8012	A/D Conversion Board	1
100	1101 0328	Connector Pin Contact	
101	1102 0845	Terminal - 3P	
102	1102 0903	Terminal - 4P	
103	1102 0905	Terminal - 5P	
104	1102 0907	Connector - 6P	
105	1102 2854	Connector - 40P	
106	1102 3249	Connector - 16P	
107	1400 0366	Transistor - 2SC2812L5	
108	1400 0382	Transistor - 2SA1037KR	
109	1400 0393	Transistor - 2SK1700	
110	1401 0835	Diode - 1SS190	
111	1402 0711	Zener Diode - RD4.7MB3	
112	1407 1224	IC - DS0026CN-8	
113	1407 1605	Ttl - SN74LS157NS	
114	1407 1723	IC - TC4052BF	
115	1407 1724	IC - SN74LS14NS	
116	1407 1783	IC - SN74LS02NS	
117	1407 1849	IC - M52672P	
118	1407 1935	IC - TC4066BF	
119	1407 2052	IC - SN74LS74ANS	
120	1407 2081	IC - SN74LS08NS	
121	1407 2347	IC - SN74LS161NS	
122	1407 2348	IC - TC40501BF	
123	1408 0322	IC - DAC00800LCN	
124	1408 0562	IC - μPC4082G	
125	1408 0565	IC - μPC311G	
126	1601 8145	Variable Resistor - 5KΩ	
127	1604 1820	Capacitor - 33μF 16V ±20%	
128	1604 1821	Capacitor - 100μF 10V ±20%	
129	1604 1822	Capacitor - 10μF 16V ±20%	
130	1604 1855	Capacitor - 4.7μF 25V ±20%	
131	1605 0226	Capacitor - 1000PF 50V	
132	1605 0234	Capacitor - 220PF 50V	
133	1606 1139	Capacitor - 0.01μF ±20%	
134	1606 1140	Capacitor - 0.1μF +80% -20%	
135	1606 1450	Capacitor - 10μF 50V	
136	1606 1455	Capacitor - 470PF 25V	
137	1610 0017	Resistor - 10Ω 1/8T ±5%	
138	1610 0029	Resistor - 33Ω 1/8T ±5%	
139	1610 0033	Resistor - 68Ω 1/8T ±5%	
140	1610 0035	Resistor - 100Ω 1/8W ±5%	
141	1610 0047	Resistor - 330Ω 1/8W ±5%	
142	1610 0052	Resistor - 820Ω 1/8 ±5%	
143	1610 0053	Resistor - 1KΩ 1/8W ±5%	
144	1610 0055	Resistor - 1.2KΩ 1-8W ±5%	
145	1610 0060	Resistor - 2.0KΩ 1/8T ±5%	
146	1610 0061	Resistor - 2.2KΩ 1/8W ±5%	
147	1610 0062	Resistor - 2.4Ω ±5% 1/6W	
148	1610 0064	Resistor - 3KΩ 1/8W ±5%	
149	1610 0065	Resistor - 3.3KΩ 1/8W ±5%	
150	1610 0066	Resistor - 3.9KΩ 1/8W ±5%	
151	1610 0067	Resistor - 4.7KΩ 1/8W ±5%	
152	1610 0068	Resistor - 5.6KΩ 1/8W ±5%	
153	1610 0070	Resistor - 8.2KΩ 1/8T ±5%	
154	1610 0071	Resistor - 10KΩ 1/8W ±5%	
155	1610 0072	Resistor - 11KΩ 1/8T ±5%	
156	1610 0075	Resistor - 15KΩ 1/8W ±5%	
157	1610 0078	Resistor - 22KΩ 1/8W ±5%	
158	1610 0079	Resistor - 22KΩ 1/8W ±5%	
159	1610 0080	Resistor - 24KΩ 1/8T ±5%	
160	1610 0081	Resistor - 27KΩ 1/8W ±5%	
161	1610 0085	Resistor - 47KΩ 1/8W ±5%	
162	1610 0089	Resistor - 100KΩ 1/8W ±5%	
163	1610 0337	Resistor - 510Ω ±5% 1/8W	
164	1610 0512	Resistor - 6.2KΩ 1/8T ±5%	
165	1610 0513	Resistor - 5.1KΩ 1/8T ±5%	
166	1610 0537	Resistor - 51Ω 1/8T ±5%	

CONNECTOR

SYMBOL NO.	INDEX NO.
CN501	103
CN502	104
CN503	105
(FU1)	106
CN504	102
CN505	101

CAPACITOR

SYMBOL NO.	INDEX NO.
C101	159
C102	159
C103	162
C104	159
C105	145
C106	160
C107	163
C108	145
C110	163
C111	149

SYMBOL NO.	INDEX NO.
C112	153
C201	148
C202	158
C203	155
C204	147
C205	147
C206	149
C208	158
C209	155
C210	146

SYMBOL NO.	INDEX NO.
C211	141
C212	152
C214	155
C215	155
C216	143
C217	149
C218	149
C219	139
C220	155
C221	143

SYMBOL NO.	INDEX NO.
C222	149
C223	149
C224	139
C225	158
C226	157
C227	142
C228	142
C229	149
C230	140
C231	154

SYMBOL NO.	INDEX NO.
C232	143
C233	149
C234	161
C235	150
C236	139
C237	140
C238	154
C239	156
C240	149
C241	151

SYMBOL NO.	INDEX NO.
C242	150
C243	139
C244	161
C245	140
C246	144
C247	156
C248	144
C249	149
C250	161

RECTIFIER

SYMBOL NO.	INDEX NO.
DB	124

DIODE

SYMBOL NO.	INDEX NO.
D101	116
D102	116
D103	116
D104	116
D105	114
D106	114
D107	115
D201	117
D202	118
D204	115

SYMBOL NO.	INDEX NO.
D205	115
D206	119
D207	115
D208	120
D209	114
D210	113
D211	114
D212	114
D213	114
D214	114

SYMBOL NO.	INDEX NO.
D215	113
D217	114
D218	113
D219	113
D220	113
D221	115

FUSE

SYMBOL NO.	INDEX NO.
FU1	107

IC

SYMBOL NO.	INDEX NO.
IC1	127
IC2	126
IC3	127
IC4	125
IC5	128

COIL

SYMBOL NO.	INDEX NO.
L1	108
L2	3
L3	4
L4	164

P

SYMBOL NO.	INDEX NO.
P1	7
P2	7
P3	7
P4	7

TRANSISTOR

SYMBOL NO.	INDEX NO.
Q101	112
Q102	111
Q201	109
Q202	110
Q203	110
Q204	109
Q205	110
Q206	110

RESISTOR

SYMBOL NO.	INDEX NO.
R101	137
R102	136
R103	181
R104	129
R106	179
R107	129
R109	179
R110	131
R111	133
R201	180

SYMBOL NO.	INDEX NO.
R202	179
R203	179
R204	134
R206	179
R207	179
R208	135
R210	179
R211	179
R212	179
R213	179

SYMBOL NO.	INDEX NO.
R214	179
R215	130
R216	166
R217	175
R218	166
R219	167
R220	169
R221	177
R222	167
R223	168

SYMBOL NO.	INDEX NO.
R224	166
R225	167
R226	171
R227	170
R228	170
R229	176
R230	167
R231	165
R232	167
R234	166

SYMBOL NO.	INDEX NO.
R235	175
R236	166
R237	174
R238	169
R239	167
R240	167
R241	168
R242	167
R243	166
R244	178

SYMBOL NO.	INDEX NO.
R245	167
R246	171
R247	173
R248	167
R249	169
R250	167
R251	167
R252	167
R253	172
R254	167

SYMBOL NO.	INDEX NO.
R256	172
R257	172
R258	174
R259	165
R263	175
R264	166
R266	132
R267	166

SCR

SYMBOL NO.	INDEX NO.
SCR	122

ZNR

SYMBOL NO.	INDEX NO.
ZNR	121

TRC

SYMBOL NO.	INDEX NO.
TRC	123

T

SYMBOL NO.	INDEX NO.
T1	8
T2	1
T3	2
T4	5
T5	6

POTENTIOMETER

SYMBOL NO.	INDEX NO.
VR1	138
VR2	138

36. POWER SUPPLY UNIT

Index No.	Part No.	Description	Q'ty Per Assembly
*	C202 8353	Power Supply Unit	1
1	C200 8306	Transformer - T2	1
2	C200 8307	Transformer - T3	1
3	C200 8308	Coil - L2	1
4	C200 8309	Coil - L3	1
5	C200 8310	Transformer - 2	1
6	C200 8311	Transformer - 1	1
7	C200 8314	Vhd Harness	1
8	5205 5546	Transformer	1
101	1102 0901	Connector	
102	1102 3240	Connector - 4P	
103	1102 3241	Connector - 3P	
104	1102 3242	Connector - 2P	
105	1103 1023	Connector - 9P	
106	1104 0351	Fuse Holder	
107	1107 0516	Fuse - 8A	
108	1201 0061	SN Coil	
109	1400 0291	Transistor - 2SA1020	
110	1400 0311	Transistor - 2SC1740	
111	1401 0374	Transistor - 2SC3520LF113	
112	1401 0407	Transistor - 2SC3714	
113	1401 0821	Diode - 1SS133	
114	1401 0822	Diode - 1SS137	
115	1402 0517	Diode - 10DF2	
116	1402 0534	Diode - 10DF6	
117	1402 0571	Diode - S24LCA20	
118	1402 0699	Diode - FML22S	
119	1402 0741	Diode - KPG06D	
120	1402 0742	Diode - SB80-05H	
121	1404 0157	Diode - Snr - 221KD14	
122	1405 0122	Thyrister - 5P4M	
123	1405 0172	Thyrister - BCR10AM 8L - A - 8	
124	1405 0185	Transistor Array - Fbpc804	
125	1408 0104	IC - TA78012P	
126	1408 0308	IC - TL321CP	
127	1408 0344	IC - μPC494	
128	1408 0612	IC - AN78M12	
129	1600 0547	Resistor - 47KΩ ±5% 2W	
130	1600 0663	Resistor - 3.3Ω 3T	
131	1600 0677	Resistor - 4.7Ω 2T	
132	1600 1038	Resistor - 1Ω 5T ± 5%	
133	1600 1131	Resistor - 2.2Ω 5T	
134	1600 1160	Resistor - 100Ω 5T	
135	1600 1161	Resistor - 150Ω 15T	
136	1601 1293	Resistor - 47Ω 1T	
137	1601 7473	Resistor Fuse - 0.4A	
138	1601 8234	Variable Resistor - 1KΩ 0.2W	
139	1604 0996	Capacitor - 10MF ±20%	
140	1604 0997	Capacitor - 22μF 2V	
141	1604 1198	Capacitor - 470μF DC 35V	
142	1604 1200	Capacitor - 1000μF 10V	
143	1604 1244	Capacitor - 47μF 25V	
144	1604 1378	Capacitor - 1MF 50V	
145	1604 1487	Capacitor - 820μF 200V	
146	1604 1508	Capacitor - 1000μF 35V	

Index No.	Part No.	Description	Q'ty Per Assembly
147	1604 1859	Capacitor - 3300μF 16V	
148	1605 0106	Capacitor - 220PF 500V	
149	1606 0217	Capacitor - 0.1μF 25V	
150	1606 0385	Capacitor - 0.047μF 50V	
151	1606 0503	Capacitor - 0.0033MF 50V	
152	1606 0658	Capacitor - 0.1μF 50V	
153	1606 0897	Capacitor - 0.22μF 50V	
154	1606 0915	Capacitor - 100PF 50V	
155	1606 0930	Capacitor - 2200PF 500V	
156	1606 1005	Capacitor - 0.001μF 50V	
157	1606 1015	Capacitor - 4700PF 500V	
158	1606 1016	Capacitor - 1000PF 500V	
159	1606 1121	Capacitor - 0.1μF 25V	
160	1606 1167	Capacitor - 1000PF 2KV	
161	1606 1178	Capacitor - 0.01μF 50V	
162	1606 1476	Capacitor - 0.22μF 250V	
163	1606 1508	Capacitor - 10000PF 500V	
164	1607 0106	Coil - Sbc - 23	
165	1611 4101	Resistor - 100Ω 1/4T ±5%	
166	1611 4102	Resistor - 1KΩ 1/4T ±5%	
167	1611 4103	Resistor - 10KΩ 1/4T ±5%	
168	1611 4104	Resistor - 100KΩ 1/4T ±5%	
169	1611 4121	Resistor - 120Ω 1/4T ±5%	
170	1611 4152	Resistor - 1.5KΩ 1/4T ±5%	
171	1611 4153	Resistor - 15KΩ 1/4T ±5%	
172	1611 4223	Resistor - 22KΩ 1/4T ±5%	
173	1611 4332	Resistor - 3.3KΩ 1/4T ±5%	
174	1611 4432	Capacitor - 4.3Ω 1/4W	
175	1611 4471	Resistor - 470Ω 1/4T ±5%	
176	1611 4562	Resistor - 5.6KΩ 1/4T ±5%	
177	1611 4682	Resistor - 6.8KΩ 1/4T ±5%	
178	1611 4822	Resistor - 8.2KΩ 1/4T ±5%	
179	1611 6100	Resistor - 10Ω 1/2W	
180	1611 6101	Resistor - 100Ω 1/2T ±5%	
181	1611 6224	Resistor - 220KΩ 1/2W ±5%	

Index No.	Part No.	Description	Q'ty Per Assembly

CONNECTOR

SYMBOL NO.	INDEX NO.
CN301	102
CN302	105
CN303	106
CN304	104
CN305	103

NOISE KILLER

SYMBOL NO.	INDEX NO.
CR301	121
CR302	121
CR303	121
CR304	121
CR305	121
CR306	121
CR307	121
CR308	121

CAPACITOR

SYMBOL NO.	INDEX NO.
C301	123
C302	122

DIODE

SYMBOL NO.	INDEX NO.
D301	113
D302	113
D303	113
D304	113
D305	113
D306	114
D307	113

FUSE

SYMBOL NO.	INDEX NO.
FU301	107

COIL

SYMBOL NO.	INDEX NO.
L301	124
L302	124

PHOTO THYRISTOR

SYMBOL NO.	INDEX NO.
PC301	117

TRANSISTOR

SYMBOL NO.	INDEX NO.
Q301	111
Q302	112

RELAY

SYMBOL NO.	INDEX NO.
RA301	109
RA302	110
RA303	109
RA304	109
RA305	109
RA306	108
RA307	110

RESISTOR

SYMBOL NO.	INDEX NO.
R301	119
R302	120
R303	126
R304	125

ST

SYMBOL NO.	INDEX NO.
ST301	116

ZENER DIODE

SYMBOL NO.	INDEX NO.
ZD301	115

ZNR

SYMBOL NO.	INDEX NO.
ZNR301	118

37. AC DRIVE BOARD

Index No.	Part No.	Description	Q'ty Per Assembly
*	C201 8057	AC Drive Board	1

Index No.	Part No.	Description	Q'ty Per Assembly
102	1102 0919	Connector - 12P	
103	1102 0958	Connector - 2P	
104	1102 1048	Pin Housing - Mate-N-Lock	
105	1103 1388	Connector - 7P	
106	1103 1493	Connector	
107	1107 0389	Fuse - 25A	
108	1208 1041	Power Relay - DC24V	
109	1208 1245	Relay - DC24V	
110	1208 1246	Relay - AC100V	
111	1401 0289	Transistor - 2SC2749	
112	1401 0366	Transistor - 2SD799	
113	1401 0611	Diode - 1S1588	
114	1402 0110	Diode - V06C	
115	1402 0426	Zener Diode - RD12FB2	
116	1402 0646	Diode - S5VB20	
117	1403 0222	Photo Coupler - EE CF1	
118	1404 0143	Varistor - SNR221KD-10	
119	1600 1138	Resistor - 1Ω 5T ±10%	
120	1600 1139	Resistor - 6.8Ω 5T ±10%	
121	1602 0978	C & R - 0.1μF 120Ω	
122	1604 1196	Capacitor - 100μF 50V	
123	1604 1534	Capacitor - 100μF 200V	
124	1607 0001	Coil - SN-8S-500	
125	1611 4511	Resistor - 510Ω 1/4T ±5%	
126	1611 4911	Resistor - 910Ω 1/4T ±5%	

IC

SYMBOL NO.	INDEX NO.
IC1	105
IC2	106
IC3	108
IC4	107
IC5	106

CAPACITOR

SYMBOL NO.	INDEX NO.
C1	113
C2	113
C3	113
C4	113
C5	114
C6	112
C7	113
C8	112
C9	113
C10	113

SYMBOL NO.	INDEX NO.
C11	113
C12	114
C13	114
C14	114
C15	114
C16	114
C17	114
C18	114
C19	114
C20	114

SYMBOL NO.	INDEX NO.
C21	114

RESISTOR ARRAY

SYMBOL NO.	INDEX NO.
RA1	109
RA2	110
RA3	111

RESISTOR

SYMBOL NO.	INDEX NO.
R1	118
R2	120
R3	119
R4	120
R5	120
R6	115
R7	116
R8	122
R9	121
R10	118

DIODE ARRAY

SYMBOL NO.	INDEX NO.
R11	117
R12	117
R13	117
R14	117
R15	117

CONNECTOR

SYMBOL NO.	INDEX NO.
CN701	103
CN702	103
CN703	103
CN704	103
CN705	104
CN706	102
CN707	100
CN708	101

38. THERMAL HEAD DRIVE BOARD

Index No.	Part No.	Description	Q'ty Per Assembly
*	C201 8032	Thermal Head Drive Board	1

Index No.	Part No.	Description	Q'ty Per Assembly
100	1102 0917	Pin Housing - 11P	
101	1102 1055	Connector - 2P	
102	1102 3240	Connector - 4P	
103	1103 0832	Connector - 7P	
104	1103 1022	Connector - 5P	
105	1407 0577	IC - SN7406N	
106	1407 0760	IC - SN74LS14N	
107	1407 0821	IC - SN7407N	
108	1408 0356	IC - NJM2903D	
109	1601 7348	Resistor Array - 470Ω 1/8W ±5%	
110	1601 7352	Resistor Array - 4.7KΩ	
111	1601 7374	Resistor Array - 4.7KΩ	
112	1604 0983	Resistor - 120Ω 1/8W ±5%	
113	1606 0533	Capacitor - 0.01μF 50V	
114	1606 0684	Capacitor - 0.001μF 50V	
115	1611 4105	Resistor - 1KΩ 1/4T ±5%	
116	1611 4124	Resistor - 120KΩ 1/4T ±5%	
117	1611 4201	Resistor - 200Ω ±5% 1/4W	
118	1611 4301	Resistor - 300Ω 1/4T ±5%	
119	1611 4303	Resistor - 30KΩ 1/4T ±5%	
120	1611 4362	Resistor - 3.6KΩ 1/4W	
121	1611 4392	Resistor - 3.9KΩ 1/4T ±5%	
122	1611 4472	Resistor - 4.7KΩ 1/4T ±5%	

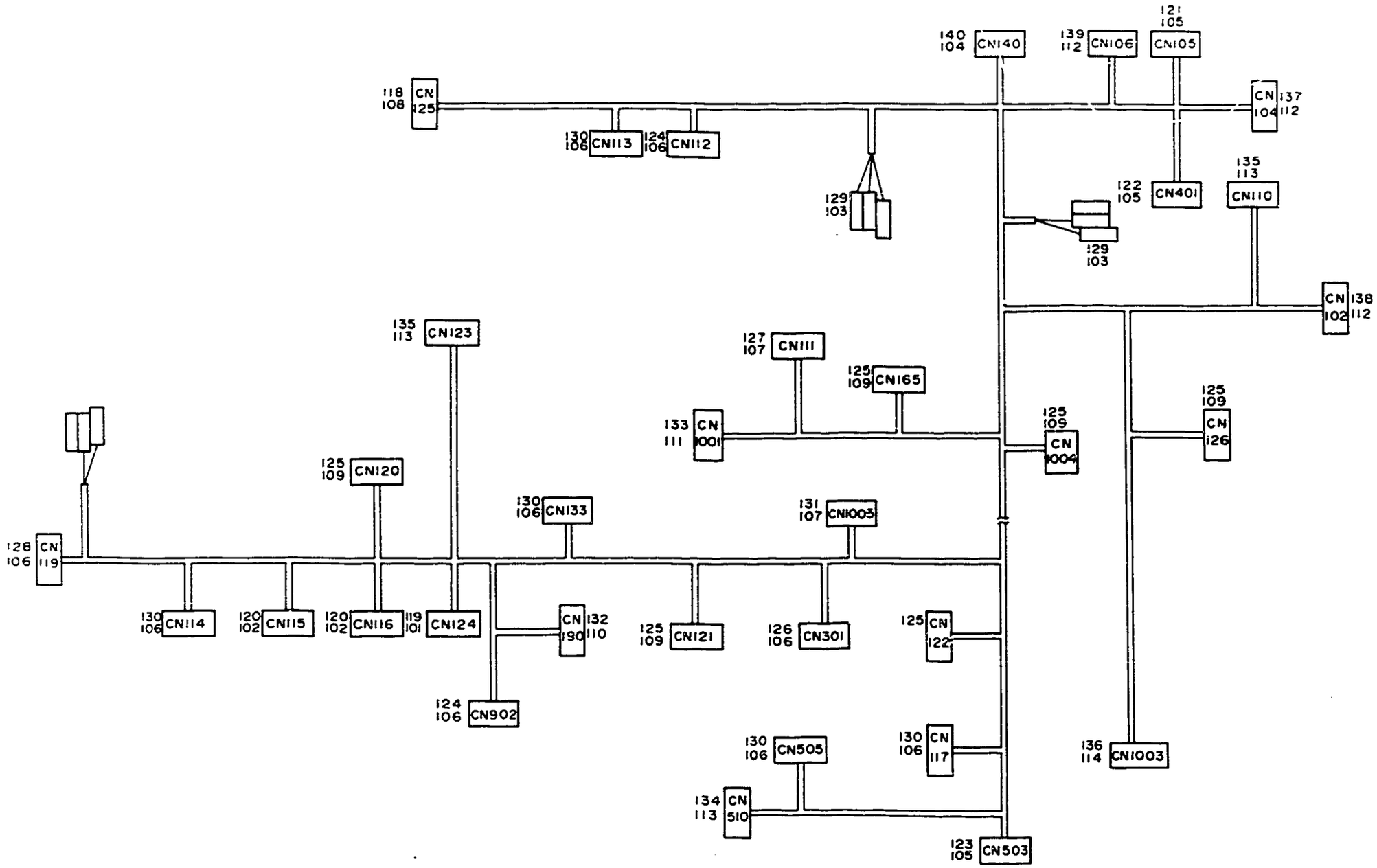
140 104 CN140
139 112 CN106
121 105 CN105
118 108 CN 125
CN 104 137 112
130 106 CN113
124 106 CN112
129 103
122 105 CN401
135 113 CN110
129 103
CN 102 138 112
135 113 CN123
127 107 CN111
125 109 CN165
133 CN 1001
125 109 CN 1004
125 109 CN 126
125 109 CN120
130 106 CN133
131 107 CN1005
128 106 CN 119
130 106 CN114
120 102 CN115
120 102 CN116
119 101 CN124
CN 190 132 110
125 109 CN121
126 106 CN301
125 CN 122
124 106 CN902
130 106 CN505
130 106 CN 117
136 114 CN1003
134 113 CN 510
123 105 CN503

39. MAIN HARNESS (SS830)

Index No.	Part No.	Description	Q'ty Per Assembly
*	C206 8092	Main Harness	1
101	1100 1148	Terminal	
102	1100 1149	Terminal	
103	1100 1169	Fastening Receptacle	
104	1100 1182	Socket - Mate-N-Lock	
105	1100 1190	Socket - Mate-N-Lock	
106	1100 1204	Socket - Mate-N-Lock	
107	1100 1205	Terminal	
108	1100 1206	Socket - Mate - N - Lock	
109	1100 1249	Receptacle Terminal	
110	1100 1327	Contact	
111	1100 1328	Contact	
112	1100 1348	Pin Contact	
113	1100 1374	Terminal	
114	1100 1433	Pin	
115	1100 1530	Pincontact	
116	1100 1531	Pincontact	
117	1100 1532	Pincontact	
118	1102 0185	Connector - 4P	
119	1102 1250	Connector - 2P	
120	1102 1258	Connector - 2P	
121	1102 1376	Connector - 6P	
122	1102 1377	Connector - 5265-7P	
123	1102 1379	Connector - 9P	
124	1102 1426	Connector - 3P	
125	1102 1620	Connector - 3P	
126	1102 1629	Connector - 10P	
127	1102 1633	Connector - 4P	
128	1102 1634	Connector - 5P	
129	1102 1691	Connector - 3P	
130	1102 1692	Connector - 2P	
131	1102 1749	Connector - 6P	
132	1102 1912	Connector - 4P	
133	1102 1966	Connector - 4P	
134	1102 2435	Connector - 6P	
135	1102 2436	Connector - 12P	
136	1102 3243	Connector - 3P	
137	1103 0658	Connector - 40P	
138	1103 0661	Connector	
139	1103 0662	Connector - 20P	
140	1103 0664	Connector - ϕF3C-10D-2.54C-3	

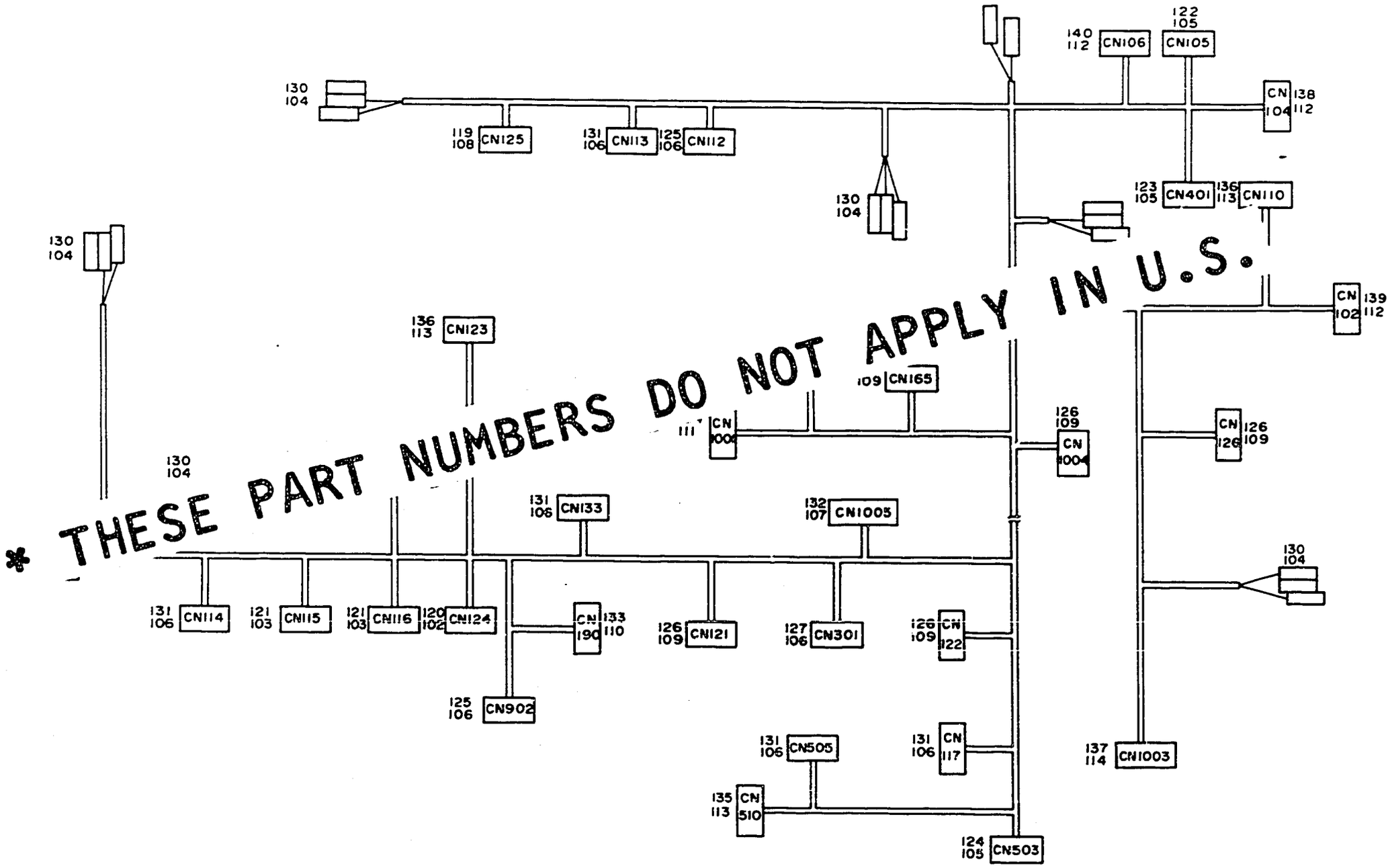
* THESE PART NUMBERS DO NOT APPLY IN U.S.
130 104
119 108 CN125
131 106 CN113
125 106 CN112
140 112 CN106
122 105 CN105
CN 104 138 112
123 105 CN401
136 113 CN110
CN 102 139 112
136 113 CN123
109 CN165
111 CN 1004
126 109 CN 1004
CN 126 126 109
131 106 CN133
132 107 CN1005
131 106 CN114
121 103 CN115
121 103 CN116
120 102 CN124
CN 190 133 110
126 109 CN121
127 106 CN301
126 109 CN 122
125 106 CN902
131 106 CN505
131 106 CN 117
135 113 CN 510
124 105 CN503
137 114 CN1003

40. MAIN HARNESS (SS810)

Index No.	Part No.	Description	Q'ty Per Assembly
*	C201 8292	Main Harness	1
101	1100 0290	Fastening Receptacle	
102	1100 1148	Terminal	
103	1100 1149	Terminal	
104	1100 1169	Fastening Receptacle	
105	1100 1190	Socket - Mate-N-Lock	
106	1100 1204	Socket - Mate-N-Lock	
107	1100 1205	Terminal	
108	1100 1206	Socket - Mate - N - Lock	
109	1100 1249	Receptacle Terminal	
110	1100 1327	Contact	
111	1100 1328	Contact	
112	1100 1348	Pin Contact	
113	1100 1374	Terminal	
114	1100 1433	Pin	
115	1100 1530	Pincontact	
116	1100 1531	Pin[illegible]	
117	1100 1537	[illegible]	
118	11[illegible]	[illegible]e Housing	
119	[illegible]	[illegible]onnector - 4P	
[illegible]	[illegible]250	Connector - 2P	
[illegible]	1102 1258	Connector - 2P	
122	1102 1376	Connector - 6P	
123	1102 1377	Connector - 5265-7P	
124	1102 1379	Connector - 9P	
125	1102 1426	Connector - 3P	
126	1102 1620	Connector - 3P	
127	1102 1629	Connector - 10P	
128	1102 1633	Connector - 4P	
129	1102 1634	Connector - 5P	
130	1102 1691	Connector - 3P	
131	1102 1692	Connector - 2P	
132	1102 1749	Connector - 6P	
133	1102 1912	Connector - 4P	
134	1102 1966	Connector - 4P	
135	1102 2435	Connector - 6P	
136	1102 2436	Connector - 12P	
137	1102 3243	Connector - 3P	
138	1103 0658	Connector - 40P	
139	1103 0661	Connector	
140	1103 0662	Connector - 20P	

* THESE PART NUMBERS DO NOT APPLY IN U.S.

41. AC HARNESS

September 15, '88

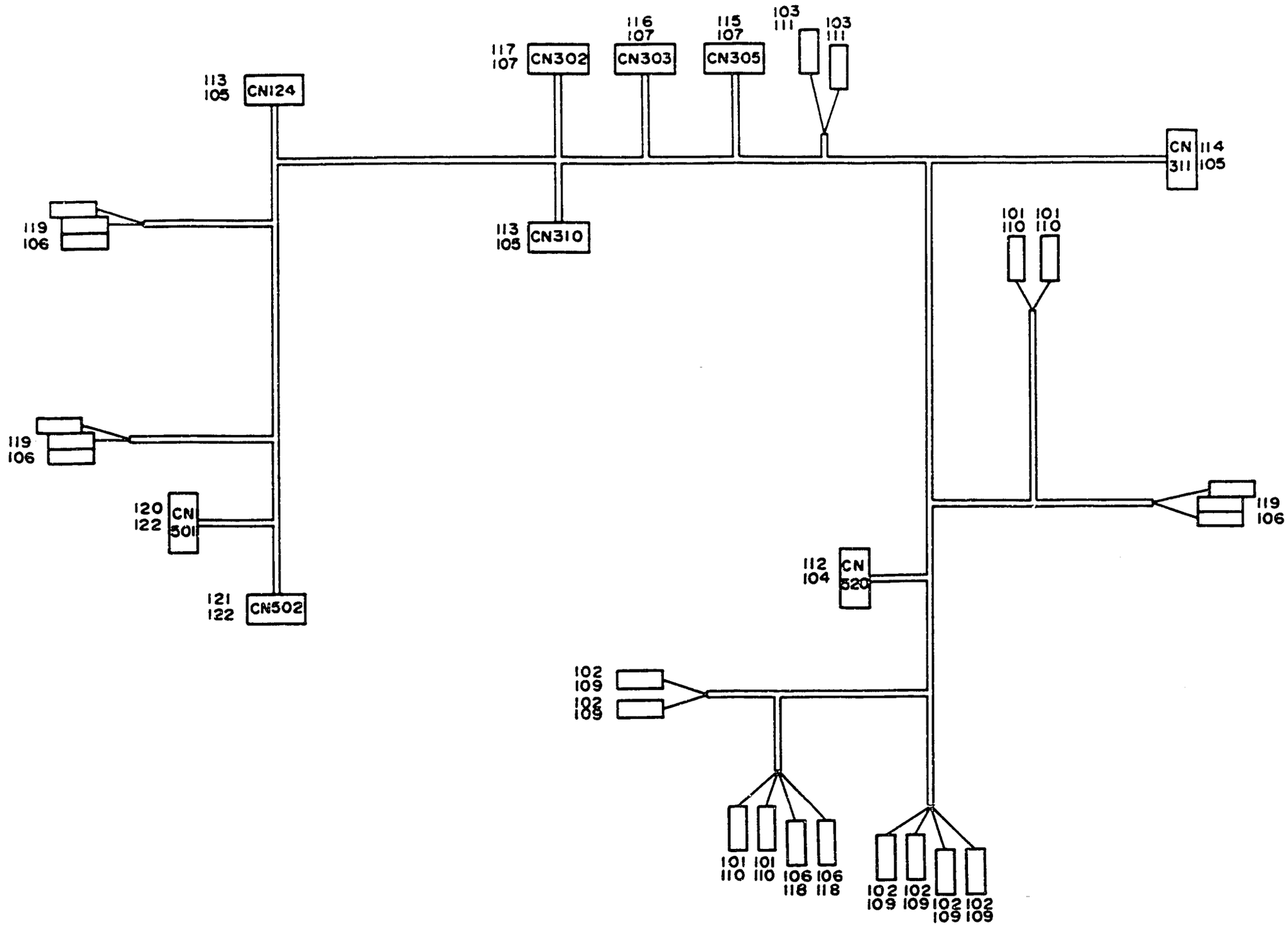

41. AC HARNESS

Index No.	Part No.	Description	Q'ty Per Assembly
*	C201 8287	AC Harness	1

Index No.	Part No.	Description	Q'ty Per Assembly
101	1100 0280	Fastening Receptacle	
102	1100 0858	Receptacle - 6.35×6.35	
103	1100 0885	Fastening Receptacle - 220/240V	
104	1100 0916	Pin - Mate-N-Lock	
105	1100 1149	Terminal	
106	1100 1168	Fastening Receptacle	
107	1100 1190	Socket - Mate-N-Lock	
108	1100 1531	Pincontact	
109	1102 0086	Seeve - 250	
110	1102 0094	Receptacle Housing	
111	1102 0321	Insulation Sleeve	
112	1102 0782	Connector - 4P	
113	1102 1258	Connector - 2P	
114	1102 1259	Connector - 3P	
115	1102 1350	Connector - 5239-2P	
116	1102 1351	Connector - 3P	
117	1102 1377	Connector - 5265-7P	
118	1102 1408	Receptacle Housing	
119	1102 1691	Connector - 3P	
120	1102 3235	Connector - 3P	
121	1102 3236	Connector - 2P	
122	1104 0462	Socket	

1

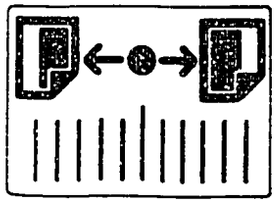

2

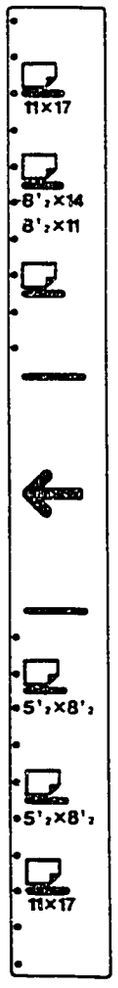
11×17
8½×14
8½×11
5½×8½
5½×8½
11×17

3

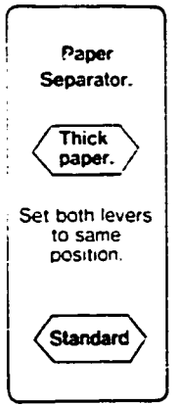
Paper Separator.
Thick paper.
Set both levers to same position.
Standard

4

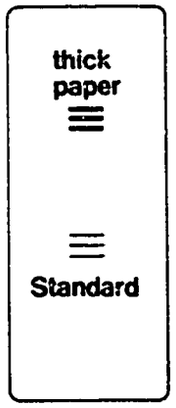
thick paper
Standard

5

ON
OFF

6

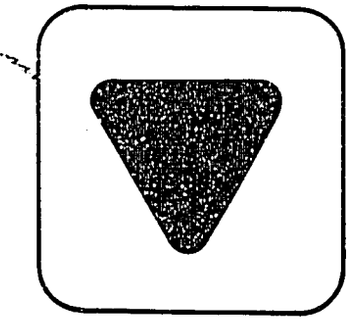

8

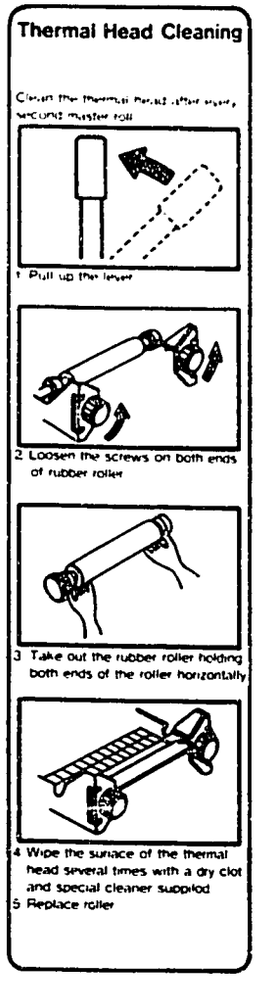
Thermal Head Cleaning
1 Pull up the lever
2 Loosen the screws on both ends of rubber roller
3 Take out the rubber roller holding both ends of the roller horizontally
4 Wipe the surface of the thermal head several times with a dry clot and special cleaner supplied
5 Replace roller

7

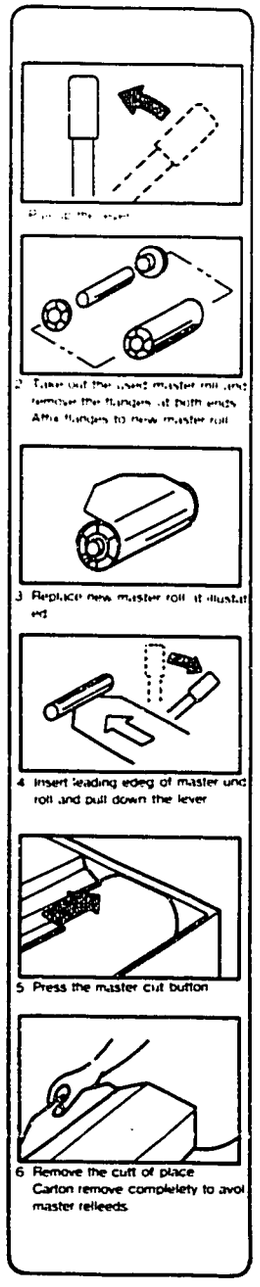
3 Replace new master roll it illustrated
4 Insert leading edeg of master und roll and pull down the lever
5 Press the master cut button
6 Remove the cuff of place Carton remove completely to avoid master relleeds

9

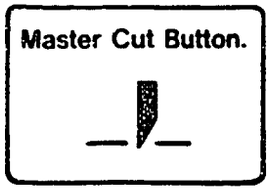

12

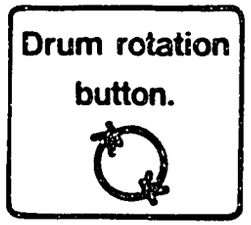

10

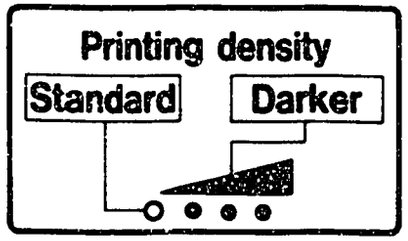

13

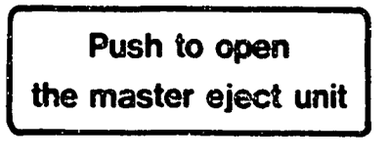

11

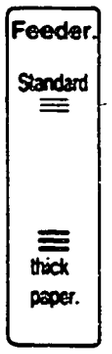

14

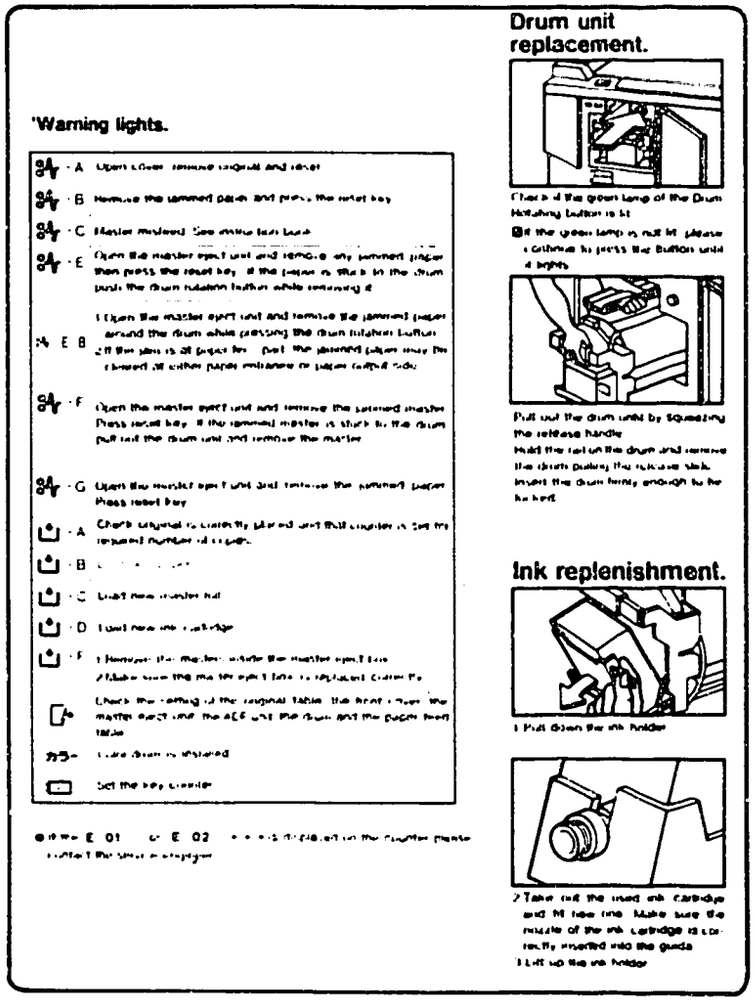

15

How to Open and Clase the original table.

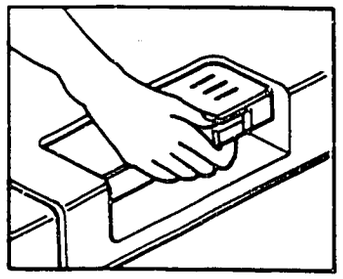

1 Lift release lever.

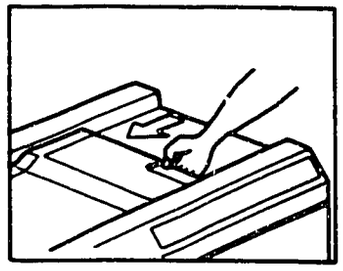

2 Slide the original table to the ▼ mark.

3 To rdturn the original table. slide conpletely to the right.

16

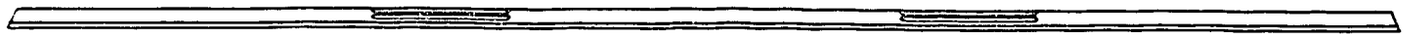

17

18

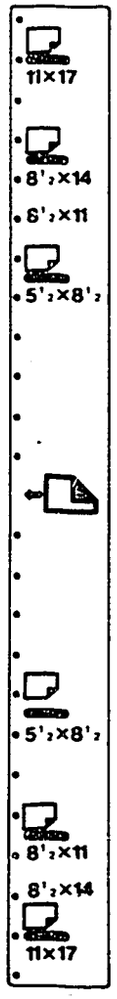

19

20

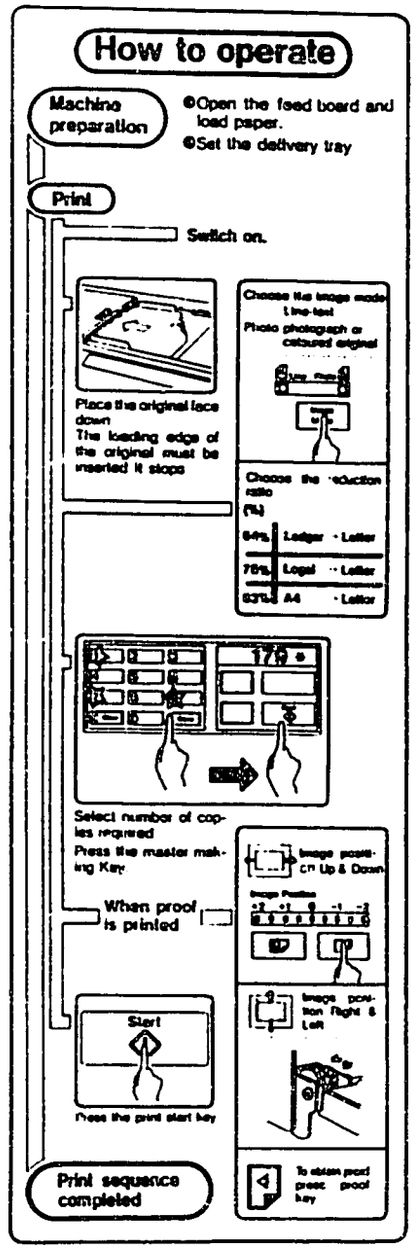
How to operate
Machine preparation
●Open the feed board and load paper.
●Set the delivery tray
Print
Switch on.
Place the original face down
The leading edge of the original must be inserted it stops
Choose the image mode
Line-text
Photo photograph or coloured original
Choose the reduction ratio
(%)
Ledger · Letter
Legal · Letter
A4 · Letter
Select number of copies required
Press the master making Key
When proof is printed
Image position Up & Down
Image Position
Start
Press the print start key
Image position Right & Left
Print sequence completed
To obtain proof press proof key

21

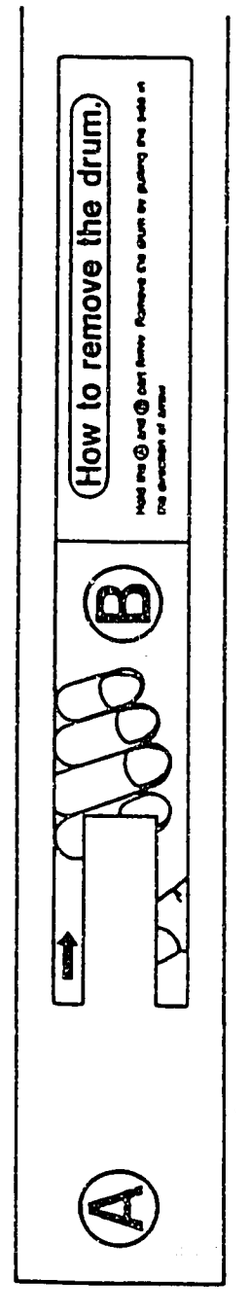
How to remove the drum.
B
A

22

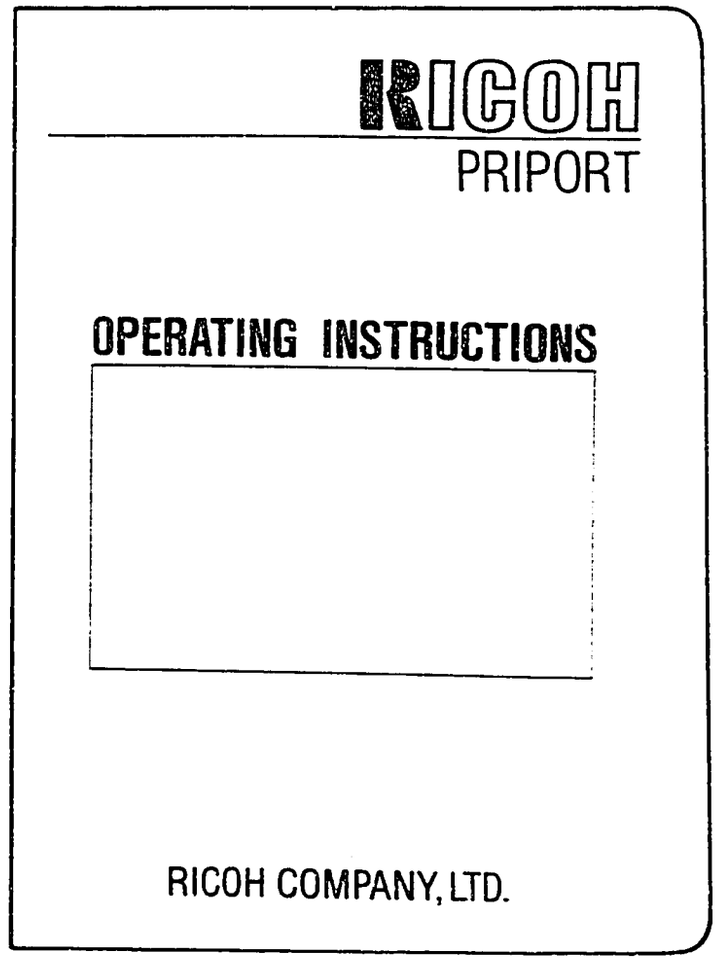
RICOH
PRIPORT
OPERATING INSTRUCTIONS
RICOH COMPANY, LTD.

23

PRIPORT SS OPERATING GUIDE

Please refer to the Operating Instructions for detailed information.

1. Set Up the Machine

1) Stack paper on the paper table

NOTE:
- Bring the paper feed side plates lightly in contact with the paper

2) Set the paper delivery table

NOTE:
- Position the side plates at the proper paper size

3) When using paper smaller than A4 (LT) size, move the small paper end plate

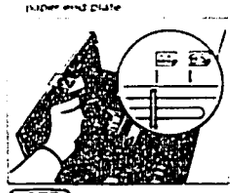

NOTE:
- Position the end plate for the printing paper size, using the scale on the table.

2. Printing

1) Insert original face down

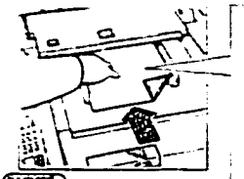

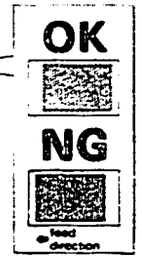

NOTE:
① Insert the original along the original guides until it stops.
② Insert the original with the widest blank margin first.

2) Enter the desired number of prints, then press the Master Making key.

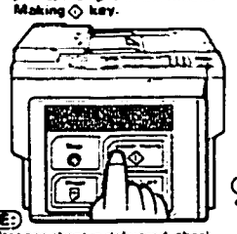

NOTE:
- After one sheet is delivered, check the image position.

3) Adjust the image position using the Image Position key.

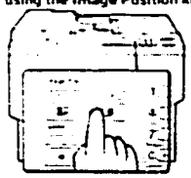

NOTE:
- A blank area (non image area) of more than 10 mm should exist on the original leading edge

4) Press the Print Start Key.

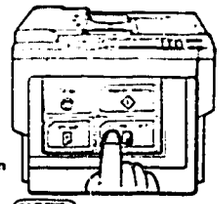

NOTE:
- Check the paper feed and delivery conditions.

3. Troubleshooting!

1) When cover open indication blinks.

1	Original Table
2	Front Cover
3	Master Eject Unit
4	Drum Unit
5	Paper Table
6	ADF

1 Slide the original table to the right

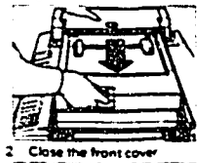

2 Close the front cover

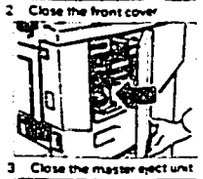

3 Close the master eject unit

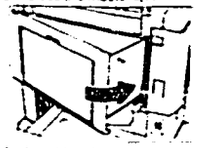

4 Insert the drum unit

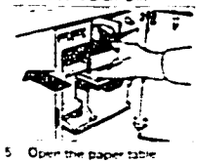

5 Open the paper table

6 Close the ADF

2) When the indicator blinks.

+ A	Set the original or print number
+ B	Stack paper
+ C	Replace master
+ D	Replace ink cartridge
+ F	Set the original or print number / Set the master eject box

+ C Replace master

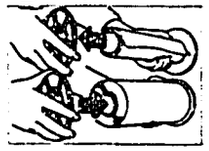

+ D Replace ink cartridge

- After the new ink cartridge is set, press the Reset [ ] key. Then, make sure that + D turn off.

+ F

① Reinstall the master eject box after disposing of the masters ejected into the box
② Check the installation of the master eject box

3) When jam indication blinks

+ A	Original Misfeed	+ E+B	Paper Wrapping / Paper Misfeed (Paper feed section)
+ B	Paper Misfeed (Paper feed section)	+ G	Paper Misfeed (Paper delivery section)
+ C	Master Misfeed (Master feed section)	+ F	Master Miseject
+ E	Paper Wrapping		

Note 1: Press the Reset [ ] key after removing the jammed paper or master

Note 2: How to re-start print
Press the Master Making key when + A, + C or + F blink.
Press the Print Start key when + B, + E, + E + B or + G blink.

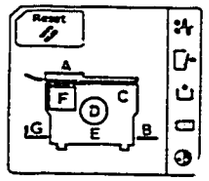

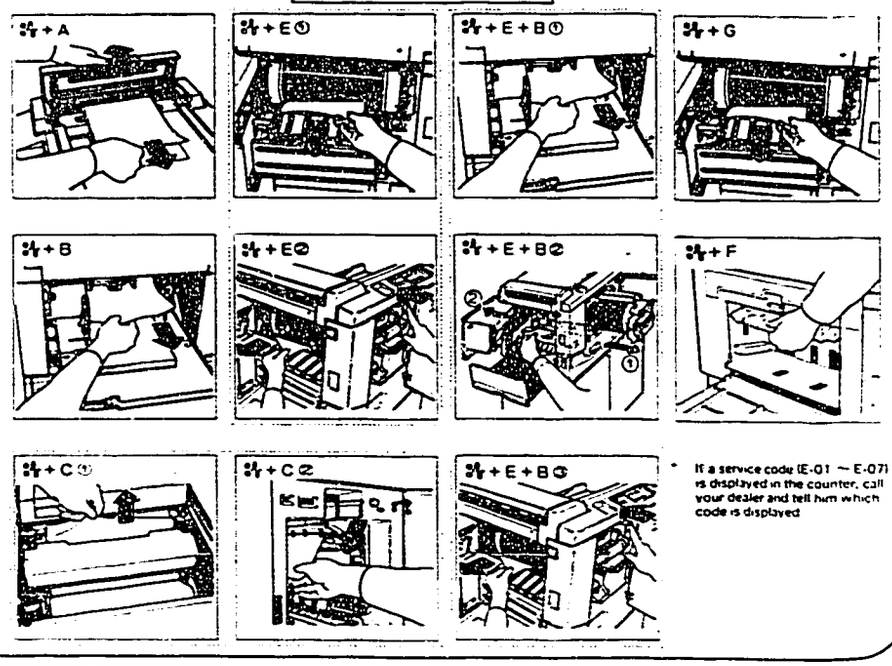

If a service code (E-01 ~ E-07) is displayed in the counter, call your dealer and tell him which code is displayed.

4. Drum unit replacement

1 Press the Drum Rotating button until the beeper sounds

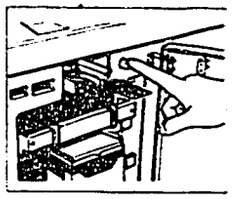

2 Pull the drum unit handle while pressing the release bar inside the green handle

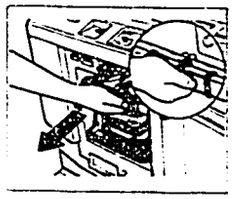

3 Pull the drum lock lever to the front side, to release the drum lock

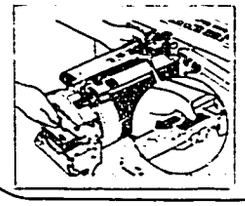

4 Remove the drum unit from the machine while holding the upper drum stay

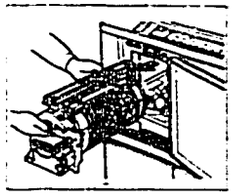

5 Set the drum on the drum rail inside the machine after removing the jammed paper

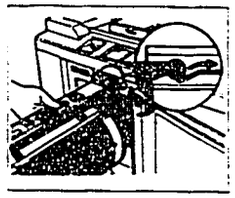

6 Insert the drum unit completely into the machine

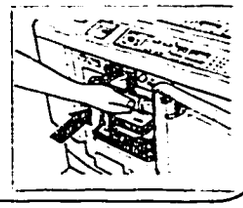

Mount this sheet in near the machine where it can be easily referenced.

RICOH

42. DECAL AND DOCUMENT

September 15, '88

Index No.	Part No.	Description	Q'ty Per Assembly
1	C203 2453	Decal - Paper Feed Table	1
2	C203 2716	Decal - Paper Size - LT	1
2	C204 2718	Decal - Paper Size - A4	1
3	C203 2728	Decal - Paper Separator	2
4	C203 2729	Paper Exit Decal	1
5	C201 2461	Decal - Main Switch	1
6	C201 2462	Decal - Original Table	1
7	C203 2709	Decal - Master Setting	1
8	C201 2542	Decal - Thermal Head Cleaning	1
9	C203 2759	Master Cutter Decal	1
10	C201 2545	Density Decal	1
11	C203 2737	Paper Feed Decal	1
12	C203 2742	Decal - Drum Operation	1
13	C203 2731	Decal - Master Eject Open	1
14	C201 2536	Decal - Replacing Drum Unit	1
15	C203 2736	Decal - Original Table	1
16	C202 2408	Decal - ADF	1
17	C202 2430	Decal - ADF ON/OFF	1
18	C203 2733	Decal - Scale (LT)	1
18	C201 2533	Decal - Original Level (A4)	1
19	C203 2735	Decal - Open Carefully	1
20	C206 2732	Decal - How To Operate (SS830)	1
20	C201 2732	Decal - How To Operate - LT	1
20	C201 2718	Decal - How To Operate - A4	1
21	C201 2543	Decal - Drum Caution	1
22	C206 8600	Operating Instructions - English(SS830)	1
22	C201 8600	Operating Instructions - English(SS810)	1
23	C206 8630	Operating Guide - English (SS830)	1
23	C201 8630	Operating Guide - English (SS810)	1

Index No.	Part No.	Description	Q'ty Per Assembly

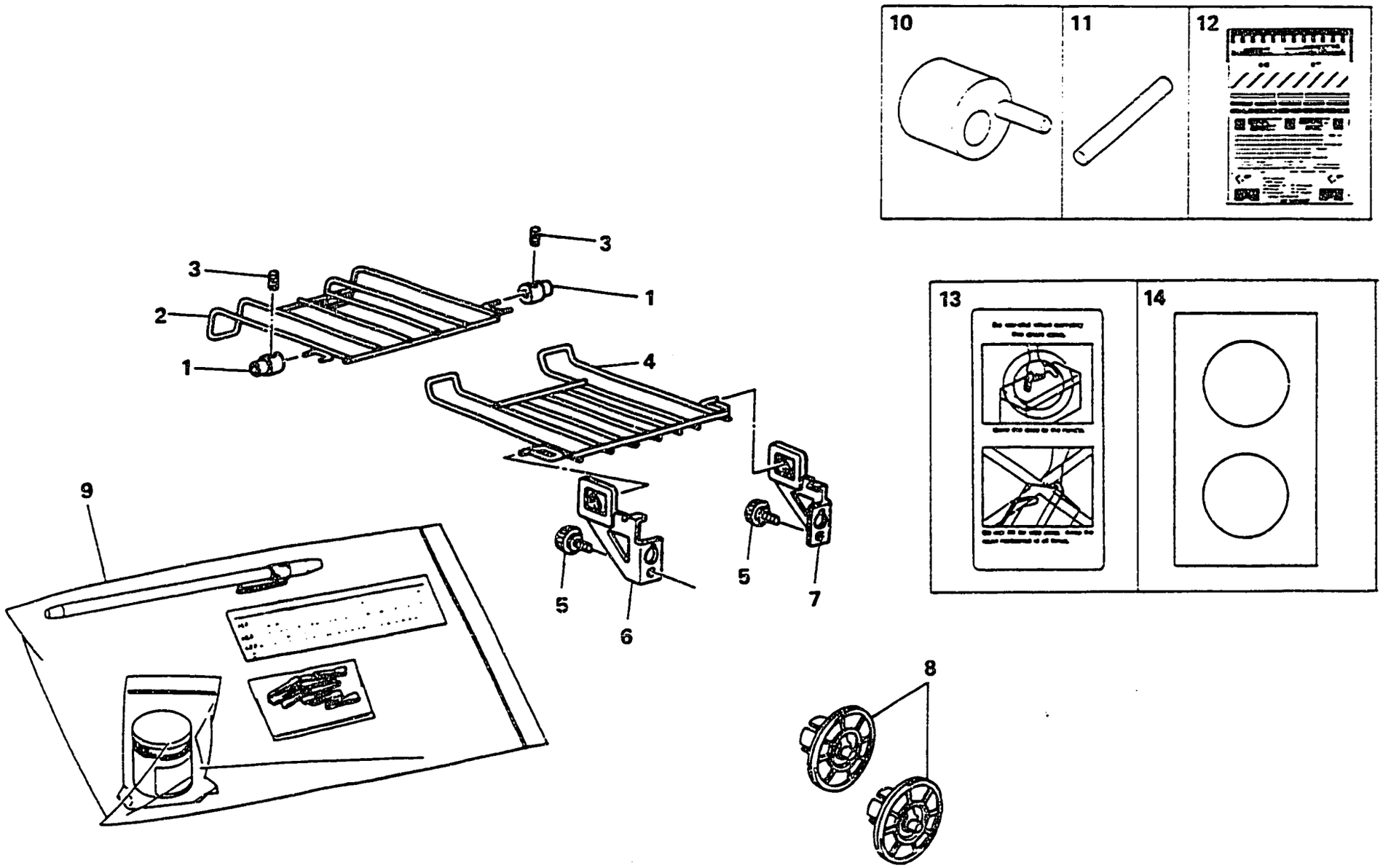
10
11
12
13
14
1
2
3
4
5
6
7
8
9

43. ACCESSORIES AND SPECIAL TOOLS

September 15, '88

Index No.	Part No.	Description	Q'ty Per Assembly
1	C200 3153	Original Tray Collar	1
2	C200 3158	Original Tray	1
3	0573 0040E	Hexagon Headless Set Screw - M3x4	1
4	C203 3075	Original Exit Tray	1
5	0803 0017	Knob Screw - M4x65	1
6	C201 3020	Left Bracket - Original Tray	1
7	C201 3023	Right Bracket - Original Tray	1
8	C201 4005	Master Roll Flange	2
9	C201 8730	Thermal Head Cleaner	1
10	C200 9002	Image Shifting Guage	1
11	C200 9001	Drum Guage	1
12	9999 2131	Test Chart	1
13	C505 2031	Decal - Drum Case	1
14	C505 2150	Drum Decal - Black	1
14	C505 2151	Drum Decal - Red	1
14	C505 2152	Drum Decal - Blue	1
14	C505 2153	Drum Decal - Green	1
14	C505 2154	Drum Decal - Brown	1

Index No.	Part No.	Description	Q'ty Per Assembly