Model PT 3 (C275)

PARTS CATALOG

First edition, November 2009

Ricoh Company, LTD.

Model PT 3 (C275)

PARTS CATALOG

This catalog gives the numbers and names of parts on this machine.

Model PT 3	(C275)
DF Type20	(C642)
Color Drum Type20	(C647)
TAPE Dispenser Type20	(C651)
Platen Cover Type 1018	(B406)

Model PT 3 (C275)

Model PT 3 (C275)

PARTS CATALOG

This catalog gives the numbers and names of parts on this machine.

Location Of Unit 2
1.Exterior (C275) 8
2.Operation Panel (C275) 10
3.Scanner Unit 1 (C275) 12
4.Scanner Unit 2 (C275) 14
5.Scanner Unit 3 (C275) 16
6.Paper Table Section (C275) 18
7.Paper Registration 1 (C275) 20
8.Paper Registration 2 (C275) 22
9.Paper Feed Section (C275) 24
10.Protter Unit 1 (C275) 26
11.Protter Unit 2 (C275) 28
12.Protter Unit 3 (C275) 30
13.Press Roller Section (C275) 32
14.Drum Unit 1 (C275) 34
15.Drum Unit 2 (C275) 36
16.Drum Unit 3 (C275) 38
17.Vacuume Fan Unit (C275) 40
18.Delibary Table (C275) 42
19.Master Eject Unit 1 (C275) 44
20.Master Eject Unit 2 (C275) 46
21.Electrical Section 1 (C275) 48
22.Electrical Section 2 (C275) 50
23.Drive Section 1 (C275) 52
24.Drive Section 2 (C275) 54
25.Frame Section 1 (C275) 56
26.Frame Section 2 (C275) 58
27.MPU Board (C275) 60
28.Decals And Documents (C275) 72
29.Special Tools (C275) 76
Parts Index 80

November 2, 2009

LOCATIONS OF UNITS

1. Exterior (C275)

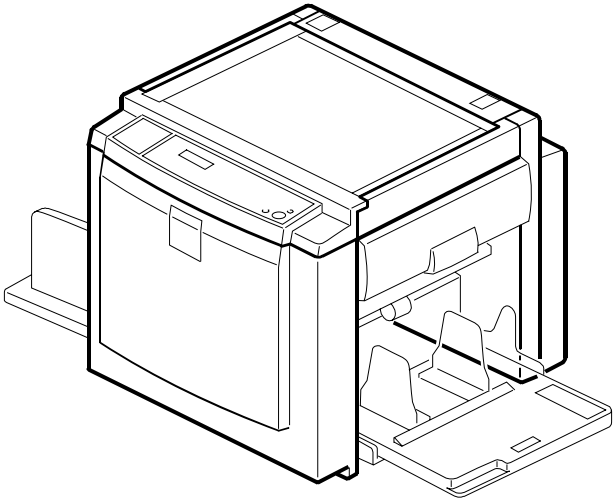

See Page 9

2. Operation Panel (C275)

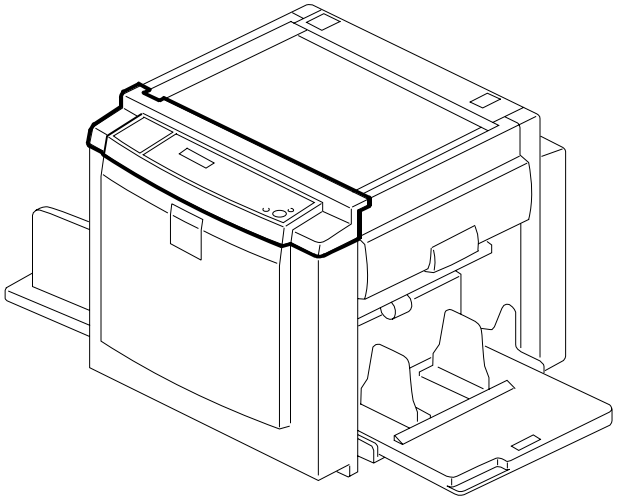

See Page 11

3. Scanner Unit 1 (C275)

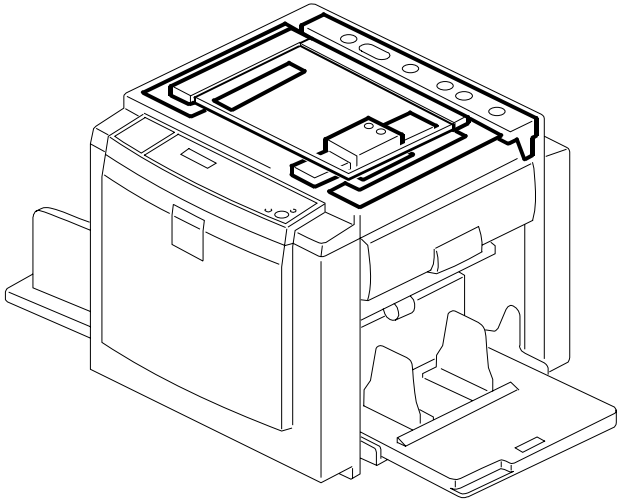

See Page 13

4. Scanner Unit 2 (C275)

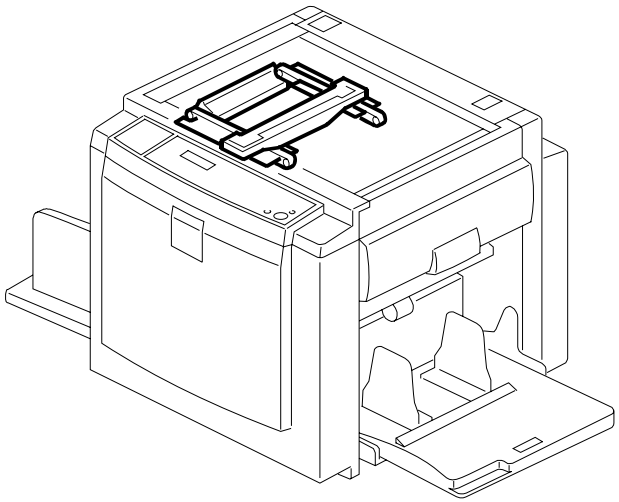

See Page 15

5. Scanner Unit 3 (C275)

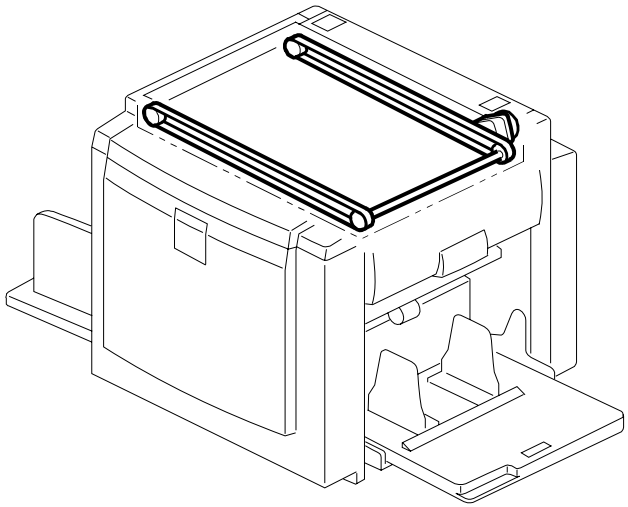

See Page 17

6. Paper Table Section (C275)

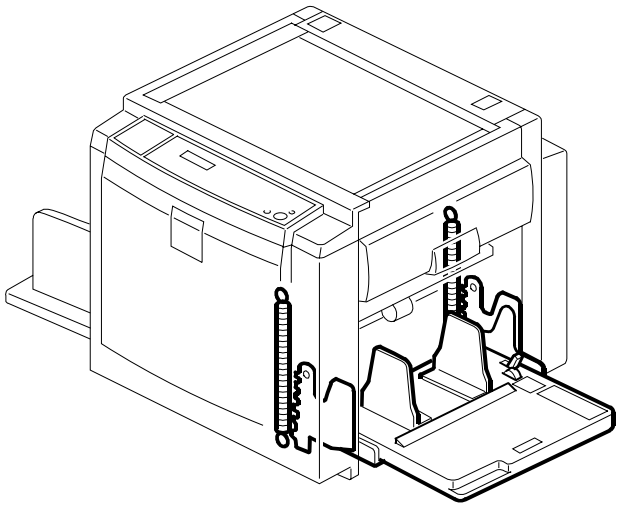

See Page 19

LOCATIONS OF UNITS

7. Paper Registration 1 (C275)

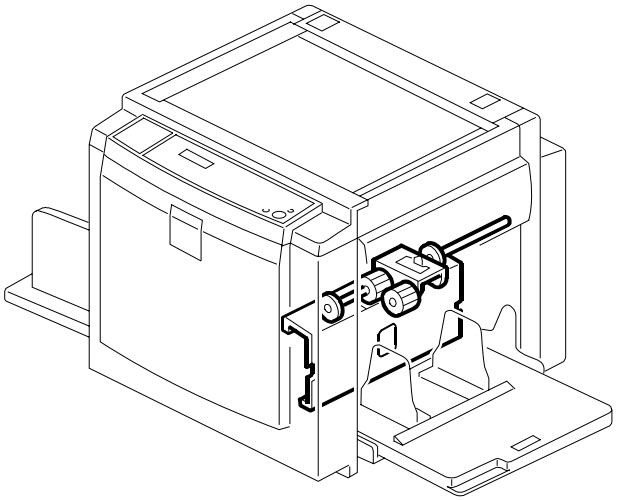

See Page 21

8. Paper Registration 2 (C275)

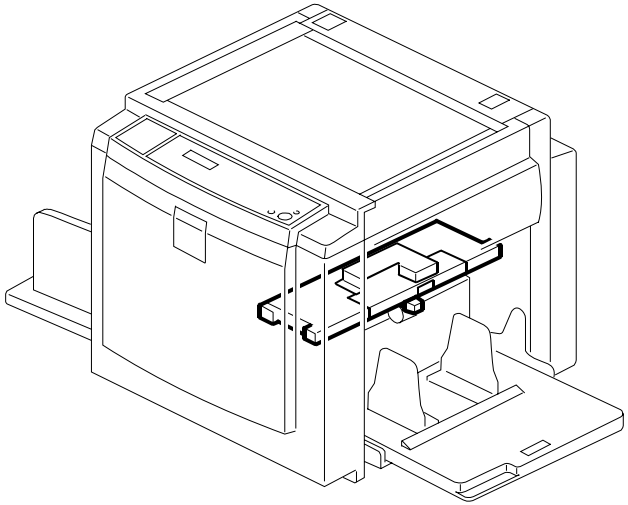

See Page 23

9. Paper Feed Section (C275)

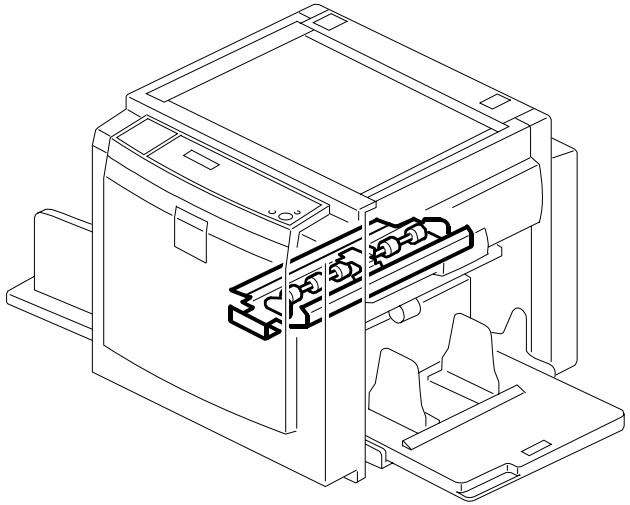

See Page 25

10. Protter Unit 1 (C275)

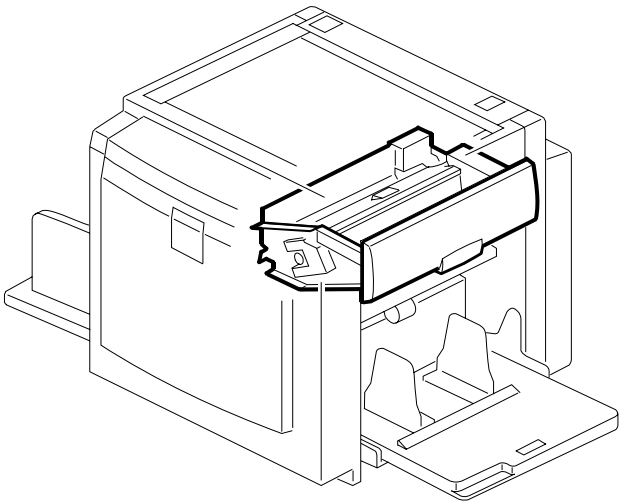

See Page 27

11. Protter Unit 2 (C275)

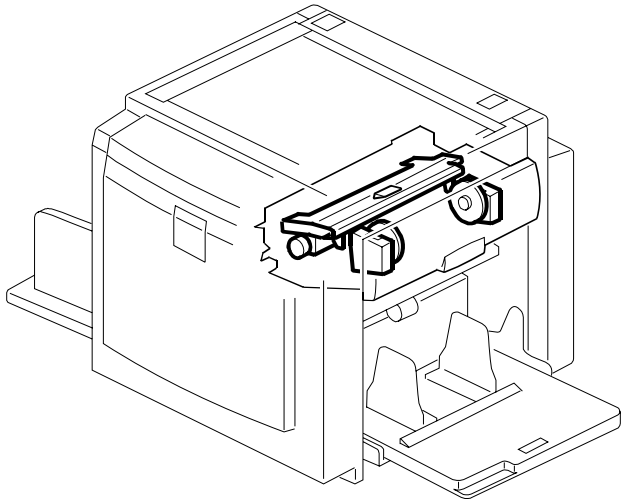

See Page 29

12. Protter Unit 3 (C275)

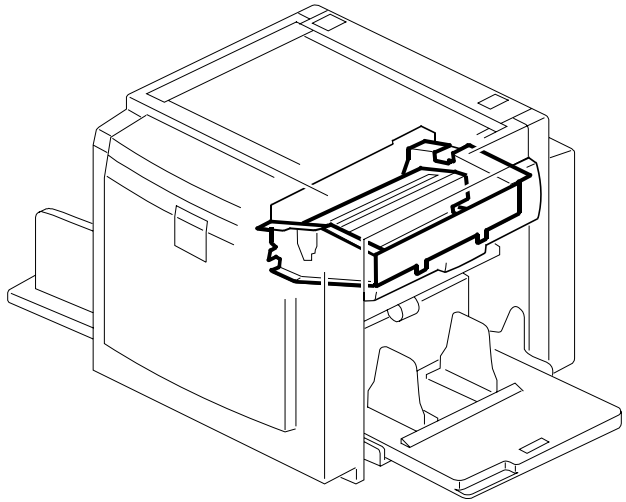

See Page 31

LOCATIONS OF UNITS

13. Press Roller Section (C275)

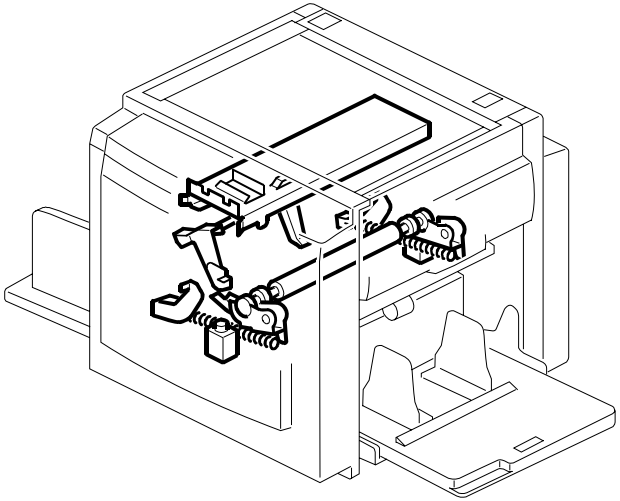

See Page 33

14. Drum Unit 1 (C275)

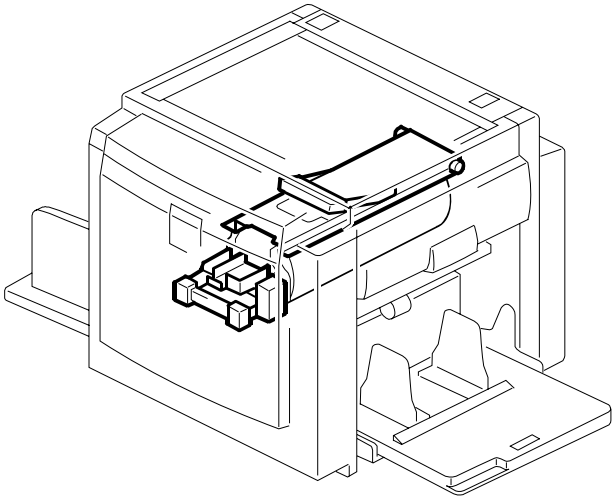

See Page 35

15. Drum Unit 2 (C275)

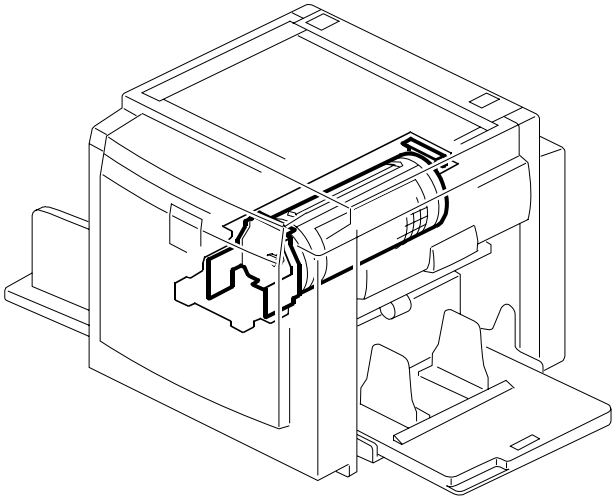

See Page 37

16. Drum Unit 3 (C275)

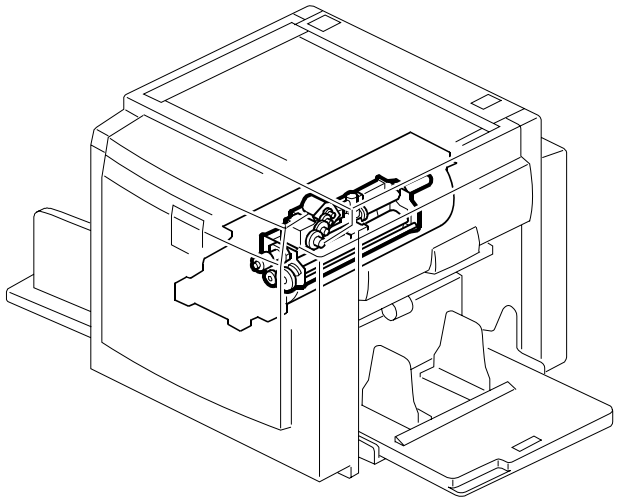

See Page 39

17. Vacuume Fan Unit (C275)

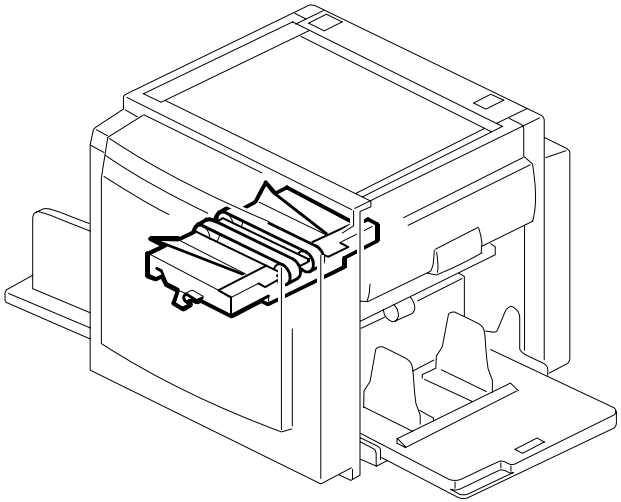

See Page 41

18. Delibary Table (C275)

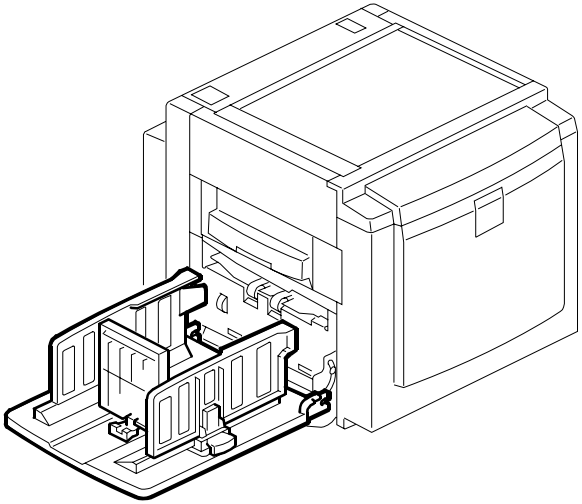

See Page 43

LOCATIONS OF UNITS

19. Master Eject Unit 1 (C275)

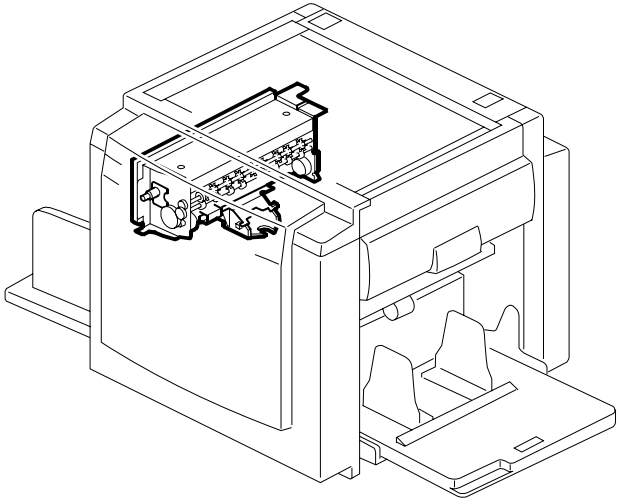

See Page 45

20. Master Eject Unit 2 (C275)

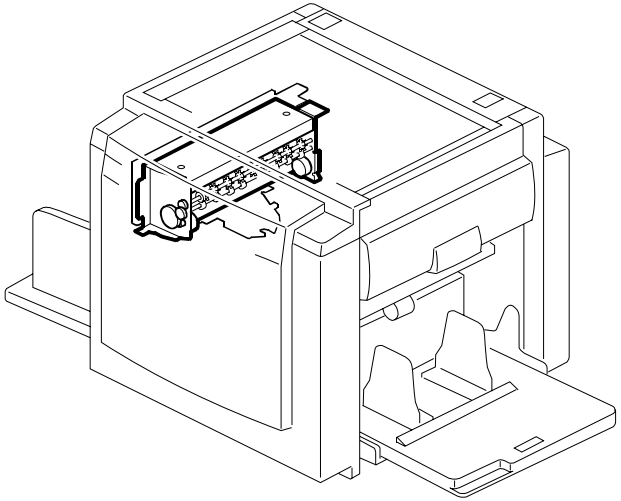

See Page 47

21. Electrical Section 1 (C275)

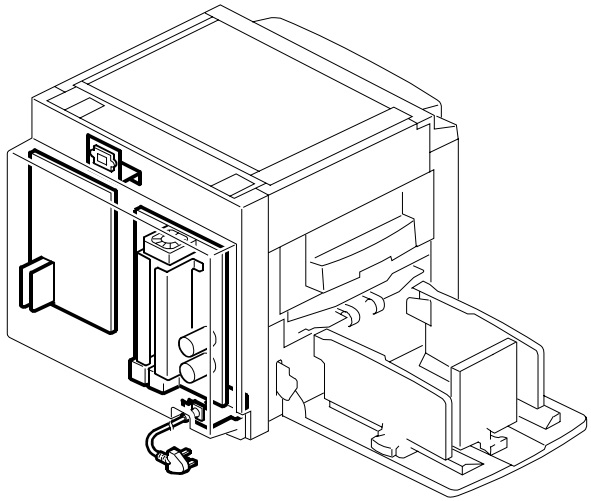

See Page 49

22. Electrical Section 2 (C275)

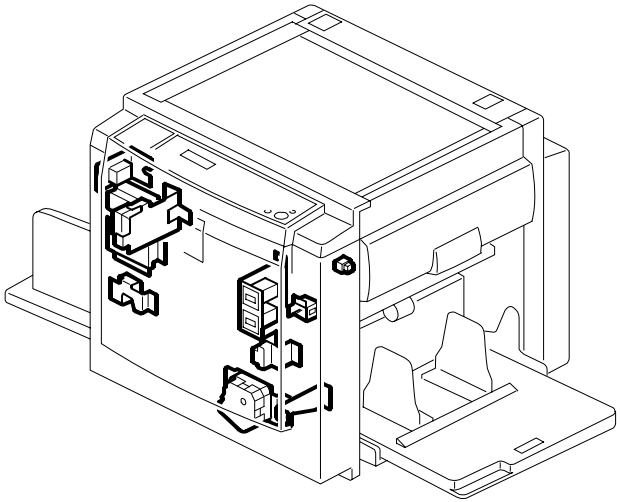

See Page 51

23. Drive Section 1 (C275)

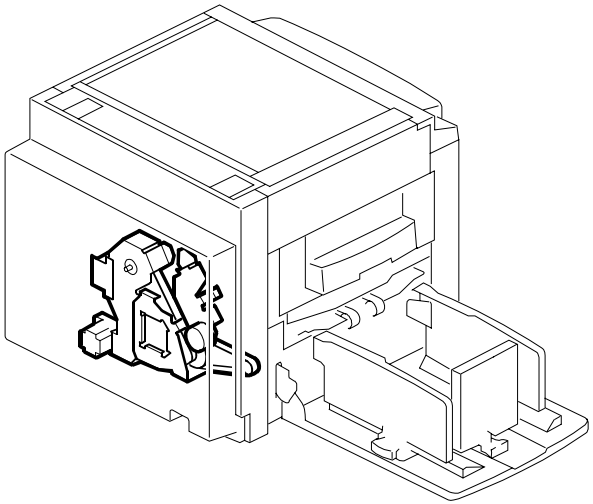

See Page 53

24. Drive Section 2 (C275)

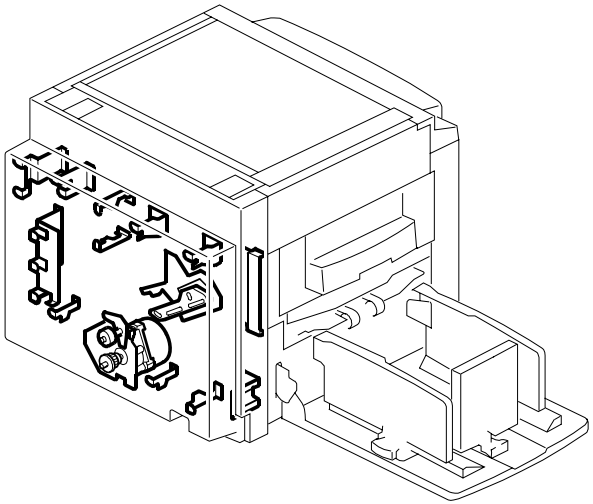

See Page 55

LOCATIONS OF UNITS

25. Frame Section 1 (C275)

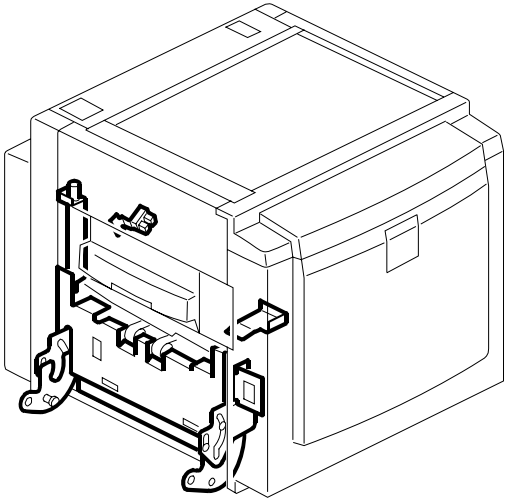

See Page 57

26. Frame Section 2 (C275)

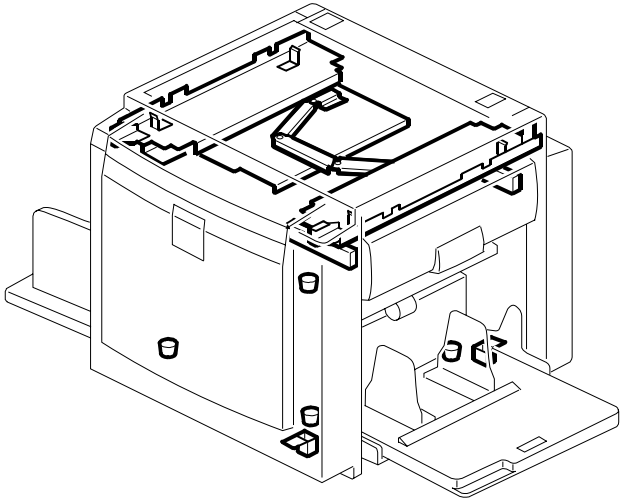

See Page 59

1.Exterior (C275)

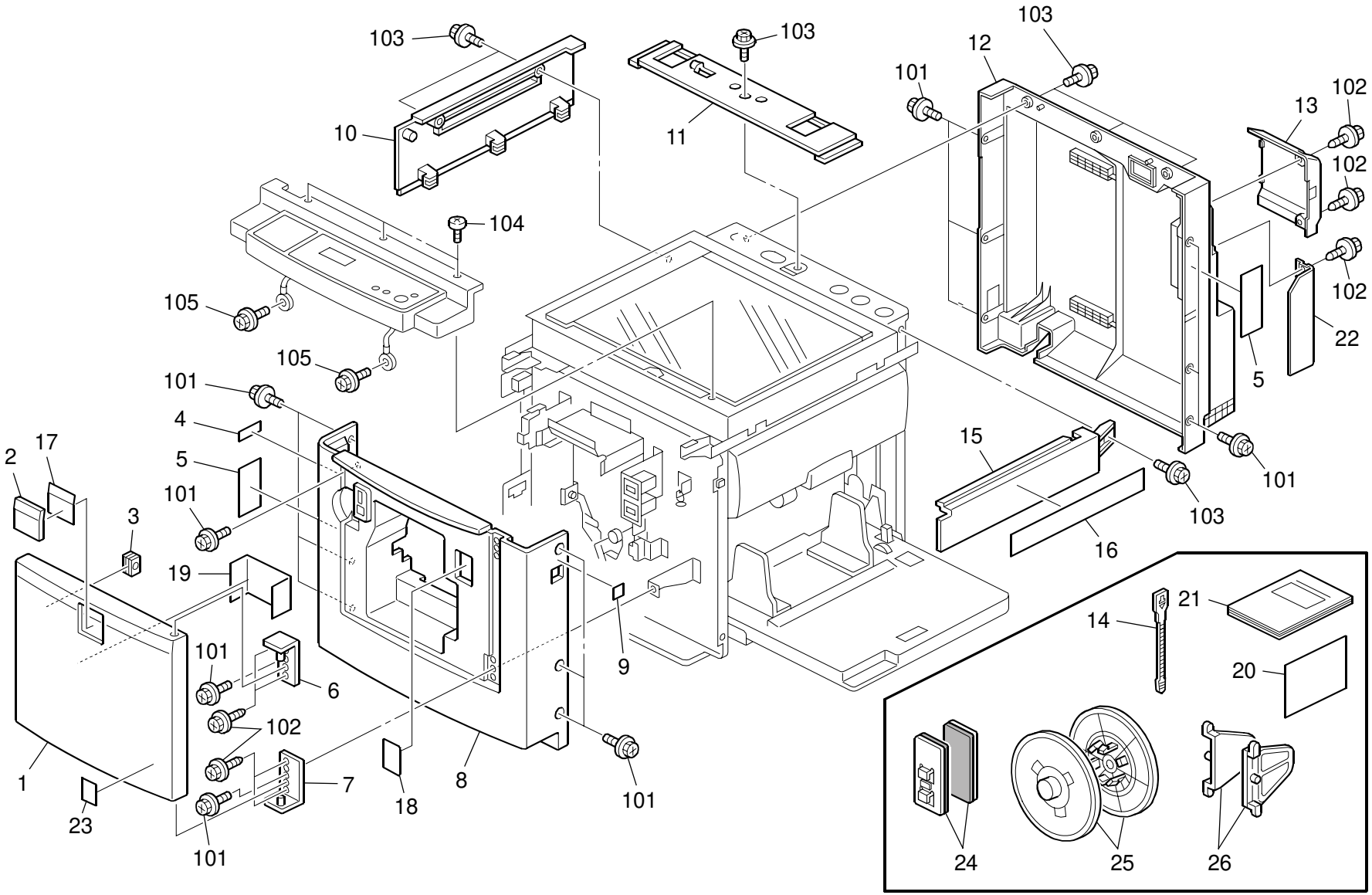

1.Exterior (C275)

Index No.	Part No.	Description	Q'ty Per Assembly
1	C267 1301	Cover:Door	1
2	B132 1531	Panel:Logo	1
3	AG07 0514	Magnet Catch	1
4	C267 1341	Decal:Main Switch:CHN	1
5	C252 1341	Decal:Caution Chart	2
6	C267 1311	Hinge:Door:Upper:Ass'y	1
7	C267 1312	Hinge:Door:Lower:Ass'y	1
8	C267 1302	Cover:Front	1
9	C238 1352	Decal - Paper Table	1
10	C267 1306	Cover:Scanner:Left	1
11	B039 1303	Rear Scanner Cover	1
12	C275 1303	Cover:Rear	1
13	C275 1307	Cap:UC2	1
14	2803 0006	Cord Binder	1
15	C267 1305	Cover:Scanner:Right	1
16	C271 1330	Decal:Master Set Instructions:PS	1
17	C275 1351	Sheet:EMBLEM:RIC:CHN	1
17	C275 1352	Sheet:EMBLEM:RIC:AA	1
17	C275 1361	Sheet:EMBLEM:GES:CHN	1
17	C275 1362	Sheet:EMBLEM:GES:AA	1
17	C275 1381	Sheet:EMBLEM:STD	1
18	C249 1356	Counter Sheet	1
19	C267 1331	Sheet:Receiving Sub-unit:Door:Front	1
20	C271 8676	Wall Chart:A3:English	1
20	C271 8678	Wall Chart:A3:CHN	1
21	C275 8602	Operating Instructions:STD	1
21	C275 8603	Operating Instructions:RIC:CHN	1
21	C275 8604	Operating Instructions:GES:CHN	1
21	C275 8605	Operating Instructions:AA	1
21	C275 8608	Operating Instructions:AM	1
22	C275 1308	Cap:FVLT	1
23	AA00 1468	Decal:ENERGY-STAR	1
23	AA00 1477	Decal:ENERGY-STAR	1
24	C238 2770	Paper Side Pad	2
25	C238 2243	Master Flange - MH	2

Index No.	Part No.	Description	Q'ty Per Assembly
25	C238 2244	Flange:Master:50.8/20	2
26	C267 4493	Guide:Paper:Side Fence	2
101	0451 4008N	Tapping Screw:4x8	
102	0450 4010N	Tapping Screw:M4x10	
103	0451 3008N	Tapping Screw - M3x8	
104	0353 0040N	Screw - M3x4	
105	0451 3006N	Tapping Screw - 3x6	

2.Operation Panel (C275)

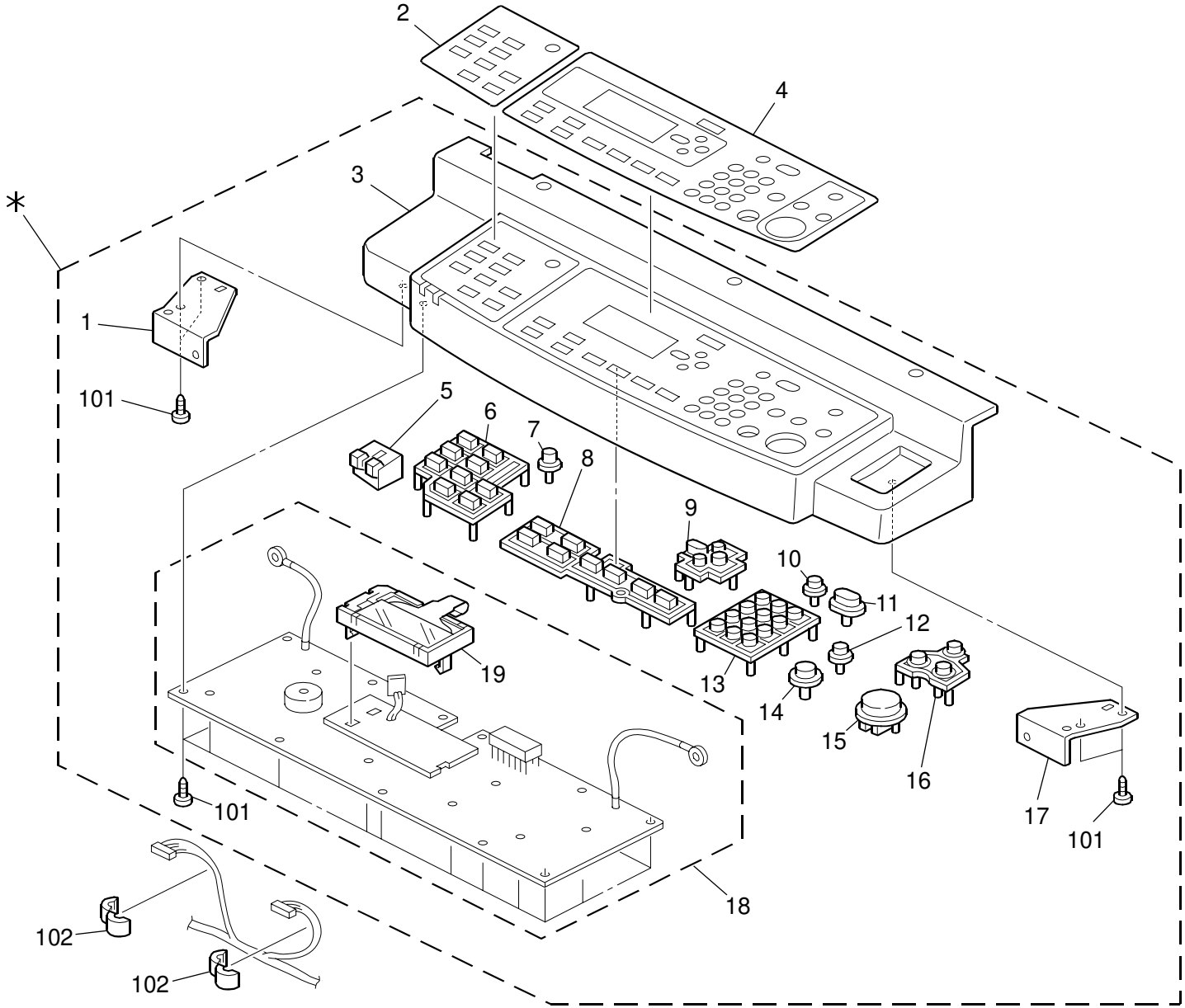

2.Operation Panel (C275)

Index No.	Part No.	Description	Q'ty Per Assembly
*	C271 1451	Operation Panel:EXP:Ass'y	1
1	C267 1496	Bracket:Operation Sub-unit:Left	1
2	C271 1481	Sheet:Operation Sub-unit:Left:English	1
2	C267 1483	Sheet:Operation Sub-unit:Left:EU	1
2	C271 1485	Sheet:Operation Sub:Left:Chinese	1
3	C271 1460	Case:Operation Sub-unit	1
4	C267 1480	Sheet:Operation Sub-unit:Right:English	1
4	C267 1482	Sheet:Operation Sub-unit:Right:EU	1
4	C267 1484	Sheet:Operation Sub-unit:Right:Chinese	1
5	C267 1495	Lens:LED:Operation Sub-unit	1
6	C271 1474	Keytop:Memory	1
7	C267 1479	Keytop:User Tools	1
8	C267 1475	Keytop:Magnification	1
9	C267 1477	Keytop:Return	1
10	C267 1471	Keytop:Program	1
11	C267 1492	Keytop:Reset	1
12	C267 1476	Keytop:Try Print	1
13	C267 1470	Keytop:Numeric	1
14	C267 1473	Keytop:Clear/Stop	1
15	C267 1472	Keytop:Start	1
16	C267 1478	Keytop:Contenuance	1
17	C267 1497	Bracket:Operation Sub-unit:Right	1
18	C271 5162	PCB:OPE	1
19	B129 1495	LCD	1

Index No.	Part No.	Description	Q'ty Per Assembly
101	0452 3008N	Tapping Screw - M3x8	
102	1607 2074	Ferrite Core:K1 NFR-08-ABK0	

3.Scanner Unit 1 (C275)

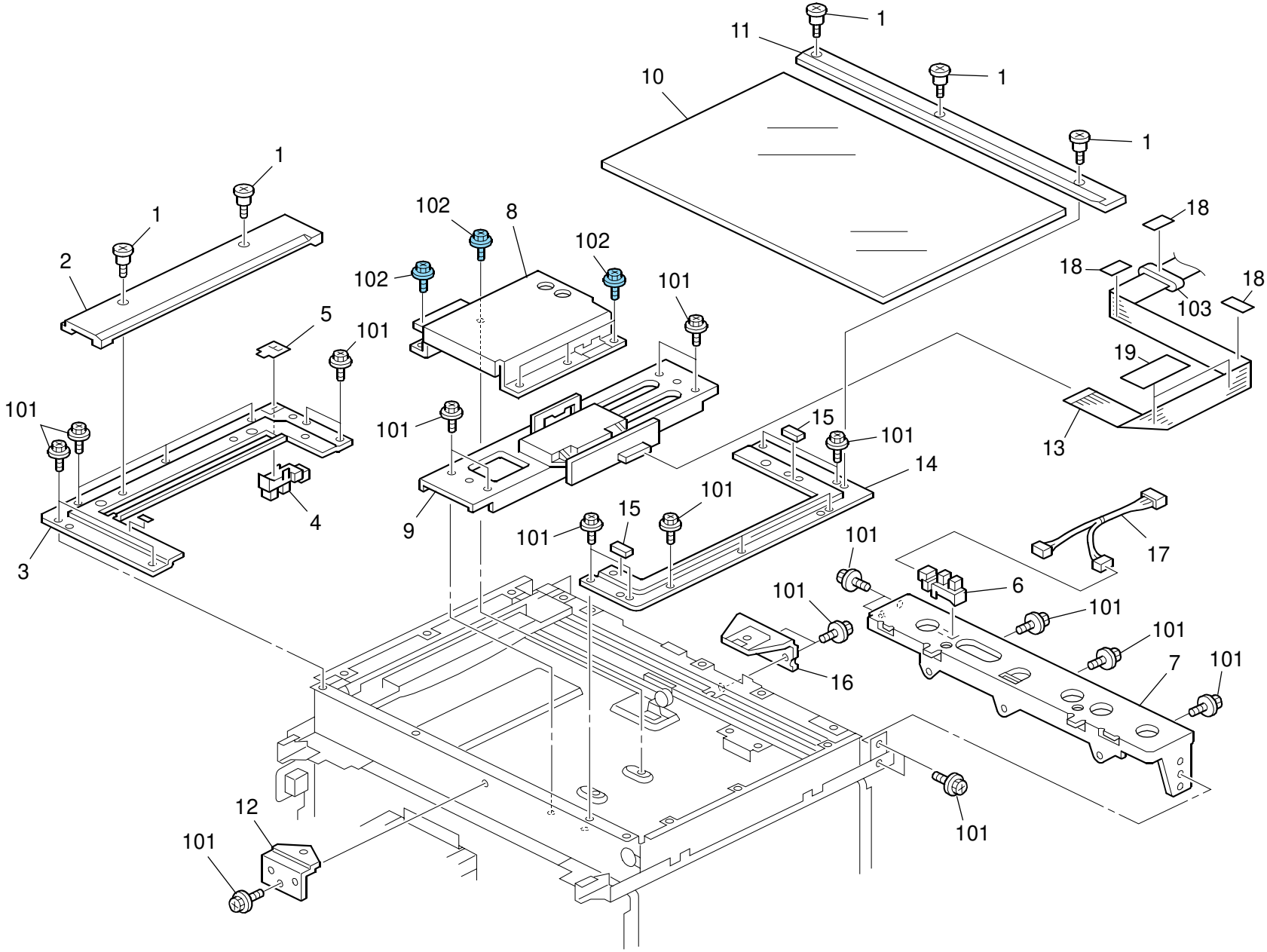

3.Scanner Unit 1 (C275)

Index No.	Part No.	Description	Q'ty Per Assembly
1	B390 1759	Shaft:Scale	5
2	C267 1660	Scale:Left:Ass'y	1
3	B039 1710	Left Scanner Bracket	1
4	AW02 0156	Photointerruptor:EE-SX4235A-P2	1
5	A193 1793	Scanner Home Sensor Stopper	1
6	GW02 0020	Photointerruptor:LG248NI1	1
7	B039 1068	ADF Bracket	1
8	B276 1808	Inner Cover	1
9	B259 1812	Lens Unit	1
10	A250 1752	Exposure Glass	1
11	B268 1751	Scale - Inner Back	1
12	B039 1666	Bracket - Operation Panel	1
13	C267 5283	Harness:SBU:Ass'y	1
14	B039 1712	Right Scanner Bracket	1
15	5442 1924	Exposure Glass Cushion	2
16	B039 1658	Rear Scale Bracket	1
17	C267 5284	Harness:Scanner:Ass'y	1
18	B039 1829	Flat Cable Sheet	3
19	B150 1840	Sheet:Flat Cable:35x70	2

Index No.	Part No.	Description	Q'ty Per Assembly
101	0451 3006N	Tapping Screw - 3x6	
102	0454 3006Q	Tapping Screw - M3x6	
103	1607 1303	Ferrite Core - F5FF	

4.Scanner Unit 2 (C275)

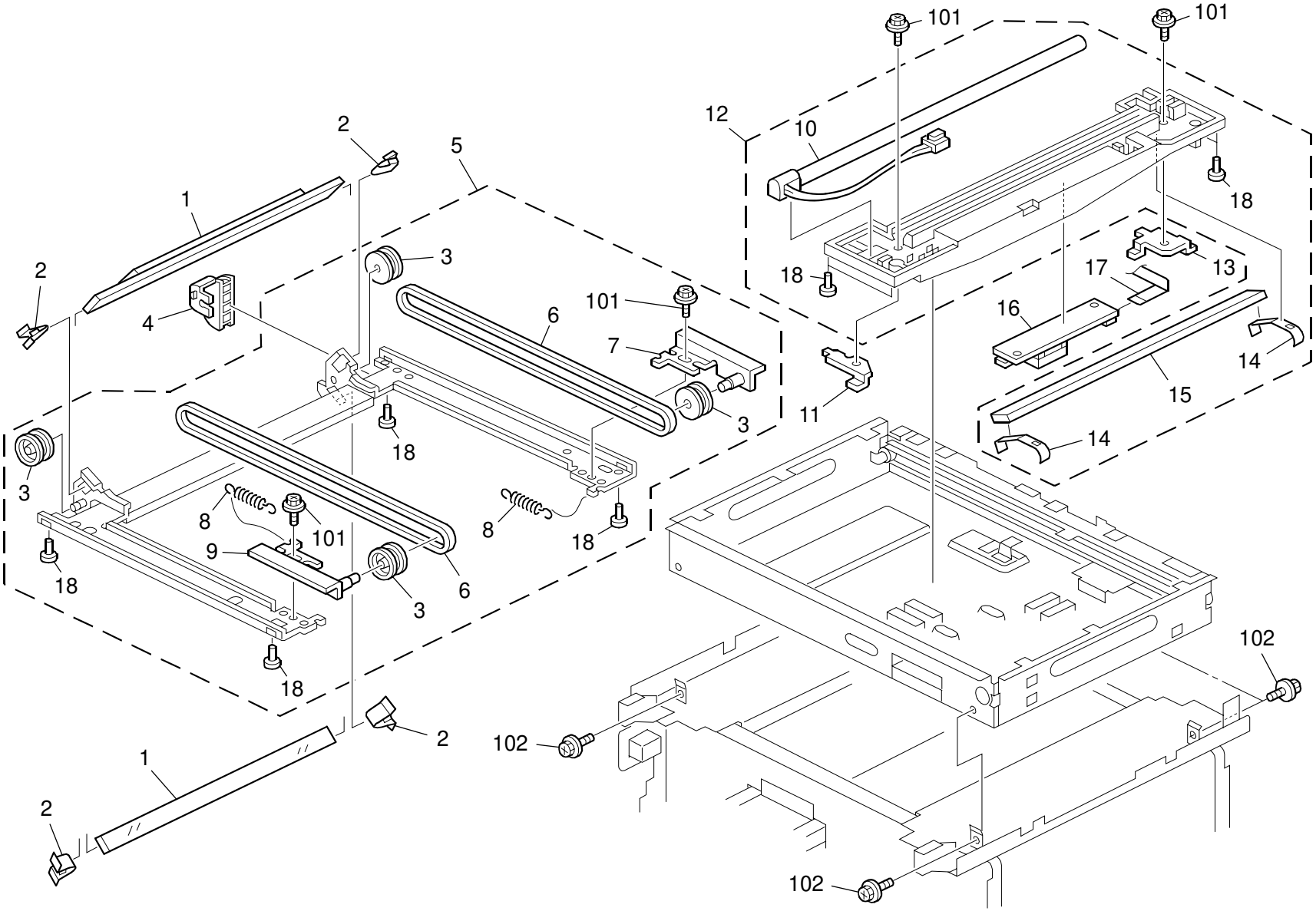

4.Scanner Unit 2 (C275)

Index No.	Part No.	Description	Q'ty Per Assembly
1	B039 1787	2nd Mirror	2
2	B039 1781	2nd Mirror Holder	4
3	B039 1785	Scanner Drive Pulley	4
4	B121 1782	Flexible Board Guide	1
5	B259 1768	Carriage No.2 Ass'y	1
6	B039 1784	Scanner Drive Belt	2
7	B259 1778	Idler Belt Pulley Bracket - Rear	1
8	B039 1790	Tension Spring	2
9	B259 1776	Idler Belt Pulley Bracket - Front	1
10	B121 1757	Xenon Lamp MM8 26000/70	1
11	B039 1758	Timing Belt Holder - Front	1
12	B121 1751	No.1 Carriage Ass'y	1
13	B039 1759	Timing Belt Holder - Rear	1
14	B121 1766	No.1 Mirror Clamp	2
15	B121 1762	No.1 Mirror	1
16	B259 1763	Xenon Lamp Stabilizer	1
17	C267 5282	Harness:Scanner:Stabilizer	1
18	G570 2730	Slider - Scanner	8

Index No.	Part No.	Description	Q'ty Per Assembly
101	0451 3006N	Tapping Screw - 3x6	
102	0451 3008N	Tapping Screw - M3x8	

5.Scanner Unit 3 (C275)

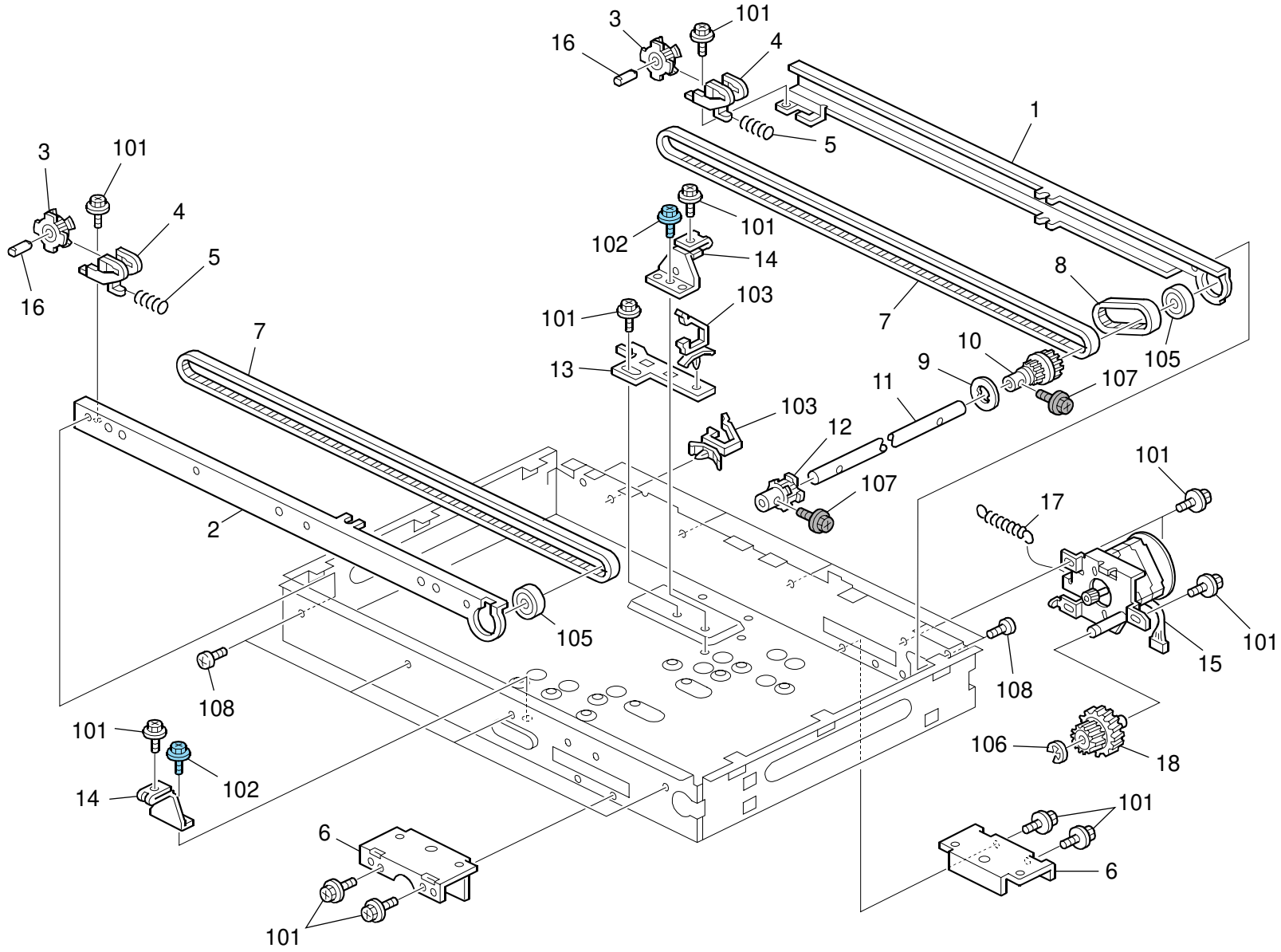

5.Scanner Unit 3 (C275)

Index No.	Part No.	Description	Q'ty Per Assembly
1	B039 1663	Rear Scanner Frame	1
2	B039 1662	Front Scanner Frame	1
3	B039 1703	Pulley - 37Z	2
4	B039 1705	Bracket:Idler	2
5	B039 1704	Spring - Timing Pulley	2
6	B121 1667	Lens Stay Bracket	2
7	B039 1697	Timing Belt - 1058.25XL	2
8	B121 1696	Timing Belt L147	1
9	B039 1695	Flange - Pulley	1
10	B039 1694	Pulley - 37/41Z	1
11	B259 1691	Scanner Drive Shaft	1
12	B039 1692	Pulley - 37Z	1
13	B039 1668	Bracket - Stabilizer Harness	1
14	B121 1664	Bracket - Timing Belt	2
15	B039 1670	Scanner Drive Motor - DC3.6V 2.88W	1
16	B259 1702	Pulley Shaft	2
17	B039 1683	Tension Spring - Stepper Motor	1
18	B121 1680	Gear - 53Z/60Z	1

Index No.	Part No.	Description	Q'ty Per Assembly
101	0451 3006N	Tapping Screw - 3x6	
102	0454 3006Q	Tapping Screw - M3x6	
103	1105 0511	Harness Clamp - LWS-0306ZC	
105	0805 3530	Bearing 8x22x7	
106	0720 0060E	Retaining Ring - M6	
107	0360 3006P	Screw - M3x6	
108	0453 3006N	Tapping Screw - M3x6	

6.Paper Table Section (C275)

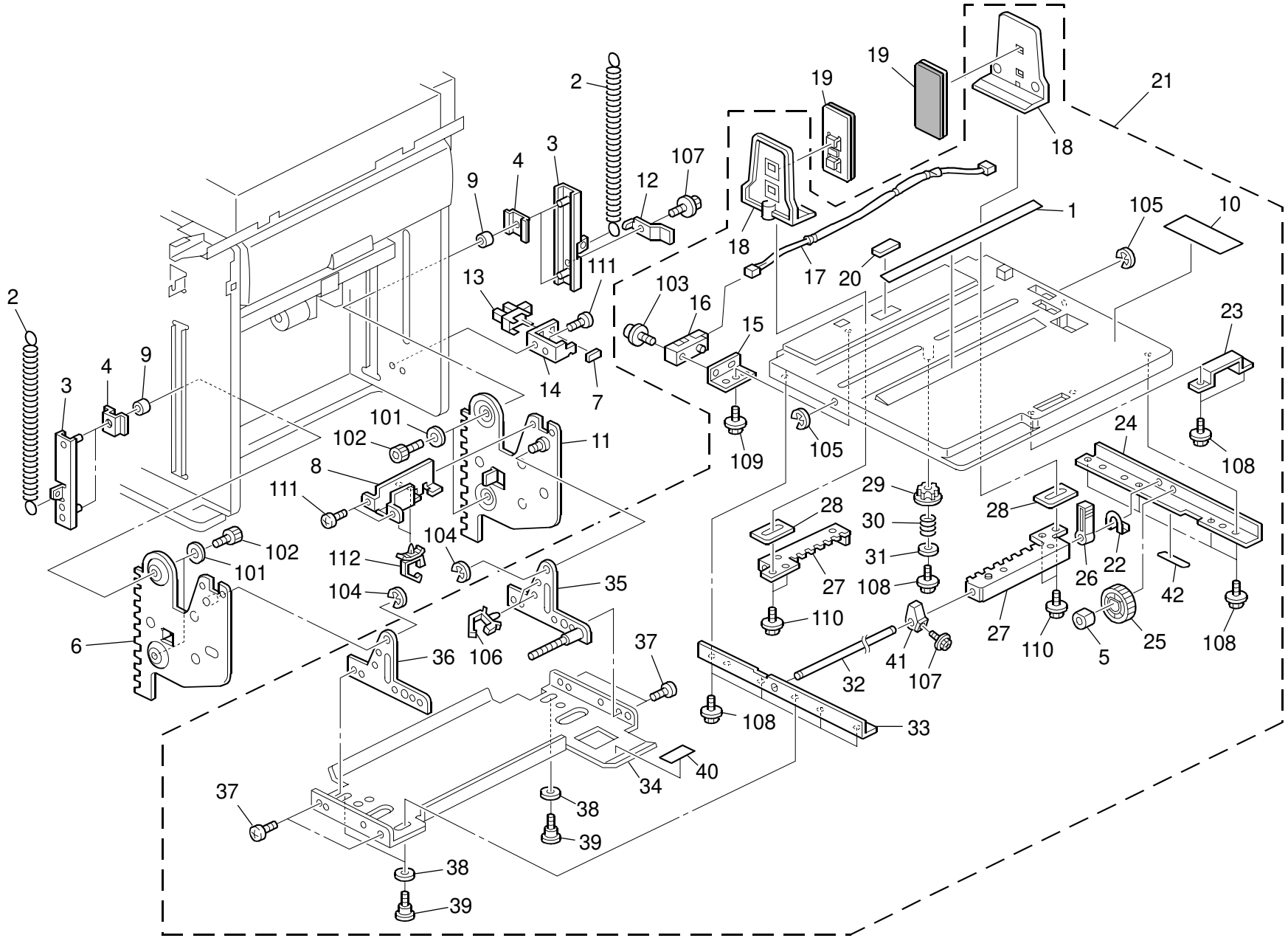

6.Paper Table Section (C275)

Index No.	Part No.	Description	Q'ty Per Assembly
1	C267 2998	Decal:Size Indication:Paper Feed	1
2	C267 2779	Spring:Auxiliary:Rise:Paper Feed Tray	2
3	C238 2800	Tray Lift Bracket	2
4	C238 2805	Tray Lift Slider	4
5	C231 2965	Core	1
6	C267 2790	Rack:Rise:Paper Feed Tray:Front:Ass'y	1
7	A267 1820	Sheet - Photointerrupter	1
8	C267 2793	Stay:Harness:Sensor:Paper	1
9	5606 2310	Roller	4
10	C238 2996	Decal - Paper Set	1
11	C267 2796	Rack:Rise:Paper Feed Tray:Rear:Ass'y	1
12	C238 2806	Tray Position Feeler	1
13	AW02 0141	Photointerruptor	1
14	C238 2825	Sensor Bracket	1
15	C238 2986	Sensor Bracket - Paper Feed Tray	1
16	AW01 0109	Photo Reflection Sensor:PS117ED1	1
17	C267 5271	Harness:Paper Feed Tray:Ass'y	1
18	C267 2980	Side Fence:Paper Feed Tray	2
19	C238 2770	Paper Side Pad	2
20	C249 2840	Paper Feed Tray Pad	1
21	C275 2710	Paper Feed Tray:CHN:Ass'y	1
22	C249 2790	Spring Plate:Spacer:Paper Feed Tray	1
23	C267 2758	Plate:Magnet Catch:Paper Feed Tray	1
24	C267 2754	Stay:Paper Feed Tray:Rear	1
25	C272 2964	Adjusting Pin:Front Rear:Paper Feed Tray	1
26	C272 2973	Knob:Lock:Side Fence	1
27	C238 2981	Rear Side Fence Rack	2
28	C267 2983	Spacer:Side Fence	2
29	C238 2987	Side Fence Gear	1
30	C231 2985	Spring	1
31	C267 6168	Washer:Slide:End Fence	1
32	C267 2770	Shaft:Lock:Side Fence	1
33	C267 2753	Stay:Paper Feed Tray:Front	1
34	C267 2756	Base:Paper Feed Tray	1
35	C267 2761	Arm:Rear:Paper Feed Tray:Peen	1

Index No.	Part No.	Description	Q'ty Per Assembly
36	C267 2760	Arm:Front:Paper Feed Tray	1
37	C244 1098	Pan Head Screw:Lock:M4x4	4
38	C231 2976	Washer	3
39	C612 1800	Screw:Lens:Guide	3
40	C238 2967	Decal:Adjustment Scale:Paper Feed	1
41	C231 2971	Lock Cam	1
42	C249 2944	Table Sheet	1
101	0701 0040N	Washer:DIA4	
102	0594 0080N	Hexagonal Set Screw - M4x8	
103	0951 3012N	Screw:Polished Round:M3x12	
104	0720 0060E	Retaining Ring - M6	
105	0720 0040E	Retaining Ring - M4	
106	1105 0516	Clamp	
107	0451 3006N	Tapping Screw - 3x6	
108	0450 4008N	Tapping Screw - M4x8	
109	0450 3008N	Tapping Screw - M3x8	
110	0450 3006N	Tapping Screw - M3x6	
111	0314 0040N	Pan Head Screw - M4x4	
112	1105 0534	Clamp	

7.Paper Registration 1 (C275)

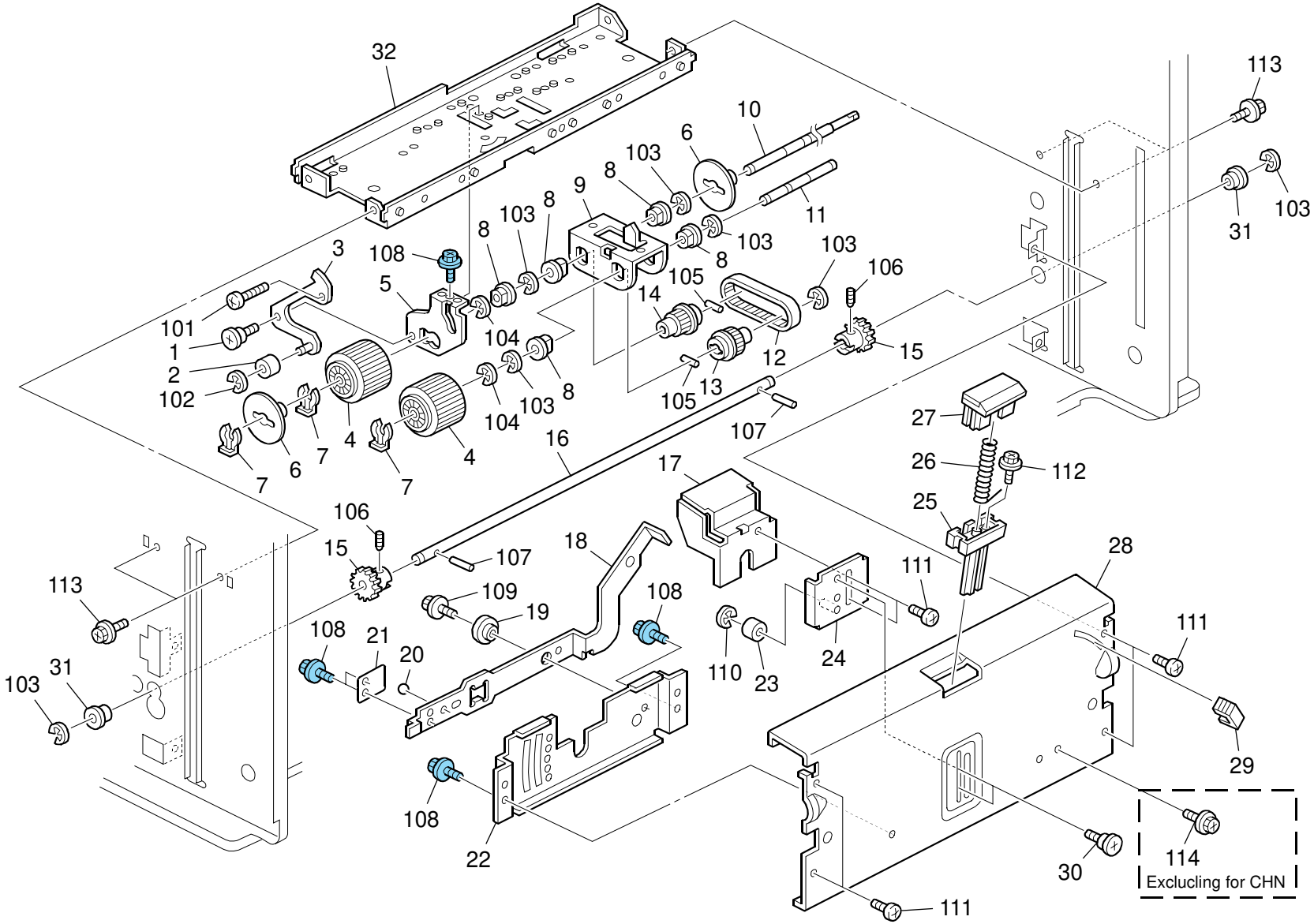

7.Paper Registration 1 (C275)

Index No.	Part No.	Description	Q'ty Per Assembly
1	C267 2944	Screw:Actuator:Surface Of Paper Sensor	1
2	C257 2869	Feeler Roller	1
3	C267 2941	Actuator:Surface Of Paper Sensor:Peen	1
4	**C267 2802**	**Roller:Paper Feed:Ass'y**	**2**
5	C267 2917	Retainer:Arm:Paper Feed	1
6	5606 2066	Paper Feed Guide Disc	2
7	C252 2810	Grip Rings:Mm8	3
8	C252 1080	Bushing	5
9	C267 2806	Arm:Paper Feed	1
10	C271 2808	Shaft:Paper Feed Roller	1
11	C271 2809	Shaft:Pickup	1
12	C267 2813	Timing Belt:B82MXL6.4	1
13	C267 2812	Pulley:Pickup:Paper Feed	1
14	C267 2811	Pulley:Drive:Roller:Paper Feed	1
15	C201 5051	Pinion - 24T	2
16	C267 2781	Shaft:Rise:Paper Feed Tray	1
17	C267 2827	Adjusting Pin:Separation Sub-unit	1
18	C267 2845	Lever:Separation Change	1
19	C209 5220	Spacer - 4x20x6	1
20	5501 8195	Steel Ball 3/16	1
21	C238 2929	Spring Plate	1
22	C267 2844	Bracket:Separation Change	1
23	C231 2922	Pressure Roller	1
24	C261 2835	Adjusting Pin	1
25	C261 2831	Holder:Spring:Separation	1
26	C261 2832	Compression Spring:Separation Pad	1
27	**C267 2819**	**Separation Pad:Ass'y**	**1**
27	**C267 2820**	**Separation Pad:CHN:Ass'y**	**1**
28	C267 2824	Drum Stay:Paper Feed:Ass'y	1
29	C267 2934	Knob:Lever	1
30	C261 2844	Screw:Separation Unit	2
31	C203 5135	Bushing - 10x14x5.9	2
32	C267 2916	Stay:Paper Feed	1

Index No.	Part No.	Description	Q'ty Per Assembly
101	0353 0120N	Screw M3x12	
102	0720 0030E	Retaining Ring - M3	
103	0720 0080E	Retaining Ring - M8	
104	0720 0070E	Retaining Ring - M7	
105	0633 0160G	Parallel Pin - 3x16mm	
106	0574 0040E	Hexagon Headless Set Screw - M4x4	
107	0624 0160E	Spring Pin - 4x16mm	
108	0454 3006Q	Tapping Screw - M3x6	
109	0451 4010N	Tapping Screw:4x10	
110	0720 0040E	Retaining Ring - M4	
111	0314 0040N	Pan Head Screw - M4x4	
112	0450 3006N	Tapping Screw - M3x6	
113	0451 4006N	Tapping Screw - 4x6	
114	0451 4008N	Tapping Screw:4x8	

8.Paper Registration 2 (C275)

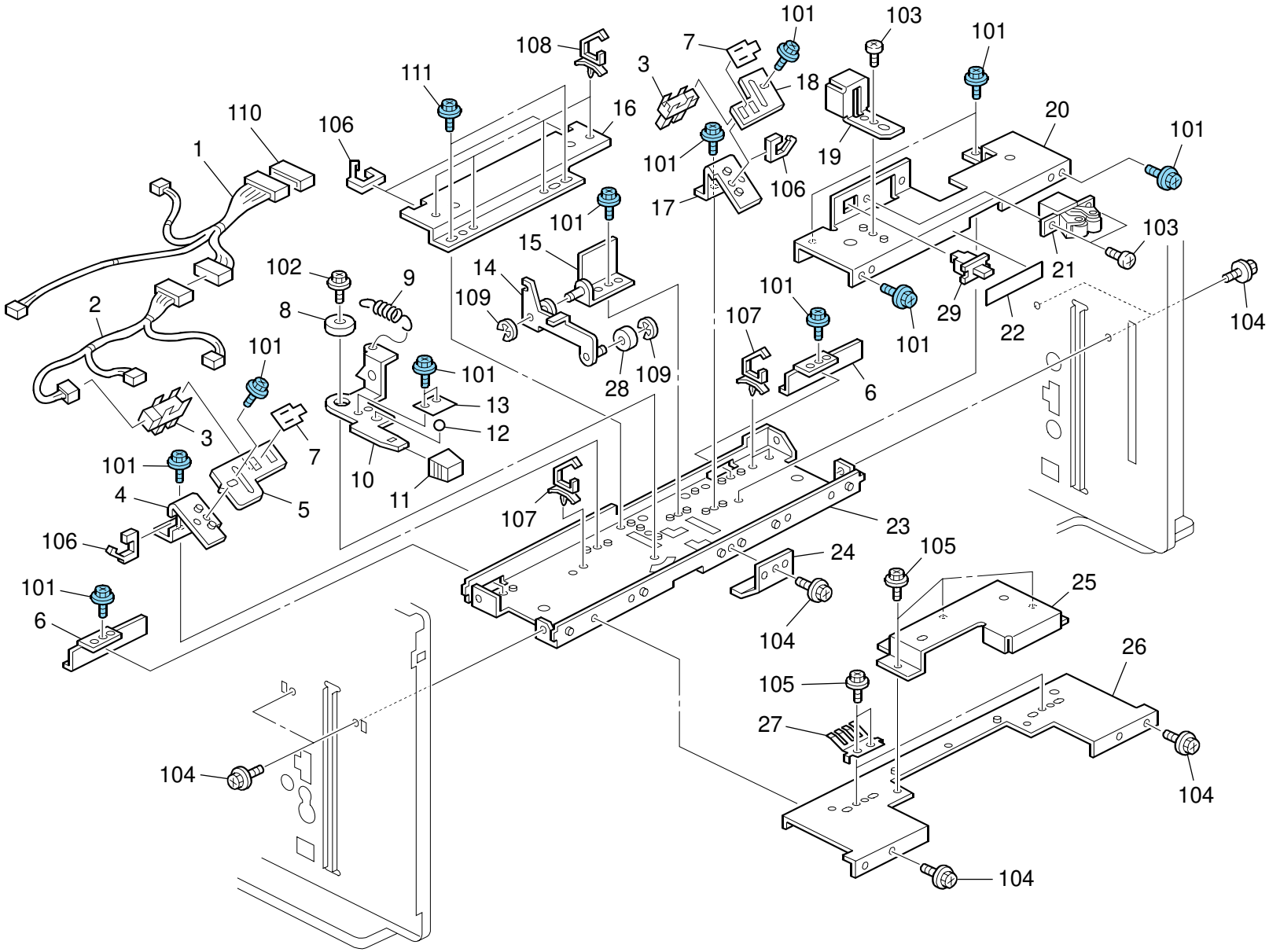

8.Paper Registration 2 (C275)

Index No.	Part No.	Description	Q'ty Per Assembly
1	C267 5273	Harness:Connecting:Stay:Plotter:Ass'y	1
2	C267 5272	Harness:Stay:Ass'y	1
3	AW02 0141	Photointerruptor	2
4	C267 2946	Bracket:Surface Of Paper Sensor	1
5	C267 2947	Holder:Surface Of Paper Sensor	1
6	C267 2953	Cover:Inner Back:Stay:Paper Feed	2
7	A267 1820	Sheet - Photointerrupter	2
8	C209 5220	Spacer - 4x20x6	1
9	C238 2939	Spring	1
10	C267 2924	Lever:Pressure:Paper Feed Roller	1
11	C267 2934	Knob:Lever	1
12	5501 8195	Steel Ball 3/16	1
13	C238 2929	Spring Plate	1
14	C267 2931	Arm:Pressure:Paper Feed:Peen	1
15	C238 2936	Arm Bracket	1
16	C267 2918	Bracket:Stay:Paper Feed	1
17	C267 2951	Bracket:Arm:Surface Of Paper Sensor	1
18	C267 2952	Holder:Surface Of Paper Sensor	1
19	C267 2992	Cover:On Off Detector:Plotter:Lower Middle	1
20	C267 2993	Bracket:On Off Detector:Right Lower: Machine Or Copier:2	1
21	C267 2994	Holder:Lock:Plotter	1
22	C267 2995	Decal:Paper Feed Pressure:English	1
22	C267 2996	Decal:Paper Feed Pressure:CHN	1
23	C267 2916	Stay:Paper Feed	1
24	C267 2816	Stopper:Arm	1
25	C267 2956	Cover:Auxiliary:Harness:Stay:Paper Feed	1
26	C267 2954	Cover:Harness:Stay:Paper Feed	1
27	C267 2958	Ground Plate:Cover:Stay:Paper Feed	2
28	C231 2922	Pressure Roller	1
29	G020 5626	Push Switch	1

Index No.	Part No.	Description	Q'ty Per Assembly
101	0454 3006Q	Tapping Screw - M3x6	
102	0451 4010N	Tapping Screw:4x10	
103	0353 0060N	Bind Screw - M3x6	
104	0451 4006N	Tapping Screw - 4x6	
105	0453 3006N	Tapping Screw - M3x6	
106	1105 0522	Edge Saddle - LES0510	
107	1105 0516	Clamp	
108	1105 0511	Harness Clamp - LWS-0306ZC	
109	0720 0040E	Retaining Ring - M4	
110	1102 8797	Connector:1-292215-4	
111	0454 4006Q	Tapping Screw:4x6	

9.Paper Feed Section (C275)

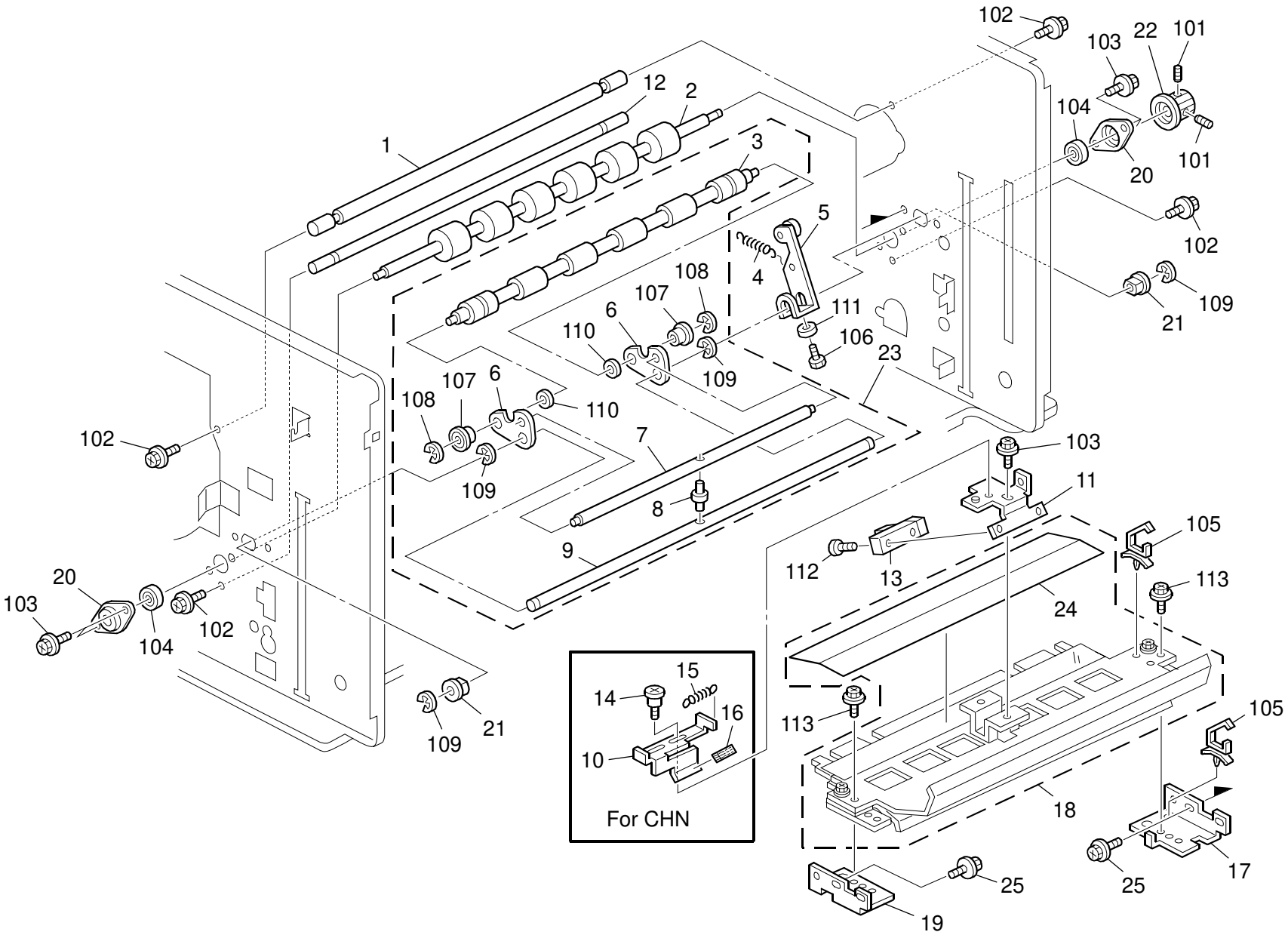

9.Paper Feed Section (C275)

Index No.	Part No.	Description	Q'ty Per Assembly
1	C267 1056	Shaft:Stay:Machine Or Copier:DIA12	1
2	C261 2881	Feed Roller:Lower	1
3	C238 2894	Upper Registration Roller	1
4	C252 2878	Spring:Pressure:Feed Roller	1
5	C261 2875	Arm:Pressure:Feed Roller:Ass'y	1
6	C275 2895	Arm:Feed Roller:Upper	2
7	C264 2898	Shaft:Arm:Feed Roller:Upper	1
8	C231 2766	Pressure Pin	1
9	C261 2872	Shaft:Swivel:Feed Roller:Upper	1
10	C238 2855	Sensor Cleaning Lever	1
11	C238 2921	Registration Sensor Bracket	1
12	C261 1056	Shaft:Stay:Machine Or Copier	1
13	C257 5807	Photo Reflection Sensor:GP2A25	1
14	C261 2844	Screw:Separation Unit	1
15	C238 2853	Sensor Cleaning Spring	1
16	C238 2856	Sensor Cleaning Brush	1
17	C275 2870	Bracket:Guide Plate:Rear	1
18	C267 2896	Guide Plate:Feed Roller:Ass'y	1
19	C275 2869	Bracket:Guide Plate:Front	1
20	C267 2267	Bearing Case:Transmission	2
21	C252 1080	Bushing	2
22	C229 2907	Registration Roller Pulley - 14Z	1
23	C275 2871	Feed Roller:Upper:Ass'y	1
24	C267 2897	Sheet:Guide Plate:Feed Roller:Upper	1
25	C275 2898	Screw:M4x6	2

Index No.	Part No.	Description	Q'ty Per Assembly
101	0574 0050E	Hexagon Headless Set Screw - M4x5	
102	0451 4006N	Tapping Screw - 4x6	
103	0451 3006N	Tapping Screw - 3x6	
104	0740 3008	Ball Bearing - 8x22x7	
105	1105 0511	Harness Clamp - LWS-0306ZC	
106	0594 0080N	Hexagonal Set Screw - M4x8	
107	0741 3706	Ball Bearing - 6x10x3	
108	0720 0040E	Retaining Ring - M4	
109	0720 0080E	Retaining Ring - M8	
110	0701 0060N	Washer DIA6	
111	0701 0040N	Washer:DIA4	
112	0453 3006N	Tapping Screw - M3x6	
113	0451 4008N	Tapping Screw:4x8	

10.Protter Unit 1 (C275)

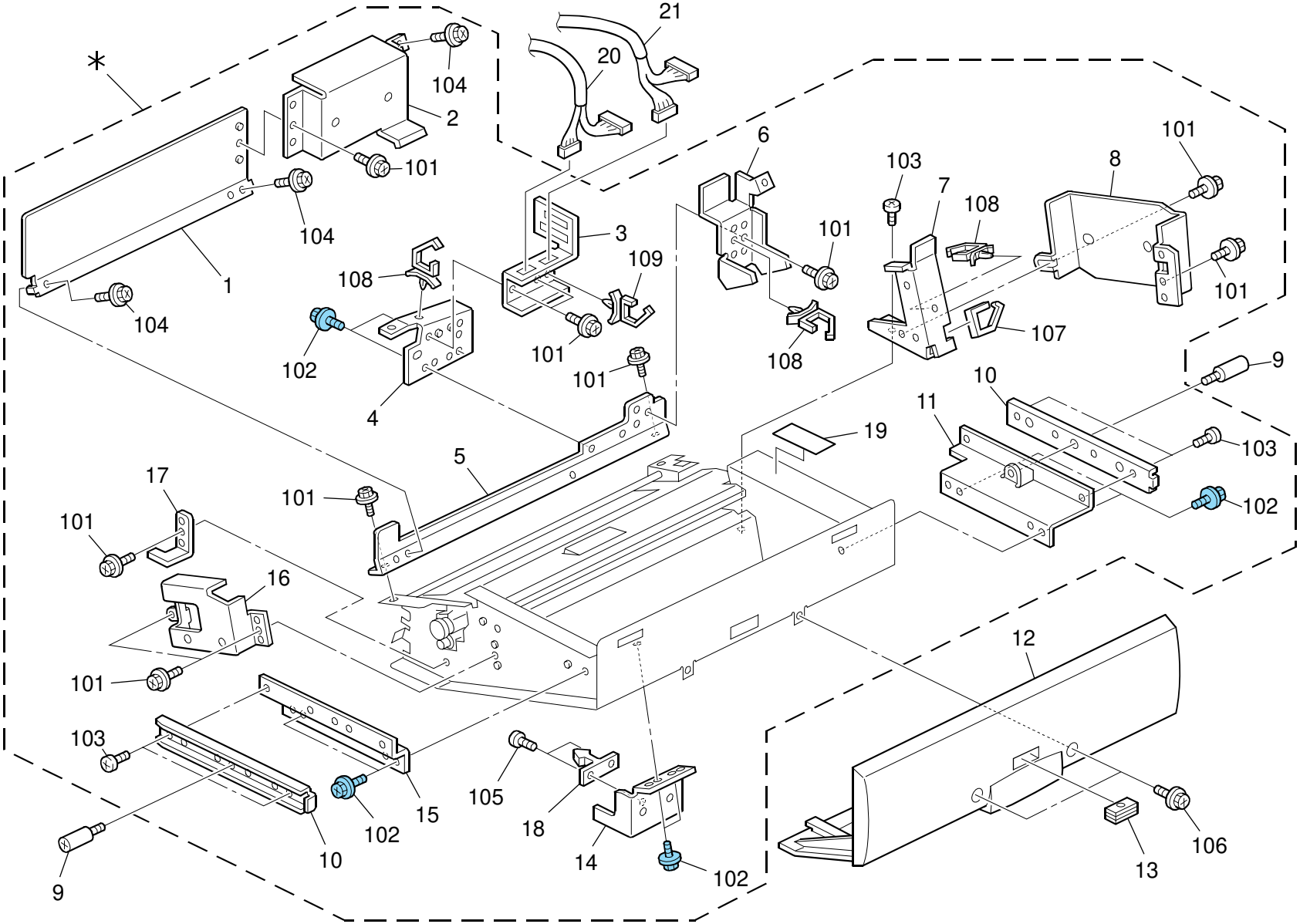

10.Protter Unit 1 (C275)

Index No.	Part No.	Description	Q'ty Per Assembly
*	C275 1910	Plotter:UNI:B4	1
*	C275 1911	Plotter:UNI:LG	1
1	C267 2167	Cover:Harness:Left	1
2	C267 2164	Cover:Harness:Exit:Upper:Plotter	1
3	C267 2174	Bracket:Connector:Plotter	1
4	C267 2182	Bracket:Harness:Left Inner Rear:Plotter	1
5	C267 2173	Cover:Upper:Plotter:2	1
6	C267 2165	Cover:Harness:Exit:Lower:Plotter	1
7	C267 2161	Bracket:Harness:Rear:Plotter	1
8	C267 2177	Cover:Rear:Plotter	1
9	C267 1994	Stopper:Rail:Plotter:Middle	2
10	C267 2186	Slide Rail:Plotter:Inner	2
11	C267 2160	Bracket:Slide Rail:Plotter:Rear	1
12	C267 1304	Cover:Plotter	1
13	AG07 0514	Magnet Catch	1
14	C267 2288	Bracket:On Off Detector:Lower:Plotter:2	1
15	C267 2170	Bracket:Slide Rail:Plotter:Front	1
16	C267 2178	Cover:Front:Plotter	1
17	C267 2166	Bracket:On Off Detector Board:Upper:Plotter	1
18	A659 1272	Door Catch	1
19	C274 1331	Decal:Master Set Instructions:Stopper Guide	1
20	C267 5242	Harness:Connecting:Plotter:1:Ass'y	1
21	C275 5244	Harness:Connecting:Plotter:2:Ass'y	1

Index No.	Part No.	Description	Q'ty Per Assembly
101	0451 3006N	Tapping Screw - 3x6	
102	0454 3006Q	Tapping Screw - M3x6	
103	0353 0040N	Screw - M3x4	
104	0451 4006N	Tapping Screw - 4x6	
105	0353 0060N	Bind Screw - M3x6	
106	0451 4008N	Tapping Screw:4x8	
107	1105 0521	Clamp - LES-1017	
108	1105 0488	Harness Clamp	
109	1105 0534	Clamp	

11.Protter Unit 2 (C275)

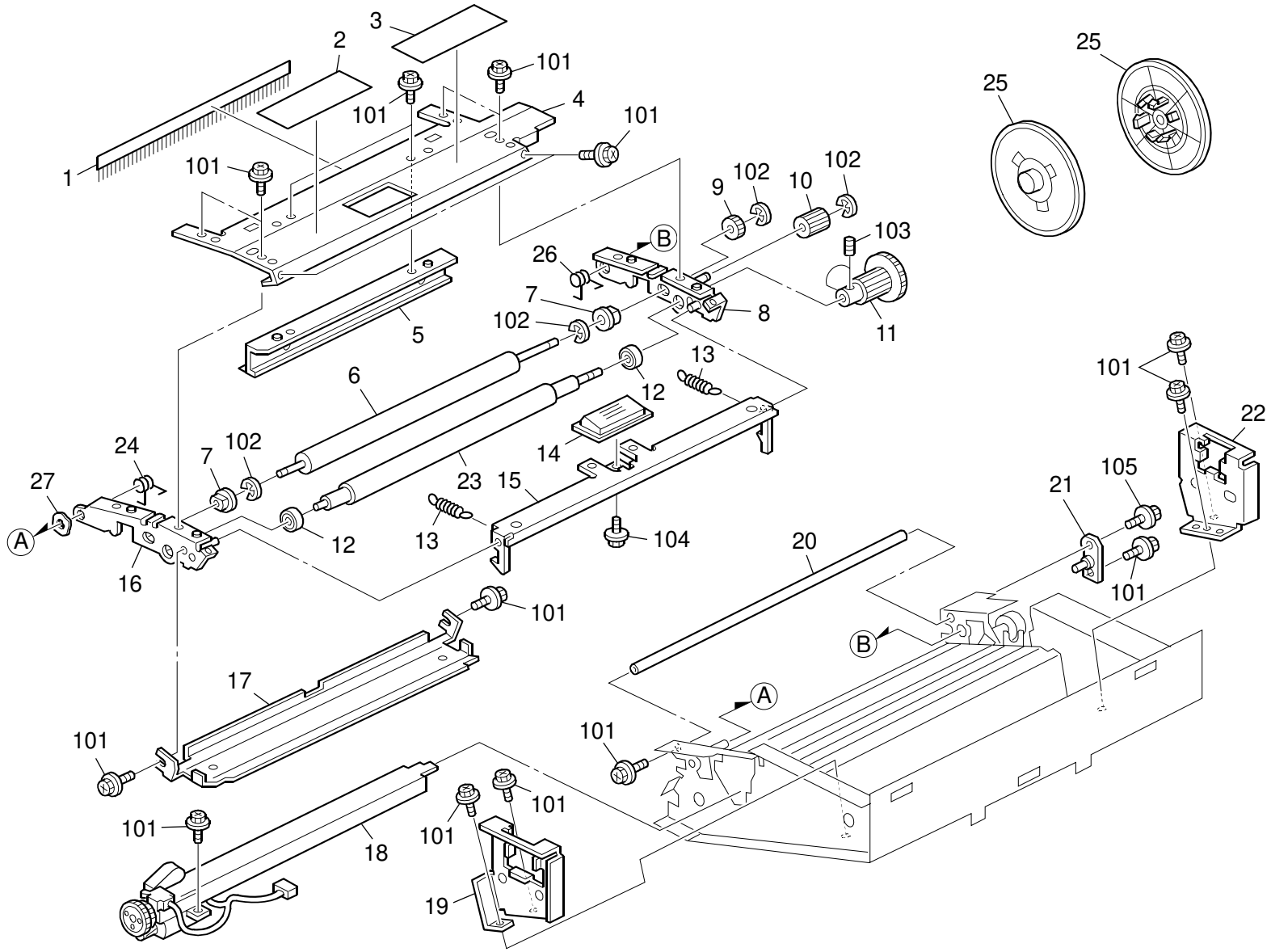

11.Protter Unit 2 (C275)

Index No.	Part No.	Description	Q'ty Per Assembly
1	C252 2281	Discharge Brush:Cutter	1
2	C252 1971	Decal:Open And Close:Plotter:Left	1
3	C252 1972	Decal:Open And Close:Plotter:Left	1
4	C261 2045	Cover:Open And Close:Plotter	1
5	C261 2046	Guide Plate	1
6	C261 2114	Roller:Tension:B4	1
6	C261 2115	Roller:Tension:LG	1
7	H012 1181	Bushing - 6mm	2
8	C261 2030	Rear Plate:Open And Close	1
9	C231 2148	Tension Roller Gear	1
10	C231 2147	Idler Gear	1
11	C231 2146	Platen Roller Gear	1
12	C238 2106	Ball Bearing - 6x13x5mm	2
13	C261 2039	Spring:Lever:Lock:Plotter	2
14	C238 2037	Lever Knob	1
15	C261 2036	Lever:Open And Close:Plotter	1
16	C261 2040	Side Plate:Open And Close:Front:Plotter:Ass'y	1
17	C261 2108	Cover:Open And Close:Lower	1
18	C261 2271	Cutter Unit:B4:Ass'y	1
19	C267 2220	Holder:Master:Front	1
20	C261 1955	Stay:Coupling:Plotter	1
21	C252 1950	Positioning Pin:Coupling:Plotter:Ass'y	1
22	C267 2210	Holder:Master:Rear	1
23	C261 2104	Platen:B4	1
23	C261 2105	Platen:A4/LG	1
24	C238 1962	Front Spring	1
25	C238 2243	Master Flange - MH	2
25	C238 2244	Flange:Master:50.8/20	2
26	C261 1961	Spring:Open And Close:Rear:Plotter	1
27	C217 5102	Spring Washer	1

Index No.	Part No.	Description	Q'ty Per Assembly
101	0451 3006N	Tapping Screw - 3x6	
102	0720 0040E	Retaining Ring - M4	
103	0574 0040E	Hexagon Headless Set Screw - M4x4	
104	0450 3008N	Tapping Screw - M3x8	
105	0451 3008N	Tapping Screw - M3x8	

12.Protter Unit 3 (C275)

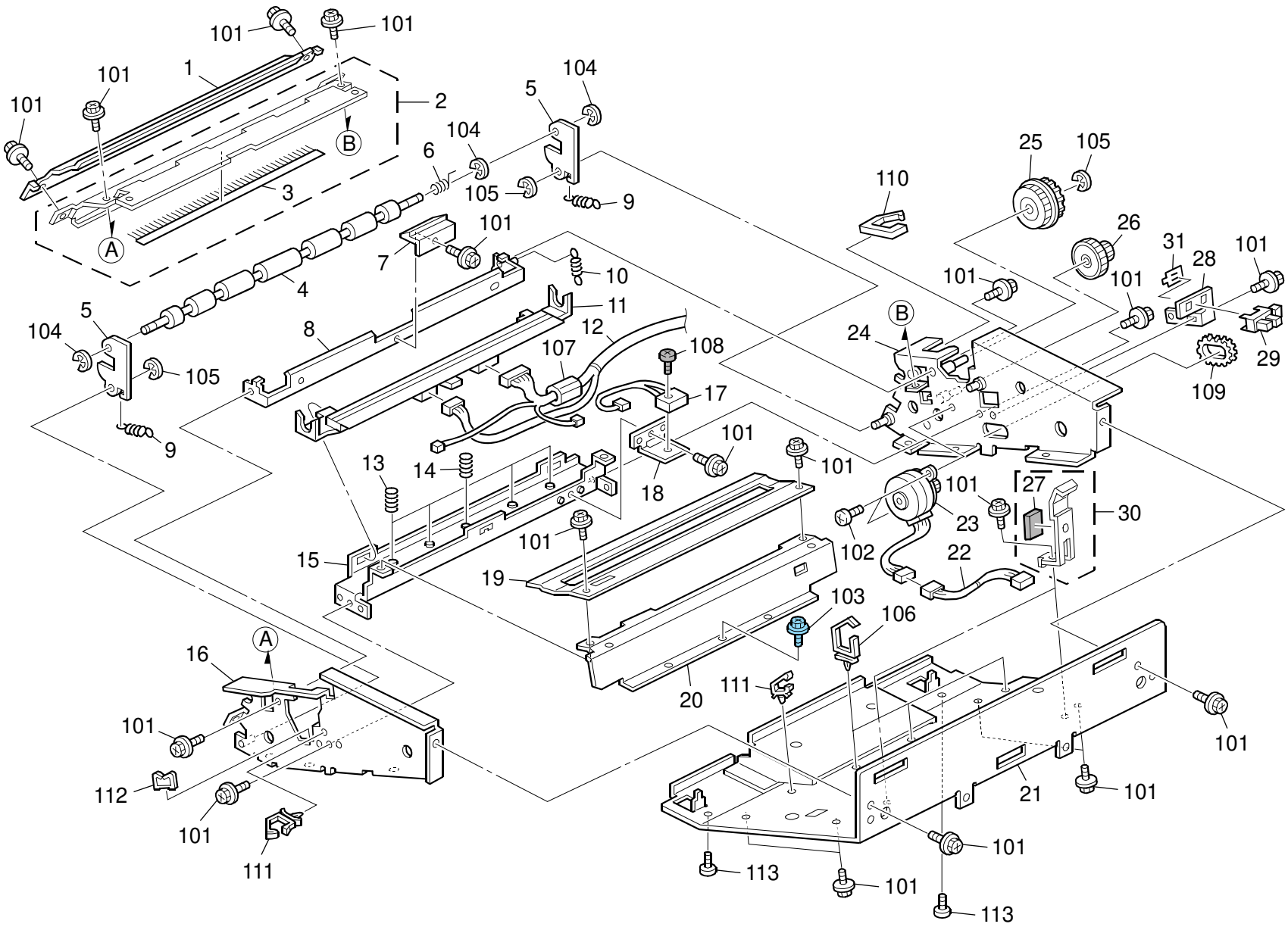

12.Protter Unit 3 (C275)

Index No.	Part No.	Description	Q'ty Per Assembly
1	C252 2085	Guide Plate:Brake:Upper:Plotter	1
2	C252 2082	Guide Plate:Brake:Lower:Plotter:Sub-ass'y	1
3	C252 2281	Discharge Brush:Cutter	1
4	C261 2077	Roller:Brake:Plotter	1
5	C267 2064	Lever:Roller:Brake	2
6	C267 2078	Bracket Shoe:Roller:Brake:Plotter	1
7	C274 2057	Display Sub-unit:Leading Edge:Master:Printing	1
8	C261 2052	Positioning Plate:Master	1
9	C267 2066	Spring:Roller:Brake:Plotter	2
10	C261 2054	Spring:Positioning Plate:Master	1
11	C261 2151	Thermal Head:B4	1
12	C267 5240	Harness:Imaging Unit:Ass'y	1
13	C252 2157	Spring:Thermal Head:Both Ends	4
14	C261 2156	Spring:Thermal Head:Middle	1
15	C261 2026	Base:Thermal Head	1
16	C267 2020	Side Plate:Fix:Front:Plotter:Ass'y	1
17	C257 5854	Master Duct Sensor	1
18	C261 2279	Bracket:Sensor:Master	1
19	C252 2092	Guide Plate:Thermal Head:Ass'y	1
20	C267 2095	Guide Plate:Master	1
21	C267 2290	Base:Fix:Plotter:2:Peen	1
22	C267 5241	Harness:Stepper Motor:Ass'y	1
23	C267 5844	Stepper Motor:DIA42:Plotter:Ass'y	1
24	C267 2010	Side Plate:Fix:Rear:Plotter:Ass'y	1
25	C231 2135	Platen Gear - 2	1
26	C267 2133	Gear:Idler:1:Platen	1
27	C231 2234	Brake Pad	1
28	C261 2273	Bracket:On Off Detector:Plotter	1
29	AW02 0141	Photointerruptor	1
30	C249 2230	Brake Shoe	1
31	A267 1820	Sheet - Photointerrupter	1

Index No.	Part No.	Description	Q'ty Per Assembly
101	0451 3006N	Tapping Screw - 3x6	
102	0353 0040N	Screw - M3x4	
103	0454 3006Q	Tapping Screw - M3x6	
104	0720 0030E	Retaining Ring - M3	
105	0720 0040E	Retaining Ring - M4	
106	1105 0488	Harness Clamp	
107	1607 2075	Ferrite Core:K1 NF-135-(N)BK0	
108	0352 0080P	Screw M2x8	
109	1106 0851	Bush:NJ-16	
110	1105 0521	Clamp - LES-1017	
111	1105 0534	Clamp	
112	1105 0328	Harness Clamp - ES-0505	
113	0453 3006N	Tapping Screw - M3x6	

13.Press Roller Section (C275)

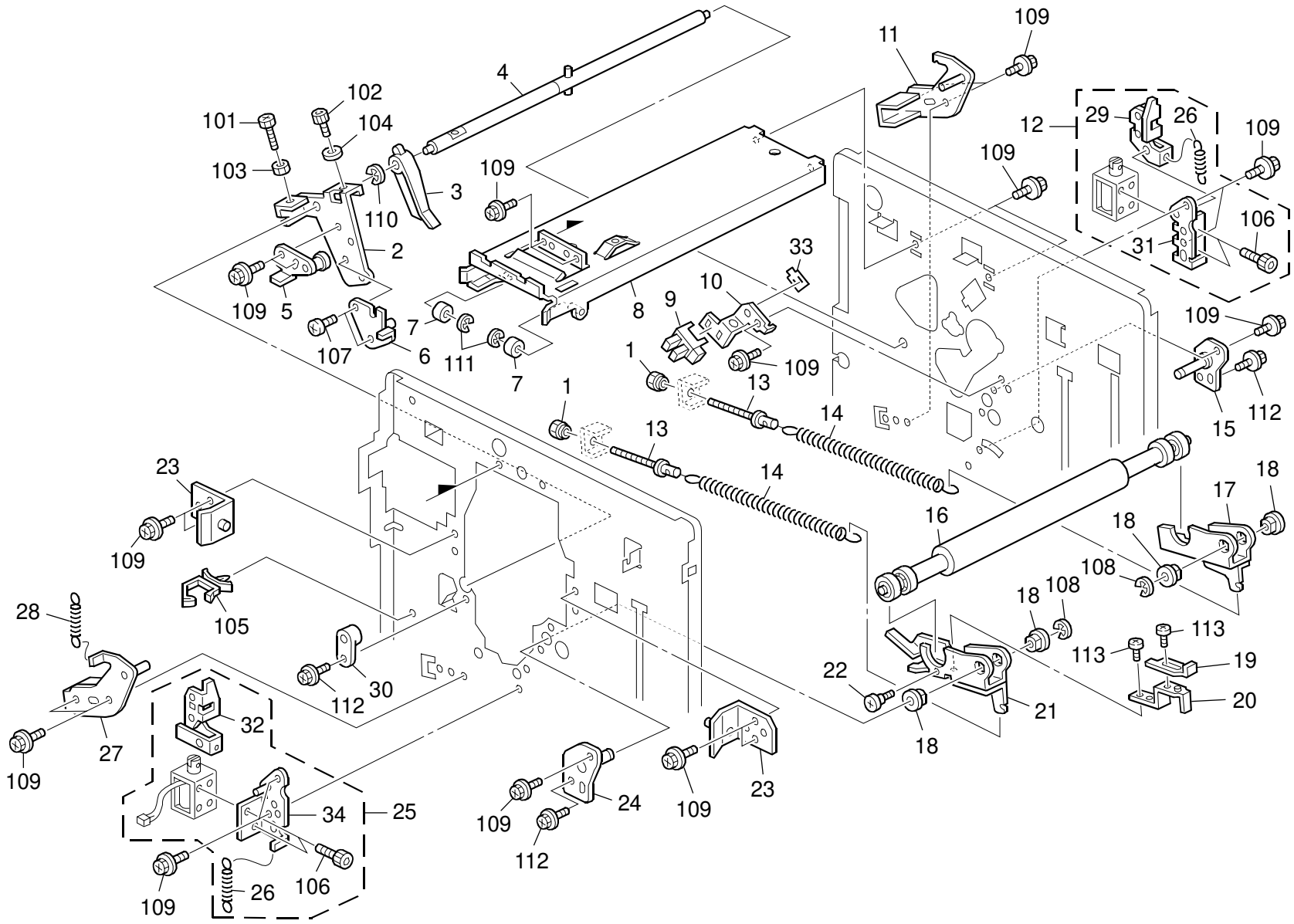

13.Press Roller Section (C275)

Index No.	Part No.	Description	Q'ty Per Assembly
1	C238 3127	Pressure Spring Nut	2
2	C261 4481	Arm:Drive:Pickoff Pawl	1
3	C252 4365	Pickoff Pawl:Exit	1
4	C267 4480	Shaft:Pickoff Pawl:Ass'y	1
5	C238 4493	Exit Pawl Drive Arm 2	1
6	C261 4485	Bracket:Roller:Pressure Release	1
7	C229 2615	Slide Rail Roller	2
8	C261 2601	Stay:Drum:Machine Or Copier:Ass'y	1
9	AW02 0141	Photointerruptor	1
10	C261 5611	Bracket:Sensor:Paper Feed Control	1
11	C261 3123	Anchor:Spring:Pressure:Right:Ass'y	1
12	C267 3134	DC Solenoid:Pressure Release:Right:Ass'y	1
13	C238 3126	Pressure Spring Screw	2
14	C252 3140	Spring:Pressure:B4	2
14	C261 3141	Spring:Pressure:A4/LG	2
15	C261 3103	Side Plate:Pressure:Right:Ass'y	1
16	**C267 3050**	**Pressure Roller:B4:Ass'y**	**1**
16	**C267 3052**	**Pressure Roller:A4/LG:Ass'y**	**1**
17	C261 3113	Arm:Pressure Roller:Right:Ass'y	1
18	C252 1080	Bushing	4
19	C261 3117	Stopper:Pressure Roller	1
20	C261 3116	Bracket:Stopper:Pressure Roller	1
21	C261 3110	Arm:Pressure Roller:Left:Ass'y	1
22	5506 6111	Stepped Screw - M4	1
23	C261 2605	Positioning Pin:Drum:Ass'y	2
24	C261 3100	Side Plate:Pressure:Left:Ass'y	1
25	C267 3130	DC Solenoid:Pressure Release:Left:Ass'y	1
26	C261 3137	Spring:Pressure Release	2
27	C261 3120	Anchor:Spring:Pressure:Left:Ass'y	1
28	C267 4349	Spring:Arm:Pickoff Pawl	1
29	C261 3165	Arm:Pressure Release:Right:Ass'y	1
30	C267 4479	Bushing	1
31	C261 3135	Bracket:Pressure Release:Right	1
32	C261 3160	Arm:Pressure Release:Left:Ass'y	1
33	A267 1820	Sheet - Photointerrupter	1

Index No.	Part No.	Description	Q'ty Per Assembly
34	C261 3131	Bracket:Pressure Release:Left	1
101	0593 0080E	Bolt - M3x8	
102	0584 0121N	Hexagonal Head Bolt:M4x12	
103	0710 0040N	Hexagonal Nut:M4	
104	0701 0030N	Washer DIA3	
105	1105 0508	Harness Clamp - LWS-0711	
106	0593 0040E	Hexagonal Set Screw:M3x4	
107	0354 0040N	Screw-M4x4	
108	0720 0080E	Retaining Ring - M8	
109	0451 4006N	Tapping Screw - 4x6	
110	0720 0060E	Retaining Ring - M6	
111	0720 0040E	Retaining Ring - M4	
112	0451 4008N	Tapping Screw:4x8	
113	0353 0060N	Bind Screw - M3x6	

14.Drum Unit 1 (C275)

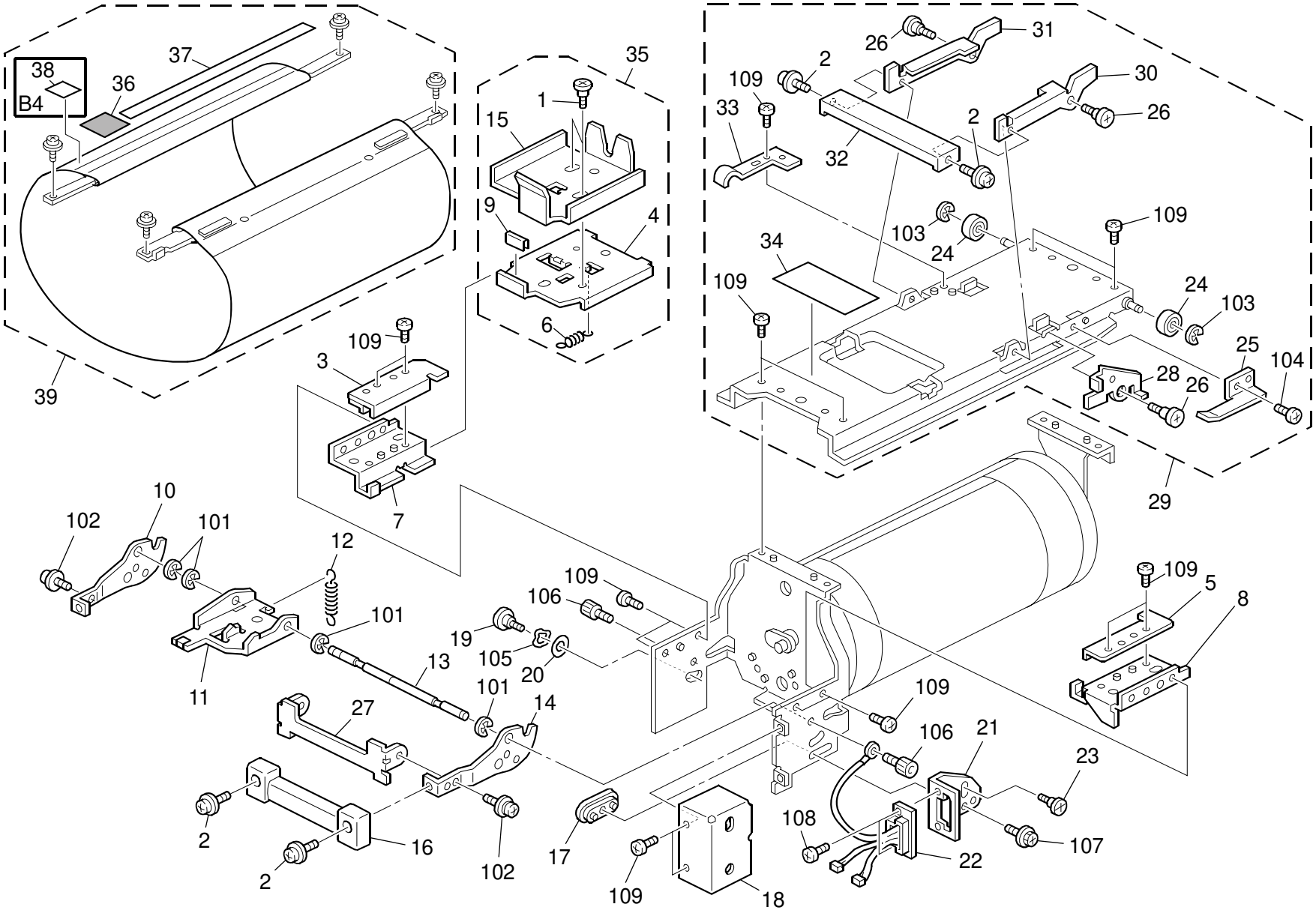

14.Drum Unit 1 (C275)

Index No.	Part No.	Description	Q'ty Per Assembly
1	C261 2552	Screw:Slider	2
2	C612 1801	Screw:M4x8	4
3	C267 2642	Guide:Slider:Left:WLD:Ass'y	1
4	C267 2641	Slider:Holder:Ink Cartridge:WLD	1
5	C261 2555	Guide:Slider:Right	1
6	C252 2559	Spring:Pressure:Ink Cartridge	1
7	C261 2553	Rail:Holder:Left	1
8	C261 2554	Rail:Holder:Right	1
9	C267 2571	Shield:Holder:Ink Cartridge	1
10	C261 2531	Arm:Grip:Right	1
11	C261 2556	Lever:Release:Holder:Ass'y	1
12	C261 2560	Spring:Lever:Release	1
13	C261 2535	Shaft:Contact Point:Arm:Drum	1
14	C261 2530	Arm:Grip:Left	1
15	C267 2640	Holder:Ink Cartridge (-76/78/80/83/93)	1
15	C267 2675	Holder:Ink Cartridge:NA:STD:Ass'y (-61)	1
15	C275 2676	Holder:Ink Cartridge:NA:RIC:Ass'y (-92)	1
16	C252 2534	Grip:Drum:Lower	1
17	C267 2574	Slider:Housing	1
18	C261 2543	Cover:Harness:Drum	1
19	C261 2533	Screw:Arm:Drum	1
20	C238 2489	Rubber Bushing Plate	1
21	C261 2538	Bracket:Housing:Drum	1
22	C267 5257	Harness:Drum:Connecting:B4:Ass'y	1
22	C267 5258	Harness:Drum:Connecting:A4:Ass'y	1
22	C267 5259	Harness:Drum:Connecting:LG:Ass'y	1
23	C238 2573	Stepped Screw	1
24	C267 3452	Roller:Rail:Drum	2
25	C267 2396	Spring Plate:Stopper	1
26	C238 2585	Screw MM6x1.7	3
27	C261 2567	Stay:Coupling:Grip	1
28	C267 2395	Bracket:Stopper:Drum	1
29	C274 2504	Frame:Upper:Drum:Ass'y	1
30	C267 2525	Stay:Grip:Drum:Right	1
31	C267 2524	Stay:Grip:Drum:Left	1

Index No.	Part No.	Description	Q'ty Per Assembly
32	C252 2526	Grip:Drum:Upper	1
33	C267 2394	Spring Plate:Grip:Drum	1
34	C252 2524	Decal:Pull Out:Drum	1
35	C267 2322	Holder:Ink Cartridge:WLD:Ass'y	1
35	C267 2323	Holder:Ink Cartridge:NA:STD:Ass'y	1
35	C275 2324	Holder:Ink Cartridge:NA:RIC:Ass'y	1
36	C267 2390	Sheet:Sensor:Drum	1
37	C252 2412	Friction Pad:Screen:Large (B4)	1
37	C252 2414	Friction Pad:Screen:LG/A4	1
38	C252 2413	Friction Pad:Screen:Small	1
39	C252 2340	Screen:B4:Ass'y	**1**
39	C252 2341	Screen:LG:Ass'y	**1**
39	C267 2342	Screen:A4:Ass'y	**1**
101	0720 0060E	Retaining Ring - M6	
102	0954 4006Z	Screw - M4x6	
103	0720 0040E	Retaining Ring - M4	
104	0353 0050Z	Philips Truss Head Screw - M3x5	
105	0807 5049	Wave Washer - 8 mm	
106	0594 0060Z	Hexagon Socket Bolt - M4x6	
107	0450 4006N	Tapping Screw:4x6	
108	0353 0080Z	Philips Trass Head Screw - M3x8	
109	0354 0040Z	Screw - M4x4	

15.Drum Unit 2 (C275)

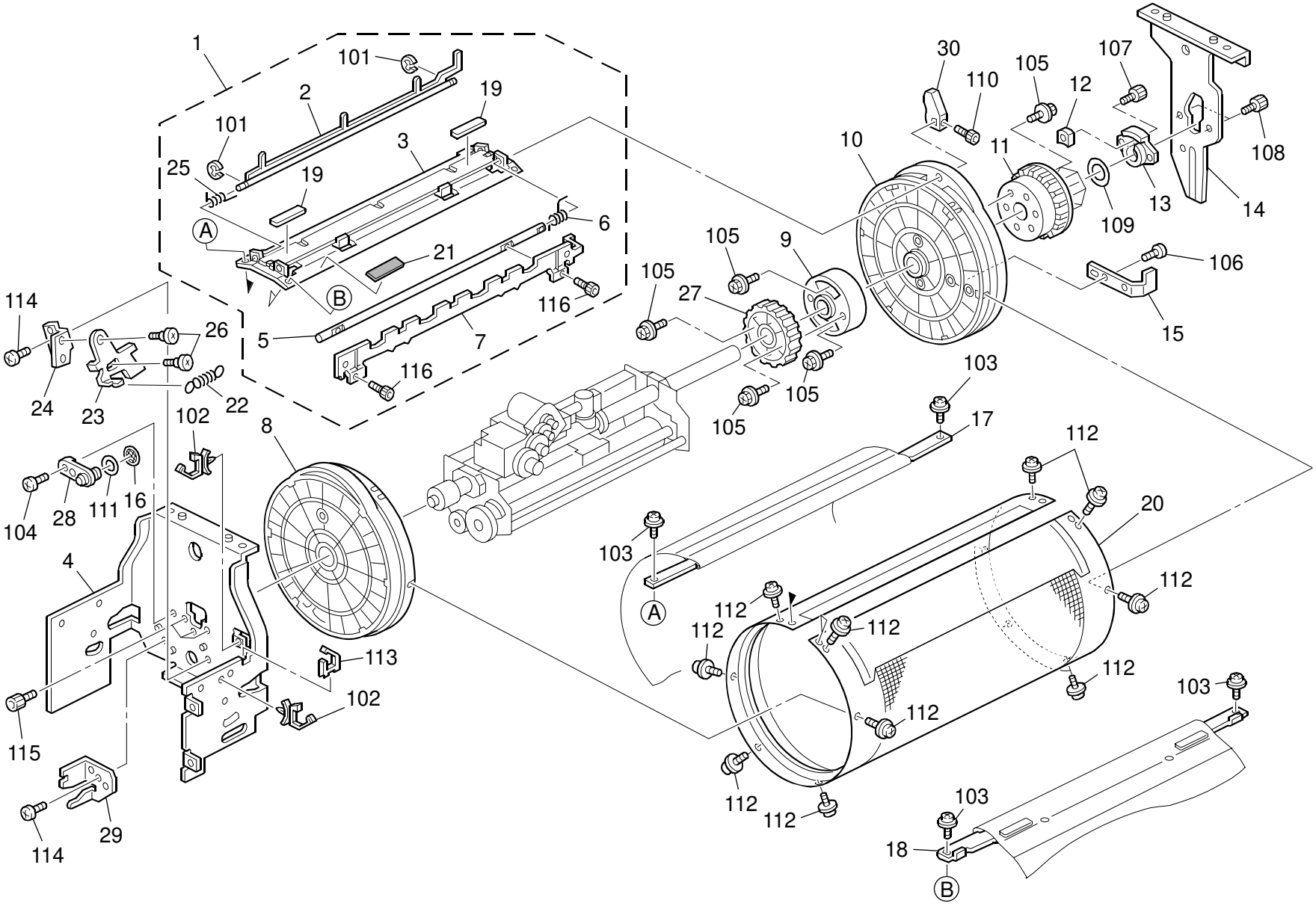

15.Drum Unit 2 (C275)

Index No.	Part No.	Description	Q'ty Per Assembly
1	C261 2401	Clamp:Ass'y	1
2	C231 2417	Master Exit Pawls	1
3	C261 2402	Base:Clamp:Drum:Ass'y	1
4	C261 2520	Side Plate:Drum:Left	1
5	C261 2406	Shaft:Clamp:Drum	1
6	C238 2410	Clamper Rear Spring	1
7	C261 2405	Plate:Clamp	1
8	C267 2360	Flange:Drum:B4/LG:Left:Ass'y	1
8	C267 2364	Flange:Drum:A4:Left:Ass'y	1
9	C252 2370	Spacer:Drum Shaft:Right	1
10	C267 2362	Flange:Drum:B4/LG:Right:Ass'y	1
10	C267 2366	Flange:Drum:A4:Right:Ass'y	1
11	C238 2368	Drum Drive Gear	1
12	C252 2396	Wedge:Plate:Thrust	1
13	C252 2395	Plate:Thrust:Drum	1
14	C261 2521	Side Plate:Drum:Right	1
15	C261 2368	Shielding Plate:Drum	1
16	C267 2424	Filter:Pump:Ink	1
17	C261 2388	Stay:Screen:Front:B4	1
17	C261 2390	Stay:Screen:Front:A4/LG	1
18	C261 2389	Stay:Screen:Rear:B4	1
18	C261 2391	Stay:Screen:Rear:A4/LG	1
19	C267 2416	Friction Pad:Small:Magnetic	2
20	C252 2590	Metal Screen - B4	1
20	C252 2593	Dram Metal Screen:Drum:LG:Ass'y	1
20	C267 2586	Dram Metal Screen:Drum:A4:Ass'y	1
21	C238 2413	Sheet:Sensor:Trailing Edge:Screen	1
22	C238 2572	Stopper Spring	1
23	C267 2572	Stopper:Turn	1
24	C267 2570	Bracket:Stopper:Turn	1
25	C252 2410	Torsion Spring:Pawl:Master Ejection:Master	1
26	C238 2585	Screw MM6x1.7	2
27	C217 4581	Ink Roller Drive Gear	1
28	C231 2565	Ink Cartridge Joint	1
29	C261 2558	Base:Lever:Release	1

Index No.	Part No.	Description	Q'ty Per Assembly
30	C238 2412	Clamper Cam	1
101	0720 0020E	Retaining Ring - M2	
102	1105 0511	Harness Clamp - LWS-0306ZC	
103	0951 3008Z	Philips Screw With Flat Washer - M3	
104	0354 0060Z	Philips Truss Head Screw - M4x6	
105	0450 3008Z	Tapping Screw - M3x8	
106	0452 3006N	Binding Self-tapping Screw:3x6	
107	0593 0100Z	Bolt M3x10	
108	0594 0080Z	Bolt - M4x8	
109	0807 7114	Washer - 16x24x0.3mm	
110	0804 6091	Hexagonal Set Screw - M2x5	
111	0808 0021	Rubber Ring	
112	0951 3006Z	Philips Screw With Flat Washer - M3	
113	1105 0522	Edge Saddle - LES0510	
114	0354 0040Z	Screw - M4x4	
115	0593 0060Z	Hexagon Bolt - M3x6	
116	0592 0040E	Hexagonal Set Screw:M2x4	

16.Drum Unit 3 (C275)

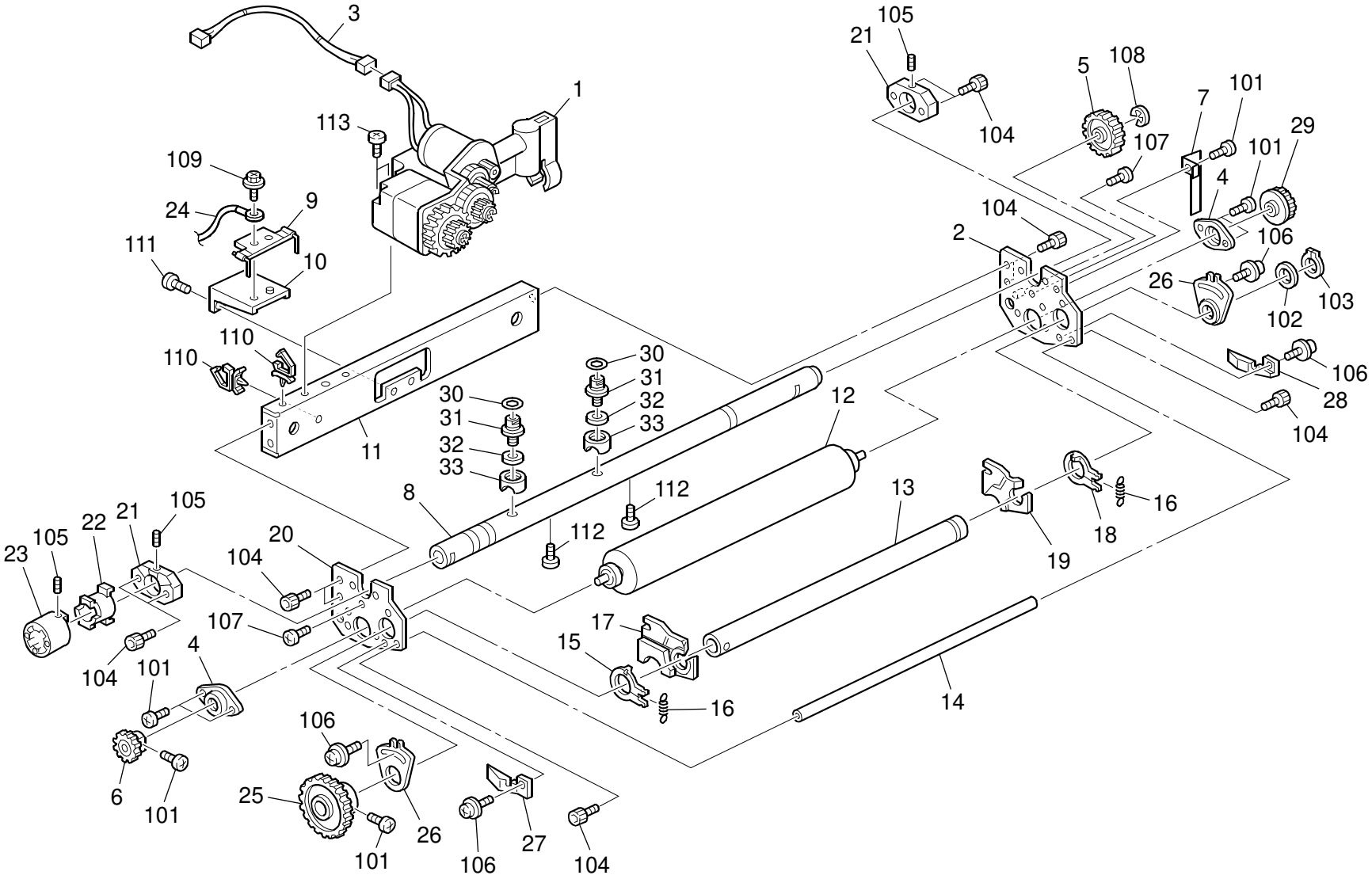

16.Drum Unit 3 (C275)

Index No.	Part No.	Description	Q'ty Per Assembly
1	C267 2422	Pump Unit:Ink:B4:Ass'y	1
1	C267 2423	Pump Unit:Ink:A4/LG:Ass'y	1
2	C252 2476	Side Plate:Roller:Ink:Right:Ass'y	1
3	C267 5251	Harness:Connecting:Pump:B4:Ass'y	1
3	C267 5254	Harness:Connecting:Pump:A4/LG:Ass'y	1
4	C267 4665	Bearing Case:Roller:Ink	2
5	C207 4672	Gear - 36Z	1
6	C238 2469	Doctor Roller Drive Gear	1
7	C267 2468	Ground Plate:Oil Supply Roller:Ink	1
8	C267 2481	Drum Shaft:B4:Ass'y	1
8	C267 2487	Drum Shaft:A4/LG:Ass'y	1
9	C261 2471	Ink Sensor:Ass'y	1
10	C252 2470	Stay:Ink Sensor	1
11	C261 2463	Stay:Main:Drum:B4	1
11	C261 2464	Stay:Main:Drum:A4/LG	1
12	C231 2450	Ink Roller - B4	1
12	C231 2456	Ink Roller - A4/LG	1
13	C252 2458	Oil Supply Roller:B4	1
13	C252 2459	Oil Supply Roller:LG/A4	1
14	C261 2465	Stay:Sub:Drum:B4	1
14	C261 2466	Stay:Sub:Drum:A4/LG	1
15	C267 2458	Ring:Front:Roller:Drum	1
16	C252 2492	Tension Spring:Ring:Roller:Drum	2
17	C218 4592	Front Bank Plate	1
18	C267 2459	Ring:Rear:Roller:Drum	1
19	C218 4594	Rear Bank Plate	1
20	C252 2475	Side Plate:Roller:Ink:Left	1
21	C252 2495	Plate:Side Plate:Roller:Ink	2
22	C252 2398	Spacer:Drum Shaft:Left	1
23	C252 2397	Collar:Drum Shaft:Left	1
24	C261 5253	Harness:Ink Sensor:Ass'y	1
25	C200 4748	Gear - 45T	1
26	C247 2461	Adjusting Plate - Doctor Roller	2
27	C267 2598	Blade:Front:Drum	1
28	C267 2599	Blade:Rear:Drum	1

Index No.	Part No.	Description	Q'ty Per Assembly
29	C237 2460	Ink Drive Gear	1
30	5316 7421	O - Ring	2
31	C252 2485	Joint:Drum Shaft	2
32	C238 2489	Rubber Bushing Plate	2
33	C238 2488	Rubber Bushing	2
101	0353 0050Z	Philips Truss Head Screw - M3x5	
102	0807 7114	Washer - 16x24x0.3mm	
103	0725 0160E	Retaining Ring C - M16	
104	0594 0080Z	Bolt - M4x8	
105	0574 0040E	Hexagon Headless Set Screw - M4x4	
106	0951 4006Z	Philips Screw With Flat Washer - M4	
107	0314 0080Z	Philips Screw - 4x8	
108	0720 0050G	Retaining Ring - M5	
109	0450 3008Z	Tapping Screw - M3x8	
110	1105 0511	Harness Clamp - LWS-0306ZC	
111	0951 3006Z	Philips Screw With Flat Washer - M3	
112	0353 0100Z	Bind Screw - M3x10	
113	0354 0060Z	Philips Truss Head Screw - M4x6	

17.Vacuume Fan Unit (C275)

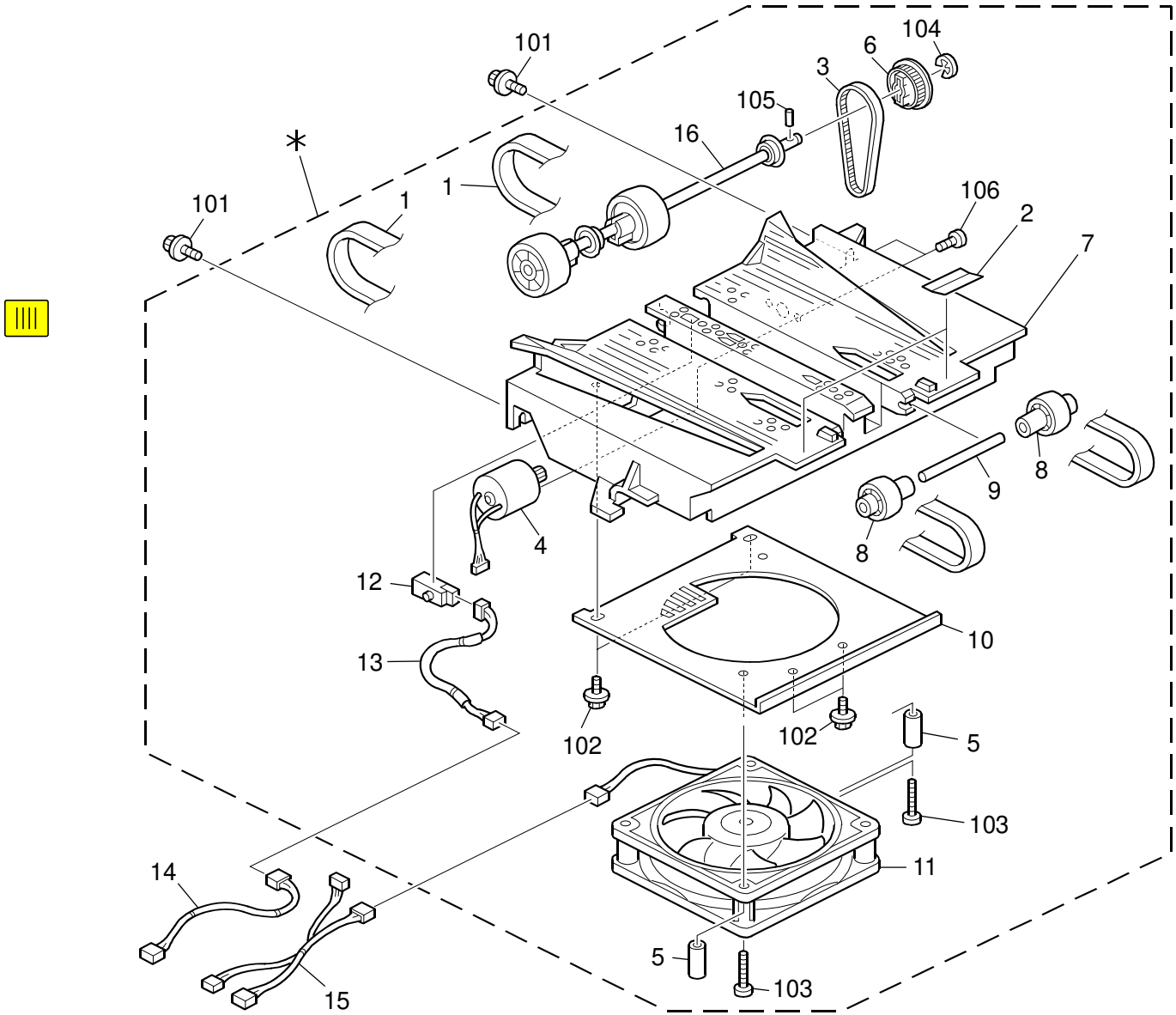

17.Vacuume Fan Unit (C275)

Index No.	Part No.	Description	Q'ty Per Assembly
*	C275 3804	Hale Unit:Ass'y	1
1	**C261 3879**	**Transport Belt:Hale Unit:17**	**2**
2	C261 3890	Guide:Hale Unit	2
3	C275 3879	Timing Belt:Drive:Hale Unit	1
4	C275 5811	DC Motor:2.5W:DIA34:Z15	1
5	C272 5887	Spacer:DC Fan Motor:Axial:MM119:24V	1
6	C275 3875	Pulley:Drive:Hale Unit	1
7	C261 3861	Duct:Hale Unit	1
8	C238 3890	Drive Roller - Drum Side	2
9	C238 3877	Driven Shaft	1
10	C261 3855	Bracket:Fan:Hale Unit:Ass'y	1
11	AX65 5800	DC Fan Motor:Axial:MM119:24V	1
12	AW01 0109	Photo Reflection Sensor:PS117ED1	1
13	C267 5260	Harness:Hale Unit:Ass'y	1
14	C275 5261	Harness:Connecting:Hale Unit:Ass'y	1
15	C275 5262	Harness:Connecting:Hale:Fan:Ass'y	1
16	C275 3876	Shaft:Drive:Hale Unit:Sub-ass'y	1

Index No.	Part No.	Description	Q'ty Per Assembly
101	0451 4008N	Tapping Screw:4x8	
102	0450 4008N	Tapping Screw - M4x8	
103	0354 0450N	Screw:M4x45	
104	0720 0060E	Retaining Ring - M6	
105	0633 0140G	Parallel Pin - 3x14	
106	0353 0060N	Bind Screw - M3x6	

18.Delibary Table (C275)

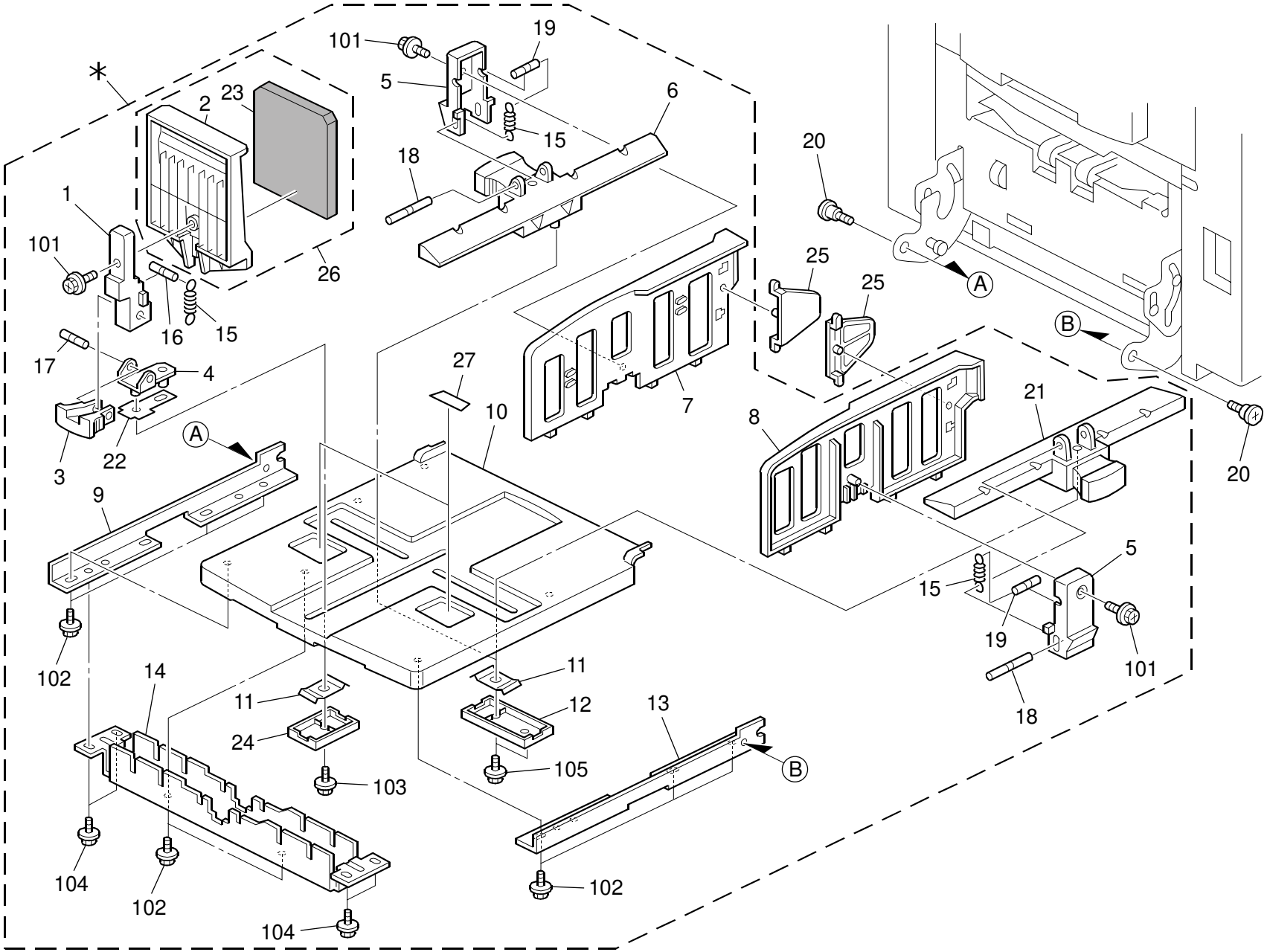

18.Delibary Table (C275)

Index No.	Part No.	Description	Q'ty Per Assembly
*	C267 4201	Paper Exit Sub-unit:Ass'y	1
*	C267 4204	Paper Exit Sub-unit:CHN:Ass'y	1
1	C267 4416	Case:End Plate:Exit	1
2	C271 4400	End Fen	1
3	C238 4406	End Plate Knob	1
4	C267 4410	Bracket:End Plate:Ass'y	1
5	C248 4407	Side Fence Case	2
6	C238 4396	Rear Lower Guide	1
6	C238 4398	Rear Lower Guide - CHN	1
7	C267 4464	Side Fence:Rear:Paper Exit Sub-unit	1
8	C267 4465	Side Fence:Front:Paper Exit Sub-unit	1
9	C261 4402	Stay:Rear:Paper Exit Sub-unit	1
10	C248 4390	Bottom Plate	1
11	C231 4420	Slider Spring Plate	3
12	C238 4456	Slider Cover	2
13	C261 4401	Stay:Front:Paper Exit Sub-unit	1
14	C261 4409	Supporting Plate:Paper Exit	1
15	C231 4413	Delivery Table Spring	3
16	C225 6113	Upper Pressure Spring Pin	1
17	C231 4419	End Plate Pin	1
18	C231 4414	Lower Side Fence Pin	2
19	C231 4415	Upper Side Fence Pin	2
20	C244 4426	Shoulder Screw	2
21	C238 4395	Front Lower Guide	1
21	C238 4397	Front Lower Guide - CHN	1
22	C231 4425	End Plate Sheet	1
23	C267 4417	Cushion:End Fence	1
24	C238 4421	Slider Cover	1
25	C267 4493	Guide:Paper:Side Fence	2
26	C271 4395	End Fence:Adhesion	1
27	C275 1342	Decal:Size Indication:A3:ABS	2

Index No.	Part No.	Description	Q'ty Per Assembly
101	0450 3008N	Tapping Screw - M3x8	
102	0450 4008N	Tapping Screw - M4x8	
103	0451 3008N	Tapping Screw - M3x8	
104	0451 4006N	Tapping Screw - 4x6	
105	0450 3012N	Tapping Screw:3x12	

19.Master Eject Unit 1 (C275)

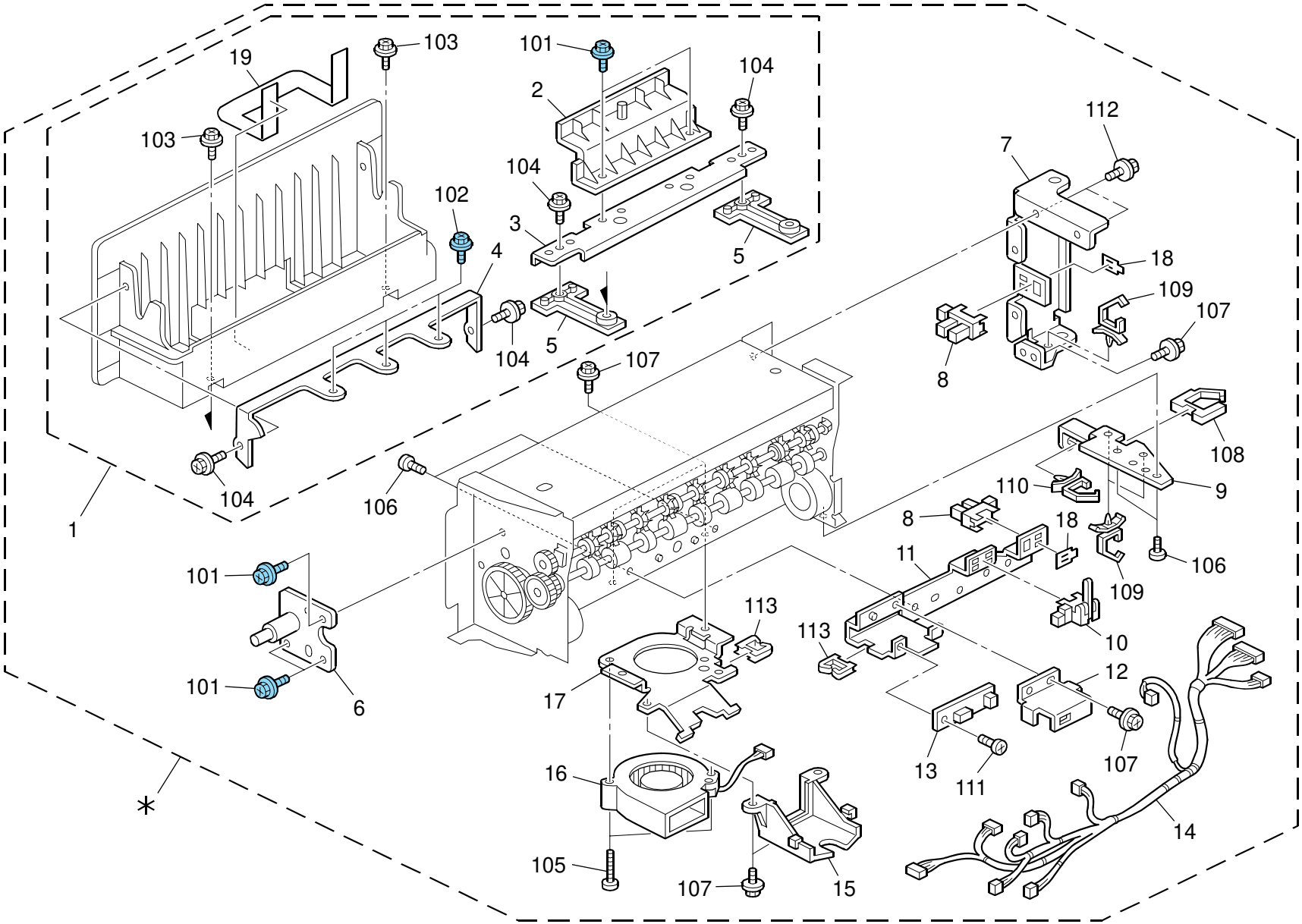

19.Master Eject Unit 1 (C275)

Index No.	Part No.	Description	Q'ty Per Assembly
*	C275 3400	Master Ejection Unit:Ass'y	1
1	C275 3510	Case:Master Ejection Unit:Ass'y	1
2	C249 3487	Box Lever	1
3	C267 3679	Bracket:Auxiliary:Master Ejection	1
4	C261 3577	Plate:Master	1
5	C267 3680	Spring Plate:Guide:Master Ejection	2
6	C267 3530	Shaft:Lock:Master Ejection Unit:Ass'y	1
7	C267 3477	Bracket:Contact Point:Turn	1
8	AW02 0141	Photointerruptor	2
9	C267 3526	Bracket:Harness:Master Ejection Unit	1
10	C261 5050	Photointerrupt:Master Ejection	1
11	C261 3467	Bracket:Sensor:Master Ejection Unit	1
12	C261 3472	Cover:Sensor:Master Ejection Unit	1
13	C261 5150	PCB:Optics Sensor	1
14	C267 5230	Harness:Master Ejection Unit:Ass'y	1
15	C261 3469	Duct:Air Knife	1
16	C261 5825	Fan:Sirocco:DC24V:B054	1
17	C261 3470	Base:Air Knife	1
18	A267 1820	Sheet - Photointerrupter	2
19	C267 3682	Sheet:Case:Master Ejection	1

Index No.	Part No.	Description	Q'ty Per Assembly
101	0454 3006Q	Tapping Screw - M3x6	
102	0454 3008Q	Tapping Screw:3x8	
103	0450 3008N	Tapping Screw 3x8	
104	0450 3006N	Tapping Screw - M3x6	
105	0354 0350N	Screw M4x35	
106	0353 0040N	Screw - M3x4	
107	0451 3006N	Tapping Screw - 3x6	
108	1105 0518	Edge Saddle - LES-1010	
109	1105 0508	Harness Clamp - LWS-0711	
110	1105 0488	Harness Clamp	
111	0353 0060N	Bind Screw - M3x6	
112	0451 3008N	Tapping Screw - M3x8	
113	1105 0328	Harness Clamp - ES-0505	

20.Master Eject Unit 2 (C275)

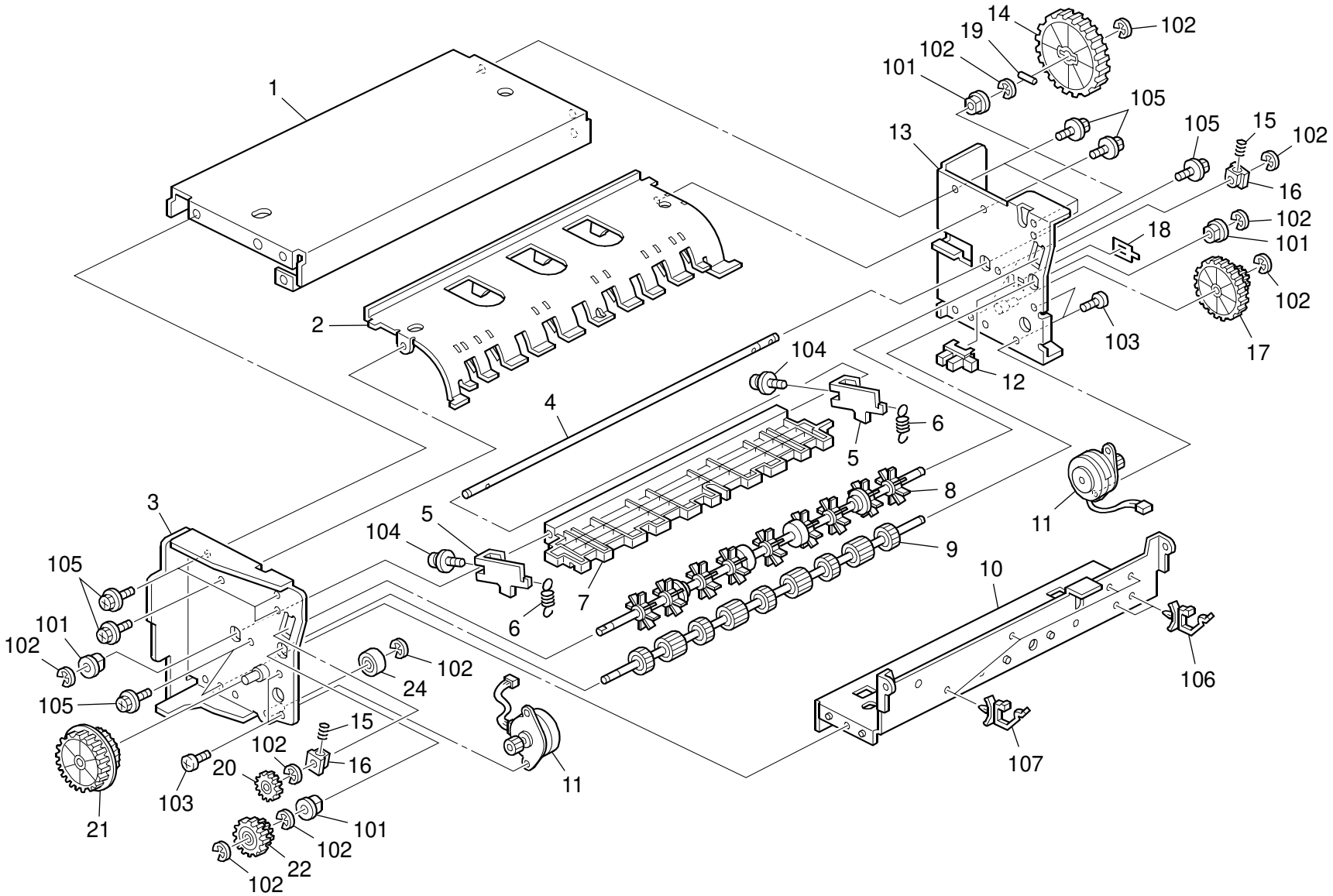

20.Master Eject Unit 2 (C275)

Index No.	Part No.	Description	Q'ty Per Assembly
1	C267 3574	Stay:Master Ejection Unit	1
2	C261 3567	Guide Plate	1
3	C267 3501	Side Plate:Front:Master Ejection:Ass'y	1
4	C261 3554	Shaft:Pressure:Master Ejection Unit	1
5	C261 3553	Arm:Pressure:Master Ejection	2
6	C252 3556	Spring:Pressure:Master Ejection:13.98N	2
7	C261 3656	Pressure Plate:Master Ejection	1
8	C267 3485	Roller:Upper:Master Ejection Unit:Ass'y	1
9	C261 3482	Roller:Lower:Master Ejection Unit:Ass'y	1
10	C261 3466	Base:Master Ejection	1
11	C259 5821	Stepper Motor:DIA42:Plotter:Ass'y	2
12	AW02 0141	Photointerruptor	1
13	C267 3521	Side Plate:Rear:Master Ejection:Ass'y	1
14	C252 3684	Gear:Pressure Plate:Master Ejection	1
15	C252 3487	Spring:Pressure:Roller:Master Ejection	2
16	C252 3486	Bushing:Pressure:MM6	2
17	C252 3525	Gear:Pressure:15/124	1
18	A267 1820	Sheet - Photointerrupter	1
19	C237 3505	Pin 3x16	1
20	C231 3494	Gear - Lower Roller	1
21	C252 3492	Gear:Roller:50/84	1
22	C231 3489	Lower Roller Gear	1
23	C267 3473	Guide:Master Ejection	1
24	C267 3452	Roller:Rail:Drum	1

Index No.	Part No.	Description	Q'ty Per Assembly
101	0805 3385	Bushing - 6mm	
102	0720 0040E	Retaining Ring - M4	
103	0353 0060N	Bind Screw - M3x6	
104	0954 3008N	Screw - M3x8	
105	0451 3006N	Tapping Screw - 3x6	
106	1105 0508	Harness Clamp - LWS-0711	
107	1105 0534	Clamp	

21.Electrical Section 1 (C275)

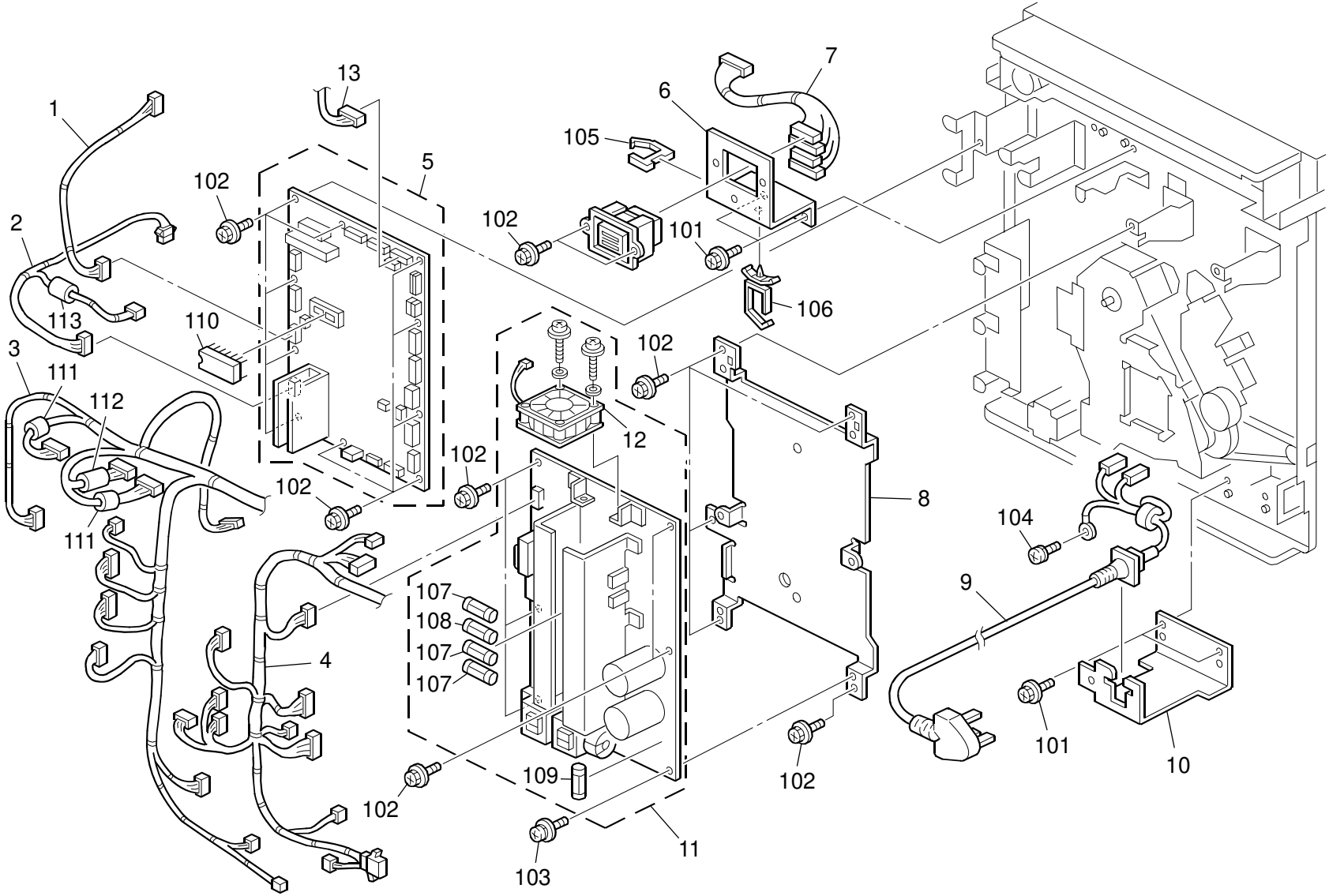

21.Electrical Section 1 (C275)

Index No.	Part No.	Description	Q'ty Per Assembly
1	C267 5280	Harness:Scanner:Motor:Ass'y	1
2	C267 5276	Harness:Paper Feed Tray:Sensor:Ass'y	1
3	C275 5200	Harness:DC Drive:Ass'y	1
4	C275 5201	Harness:Motor:Ass'y	1
5	C275 5102	PCB:MPU:Ass'y	1
6	C275 5675	Bracket:ADF:Connector	1
7	C275 5281	Harness:Connecting:ADF:Ass'y	1
8	C267 5627	Bracket:Power Supply Unit	1
9	C267 5292	Power Supply Cord:Stopper:NA:Ass'y	1
9	C267 5294	Power Supply Cord:Stopper:EU:Ass'y	1
9	C267 5299	Power Supply Cord:Stopper:CHN:Ass'y	1
10	C267 5670	Bracket:Power Supply Cord	1
11	C275 5300	DC Power Supply:Main:NA:Ass'y	1
11	C275 5310	DC Power Supply:Main:EU:Ass'y	1
12	AX64 0188	Fan Motor DC24V 1.68W	1
13	C275 5206	Harness:Ink:Ass'y	1

Index No.	Part No.	Description	Q'ty Per Assembly
101	0451 4006N	Tapping Screw - 4x6	
102	0451 3006N	Tapping Screw - 3x6	
103	0954 3006N	Screw - M3x6	
104	0954 4008N	Screw - M4x8	
105	1105 0518	Edge Saddle - LES-1010	
106	1105 0490	Harness Clamp - IWS-2218	
107	1107 0392	Fuse - 6.3A 125V	
108	1107 0393	Fuse (Glass Case) - 8A - 125V	
109	1107 1067	Fuse:ET-6.3A	
110	1407 5856	RAM:FM18L08-70-PG	
111	1607 2074	Ferrite Core:K1 NFR-08-ABK0	
112	1607 2031	Ferrite Core:K1 NF-75(N)BK2	
113	1607 2076	Ferrite Core:K1 NF-30-A(N)BK0	

22.Electrical Section 2 (C275)

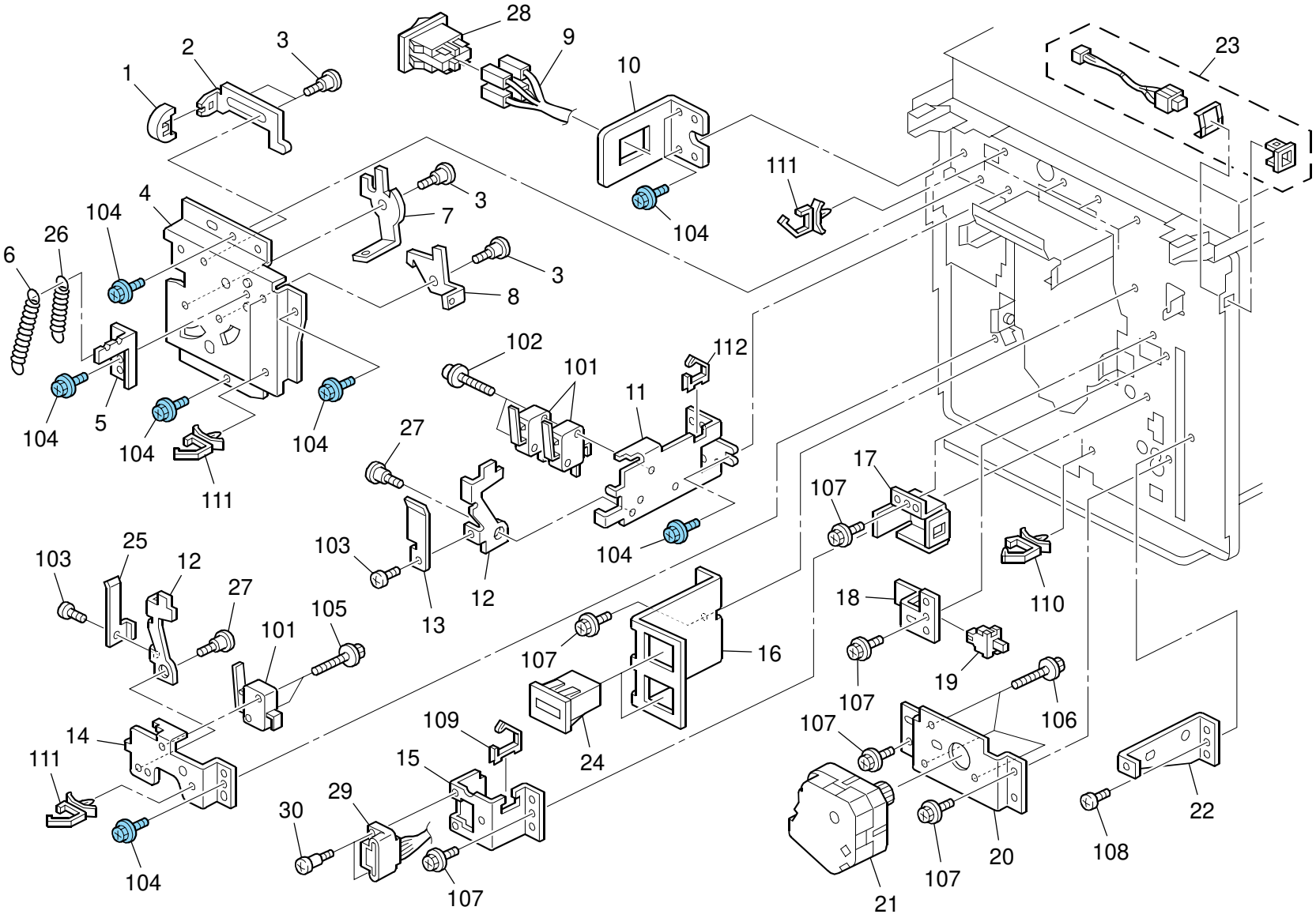

22.Electrical Section 2 (C275)

Index No.	Part No.	Description	Q'ty Per Assembly
1	C267 3733	Button:Master Ejection	1
2	C267 3732	Lever:Open And Close:Master Ejection Unit	1
3	C261 2552	Screw:Slider	4
4	C267 1060	Cover:Side Plate:Machine Or Copier:Front	1
5	C267 3736	Bracket:Spring:Master Ejection	1
6	C267 3738	Spring:Lever:Lower	1
7	C267 3731	Lever:Lower	1
8	C267 3730	Lever:Middle	1
9	C267 5202	Harness:Main Switch:Ass'y	1
10	C267 5650	Bracket:Main Switch	1
11	C275 5685	Bracket:On Off Detector:Door	1
12	C267 2172	Lever:Safety Switch	2
13	C267 5635	Spring Plate:Safety Switch	1
14	C267 3706	Bracket:On Off Detector: Master Ejection Unit	1
15	C261 2611	Bracket:Receptacle	1
16	C238 5651	Total Counter Bracket	1
17	C267 1085	Cover:On Off Detector: Machine Or Copier:Upper	1
18	C267 1074	Bracket:On Off Detector: Machine Or Copier:Plotter	1
19	G020 5626	Push Switch	1
20	C238 2785	Tray Motor Bracket	1
21	C259 5814	DC Motor:Paper Feed Tray:24V	1
22	C267 1321	Bracket:Plate:Cover:Front	1
23	C257 5856	Push Switch	1
24	AX31 0049	Total Counter:7Fig:24V	2
25	C267 2176	Spring Plate:Safety Switch	1
26	C267 3737	Spring:Lever:Middle	1
27	C261 5686	Screw:Round Point:Safety Switch	2
28	A250 5725	Rocker Switch	1
29	C267 5252	Harness:Connecting:Drum:Ass'y	1
30	C244 2633	Stepped Screw	2

Index No.	Part No.	Description	Q'ty Per Assembly
101	1204 2521	Micro Switch	
102	0951 3025N	Screw:Polished Round:M3x25	
103	0353 0060N	Bind Screw - M3x6	
104	0454 4006Q	Tapping Screw:4x6	
105	0951 3014N	Screw Polished Round M3x14	
106	0450 4025N	Tapping Screw:4x25	
107	0451 4006N	Tapping Screw - 4x6	
108	0314 0040N	Pan Head Screw - M4x4	
109	1105 0518	Edge Saddle - LES-1010	
110	1105 0534	Clamp	
111	1105 0508	Harness Clamp - LWS-0711	
112	1105 0522	Edge Saddle - LES0510	

23.Drive Section 1 (C275)

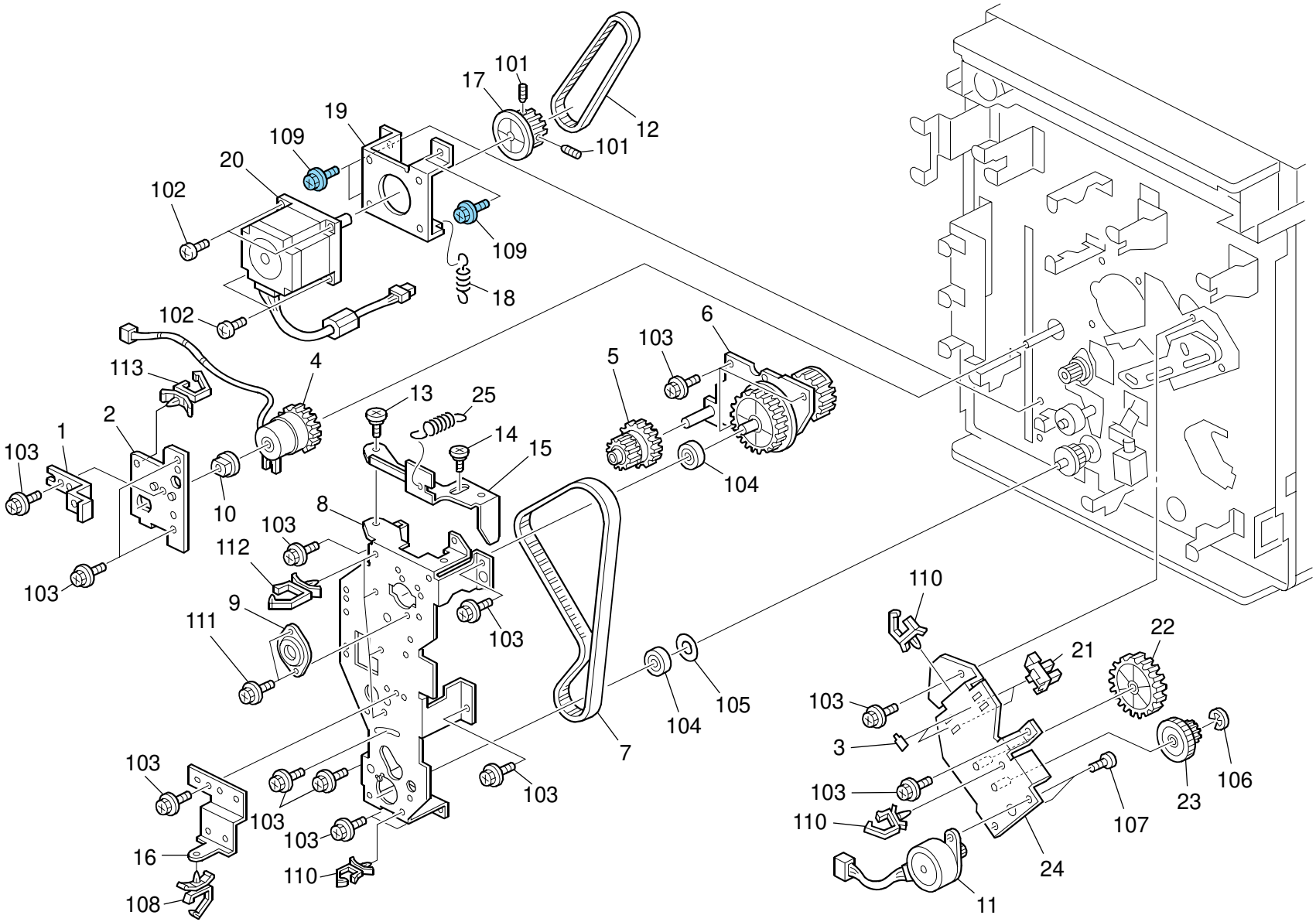

23.Drive Section 1 (C275)

Index No.	Part No.	Description	Q'ty Per Assembly
1	C267 5622	Bracket:Base:Fix	1
2	C261 2817	Bracket:Drive:Paper Feed Roller	1
3	A267 1820	Sheet - Photointerrupter	2
4	C261 5879	Magnetic Clutch:Paper Feed Roller	1
5	C252 1179	Pulley:Drive:Paper Feed	1
6	C275 1160	Gear:Drive:Drum:Ass'y	1
7	C275 1180	Timing Belt:Drive:Main	1
8	C275 1172	Side Plate:Drum Drive Sub-unit	1
9	C261 1171	Bearing Case	1
10	5053 0447	Bushing - 6mm	1
11	C259 5821	Stepper Motor:DIA42:Plotter:Ass'y	1
12	C238 2948	Timing Belt - 140-XL-050	1
13	AA14 3802	Screw:6x1.7	1
14	C244 4426	Shoulder Screw	1
15	C275 1173	Stopper:Gear:Remover/Install	1
16	C275 1177	Spacer:Power Supply Unit	1
17	C252 2888	Pulley:Stepper Motor:Feed:23Z	1
18	C267 2885	Tension Spring:Bracket:Stepper Motor	1
19	C261 2887	Bracket:Stepper Motor:Feed	1
20	C257 5817	Stepper Motor MM56x64	1
21	AW02 0141	Photointerruptor	2
22	C252 4068	Gear:Drive:Rack	1
23	C252 4069	Gear:Slow Down	1
24	C261 4064	Side Plate:Drive Sub-unit:Clamp	1
25	C275 1174	Tension Spring:Lock:Gear:Remover/Install	1

Index No.	Part No.	Description	Q'ty Per Assembly
101	0574 0080E	Hexagon Headless Set Screw - M4x8	
102	0354 0080N	Screw:M4x8	
103	0451 4006N	Tapping Screw - 4x6	
104	0740 3010	Ball Bearing - 10x26x8mm	
105	0807 7046	Washer - 10.5x20x0.2mm	
106	0720 0040E	Retaining Ring - M4	
107	0353 0060N	Bind Screw - M3x6	
108	1105 0508	Harness Clamp - LWS-0711	
109	0454 4006Q	Tapping Screw:4x6	
110	1105 0534	Clamp	
111	0451 3006N	Tapping Screw - 3x6	
112	1105 0489	Harness Clamp - LWS 1316	
113	1105 0511	Harness Clamp - LWS-0306ZC	

24.Drive Section 2 (C275)

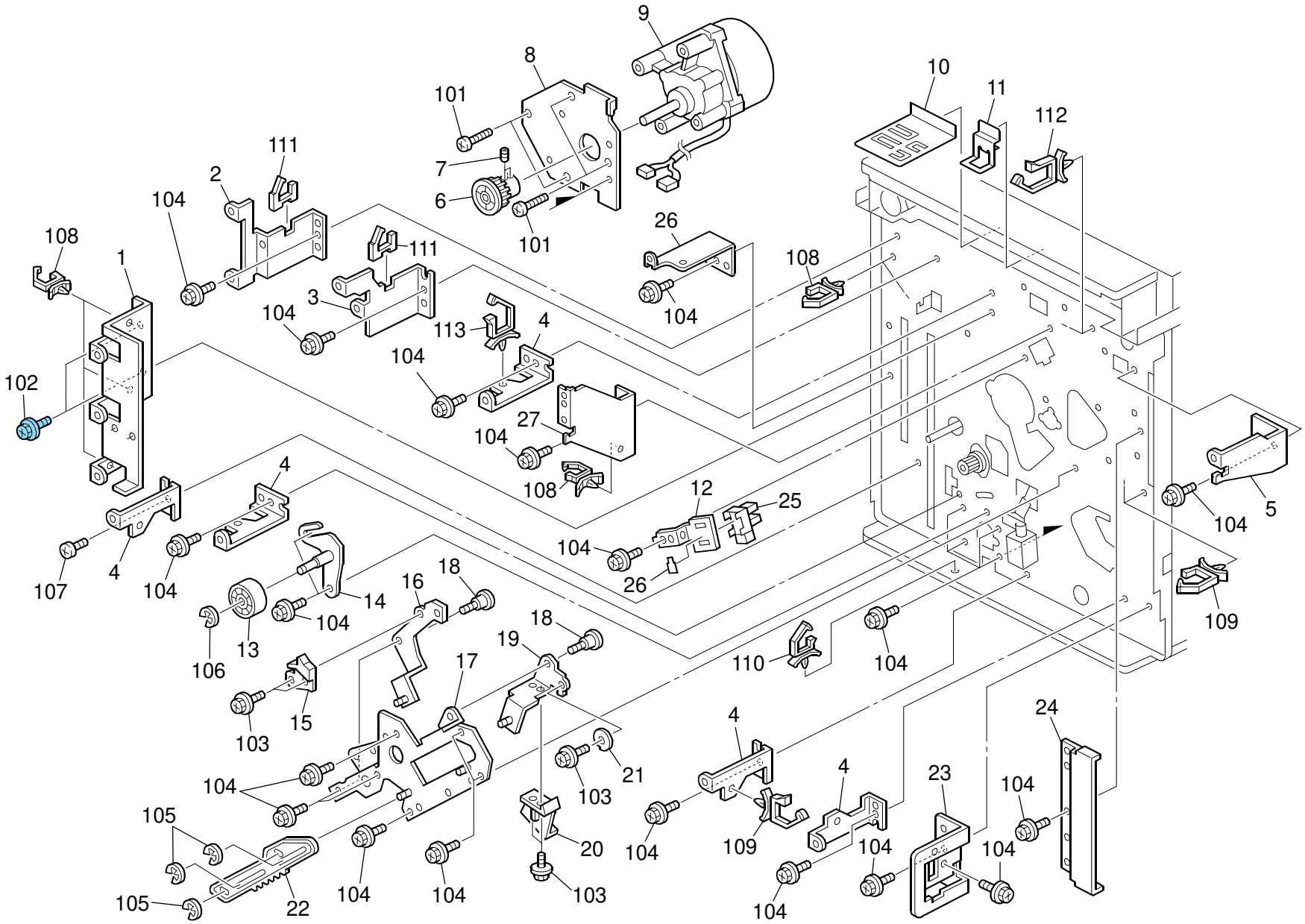

24.Drive Section 2 (C275)

Index No.	Part No.	Description	Q'ty Per Assembly
1	C267 5623	Bracket:Base:Guard	1
2	C275 5614	Bracket:UC2:Front	1
3	C275 5615	Bracket:UC2:Rear	1
4	C267 5616	Bracket:Fix:Power Supply Unit	5
5	C267 5617	Bracket:Fix:Power Supply Unit:Upper	1
6	C252 1152	Timing Pulley:Drive:Main	1
7	C252 1195	Hexagonal Set Screw:M5x8	2
8	C267 1185	Base:Brushless Motor:Main	1
9	C267 5890	Brushless Motor:Main:DC24V	1
10	C267 1802	Guide:Harness	1
11	C267 1801	Guide:Harness:Stabilizer	1
12	C261 5610	Bracket:Home Position Sensor	1
13	C252 1154	Roller:Belt Tensioner:Ass'y	1
14	C275 1156	Shaft:Belt Tensioner:Ass'y	1
15	C252 4063	Guide:Clamp:Master Feed	1
16	C261 4055	Lever:Drive:Master Feed:Peen	1
17	C261 4001	Base:Clamp:Open And Close:Ass'y	1
18	C244 4426	Shoulder Screw	2
19	C261 4059	Lever:Drive:Master Ejection:Peen	1
20	C252 4062	Guide:Positioning:Drum	1
21	C238 4070	Eject Clamp Pusher	1
22	C252 4052	Rack:Drive:Clamp	1
23	C238 5630	Tape Marker Bracket	1
24	C267 3716	Inner Cover:Open And Close	1
25	AW02 0141	Photointerruptor	1
26	A267 1820	Sheet - Photointerrupter	1
27	C275 5619	Bracket:Fix:Power Supply Unit:Upper	1
28	C275 5617	Bracket:Fix:MPU:Upper	1

Index No.	Part No.	Description	Q'ty Per Assembly
101	0315 0200N	Pan Head Screw:M5x20	
102	0454 4006Q	Tapping Screw:4x6	
103	0451 3006N	Tapping Screw - 3x6	
104	0451 4006N	Tapping Screw - 4x6	
105	0720 0040E	Retaining Ring - M4	
106	0720 0060E	Retaining Ring - M6	
107	0314 0040N	Pan Head Screw - M4x4	
108	1105 0534	Clamp	
109	1105 0508	Harness Clamp - LWS-0711	
110	1105 0516	Clamp	
111	1105 0522	Edge Saddle - LES0510	
112	1105 0490	Harness Clamp - IWS-2218	
113	1105 0489	Harness Clamp - LWS 1316	

25.Frame Section 1 (C275)

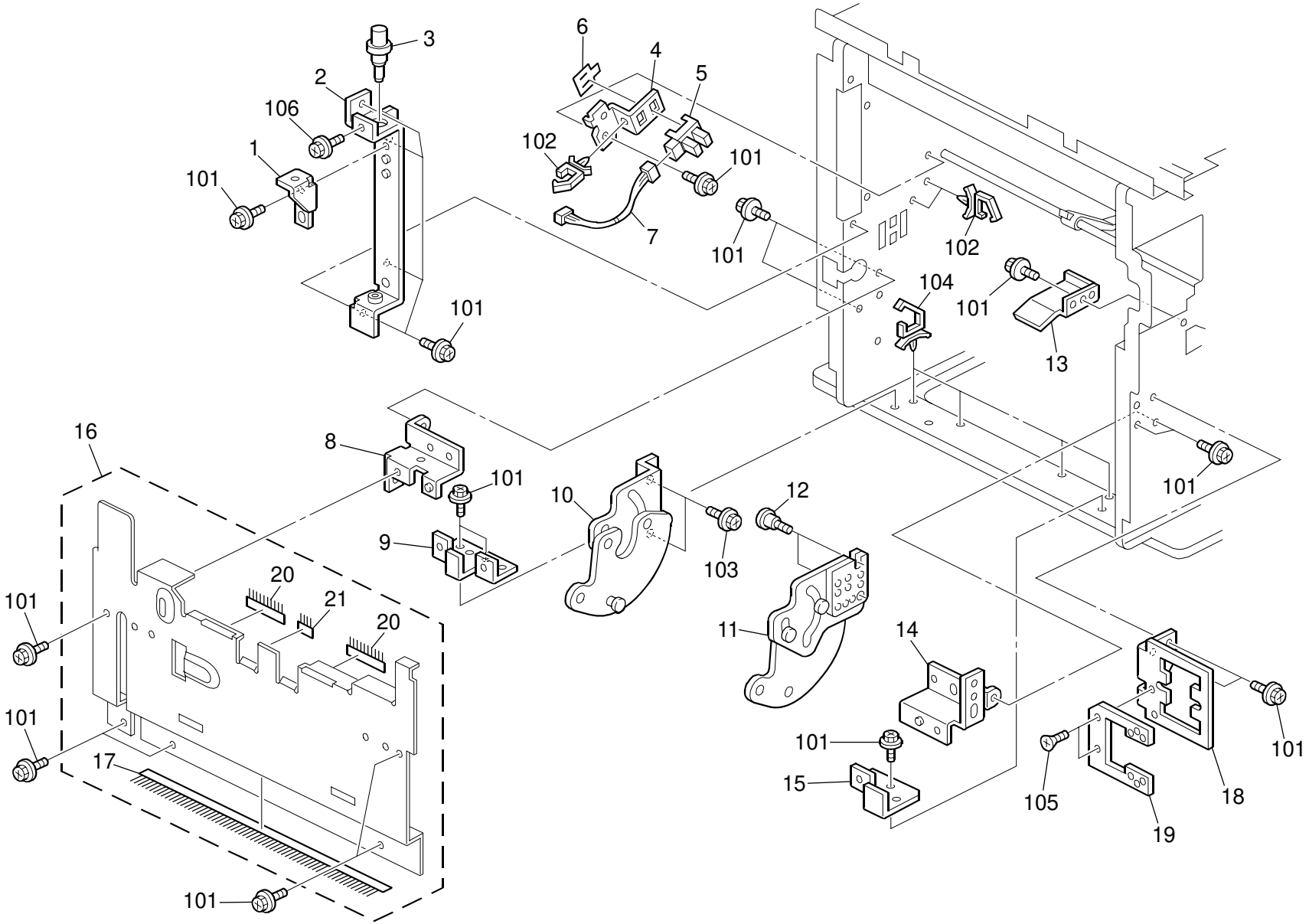

25.Frame Section 1 (C275)

Index No.	Part No.	Description	Q'ty Per Assembly
1	C267 3714	Bracket:Contact Point:Fix: Master Ejection Unit:Middle	1
2	C267 3704	Bracket:Contact Point:Fix: Master Ejection Unit	1
3	C267 3713	Shaft:Contact Point:Master Ejection:Upper	1
4	C267 5612	Bracket:Sensor:Misfeed Removal	1
5	AW02 0141	Photointerruptor	1
6	A267 1820	Sheet - Photointerrupter	1
7	C267 5231	Harness:Master Ejection:Sensor:Ass'y	1
8	C267 3882	Bracket:Drum Stay:Paper Exit Sub-unit:Rear	1
9	C267 3884	Bracket:Drum Stay:Exit:Lower Rear	1
10	C267 4441	Remover/Install Sub-unit:Exit:Rear:Peen	1
11	C267 4431	Remover/Install Sub-unit:Exit:Front:Peen	1
12	C238 4450	Hinge Screw	2
13	C267 3717	Supporter:Master Ejection Unit	1
14	C267 3881	Bracket:Drum Stay:Paper Exit Sub-unit:Front	1
15	C267 3883	Bracket:Drum Stay:Exit:Lower Front	1
16	C275 3801	Drum Stay:Paper Exit Sub-unit:Ass'y	1
17	C267 3888	Discharge Brush:Drum Stay:Exit:Lower	1
18	C267 5652	Bracket:Key Counter	1
19	C238 1339	Key Counter Plate Nut	1
20	C261 3885	Discharge Brush:Long:Paper Exit	2
21	C261 3886	Discharge Brush:Short:Paper Exit	1

Index No.	Part No.	Description	Q'ty Per Assembly
101	0451 4006N	Tapping Screw - 4x6	
102	1105 0534	Clamp	
103	0451 4008N	Tapping Screw:4x8	
104	1105 0508	Harness Clamp - LWS-0711	
105	0323 0100N	Screw M3x10	
106	0451 3006N	Tapping Screw - 3x6	

26.Frame Section 2 (C275)

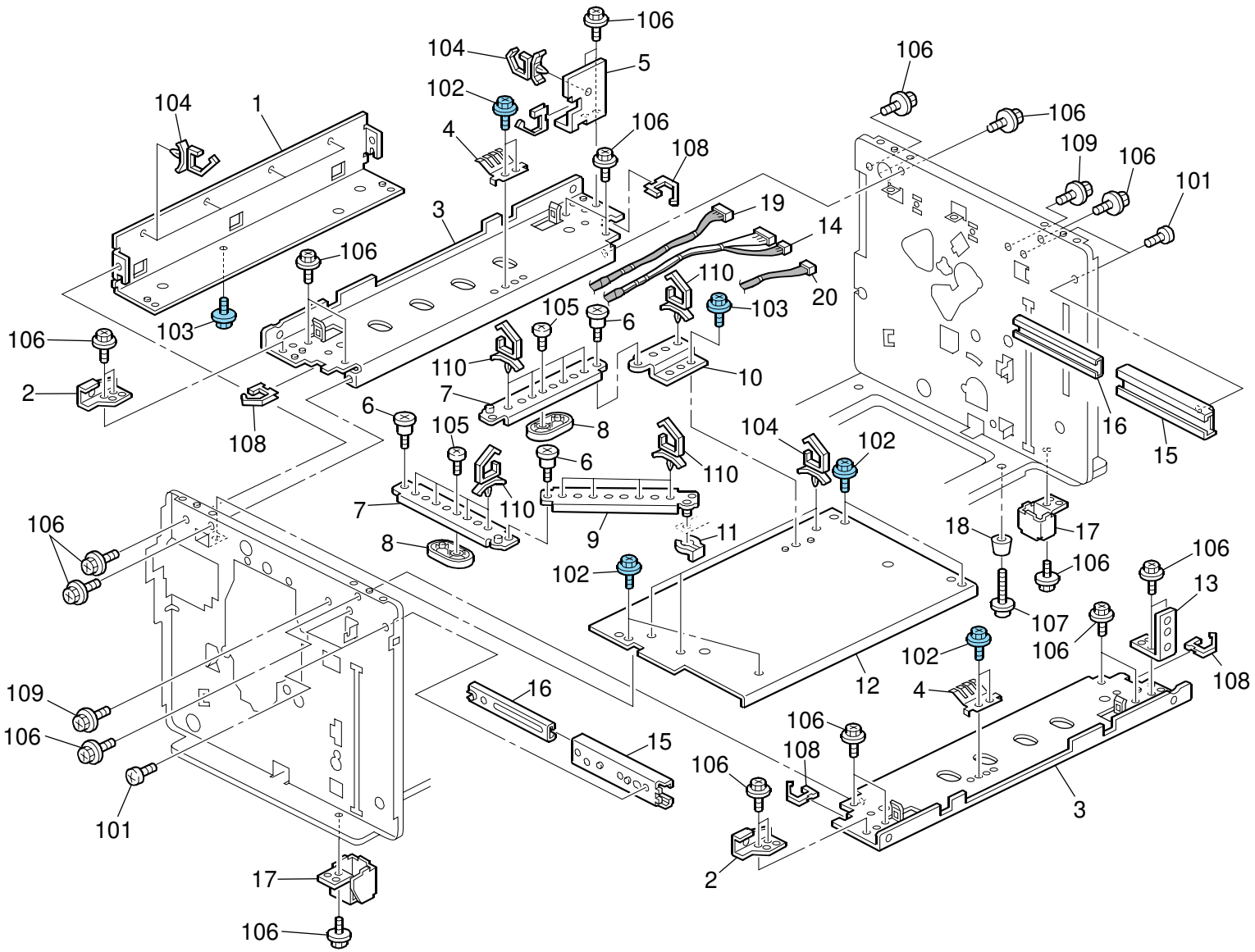

26.Frame Section 2 (C275)

Index No.	Part No.	Description	Q'ty Per Assembly
1	C267 1075	Cover:Harness:Operation Panel:Upper Left	1
2	C267 1551	Bracket:Plate:Operation Sub-unit	2
3	C267 1058	Stay:Machine Or Copier:Scanner Unit	2
4	C267 2958	Ground Plate:Cover:Stay:Paper Feed	2
5	C267 1066	Bracket:Fix:Scanner:Left	1
6	C267 1079	Screw:DIA4	3
7	C267 1077	Link:Machine Or Copier:Plotter:Front:Peen	2
8	C267 1082	Slider:Harness:Machine Or Copier:Plotter	2
9	C267 1087	Link:Machine Or Copier:Plotter:	
		Inner Back:Peen	1
10	C267 1076	Bracket:Link:Lower	1
11	5447 2681	Snap Ring	1
12	C267 1081	Cover:Harness:Operation Panel:2	1
13	C267 1065	Bracket:Fix:Scanner:Right	1
14	C267 5242	Harness:Connecting:Plotter:1:Ass'y	1
15	C267 2275	Rail:Plotter:Outer	2
16	C229 2276	Middle Plotter Rail	2
17	C267 1070	Guard:Rack:Paper Feed Tray	2
18	C238 1057	Rubber Foot	4
19	C275 5244	Harness:Connecting:Plotter:2:Ass'y	1
20	C275 5245	Harness:Connecting:Cutter Unit:Ass'y	1

Index No.	Part No.	Description	Q'ty Per Assembly
101	0314 0040N	Pan Head Screw - M4x4	
102	0454 4006Q	Tapping Screw:4x6	
103	0454 3006Q	Tapping Screw - M3x6	
104	1105 0488	Harness Clamp	
105	0452 3006N	Binding Self-tapping Screw:3x6	
106	0451 4006N	Tapping Screw - 4x6	
107	0951 4020N	Screw - M4x20	
108	1105 0521	Clamp - LES-1017	
109	0451 4008N	Tapping Screw:4x8	
110	1105 0489	Harness Clamp - LWS 1316	

27.MPU Board (C275)

BAT

SYMBOL NO.	INDEX NO.
BAT1	128

CAPACITOR

SYMBOL NO.	INDEX NO.	SYMBOL NO.	INDEX NO.	SYMBOL NO.	INDEX NO.	SYMBOL NO.	INDEX NO.	SYMBOL NO.	INDEX NO.	SYMBOL NO.	INDEX NO.
C1	299	C11	305	C21	307	C31	299	C41	204	C51	305
C2	307	C12	307	C22	307	C32	210	C42	210	C52	305
C3	305	C13	305	C23	307	C33	217	---	---	C53	305
C4	305	C14	307	C24	305	C34	307	C44	206	C54	307
C5	307	C15	307	C25	210	---	---	C45	309	C55	305
C6	305	C16	210	C26	210	---	---	C46	204	C56	307
C7	307	C17	307	C27	210	---	---	C47	305	C57	305
C8	210	C18	307	C28	307	---	---	C48	307	C58	305
C9	307	C19	219	C29	210	C39	206	C49	210	C59	305
C10	307	C20	210	C30	305	C40	210	C50	305	C60	305

CAPACITOR

SYMBOL NO.	INDEX NO.	SYMBOL NO.	INDEX NO.	SYMBOL NO.	INDEX NO.	SYMBOL NO.	INDEX NO.	SYMBOL NO.	INDEX NO.	SYMBOL NO.	INDEX NO.	SYMBOL NO.	INDEX NO.
C61	307	C71	305	C81	210	C91	212	C101	305	C111	307	C121	204
C62	307	C72	307	C82	307	C92	214	C102	305	---	---	---	---
C63	210	C73	210	C83	210	C93	307	C103	307	C113	307	---	---
C64	304	C74	307	C84	307	C94	210	C104	212	C114	206	C124	309
C65	304	C75	215	C85	215	C95	307	C105	213	C115	206	---	---
C66	210	C76	307	C86	300	C96	214	C106	307	C116	305	---	---
C67	307	C77	307	C87	307	C97	213	C107	307	C117	210	C127	309
C68	307	C78	210	C88	217	C98	210	C108	307	C118	210	---	---
C69	210	C79	307	C89	210	C99	300	C109	307	C119	305	---	---
C70	304	C80	210	C90	307	C100	307	C110	307	C120	204	---	---

27.MPU Board (C275)

CAPACITOR

SYMBOL NO.	INDEX NO.	SYMBOL NO.	INDEX NO.	SYMBOL NO.	INDEX NO.	SYMBOL NO.	INDEX NO.	SYMBOL NO.	INDEX NO.	SYMBOL NO.	INDEX NO.	SYMBOL NO.	INDEX NO.
---	---	---	---	C151	306	C161	307	C171	304	C181	305	C191	305
C132	206	---	---	C152	210	C162	307	C172	215	C182	299	C192	307
C133	206	---	---	C153	304	C163	307	C173	305	C183	299	C193	208
C134	305	---	---	C154	300	C164	304	C174	307	C184	299	C194	307
C135	210	---	---	C155	300	---	---	C175	221	C185	300	C195	307
C136	210	---	---	C156	300	C166	304	C176	307	C186	300	C196	303
C137	204	---	---	C157	305	C167	304	C177	305	C187	300	C197	308
C138	309	C148	210	C158	307	C168	304	C178	221	C188	300	C198	307
C139	204	C149	210	C159	299	C169	304	C179	299	C189	300	---	---
---	---	C150	309	C160	307	C170	307	C180	307	C190	300	---	---

CAPACITOR

SYMBOL NO.	INDEX NO.	SYMBOL NO.	INDEX NO.	SYMBOL NO.	INDEX NO.	SYMBOL NO.	INDEX NO.	SYMBOL NO.	INDEX NO.	SYMBOL NO.	INDEX NO.	SYMBOL NO.	INDEX NO.
C201	305	C211	210	C221	307	C231	226	C241	211	C251	300	C261	305
C202	307	C212	307	C222	205	C232	206	C242	206	C252	300	C262	305
---	---	C213	305	C223	206	C233	211	C243	300	C253	210	C263	210
---	---	C214	307	C224	206	C234	211	C244	300	C254	210	C264	210
---	---	C215	307	C225	211	C235	211	C245	300	C255	307	C265	305
---	---	C216	222	C226	206	C236	226	C246	300	C256	307	C266	305
C207	300	C217	307	C227	226	C237	207	C247	300	C257	210	C267	210
C208	307	C218	307	C228	204	C238	204	C248	300	C258	210	C268	300
C209	225	C219	205	C229	206	C239	211	C249	300	C259	307	C269	210
C210	307	C220	206	C230	211	---	---	C250	300	C260	307	C270	304

27.MPU Board (C275)

CAPACITOR

SYMBOL NO.	INDEX NO.	SYMBOL NO.	INDEX NO.	SYMBOL NO.	INDEX NO.	SYMBOL NO.	INDEX NO.	SYMBOL NO.	INDEX NO.	SYMBOL NO.	INDEX NO.	SYMBOL NO.	INDEX NO.
C271	304	C281	307	C291	210	C301	210	---	---	C321	220	C331	307
C272	304	C282	307	C292	210	C302	210	C312	307	C322	306	C332	306
---	---	C283	307	C293	210	C303	210	---	---	C323	307	C333	300
---	---	C284	307	C294	307	C304	307	---	---	C324	222	C334	306
C275	307	C285	307	---	---	C305	307	C315	300	---	---	C335	307
---	---	C286	307	C296	307	C306	307	C316	300	C326	306	C336	306
C277	307	C287	307	C297	210	C307	307	C317	299	C327	307	C337	222
C278	307	C288	210	C298	210	C308	307	C318	227	C328	222	C338	300
C279	305	C289	210	C299	210	C309	307	C319	300	C329	220	C339	227
C280	307	C290	210	C300	307	C310	307	C320	300	C330	222	C340	307

CAPACITOR

SYMBOL NO.	INDEX NO.	SYMBOL NO.	INDEX NO.	SYMBOL NO.	INDEX NO.	SYMBOL NO.	INDEX NO.	SYMBOL NO.	INDEX NO.	SYMBOL NO.	INDEX NO.	SYMBOL NO.	INDEX NO.
---	---	C351	307	---	---	C371	307	C381	299	C391	210	C401	210
C342	227	C352	306	---	---	C372	307	C382	307	C392	210	C402	210
C343	222	C353	306	C363	305	C373	307	C383	210	C393	210	C403	300
C344	220	C354	307	C364	307	C374	307	C384	307	C394	307	C404	307
---	---	C355	222	C365	305	C375	210	C385	210	C395	307	---	---
C346	222	---	---	C366	307	C376	210	C386	210	C396	307	C406	210
C347	307	C357	306	C367	216	C377	224	C387	211	C397	307	C407	307
C348	299	C358	227	C368	216	C378	217	C388	300	C398	209	C408	307
C349	220	C359	307	C369	210	C379	223	C389	300	C399	307	C409	307
C350	222	C360	222	C370	210	C380	223	C390	300	C400	307	C410	307

27.MPU Board (C275)

CAPACITOR

SYMBOL NO.	INDEX NO.	SYMBOL NO.	INDEX NO.	SYMBOL NO.	INDEX NO.	SYMBOL NO.	INDEX NO.	SYMBOL NO.	INDEX NO.	SYMBOL NO.	INDEX NO.	SYMBOL NO.	INDEX NO.
C411	210	C421	214	---	---	C441	299	C451	210	C461	307	C471	309
C412	210	C422	214	C432	210	C442	210	C452	210	C462	307	C472	309
C413	210	C423	214	C433	307	C443	210	C453	307	C463	305	C473	309
C414	307	C424	217	C434	307	C444	299	C454	307	C464	307	C474	305
C415	210	---	---	C435	301	C445	307	C455	307	C465	307	C475	299
C416	210	C426	307	C436	301	C446	210	C456	307	C466	307	C476	300
C417	307	C427	210	C437	307	C447	306	C457	210	C467	307	C477	300
C418	300	C428	307	C438	210	C448	210	C458	210	C468	307	C478	210
C419	307	C429	305	C439	210	C449	307	C459	307	C469	305	C479	210
C420	210	C430	217	C440	210	C450	307	C460	307	C470	309	C480	307

CAPACITOR

SYMBOL NO.	INDEX NO.	SYMBOL NO.	INDEX NO.	SYMBOL NO.	INDEX NO.	SYMBOL NO.	INDEX NO.	SYMBOL NO.	INDEX NO.	SYMBOL NO.	INDEX NO.	SYMBOL NO.	INDEX NO.
C481	307	C491	307	C501	302	C511	305	C521	307	---	---	---	---
C482	300	C492	307	C502	307	C512	305	C522	307	---	---	---	---
C483	210	C493	210	C503	305	C513	307	C523	305	---	---	---	---
C484	210	C494	307	C504	307	C514	307	C524	309	C534	218	---	---
C485	307	C495	210	C505	210	C515	305	C525	307	---	---	---	---
C486	307	C496	301	C506	300	C516	305	C526	306	---	---	---	---
C487	307	C497	307	C507	304	C517	305	C527	305	---	---	---	---
C488	305	C498	307	C508	304	C518	307	C528	309	---	---	---	---
C489	300	C499	210	C509	307	C519	305	C529	210	---	---	---	---
C490	300	C500	210	C510	307	C520	305	C530	305	---	---	C550	307

27.MPU Board (C275)

CAPACITOR

SYMBOL NO.	INDEX NO.
C551	305
C552	307
C553	305

CONNECTOR

SYMBOL NO.	INDEX NO.
CN101	119
CN102	118
CN103	122
CN104	108
CN105	110
CN106	121
CN107	117
CN108	125
CN109	123
CN110	116

SYMBOL NO.	INDEX NO.
CN111	114
CN112	119
CN113	120
CN114	109
CN115	115
CN116	103
CN117	105
CN118	113
CN119	106
CN120	124

SYMBOL NO.	INDEX NO.
CN121	111
CN122	112
CN123	104
---	---
CN125	107
CN126	120

DIODE

SYMBOL NO.	INDEX NO.
D1	141
D2	138
D3	142
D4	142
D5	137
D6	139
D7	139
D8	140
D9	140
D10	140

SYMBOL NO.	INDEX NO.
D11	140
D12	139
D13	139
D14	139
D15	139

FIL

SYMBOL NO.	INDEX NO.
FIL1	233
FIL2	229
FIL3	229
FIL4	238
FIL5	229
FIL6	233
FIL7	233
FIL8	233
FIL9	230
FIL10	231

FIL

SYMBOL NO.	INDEX NO.
FIL11	231
FIL12	230
FIL13	229
FIL14	229
FIL15	232
FIL16	232
FIL17	235
FIL18	234
FIL19	234
FIL20	236

SYMBOL NO.	INDEX NO.
FIL21	229
FIL22	229
FIL23	236
FIL24	236
FIL25	236
FIL26	236
FIL27	229
FIL28	238

FUSE

SYMBOL NO.	INDEX NO.
FU1	126

IC

SYMBOL NO.	INDEX NO.
IC1	173
IC2	162
IC3	157
IC4	151
IC5	168
IC6	311
IC7	151
IC8	154
IC9	161
IC10	311

SYMBOL NO.	INDEX NO.
IC11	177
IC12	310
IC13	169
IC14	310
IC15	152
IC16	147
IC17	147
IC18	163
IC19	149
IC20	173

SYMBOL NO.	INDEX NO.
IC21	170
IC22	171
IC23	150
IC24	154
IC25	172
IC26	158
IC27	176
IC28	173
IC29	173
IC30	169

SYMBOL NO.	INDEX NO.
IC31	3
IC32	167
IC33	168
IC34	163
IC35	173
IC36	166
IC37	169
IC38	165
IC39	156
IC40	165

27.MPU Board (C275)

IC

SYMBOL NO.	INDEX NO.
IC41	2
IC42	164
IC43	164
IC44	164
IC45	164
IC46	184
IC47	169
IC48	169
IC49	179
IC50	179

SYMBOL NO.	INDEX NO.
IC51	153
IC52	171
IC53	169
IC54	159
IC55	169
IC56	175
IC57	169
IC58	147
IC59	186
IC60	1

SYMBOL NO.	INDEX NO.
IC61	185
IC62	312
IC63	182
IC64	146
IC65	146
IC66	146
IC67	146
IC68	174
IC69	181
IC70	155

SYMBOL NO.	INDEX NO.
IC71	173
IC72	168
IC73	169
IC74	148
IC75	188
IC76	187
IC77	173
IC78	173
IC79	157
IC80	167

SYMBOL NO.	INDEX NO.
IC81	165
IC82	180
---	---
---	---
---	---
---	---
---	---
---	---
---	---
IC90	160

SYMBOL NO.	INDEX NO.
IC91	160

L

SYMBOL NO.	INDEX NO.
L1	237
L2	237

LED

SYMBOL NO.	INDEX NO.
LED1	144
LED2	144
LED3	143
LED4	144
LED5	145

OSC

SYMBOL NO.	INDEX NO.
OSC1	192
OSC2	194
OSC3	193

Q

SYMBOL NO.	INDEX NO.
Q1	132
Q2	132
Q3	132
Q4	132
Q5	134
Q6	136
Q7	134
Q8	136
Q9	132
Q10	134

SYMBOL NO.	INDEX NO.
Q11	136
Q12	130
Q13	132
Q14	131
Q15	130
Q16	131
Q17	130
Q18	131
Q19	132
Q20	132

SYMBOL NO.	INDEX NO.
Q21	132
Q22	129
Q23	135
Q24	135
Q25	132
Q26	129
Q27	133
Q28	133
Q29	132
Q30	132

SYMBOL NO.	INDEX NO.
Q31	132
Q32	132
Q33	132
Q34	131
Q35	131

RESISTOR

SYMBOL NO.	INDEX NO.
R1	261
R2	271
R3	271
R4	248
R5	248
R6	248
R7	248
R8	248
R9	248
R10	249

SYMBOL NO.	INDEX NO.
R11	248
R12	271
R13	251
R14	248
R15	248
R16	248
R17	262
R18	262
R19	248
R20	265

27.MPU Board (C275)

RESISTOR

SYMBOL NO.	INDEX NO.	SYMBOL NO.	INDEX NO.	SYMBOL NO.	INDEX NO.	SYMBOL NO.	INDEX NO.	SYMBOL NO.	INDEX NO.	SYMBOL NO.	INDEX NO.	SYMBOL NO.	INDEX NO.
R21	244	R31	274	R41	279	R51	261	R61	261	R71	271	R81	271
R22	244	R32	248	R42	275	R52	248	R62	271	R72	248	R82	261
R23	244	R33	248	R43	243	R53	248	R63	261	R73	248	R83	248
R24	244	R34	248	R44	248	R54	248	R64	261	R74	247	R84	248
R25	244	R35	243	R45	261	R55	248	R65	248	R75	248	R85	271
R26	244	R36	243	R46	261	R56	248	R66	248	R76	274	R86	297
R27	244	R37	248	R47	248	R57	243	R67	248	R77	271	R87	274
R28	244	R38	247	R48	261	R58	243	R68	271	R78	247	R88	296
R29	248	R39	275	R49	248	R59	243	R69	272	R79	272	R89	273
R30	259	R40	281	R50	248	R60	261	R70	272	R80	271	R90	248

RESISTOR

SYMBOL NO.	INDEX NO.	SYMBOL NO.	INDEX NO.	SYMBOL NO.	INDEX NO.	SYMBOL NO.	INDEX NO.	SYMBOL NO.	INDEX NO.	SYMBOL NO.	INDEX NO.	SYMBOL NO.	INDEX NO.
R91	261	R101	272	R111	243	R121	239	R131	257	R141	261	R151	267
R92	261	R102	272	R112	257	R122	242	R132	243	R142	248	R152	253
R93	261	R103	272	R113	248	R123	247	R133	248	R143	248	R153	267
R94	261	R104	272	R114	239	R124	253	R134	248	R144	248	R154	261
R95	247	R105	248	R115	242	R125	248	R135	267	R145	247	R155	261
R96	295	R106	246	R116	261	R126	257	R136	248	R146	252	R156	261
R97	272	R107	243	R117	247	R127	239	R137	248	R147	254	R157	261
R98	297	R108	243	R118	253	R128	242	R138	248	R148	247	R158	261
R99	272	R109	243	R119	248	R129	247	R139	248	R149	280	R159	248
R100	271	R110	243	R120	257	R130	253	R140	248	R150	261	R160	261

27.MPU Board (C275)

RESISTOR

SYMBOL NO.	INDEX NO.	SYMBOL NO.	INDEX NO.	SYMBOL NO.	INDEX NO.	SYMBOL NO.	INDEX NO.	SYMBOL NO.	INDEX NO.	SYMBOL NO.	INDEX NO.	SYMBOL NO.	INDEX NO.
R161	261	R171	248	R181	248	R191	272	R201	240	R211	248	R221	261
R162	261	R172	248	R182	248	R192	272	R202	248	R212	262	R222	261
R163	261	R173	248	R183	248	R193	247	R203	248	R213	248	R223	294
R164	261	R174	247	R184	250	R194	248	R204	257	R214	247	R224	276
R165	248	R175	239	R185	269	R195	248	R205	243	R215	243	R225	272
R166	248	R176	262	R186	248	R196	243	R206	248	R216	243	R226	245
R167	283	R177	248	R187	196	R197	248	R207	265	R217	243	R227	260
R168	248	R178	288	R188	196	R198	248	R208	248	R218	291	R228	260
R169	247	R179	277	R189	248	R199	195	R209	262	R219	290	R229	255
R170	248	R180	268	R190	248	R200	248	R210	248	R220	248	R230	265

RESISTOR

SYMBOL NO.	INDEX NO.	SYMBOL NO.	INDEX NO.	SYMBOL NO.	INDEX NO.	SYMBOL NO.	INDEX NO.	SYMBOL NO.	INDEX NO.	SYMBOL NO.	INDEX NO.	SYMBOL NO.	INDEX NO.
R231	248	R241	271	R251	248	R261	243	R271	247	R281	247	R291	264
R232	248	R242	270	R252	248	R262	292	R272	292	R282	243	R292	243
R233	248	R243	272	R253	248	R263	292	R273	292	R283	248	R293	243
R234	243	R244	271	R254	248	R264	292	R274	292	R284	261	R294	248
R235	248	R245	272	R255	248	R265	292	R275	292	R285	261	R295	247
R236	248	R246	271	R256	248	R266	298	R276	298	R286	261	R296	248
R237	261	R247	262	R257	248	R267	298	R277	298	R287	271	R297	258
R238	287	R248	263	R258	248	R268	278	R278	278	R288	248	R298	258
R239	271	R249	248	R259	248	R269	278	R279	282	R289	248	R299	271
R240	271	R250	248	R260	243	R270	247	R280	247	R290	271	R300	247

27.MPU Board (C275)

RESISTOR

SYMBOL NO.	INDEX NO.
R301	248
R302	228
R303	228
R304	247
R305	248
R306	248
R307	271
R308	248
R309	266
R310	248

SYMBOL NO.	INDEX NO.
R311	257
R312	243
R313	285
R314	256
R315	257
R316	243
R317	286
R318	246
R319	253
R320	247

SYMBOL NO.	INDEX NO.
R321	284
R322	289
R323	275
R324	248
R325	247
R326	293
R327	241
R328	241
R329	243
R330	241

SYMBOL NO.	INDEX NO.
R331	241
R332	243

REG

SYMBOL NO.	INDEX NO.
REG1	191
REG2	183
REG3	190
REG4	189
REG5	178

RN

SYMBOL NO.	INDEX NO.
RN1	199
RN2	199
RN3	199
RN4	199
RN5	199
RN6	199
RN7	197
RN8	199
RN9	199
RN10	200

SYMBOL NO.	INDEX NO.
RN11	200
RN12	200
RN13	200
RN14	200
RN15	200
RN16	200
RN17	200
RN18	200
RN19	199
RN20	199

RN

SYMBOL NO.	INDEX NO.
RN21	199
RN22	200
RN23	200
RN24	199
RN25	200
RN26	199
RN27	199
RN28	200
RN29	200
RN30	200

SYMBOL NO.	INDEX NO.
RN31	199
RN32	200
RN33	200
RN34	200
RN35	200
RN36	199
RN37	200
RN38	200
RN39	200
RN40	199

SYMBOL NO.	INDEX NO.
RN41	199
RN42	199
RN43	199
RN44	199
RN45	200
RN46	201
RN47	201
RN48	199
RN49	199
RN50	199

SYMBOL NO.	INDEX NO.
RN51	199
RN52	199
RN53	199
RN54	200
RN55	200
RN56	200
RN57	200
RN58	200
RN59	199
RN60	199

SYMBOL NO.	INDEX NO.
RN61	199
RN62	198
RN63	199
RN64	198
RN65	199
RN66	200
RN67	199
RN68	200
RN69	200
RN70	199

SYMBOL NO.	INDEX NO.
RN71	199
RN72	200
RN73	199
RN74	199
RN75	199
RN76	199

SW

SYMBOL NO.	INDEX NO.
SW1	127

27.MPU Board (C275)

TP

SYMBOL NO.	INDEX NO.
---	---
---	---
---	---
---	---
---	---
---	---
TP7	102
TP8	102
TP9	102
---	---

SYMBOL NO.	INDEX NO.
TP11	101
TP12	101

VR

SYMBOL NO.	INDEX NO.
VR1	203
VR2	202

27.MPU Board (C275)

Index No.	Part No.	Description	Q'ty Per Assembly
*	C275 5102	PCB:MPU:Sub-ass'y	1
1	B040 5506	IC:IMAC_K:RF5C789	1
2	B121 5502	LSI:TRIO:UPD65945GD-103-LML-A	1
3	C252 5145	IC:LC272C9BT-WA5	1

Index No.	Part No.	Description	Q'ty Per Assembly
101	1100 1475	Test Pin:White	
102	1101 0328	Test Pin:NO.4-LF	
103	1102 3822	Connector - 20P	
104	1102 4201	Connector - 2P	
105	1102 4205	Connector:292132-6	
106	1102 4684	Connector - 5566-06R-210	
107	1102 5303	3.5:Connector:ST:4P	
108	1102 5305	Connector	
109	1102 7648	Connector	
110	1102 7838	Connector - B6B	
111	1102 8633	Connector:B6P-SHF-1AA(LF)(SN)	
112	1102 8661	Connector - FCN-564P068-G/SC-4V	
113	1102 9110	Connector - 353297-6	
114	1102 9114	Connector - 353297-1	
115	1102 9115	Connector - 1-292207-4	
116	1102 9118	Connector:1-353297-9	
117	1102 9119	Connector:2-353297-0	
118	1102 9122	Connector 2-292208-6	
119	1102 9123	Connector 2-292208-8	
120	1102 9124	Connector:3-353308-0	
121	1102 9126	Connector:4-353308-0	
122	1102 9316	Connector:B6P-VH-FB-B(LF)(SN)	
123	1103 3178	Connector:FH12-50S-0.5SH(89)	
124	1103 3770	Connector:5219-03A-201	
125	1103 4777	Connector:00 6216 005 808+	
126	1109 0044	Fuse:MINISMDC200	
127	1204 2760	Dip Switch:CHS-01B	
128	1206 0124	Lithium Cell:CR2032VO4H/Z	
129	1400 0455	Transistor - 2SC2873Y	
130	1400 0620	Transistor:2SC1740S	
131	1400 0909	Transistor - DTA143EUA	
132	1400 0920	Transistor - DTC143EUA	
133	1400 1286	Transistor:RT1N430M-T111	
134	1401 1200	FET:2SJ533-E	
135	1401 1414	FET:SI3433BDV-E3	

Index No.	Part No.	Description	Q'ty Per Assembly
136	1401 1555	FET:2SK2897-01MR	
137	1402 0804	Silicon Diode - 45V - 0.3A	
138	1402 1265	Diode - RB411D	
139	1402 1336	Diode:1SS355	
140	1402 1342	Diode - 1SR154-400	
141	1402 1806	Diode:KDS121/P	
142	1402 2039	Diode:RSX301LA-30	
143	1403 0978	LED:SML-310DT	
144	1403 0996	LED:SML-310VT	
145	1403 1412	LED:SML-310PT	
146	1407 1535	Driver:TD62308APG(5)	
147	1407 2187	TTLIC:SN74LS07NS	
148	1407 4973	CMOS Logic SN74CBT3384APW	
149	1407 5285	CMOS Logic - 74VHCT32 TSSOP	
150	1407 5454	IC - SN74LV86APW	
151	1407 5567	IC:SN74LVCC3245APW	
152	1104 0588	Dip Socket - 28P	
153	1407 6047	CMOS Logic:TC74VHC74FT(K)	
154	1407 6050	CMOS Logic:TC74VHC08FT(K)	
155	1407 6051	CMOS Logic:TC74VHC125FT(K)	
156	1407 6052	CMOS Logic:TC74VHC14FT(K)	
157	1407 6053	CMOS Logic:TC74VHC32FT(K)	
158	1407 6390	IC - STK672-400	
159	1407 6731	PLD:EP2C8F256C8N(0.09)	
160	1407 6803	CMOS Logic:TC7SZ07FU	
161	1407 6805	CMOS Logic:TC7SH126FU	
162	1407 6812	CMOS Logic:TC7WZ74FK	
163	1407 6826	CPU:HD64F2364VTE34V	
164	1407 6847	Motor Control IC:STK672-600B-E	
165	1407 6904	CMOS Logic:TC74LCX07FT(K)	
166	1407 6951	CMOS Logic:TC7MBL3245SFK	
167	1407 6991	CMOS Logic:TC74VHC138FT(K)	
168	1407 6993	CMOS Logic:TC74VHC157FT(K)	
169	1407 6995	CMOS Logic:TC74VHC244FT(K)	
170	1407 7002	CMOS Logic:TC74VHCT00AFT(K)	

Index No.	Part No.	Description	Q'ty Per Assembly
171	1407 7003	CMOS Logic:TC74VHCT04AFT(K)	
172	1407 7004	CMOS Logic:TC74VHCT08AFT(K)	
173	1407 7005	CMOS Logic:TC74VHCT244AFT(K)	
174	1407 7168	Motor Control IC:BD63893EFV	
175	1407 7190	Controller:RB5V871A	
176	1407 7203	Motor Control IC:STK672-640A-E	
177	1407 7314	Real Time Clock:R2043T-F	
178	1408 0182	IC - TA78L010AP	
179	1408 0346	IC-BA10358F	
180	1408 0398	Comparator - NJM2903M	
181	1408 0827	IC - TA8429H	
182	1408 1204	IC - TA8083P	
183	1408 1830	Series Regulator:AIC1085-33PMJ	
184	1408 1849	Operational Amplifier:NJM2716F	
185	1408 2088	IC:LTC3701EGN#TRPBF	
186	1408 2130	OPERATIONAL AMPLIFIER:NJM2730F	
187	1408 2141	IC:R3112N461A-F	
188	1408 2515	IC:R3112N291A-F	
189	1408 2540	Series Regulator:KIA7812API/P	
190	1408 2542	Series Regulator:KIA7818API/P	
191	1408 2883	Series Regulator:RP131H121D-F	
192	1503 0758	Crystal Oscilator:MC-306 32.768KHz 12.5PF	
193	1503 1213	Crystal Oscilator - 9.8304MHz	
194	1503 1254	Crystal Oscilator 14.7456MHz	
195	1600 1682	Resistor - 680 Ω ±5% 2W	
196	1600 1946	Resistor:33M Ω:±1%:1W	
197	1601 7877	Resistor Array 4.7K Ω ±5% 1/32W	
198	1601 7886	Resistor Array 3.3K Ω ±5% 1/32W	
199	1601 7887	Resistor Array:10K Ω:±5%:1/16W:4Number	
200	1601 7898	Resistor Array:33 Ω:±5%:1/16W:4Number	
201	1601 7943	Resistor Array:68 Ω:±5%:1/16W:4Number	
202	1601 8570	Resistor:100K Ω:±10%:1/2W	
203	1601 8574	Resistor:20KΩ:±10%:1/2W	
204	1604 4672	Capacitor:100μF:±20%:50V	
205	1604 4894	Capacitor:100μF:±20%:16V	

Index No.	Part No.	Description	Q'ty Per Assembly
206	1604 5632	Capacitor:10µF:±20%:50V	
207	1604 5697	Capacitor:330µF:±20%:50V	
208	1604 5777	Capacitor:220µF:±20%:10V	
209	1605 0744	Capacitor - EMK212F105Z	
210	1605 1137	Capacitor - 470pF ±10% 50V	
211	1605 1148	Capacitor:0.1µF:+80-20%:50V	
212	1605 1201	Capacitor - 12pF ±5% 50V	
213	1605 1202	Capacitor:15pF:±5%:50V	
214	1605 1204	Capacitor:22pF:±5%:50V	
215	1605 1206	Capacitor:47pF:±5%:50V	
216	1605 1208	Capacitor:100pF:±5%:50V	
217	1605 1221	Capacitor:0.1µF:+80-20%:16V	
218	1605 1225	Capacitor:0.1µF:±10%:50V	
219	1605 1295	Capacitor:10µF:+80-20%:10V	
220	1605 1306	Capacitor:1µF:±10%:10V	
221	1605 1307	Capacitor - 2.2µF+80-20% 11V	
222	1605 1353	Capacitor:0.1µF:±10%:25V	
223	1605 1354	Capacitor:1200pF:±5%:50V	
224	1605 1358	Capacitor:10µF:±10%:10V	
225	1605 1376	Capacitor - 0.033µF- ±10%:25V	
226	1605 1396	Capacitor:0.33µF:±10%:50V	
227	1605 1406	Capacitor:10µF:±10%:6.3V	
228	1607 0807	Filter - BK1608HS601	
229	1607 0807	Filter - BK1608HS601	
230	1607 0815	BLM41P600SPB	
231	1607 0870	Filter - BK1608HS121	
232	1607 0871	Filter BK1608HM121	
233	1607 1016	Filter Array - MZA3216R301A	
234	1607 1108	Filter:BLM21PG220SN1B	
235	1607 1567	Filter:MPZ2012S101A	
236	1607 1675	Filter BK1608LM182	
237	1607 1827	Inductor:RLF7030-2R2M5R4	
238	1607 1898	Filter:BK1608LL431	
239	1610 1203	Resistor - 100 Ω ±5% 1W	
240	1610 1220	Resistor - 120 Ω ±5% 1W	

Index No.	Part No.	Description	Q'ty Per Assembly
241	1610 1607	Chip Resistor:0.1Ω:±1%:1W:6332	
242	1610 1848	Resistor:160 Ω:±5%:1W:6332	
243	1634 0000	Resistor:0Ω:1608	
244	1650 3221	Resistor - 220Ω±5%1/8W	
245	1650 4100	Resistor:10 Ω:±5%:1/10W:1608	
246	1650 4101	Resistor:100 Ω:±5%:1/10W:1608	
247	1650 4102	Resistor:1K Ω:±5%:1/10W:1608	
248	1650 4103	Resistor:10K Ω:±5%:1/10W:1608	
249	1650 4104	Resistor:100K Ω:±5%:1/10W:1608	
250	1650 4151	Resistor:150 Ω:±5%:1/10W:1608	
251	1650 4152	Resistor:1.5K Ω:±5%:1/10W:1608	
252	1650 4163	Resistor:16K Ω:±5%:1/10W:1608	
253	1650 4201	Resistor - 200Ω±5%1/10W	
254	1650 4202	Resistor - 2KΩ±5%1/10W	
255	1650 4203	Resistor - 20KΩ ±5% 1/10W	
256	1650 4204	Resistor - 200KΩ±5%1/10W	
257	1650 4222	Resistor - 2.2KΩ±5%1/10W	
258	1650 4241	Chip Resistor:240KΩ:±5%:1/10W	
259	1650 4243	Resistor:24K Ω:±5%:1/10W:1608	
260	1650 4303	Resistor:30K Ω:±5%:1/10W:1608	
261	1650 4330	Resistor:33 Ω:±5%:1/10W:1608	
262	1650 4332	Resistor:3.3K Ω:±5%:1/10W:1608	
263	1650 4391	Resistor - 390Ω ±5% 1/10W	
264	1650 4470	Resistor - 47Ω±5%1/10W	
265	1650 4472	Resistor:4.7K Ω:±5%:1/10W:1608	
266	1650 4473	Resistor - 47K Ω±5%1/10W	
267	1650 4680	Resistor:68 Ω:±5%:1/10W:1608	
268	1650 4683	Resistor - 68K Ω ±5% 1/10W	
269	1650 4824	Resistor:820KΩ:±5%:1/10W:1608	
270	1650 5102	Resistor:1K Ω:±5%:1/16W:1005	
271	1650 5103	Resistor:10K Ω:±5%:1/16W:1005	
272	1650 5330	Resistor:33 Ω:±5%:1/16W:1005	
273	1650 5470	Chip Resistor 47Ω ±5% 1/16W	
274	1650 5511	Resistor:510 Ω:±5%:1/16W:1005	
275	1654 1001	Resistor - 1KΩ±1%1/10W	

Index No.	Part No.	Description	Q'ty Per Assembly
276	1654 1152	Resistor:11.5K Ω:±1%:1/10W:1608	
277	1654 1201	Resistor:1.2K Ω:±1%:1/10W:1608	
278	1654 1401	Resistor - 1.4K Ω ±1% 1/10W 1608	
279	1654 1500	Resistor - 150Ω±1 %1/10W	
280	1654 1504	Resistor:1.5MΩ:±1%:1/16W 1608	
281	1654 1691	Chip Resistor 1.69K Ω ±1% 1/10W	
282	1654 2371	Resistor:2.37K Ω:±1%:1/10W:1608	
283	1654 2400	Resistor:240 Ω:±1%:1/10W:1608	
284	1654 2670	Resistor:267 Ω:±1%:1/10W:1608	
285	1654 2701	Resistor - 2.7KΩ±1% 1/10W	
286	1654 3000	Chip Resistor:300Ω:±1%:1/10W	
287	1654 3002	Resistor:30K Ω:±1%:1/10W:1608	
288	1654 3301	Resistor:3.3K Ω:±1%:1/10W:1608	
289	1654 3401	Chip Resistor:3.4KΩ:±1%:1/10W:1608	
290	1654 3572	Resistor:35.7K Ω:±1%:1/10W:1608	
291	1654 4222	Resistor:42.2K Ω:±1%:1/10W:1608	
292	1654 4991	Resistor:4.99K Ω:±1%:1/10W:1608	
293	1654 5901	Resistor:5.9K Ω:±1%:1/10W:1608	
294	1654 7872	Resistor:78.7K Ω:±1%:1/10W:1608	
295	1655 0000	Resistor:0 Ω:1005	
296	1655 1000	Resistor:100 Ω:±1%:1/16W:1005	
297	1655 1004	Resistor:1M Ω:±1%:1/16W:1005	
298	1655 1071	Resistor:1.07K Ω:±1%:1/16W:1005	
299	1660 0100	Capacitor:10pF:±0.5pF:50V	
300	1660 2101	Capacitor - 100pF - ±10% - 50V	
301	1660 2220	Capacitor - 22pF ±20% 35V	
302	1660 2330	Capacitor - 33pF - ±5% - 50V	
303	1660 2331	Capacitor:330pF:±5%:50V	
304	1660 2470	Capacitor:47pF:±5%:50V	
305	1660 2471	Capacitor - 470pF - ±5% - 50V	
306	1660 4102	Capacitor - 1000pF ±10% 50V	
307	1660 4103	Capacitor - 10000pF - ±10% - 50V	
308	1660 4332	Capacitor:3300pF:±10%:50V	
309	1660 8104	Capacitor:0.1µF:+80-20%:25V	
310	1902 0070	SRAM - 1M:X8:3.3V:G2	

Index No.	Part No.	Description	Q'ty Per Assembly
311	1906 0143	Flash ROM:16M:X8X16:Bottom:TSOP	
312	1907 0012	SDRAM - 128M 2Mx16x4 133MHz	

28.Decals And Documents (C275)

1

2

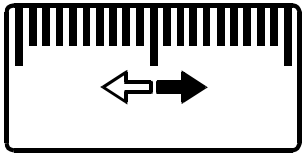

3

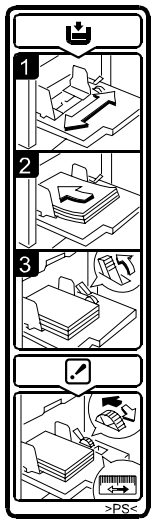

4

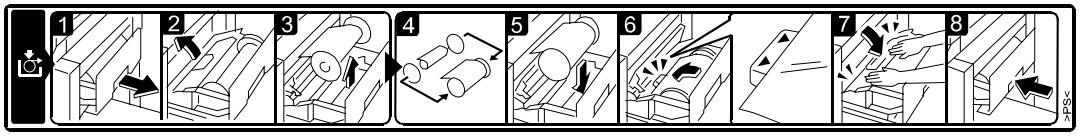

5

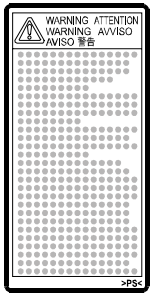

6

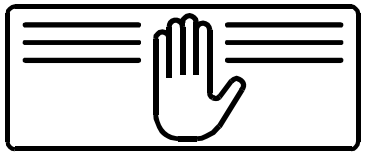

7

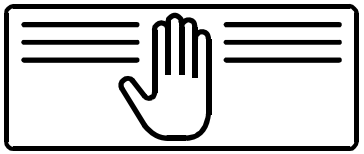

28.Decals And Documents (C275)

8

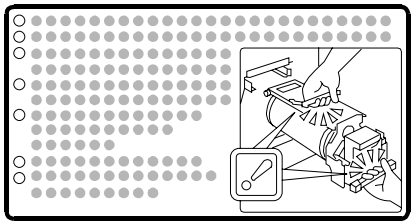

10

12

9

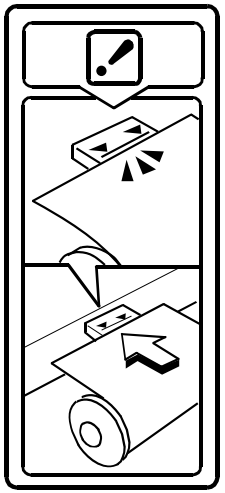

11

28.Decals And Documents (C275)

13

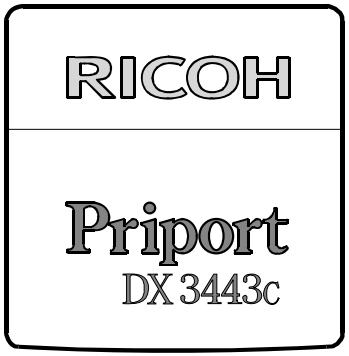

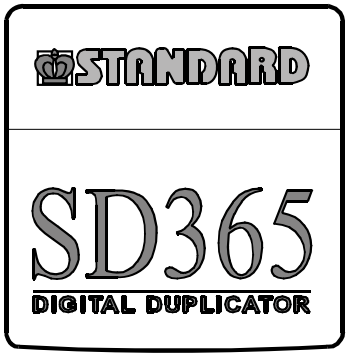

14

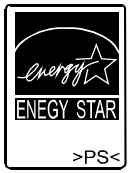

28.Decals And Documents (C275)

Index No.	Part No.	Description	Q'ty Per Assembly
1	C238 1352	Decal - Paper Table	1
2	C238 2967	Decal:Adjustment Scale:Paper Feed	1
3	C238 2996	Decal - Paper Set	1
4	C271 1330	Decal:Master Set Instructions:PS	1
5	C252 1341	Decal:Caution Chart	1
6	C252 1971	Decal:Open And Close:Plotter:Left	1
7	C252 1972	Decal:Open And Close:Plotter:Left	1
8	C252 2524	Decal:Pull Out:Drum	1
9	C274 1331	Decal:Master Set Instructions:Stopper Guide	1
10	C267 1341	Decal:Main Switch:CHN	1
11	C267 2995	Decal:Paper Feed Pressure:English	1
11	C267 2996	Decal:Paper Feed Pressure:CHN	1
12	C267 2998	Decal:Size Indication:Paper Feed	1
13	C275 1351	Sheet:EMBLEM:RIC:CHN	1
13	C275 1352	Sheet:EMBLEM:RIC:AA	1
13	C275 1361	Sheet:EMBLEM:GES:CHN	1
13	C275 1362	Sheet:EMBLEM:GES:AA	1
13	C275 1381	Sheet:EMBLEM:STD	1
14	AA00 1468	Decal:ENERGY-STAR	1
14	AA00 1477	Decal:ENERGY-STAR	1

Index No.	Part No.	Description	Q'ty Per Assembly

29.Special Tools (C275)

1	2	3
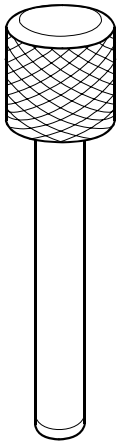	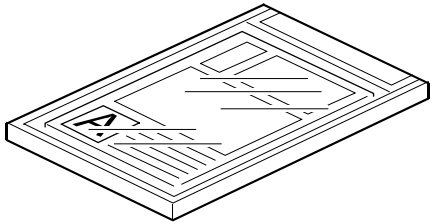	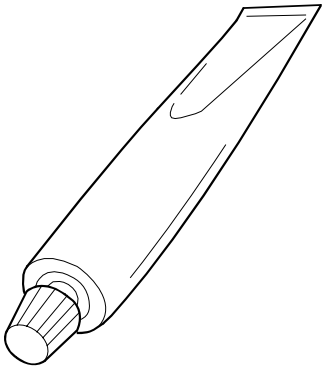

29.Special Tools (C275)

Index No.	Part No.	Description	Q'ty Per Assembly
1	A006 9104	Scanner Positioning Pin (4pcs/set)	1
2	N803 6701	Flash Memory Card - 4MB	1
3	A069 9502	Alvania 2 Grease	1

Index No.	Part No.	Description	Q'ty Per Assembly

Parts Index

PM Parts Index

Section Name	Part No.	Description in Service Manual	Description in Parts Catalog	Q'ty Per Assembly	Page and Index No.
Paper Registration 1 (C275)	C267 2802	Roller:Paper Feed:Ass'y	Roller:Paper Feed:Ass'y	2	21 - 4
Paper Registration 1 (C275)	C267 2819	Separation Pad:Ass'y	Separation Pad:Ass'y	1	21 - 27
Paper Registration 1 (C275)	C267 2820	Separation Pad:Chn:Ass'y	Separation Pad:Chn:Ass'y	1	21 - 27
Press Roller Section (C275)	C267 3050	Pressure Roller:B4:Ass'y	Pressure Roller:B4:Ass'y	1	33 - 16
Press Roller Section (C275)	C267 3052	Pressure Roller:A4/LG:Ass'y	Pressure Roller:A4/LG:Ass'y	1	33 - 16
Drum Unit 1 (C275)	C252 2340	Screen:B4:Ass'y	Screen:B4:Ass'y	1	35 - 39
Drum Unit 1 (C275)	C252 2341	Screen:LG:Ass'y	Screen:LG:Ass'y	1	35 - 39
Drum Unit 1 (C275)	C267 2342	Screen:A4:Ass'y	Screen:A4:Ass'y	1	35 - 39
Vacuume Fan Unit (C275)	C261 3879	Transport Belt:Hale Unit:17	Transport Belt:Hale Unit:17	2	41 - 1

Parts Index

Part No.	Description	Page and Index No.
C275 1156	Shaft:Belt Tensioner:Ass'y	55 - 14
C275 1160	Gear:Drive:Drum:Ass'y	53 - 6
C275 1172	Side Plate:Drum Drive Sub-unit	53 - 8
C275 1173	Stopper:Gear:Remover/Install	53 - 15
C275 1174	Tension Spring:Lock:Gear:Remover/Install	53 - 25
C275 1177	Spacer:Power Supply Unit	53 - 16
C275 1180	Timing Belt:Drive:Main	53 - 7
C275 1303	Cover:Rear	9 - 12
C275 1307	Cap:UC2	9 - 13
C275 1308	Cap:FVLT	9 - 22
C275 1342	Decal:Size Indication:A3:ABS	43 - 27
C275 1351	Sheet:EMBLEM:RIC:CHN	9 - 17
C275 1351	Sheet:EMBLEM:RIC:CHN	75 - 13
C275 1352	Sheet:EMBLEM:RIC:AA	75 - 13
C275 1352	Sheet:EMBLEM:RIC:AA	9 - 17
C275 1361	Sheet:EMBLEM:GES:CHN	75 - 13
C275 1361	Sheet:EMBLEM:GES:CHN	9 - 17
C275 1362	Sheet:EMBLEM:GES:AA	75 - 13
C275 1362	Sheet:EMBLEM:GES:AA	9 - 17
C275 1381	Sheet:EMBLEM:STD	9 - 17
C275 1381	Sheet:EMBLEM:STD	75 - 13
C275 1910	Plotter:UNI:B4	27 - *
C275 1911	Plotter:UNI:LG	27 - *
C275 2324	Holder:Ink Cartridge:NA:RIC:Ass'y	35 - 35
C275 2676	Holder:Ink Cartridge:NA:RIC:Ass'y (-92)	35 - 15
C275 2710	Paper Feed Tray:CHN:Ass'y	19 - 21
C275 2869	Bracket:Guide Plate:Front	25 - 19
C275 2870	Bracket:Guide Plate:Rear	25 - 17
C275 2871	Feed Roller:Upper:Ass'y	25 - 23
C275 2895	Arm:Feed Roller:Upper	25 - 6
C275 2898	Screw:M4x6	25 - 25
C275 3400	Master Ejection Unit:Ass'y	45 - *
C275 3510	Case:Master Ejection Unit:Ass'y	45 - 1
C275 3801	Drum Stay:Paper Exit Sub-unit:Ass'y	57 - 16
C275 3804	Hale Unit:Ass'y	41 - *

Part No.	Description	Page and Index No.
C275 3875	Pulley:Drive:Hale Unit	41 - 6
C275 3876	Shaft:Drive:Hale Unit:Sub-ass'y	41 - 16
C275 3879	Timing Belt:Drive:Hale Unit	41 - 3
C275 5102	PCB:MPU:Ass'y	49 - 5
C275 5102	PCB:MPU:Sub-ass'y	67 - *
C275 5200	Harness:DC Drive:Ass'y	49 - 3
C275 5201	Harness:Motor:Ass'y	49 - 4
C275 5206	Harness:Ink:Ass'y	49 - 13
C275 5244	Harness:Connecting:Plotter:2:Ass'y	27 - 21
C275 5244	Harness:Connecting:Plotter:2:Ass'y	59 - 19
C275 5245	Harness:Connecting:Cutter Unit:Ass'y	59 - 20
C275 5261	Harness:Connecting:Hale Unit:Ass'y	41 - 14
C275 5262	Harness:Connecting:Hale:Fan:Ass'y	41 - 15
C275 5281	Harness:Connecting:ADF:Ass'y	49 - 7
C275 5300	DC Power Supply:Main:NA:Ass'y	49 - 11
C275 5310	DC Power Supply:Main:EU:Ass'y	49 - 11
C275 5614	Bracket:UC2:Front	55 - 2
C275 5615	Bracket:UC2:Rear	55 - 3
C275 5617	Bracket:Fix:MPU:Upper	55 - 28
C275 5619	Bracket:Fix:Power Supply Unit:Upper	55 - 27
C275 5675	Bracket:ADF:Connector	49 - 6
C275 5685	Bracket:On Off Detector:Door	51 - 11
C275 5811	DC Motor:2.5W:DIA34:Z15	41 - 4
C275 8602	Operating Instructions:STD	9 - 21
C275 8603	Operating Instructions:RIC:CHN	9 - 21
C275 8604	Operating Instructions:GES:CHN	9 - 21
C275 8605	Operating Instructions:AA	9 - 21
C275 8608	Operating Instructions:AM	9 - 21

Part No.	Description	Page and Index No.
A006 9104	Scanner Positioning Pin (4pcs/set)	77 - 1
A069 9502	Alvania 2 Grease	77 - 3
A193 1793	Scanner Home Sensor Stopper	13 - 5
A250 1752	Exposure Glass	13 - 10
A250 5725	Rocker Switch	51 - 28
A267 1820	Sheet - Photointerrupter	57 - 6
A267 1820	Sheet - Photointerrupter	55 - 26
A267 1820	Sheet - Photointerrupter	53 - 3
A267 1820	Sheet - Photointerrupter	19 - 7
A267 1820	Sheet - Photointerrupter	47 - 18
A267 1820	Sheet - Photointerrupter	45 - 18
A267 1820	Sheet - Photointerrupter	33 - 33
A267 1820	Sheet - Photointerrupter	31 - 31
A267 1820	Sheet - Photointerrupter	23 - 7
A659 1272	Door Catch	27 - 18
B039 1068	ADF Bracket	13 - 7
B039 1303	Rear Scanner Cover	9 - 11
B039 1658	Rear Scale Bracket	13 - 16
B039 1662	Front Scanner Frame	17 - 2
B039 1663	Rear Scanner Frame	17 - 1
B039 1666	Bracket - Operation Panel	13 - 12
B039 1668	Bracket - Stabilizer Harness	17 - 13
B039 1670	Scanner Drive Motor - DC3.6V 2.88W	17 - 15
B039 1683	Tension Spring - Stepper Motor	17 - 17
B039 1692	Pulley - 37Z	17 - 12
B039 1694	Pulley - 37/41Z	17 - 10
B039 1695	Flange - Pulley	17 - 9
B039 1697	Timing Belt - 1058.25XL	17 - 7
B039 1703	Pulley - 37Z	17 - 3
B039 1704	Spring - Timing Pulley	17 - 5
B039 1705	Bracket:Idler	17 - 4
B039 1710	Left Scanner Bracket	13 - 3
B039 1712	Right Scanner Bracket	13 - 14
B039 1758	Timing Belt Holder - Front	15 - 11
B039 1759	Timing Belt Holder - Rear	15 - 13

Part No.	Description	Page and Index No.
B039 1781	2nd Mirror Holder	15 - 2
B039 1784	Scanner Drive Belt	15 - 6
B039 1785	Scanner Drive Pulley	15 - 3
B039 1787	2nd Mirror	15 - 1
B039 1790	Tension Spring	15 - 8
B039 1829	Flat Cable Sheet	13 - 18
B040 5506	IC:IMAC_K:RF5C789	67 - 1
B121 1664	Bracket - Timing Belt	17 - 14
B121 1667	Lens Stay Bracket	17 - 6
B121 1680	Gear - 53Z/60Z	17 - 18
B121 1696	Timing Belt L147	17 - 8
B121 1751	No.1 Carriage Ass'y	15 - 12
B121 1757	Xenon Lamp MM8 26000/70	15 - 10
B121 1762	No.1 Mirror	15 - 15
B121 1766	No.1 Mirror Clamp	15 - 14
B121 1782	Flexible Board Guide	15 - 4
B121 5502	LSI:TRIO:UPD65945GD-103-LML-A	67 - 2
B129 1495	LCD	11 - 19
B132 1531	Panel:Logo	9 - 2
B150 1840	Sheet:Flat Cable:35x70	13 - 19
B259 1691	Scanner Drive Shaft	17 - 11
B259 1702	Pulley Shaft	17 - 16
B259 1763	Xenon Lamp Stabilizer	15 - 16
B259 1768	Carriage No.2 Ass'y	15 - 5
B259 1776	Idler Belt Pulley Bracket - Front	15 - 9
B259 1778	Idler Belt Pulley Bracket - Rear	15 - 7
B259 1812	Lens Unit	13 - 9
B268 1751	Scale - Inner Back	13 - 11
B276 1808	Inner Cover	13 - 8
B390 1759	Shaft:Scale	13 - 1
C200 4748	Gear - 45T	39 - 25
C201 5051	Pinion - 24T	21 - 15
C203 5135	Bushing - 10x14x5.9	21 - 31
C207 4672	Gear - 36Z	39 - 5
C209 5220	Spacer - 4x20x6	23 - 8

Part No.	Description	Page and Index No.
C209 5220	Spacer - 4x20x6	21 - 19
C217 4581	Ink Roller Drive Gear	37 - 27
C217 5102	Spring Washer	29 - 27
C218 4592	Front Bank Plate	39 - 17
C218 4594	Rear Bank Plate	39 - 19
C225 6113	Upper Pressure Spring Pin	43 - 16
C229 2276	Middle Plotter Rail	59 - 16
C229 2615	Slide Rail Roller	33 - 7
C229 2907	Registration Roller Pulley - 14Z	25 - 22
C231 2135	Platen Gear - 2	31 - 25
C231 2146	Platen Roller Gear	29 - 11
C231 2147	Idler Gear	29 - 10
C231 2148	Tension Roller Gear	29 - 9
C231 2234	Brake Pad	31 - 27
C231 2417	Master Exit Pawls	37 - 2
C231 2450	Ink Roller - B4	39 - 12
C231 2456	Ink Roller - A4/LG	39 - 12
C231 2565	Ink Cartridge Joint	37 - 28
C231 2766	Pressure Pin	25 - 8
C231 2922	Pressure Roller	23 - 28
C231 2922	Pressure Roller	21 - 23
C231 2965	Core	19 - 5
C231 2971	Lock Cam	19 - 41
C231 2976	Washer	19 - 38
C231 2985	Spring	19 - 30
C231 3489	Lower Roller Gear	47 - 22
C231 3494	Gear - Lower Roller	47 - 20
C231 4413	Delivery Table Spring	43 - 15
C231 4414	Lower Side Fence Pin	43 - 18
C231 4415	Upper Side Fence Pin	43 - 19
C231 4419	End Plate Pin	43 - 17
C231 4420	Slider Spring Plate	43 - 11
C231 4425	End Plate Sheet	43 - 22
C237 2460	Ink Drive Gear	39 - 29
C237 3505	Pin 3x16	47 - 19

Part No.	Description	Page and Index No.
C238 1057	Rubber Foot	59 - 18
C238 1339	Key Counter Plate Nut	57 - 19
C238 1352	Decal - Paper Table	75 - 1
C238 1352	Decal - Paper Table	9 - 9
C238 1962	Front Spring	29 - 24
C238 2037	Lever Knob	29 - 14
C238 2106	Ball Bearing - 6x13x5mm	29 - 12
C238 2243	Master Flange - MH	29 - 25
C238 2243	Master Flange - MH	9 - 25
C238 2244	Flange:Master:50.8/20	9 - 25
C238 2244	Flange:Master:50.8/20	29 - 25
C238 2368	Drum Drive Gear	37 - 11
C238 2410	Clamper Rear Spring	37 - 6
C238 2412	Clamper Cam	37 - 30
C238 2413	Sheet:Sensor:Trailing Edge:Screen	37 - 21
C238 2469	Doctor Roller Drive Gear	39 - 6
C238 2488	Rubber Bushing	39 - 33
C238 2489	Rubber Bushing Plate	39 - 32
C238 2489	Rubber Bushing Plate	35 - 20
C238 2572	Stopper Spring	37 - 22
C238 2573	Stepped Screw	35 - 23
C238 2585	Screw MM6x1.7	35 - 26
C238 2585	Screw MM6x1.7	37 - 26
C238 2770	Paper Side Pad	9 - 24
C238 2770	Paper Side Pad	19 - 19
C238 2785	Tray Motor Bracket	51 - 20
C238 2800	Tray Lift Bracket	19 - 3
C238 2805	Tray Lift Slider	19 - 4
C238 2806	Tray Position Feeler	19 - 12
C238 2825	Sensor Bracket	19 - 14
C238 2853	Sensor Cleaning Spring	25 - 15
C238 2855	Sensor Cleaning Lever	25 - 10
C238 2856	Sensor Cleaning Brush	25 - 16
C238 2894	Upper Registration Roller	25 - 3
C238 2921	Registration Sensor Bracket	25 - 11

Part No.	Description	Page and Index No.
C238 2929	Spring Plate	21 - 21
C238 2929	Spring Plate	23 - 13
C238 2936	Arm Bracket	23 - 15
C238 2939	Spring	23 - 9
C238 2948	Timing Belt - 140-XL-050	53 - 12
C238 2967	Decal:Adjustment Scale:Paper Feed	75 - 2
C238 2967	Decal:Adjustment Scale:Paper Feed	19 - 40
C238 2981	Rear Side Fence Rack	19 - 27
C238 2986	Sensor Bracket - Paper Feed Tray	19 - 15
C238 2987	Side Fence Gear	19 - 29
C238 2996	Decal - Paper Set	19 - 10
C238 2996	Decal - Paper Set	75 - 3
C238 3126	Pressure Spring Screw	33 - 13
C238 3127	Pressure Spring Nut	33 - 1
C238 3877	Driven Shaft	41 - 9
C238 3890	Drive Roller - Drum Side	41 - 8
C238 4070	Eject Clamp Pusher	55 - 21
C238 4395	Front Lower Guide	43 - 21
C238 4396	Rear Lower Guide	43 - 6
C238 4397	Front Lower Guide - CHN	43 - 21
C238 4398	Rear Lower Guide - CHN	43 - 6
C238 4406	End Plate Knob	43 - 3
C238 4421	Slider Cover	43 - 24
C238 4450	Hinge Screw	57 - 12
C238 4456	Slider Cover	43 - 12
C238 4493	Exit Pawl Drive Arm 2	33 - 5
C238 5630	Tape Marker Bracket	55 - 23
C238 5651	Total Counter Bracket	51 - 16
C244 1098	Pan Head Screw:Lock:M4x4	19 - 37
C244 2633	Stepped Screw	51 - 30
C244 4426	Shoulder Screw	53 - 14
C244 4426	Shoulder Screw	43 - 20
C244 4426	Shoulder Screw	55 - 18
C247 2461	Adjusting Plate - Doctor Roller	39 - 26
C248 4390	Bottom Plate	43 - 10

Part No.	Description	Page and Index No.
C248 4407	Side Fence Case	43 - 5
C249 1356	Counter Sheet	9 - 18
C249 2230	Brake Shoe	31 - 30
C249 2790	Spring Plate:Spacer:Paper Feed Tray	19 - 22
C249 2840	Paper Feed Tray Pad	19 - 20
C249 2944	Table Sheet	19 - 42
C249 3487	Box Lever	45 - 2
C252 1080	Bushing	21 - 8
C252 1080	Bushing	25 - 21
C252 1080	Bushing	33 - 18
C252 1152	Timing Pulley:Drive:Main	55 - 6
C252 1154	Roller:Belt Tensioner:Ass'y	55 - 13
C252 1179	Pulley:Drive:Paper Feed	53 - 5
C252 1195	Hexagonal Set Screw:M5x8	55 - 7
C252 1341	Decal:Caution Chart	75 - 5
C252 1341	Decal:Caution Chart	9 - 5
C252 1950	Positioning Pin:Coupling:Plotter:Ass'y	29 - 21
C252 1971	Decal:Open And Close:Plotter:Left	29 - 2
C252 1971	Decal:Open And Close:Plotter:Left	75 - 6
C252 1972	Decal:Open And Close:Plotter:Left	75 - 7
C252 1972	Decal:Open And Close:Plotter:Left	29 - 3
C252 2082	Guide Plate:Brake:Lower:Plotter:Sub-ass'y	31 - 2
C252 2085	Guide Plate:Brake:Upper:Plotter	31 - 1
C252 2092	Guide Plate:Thermal Head:Ass'y	31 - 19
C252 2157	Spring:Thermal Head:Both Ends	31 - 13
C252 2281	Discharge Brush:Cutter	31 - 3
C252 2281	Discharge Brush:Cutter	29 - 1
C252 2340	Screen:B4:Ass'y	35 - 39
C252 2341	Screen:LG:Ass'y	35 - 39
C252 2370	Spacer:Drum Shaft:Right	37 - 9
C252 2395	Plate:Thrust:Drum	37 - 13
C252 2396	Wedge:Plate:Thrust	37 - 12
C252 2397	Collar:Drum Shaft:Left	39 - 23
C252 2398	Spacer:Drum Shaft:Left	39 - 22
C252 2410	Torsion Spring:Pawl:Master Ejection:Master	37 - 25

Part No.	Description	Page and Index No.
C252 2412	Friction Pad:Screen:Large (B4)	35 - 37
C252 2413	Friction Pad:Screen:Small	35 - 38
C252 2414	Friction Pad:Screen:LG/A4	35 - 37
C252 2458	Oil Supply Roller:B4	39 - 13
C252 2459	Oil Supply Roller:LG/A4	39 - 13
C252 2470	Stay:Ink Sensor	39 - 10
C252 2475	Side Plate:Roller:Ink:Left	39 - 20
C252 2476	Side Plate:Roller:Ink:Right:Ass'y	39 - 2
C252 2485	Joint:Drum Shaft	39 - 31
C252 2492	Tension Spring:Ring:Roller:Drum	39 - 16
C252 2495	Plate:Side Plate:Roller:Ink	39 - 21
C252 2524	Decal:Pull Out:Drum	75 - 8
C252 2524	Decal:Pull Out:Drum	35 - 34
C252 2526	Grip:Drum:Upper	35 - 32
C252 2534	Grip:Drum:Lower	35 - 16
C252 2559	Spring:Pressure:Ink Cartridge	35 - 6
C252 2590	Metal Screen - B4	37 - 20
C252 2593	Dram Metal Screen:Drum:LG:Ass'y	37 - 20
C252 2810	Grip Rings:Mm8	21 - 7
C252 2878	Spring:Pressure:Feed Roller	25 - 4
C252 2888	Pulley:Stepper Motor:Feed:23Z	53 - 17
C252 3140	Spring:Pressure:B4	33 - 14
C252 3486	Bushing:Pressure:MM6	47 - 16
C252 3487	Spring:Pressure:Roller:Master Ejection	47 - 15
C252 3492	Gear:Roller:50/84	47 - 21
C252 3525	Gear:Pressure:15/124	47 - 17
C252 3556	Spring:Pressure:Master Ejection:13.98N	47 - 6
C252 3684	Gear:Pressure Plate:Master Ejection	47 - 14
C252 4052	Rack:Drive:Clamp	55 - 22
C252 4062	Guide:Positioning:Drum	55 - 20
C252 4063	Guide:Clamp:Master Feed	55 - 15
C252 4068	Gear:Drive:Rack	53 - 22
C252 4069	Gear:Slow Down	53 - 23
C252 4365	Pickoff Pawl:Exit	33 - 3
C252 5145	IC:LC272C9BT-WA5	67 - 3

Part No.	Description	Page and Index No.
C257 2869	Feeler Roller	21 - 2
C257 5807	Photo Reflection Sensor:GP2A25	25 - 13
C257 5817	Stepper Motor MM56x64	53 - 20
C257 5854	Master Duct Sensor	31 - 17
C257 5856	Push Switch	51 - 23
C259 5814	DC Motor:Paper Feed Tray:24V	51 - 21
C259 5821	Stepper Motor:DIA42:Plotter:Ass'y	47 - 11
C259 5821	Stepper Motor:DIA42:Plotter:Ass'y	53 - 11
C261 1056	Shaft:Stay:Machine Or Copier	25 - 12
C261 1171	Bearing Case	53 - 9
C261 1955	Stay:Coupling:Plotter	29 - 20
C261 1961	Spring:Open And Close:Rear:Plotter	29 - 26
C261 2026	Base:Thermal Head	31 - 15
C261 2030	Rear Plate:Open And Close	29 - 8
C261 2036	Lever:Open And Close:Plotter	29 - 15
C261 2039	Spring:Lever:Lock:Plotter	29 - 13
C261 2040	Side Plate:Open And Close:Front:Plotter:Ass'y	29 - 16
C261 2045	Cover:Open And Close:Plotter	29 - 4
C261 2046	Guide Plate	29 - 5
C261 2052	Positioning Plate:Master	31 - 8
C261 2054	Spring:Positioning Plate:Master	31 - 10
C261 2077	Roller:Brake:Plotter	31 - 4
C261 2104	Platen:B4	29 - 23
C261 2105	Platen:A4/LG	29 - 23
C261 2108	Cover:Open And Close:Lower	29 - 17
C261 2114	Roller:Tension:B4	29 - 6
C261 2115	Roller:Tension:LG	29 - 6
C261 2151	Thermal Head:B4	31 - 11
C261 2156	Spring:Thermal Head:Middle	31 - 14
C261 2271	Cutter Unit:B4:Ass'y	29 - 18
C261 2273	Bracket:On Off Detector:Plotter	31 - 28
C261 2279	Bracket:Sensor:Master	31 - 18
C261 2368	Shielding Plate:Drum	37 - 15
C261 2388	Stay:Screen:Front:B4	37 - 17
C261 2389	Stay:Screen:Rear:B4	37 - 18

Part No.	Description	Page and Index No.
C261 2390	Stay:Screen:Front:A4/LG	37 - 17
C261 2391	Stay:Screen:Rear:A4/LG	37 - 18
C261 2401	Clamp:Ass'y	37 - 1
C261 2402	Base:Clamp:Drum:Ass'y	37 - 3
C261 2405	Plate:Clamp	37 - 7
C261 2406	Shaft:Clamp:Drum	37 - 5
C261 2463	Stay:Main:Drum:B4	39 - 11
C261 2464	Stay:Main:Drum:A4/LG	39 - 11
C261 2465	Stay:Sub:Drum:B4	39 - 14
C261 2466	Stay:Sub:Drum:A4/LG	39 - 14
C261 2471	Ink Sensor:Ass'y	39 - 9
C261 2520	Side Plate:Drum:Left	37 - 4
C261 2521	Side Plate:Drum:Right	37 - 14
C261 2530	Arm:Grip:Left	35 - 14
C261 2531	Arm:Grip:Right	35 - 10
C261 2533	Screw:Arm:Drum	35 - 19
C261 2535	Shaft:Contact Point:Arm:Drum	35 - 13
C261 2538	Bracket:Housing:Drum	35 - 21
C261 2543	Cover:Harness:Drum	35 - 18
C261 2552	Screw:Slider	35 - 1
C261 2552	Screw:Slider	51 - 3
C261 2553	Rail:Holder:Left	35 - 7
C261 2554	Rail:Holder:Right	35 - 8
C261 2555	Guide:Slider:Right	35 - 5
C261 2556	Lever:Release:Holder:Ass'y	35 - 11
C261 2558	Base:Lever:Release	37 - 29
C261 2560	Spring:Lever:Release	35 - 12
C261 2567	Stay:Coupling:Grip	35 - 27
C261 2601	Stay:Drum:Machine Or Copier:Ass'y	33 - 8
C261 2605	Positioning Pin:Drum:Ass'y	33 - 23
C261 2611	Bracket:Receptacle	51 - 15
C261 2817	Bracket:Drive:Paper Feed Roller	53 - 2
C261 2831	Holder:Spring:Separation	21 - 25
C261 2832	Compression Spring:Separation Pad	21 - 26
C261 2835	Adjusting Pin	21 - 24

Part No.	Description	Page and Index No.
C261 2844	Screw:Separation Unit	25 - 14
C261 2844	Screw:Separation Unit	21 - 30
C261 2872	Shaft:Swivel:Feed Roller:Upper	25 - 9
C261 2875	Arm:Pressure:Feed Roller:Ass'y	25 - 5
C261 2881	Feed Roller:Lower	25 - 2
C261 2887	Bracket:Stepper Motor:Feed	53 - 19
C261 3100	Side Plate:Pressure:Left:Ass'y	33 - 24
C261 3103	Side Plate:Pressure:Right:Ass'y	33 - 15
C261 3110	Arm:Pressure Roller:Left:Ass'y	33 - 21
C261 3113	Arm:Pressure Roller:Right:Ass'y	33 - 17
C261 3116	Bracket:Stopper:Pressure Roller	33 - 20
C261 3117	Stopper:Pressure Roller	33 - 19
C261 3120	Anchor:Spring:Pressure:Left:Ass'y	33 - 27
C261 3123	Anchor:Spring:Pressure:Right:Ass'y	33 - 11
C261 3131	Bracket:Pressure Release:Left	33 - 34
C261 3135	Bracket:Pressure Release:Right	33 - 31
C261 3137	Spring:Pressure Release	33 - 26
C261 3141	Spring:Pressure:A4/LG	33 - 14
C261 3160	Arm:Pressure Release:Left:Ass'y	33 - 32
C261 3165	Arm:Pressure Release:Right:Ass'y	33 - 29
C261 3466	Base:Master Ejection	47 - 10
C261 3467	Bracket:Sensor:Master Ejection Unit	45 - 11
C261 3469	Duct:Air Knife	45 - 15
C261 3470	Base:Air Knife	45 - 17
C261 3472	Cover:Sensor:Master Ejection Unit	45 - 12
C261 3482	Roller:Lower:Master Ejection Unit:Ass'y	47 - 9
C261 3553	Arm:Pressure:Master Ejection	47 - 5
C261 3554	Shaft:Pressure:Master Ejection Unit	47 - 4
C261 3567	Guide Plate	47 - 2
C261 3577	Plate:Master	45 - 4
C261 3656	Pressure Plate:Master Ejection	47 - 7
C261 3855	Bracket:Fan:Hale Unit:Ass'y	41 - 10
C261 3861	Duct:Hale Unit	41 - 7
C261 3879	Transport Belt:Hale Unit:17	41 - 1
C261 3885	Discharge Brush:Long:Paper Exit	57 - 20

Part No.	Description	Page and Index No.
C261 3886	Discharge Brush:Short:Paper Exit	57 - 21
C261 3890	Guide:Hale Unit	41 - 2
C261 4001	Base:Clamp:Open And Close:Ass'y	55 - 17
C261 4055	Lever:Drive:Master Feed:Peen	55 - 16
C261 4059	Lever:Drive:Master Ejection:Peen	55 - 19
C261 4064	Side Plate:Drive Sub-unit:Clamp	53 - 24
C261 4401	Stay:Front:Paper Exit Sub-unit	43 - 13
C261 4402	Stay:Rear:Paper Exit Sub-unit	43 - 9
C261 4409	Supporting Plate:Paper Exit	43 - 14
C261 4481	Arm:Drive:Pickoff Pawl	33 - 2
C261 4485	Bracket:Roller:Pressure Release	33 - 6
C261 5050	Photointerrupt:Master Ejection	45 - 10
C261 5150	PCB:Optics Sensor	45 - 13
C261 5253	Harness:Ink Sensor:Ass'y	39 - 24
C261 5610	Bracket:Home Position Sensor	55 - 12
C261 5611	Bracket:Sensor:Paper Feed Control	33 - 10
C261 5686	Screw:Round Point:Safety Switch	51 - 27
C261 5825	Fan:Sirocco:DC24V:B054	45 - 16
C261 5879	Magnetic Clutch:Paper Feed Roller	53 - 4
C264 2898	Shaft:Arm:Feed Roller:Upper	25 - 7
C267 1056	Shaft:Stay:Machine Or Copier:DIA12	25 - 1
C267 1058	Stay:Machine Or Copier:Scanner Unit	59 - 3
C267 1060	Cover:Side Plate:Machine Or Copier:Front	51 - 4
C267 1065	Bracket:Fix:Scanner:Right	59 - 13
C267 1066	Bracket:Fix:Scanner:Left	59 - 5
C267 1070	Guard:Rack:Paper Feed Tray	59 - 17
C267 1074	Bracket:On Off Detector:	
	Machine Or Copier:Plotter	51 - 18
C267 1075	Cover:Harness:Operation Panel:Upper Left	59 - 1
C267 1076	Bracket:Link:Lower	59 - 10
C267 1077	Link:Machine Or Copier:Plotter:Front:Peen	59 - 7
C267 1079	Screw:DIA4	59 - 6
C267 1081	Cover:Harness:Operation Panel:2	59 - 12
C267 1082	Slider:Harness:Machine Or Copier:Plotter	59 - 8

Part No.	Description	Page and Index No.
C267 1085	Cover:On Off Detector:	
	Machine Or Copier:Upper	51 - 17
C267 1087	Link:Machine Or Copier:Plotter:	
	Inner Back:Peen	59 - 9
C267 1185	Base:Brushless Motor:Main	55 - 8
C267 1301	Cover:Door	9 - 1
C267 1302	Cover:Front	9 - 8
C267 1304	Cover:Plotter	27 - 12
C267 1305	Cover:Scanner:Right	9 - 15
C267 1306	Cover:Scanner:Left	9 - 10
C267 1311	Hinge:Door:Upper:Ass'y	9 - 6
C267 1312	Hinge:Door:Lower:Ass'y	9 - 7
C267 1321	Bracket:Plate:Cover:Front	51 - 22
C267 1331	Sheet:Receiving Sub-unit:Door:Front	9 - 19
C267 1341	Decal:Main Switch:CHN	75 - 10
C267 1341	Decal:Main Switch:CHN	9 - 4
C267 1470	Keytop:Numeric	11 - 13
C267 1471	Keytop:Program	11 - 10
C267 1472	Keytop:Start	11 - 15
C267 1473	Keytop:Clear/Stop	11 - 14
C267 1475	Keytop:Magnification	11 - 8
C267 1476	Keytop:Try Print	11 - 12
C267 1477	Keytop:Return	11 - 9
C267 1478	Keytop:Contenuance	11 - 16
C267 1479	Keytop:User Tools	11 - 7
C267 1480	Sheet:Operation Sub-unit:Right:English	11 - 4
C267 1482	Sheet:Operation Sub-unit:Right:EU	11 - 4
C267 1483	Sheet:Operation Sub-unit:Left:EU	11 - 2
C267 1484	Sheet:Operation Sub-unit:Right:Chinese	11 - 4
C267 1492	Keytop:Reset	11 - 11
C267 1495	Lens:LED:Operation Sub-unit	11 - 5
C267 1496	Bracket:Operation Sub-unit:Left	11 - 1
C267 1497	Bracket:Operation Sub-unit:Right	11 - 17
C267 1551	Bracket:Plate:Operation Sub-unit	59 - 2
C267 1660	Scale:Left:Ass'y	13 - 2

Part No.	Description	Page and Index No.
C267 1801	Guide:Harness:Stabilizer	55 - 11
C267 1802	Guide:Harness	55 - 10
C267 1994	Stopper:Rail:Plotter:Middle	27 - 9
C267 2010	Side Plate:Fix:Rear:Plotter:Ass'y	31 - 24
C267 2020	Side Plate:Fix:Front:Plotter:Ass'y	31 - 16
C267 2064	Lever:Roller:Brake	31 - 5
C267 2066	Spring:Roller:Brake:Plotter	31 - 9
C267 2078	Bracket Shoe:Roller:Brake:Plotter	31 - 6
C267 2095	Guide Plate:Master	31 - 20
C267 2133	Gear:Idler:1:Platen	31 - 26
C267 2160	Bracket:Slide Rail:Plotter:Rear	27 - 11
C267 2161	Bracket:Harness:Rear:Plotter	27 - 7
C267 2164	Cover:Harness:Exit:Upper:Plotter	27 - 2
C267 2165	Cover:Harness:Exit:Lower:Plotter	27 - 6
C267 2166	Bracket:On Off Detector Board:Upper:Plotter	27 - 17
C267 2167	Cover:Harness:Left	27 - 1
C267 2170	Bracket:Slide Rail:Plotter:Front	27 - 15
C267 2172	Lever:Safety Switch	51 - 12
C267 2173	Cover:Upper:Plotter:2	27 - 5
C267 2174	Bracket:Connector:Plotter	27 - 3
C267 2176	Spring Plate:Safety Switch	51 - 25
C267 2177	Cover:Rear:Plotter	27 - 8
C267 2178	Cover:Front:Plotter	27 - 16
C267 2182	Bracket:Harness:Left Inner Rear:Plotter	27 - 4
C267 2186	Slide Rail:Plotter:Inner	27 - 10
C267 2210	Holder:Master:Rear	29 - 22
C267 2220	Holder:Master:Front	29 - 19
C267 2267	Bearing Case:Transmission	25 - 20
C267 2275	Rail:Plotter:Outer	59 - 15
C267 2288	Bracket:On Off Detector:Lower:Plotter:2	27 - 14
C267 2290	Base:Fix:Plotter:2:Peen	31 - 21
C267 2322	Holder:Ink Cartridge:WLD:Ass'y	35 - 35
C267 2323	Holder:Ink Cartridge:NA:STD:Ass'y	35 - 35
C267 2342	Screen:A4:Ass'y	35 - 39
C267 2360	Flange:Drum:B4/LG:Left:Ass'y	37 - 8

Part No.	Description	Page and Index No.
C267 2362	Flange:Drum:B4/LG:Right:Ass'y	37 - 10
C267 2364	Flange:Drum:A4:Left:Ass'y	37 - 8
C267 2366	Flange:Drum:A4:Right:Ass'y	37 - 10
C267 2390	Sheet:Sensor:Drum	35 - 36
C267 2394	Spring Plate:Grip:Drum	35 - 33
C267 2395	Bracket:Stopper:Drum	35 - 28
C267 2396	Spring Plate:Stopper	35 - 25
C267 2416	Friction Pad:Small:Magnetic	37 - 19
C267 2422	Pump Unit:Ink:B4:Ass'y	39 - 1
C267 2423	Pump Unit:Ink:A4/LG:Ass'y	39 - 1
C267 2424	Filter:Pump:Ink	37 - 16
C267 2458	Ring:Front:Roller:Drum	39 - 15
C267 2459	Ring:Rear:Roller:Drum	39 - 18
C267 2468	Ground Plate:Oil Supply Roller:Ink	39 - 7
C267 2481	Drum Shaft:B4:Ass'y	39 - 8
C267 2487	Drum Shaft:A4/LG:Ass'y	39 - 8
C267 2524	Stay:Grip:Drum:Left	35 - 31
C267 2525	Stay:Grip:Drum:Right	35 - 30
C267 2570	Bracket:Stopper:Turn	37 - 24
C267 2571	Shield:Holder:Ink Cartridge	35 - 9
C267 2572	Stopper:Turn	37 - 23
C267 2574	Slider:Housing	35 - 17
C267 2586	Dram Metal Screen:Drum:A4:Ass'y	37 - 20
C267 2598	Blade:Front:Drum	39 - 27
C267 2599	Blade:Rear:Drum	39 - 28
C267 2640	Holder:Ink Cartridge (-76/78/80/83/93)	35 - 15
C267 2641	Slider:Holder:Ink Cartridge:WLD	35 - 4
C267 2642	Guide:Slider:Left:WLD:Ass'y	35 - 3
C267 2675	Holder:Ink Cartridge:NA:STD:Ass'y (-61)	35 - 15
C267 2753	Stay:Paper Feed Tray:Front	19 - 33
C267 2754	Stay:Paper Feed Tray:Rear	19 - 24
C267 2756	Base:Paper Feed Tray	19 - 34
C267 2758	Plate:Magnet Catch:Paper Feed Tray	19 - 23
C267 2760	Arm:Front:Paper Feed Tray	19 - 36
C267 2761	Arm:Rear:Paper Feed Tray:Peen	19 - 35

Part No.	Description	Page and Index No.
C267 2770	Shaft:Lock:Side Fence	19 - 32
C267 2779	Spring:Auxiliary:Rise:Paper Feed Tray	19 - 2
C267 2781	Shaft:Rise:Paper Feed Tray	21 - 16
C267 2790	Rack:Rise:Paper Feed Tray:Front:Ass'y	19 - 6
C267 2793	Stay:Harness:Sensor:Paper	19 - 8
C267 2796	Rack:Rise:Paper Feed Tray:Rear:Ass'y	19 - 11
C267 2802	Roller:Paper Feed:Ass'y	21 - 4
C267 2806	Arm:Paper Feed	21 - 9
C267 2811	Pulley:Drive:Roller:Paper Feed	21 - 14
C267 2812	Pulley:Pickup:Paper Feed	21 - 13
C267 2813	Timing Belt:B82MXL6.4	21 - 12
C267 2816	Stopper:Arm	23 - 24
C267 2819	Separation Pad:Ass'y	21 - 27
C267 2820	Separation Pad:CHN:Ass'y	21 - 27
C267 2824	Drum Stay:Paper Feed:Ass'y	21 - 28
C267 2827	Adjusting Pin:Separation Sub-unit	21 - 17
C267 2844	Bracket:Separation Change	21 - 22
C267 2845	Lever:Separation Change	21 - 18
C267 2885	Tension Spring:Bracket:Stepper Motor	53 - 18
C267 2896	Guide Plate:Feed Roller:Ass'y	25 - 18
C267 2897	Sheet:Guide Plate:Feed Roller:Upper	25 - 24
C267 2916	Stay:Paper Feed	21 - 32
C267 2916	Stay:Paper Feed	23 - 23
C267 2917	Retainer:Arm:Paper Feed	21 - 5
C267 2918	Bracket:Stay:Paper Feed	23 - 16
C267 2924	Lever:Pressure:Paper Feed Roller	23 - 10
C267 2931	Arm:Pressure:Paper Feed:Peen	23 - 14
C267 2934	Knob:Lever	21 - 29
C267 2934	Knob:Lever	23 - 11
C267 2941	Actuator:Surface Of Paper Sensor:Peen	21 - 3
C267 2944	Screw:Actuator:Surface Of Paper Sensor	21 - 1
C267 2946	Bracket:Surface Of Paper Sensor	23 - 4
C267 2947	Holder:Surface Of Paper Sensor	23 - 5
C267 2951	Bracket:Arm:Surface Of Paper Sensor	23 - 17
C267 2952	Holder:Surface Of Paper Sensor	23 - 18

Part No.	Description	Page and Index No.
C267 2953	Cover:Inner Back:Stay:Paper Feed	23 - 6
C267 2954	Cover:Harness:Stay:Paper Feed	23 - 26
C267 2956	Cover:Auxiliary:Harness:Stay:Paper Feed	23 - 25
C267 2958	Ground Plate:Cover:Stay:Paper Feed	23 - 27
C267 2958	Ground Plate:Cover:Stay:Paper Feed	59 - 4
C267 2980	Side Fence:Paper Feed Tray	19 - 18
C267 2983	Spacer:Side Fence	19 - 28
C267 2992	Cover:On Off Detector:Plotter:Lower Middle	23 - 19
C267 2993	Bracket:On Off Detector:Right Lower: Machine Or Copier:2	23 - 20
C267 2994	Holder:Lock:Plotter	23 - 21
C267 2995	Decal:Paper Feed Pressure:English	23 - 22
C267 2995	Decal:Paper Feed Pressure:English	75 - 11
C267 2996	Decal:Paper Feed Pressure:CHN	75 - 11
C267 2996	Decal:Paper Feed Pressure:CHN	23 - 22
C267 2998	Decal:Size Indication:Paper Feed	75 - 12
C267 2998	Decal:Size Indication:Paper Feed	19 - 1
C267 3050	Pressure Roller:B4:Ass'y	33 - 16
C267 3052	Pressure Roller:A4/LG:Ass'y	33 - 16
C267 3130	DC Solenoid:Pressure Release:Left:Ass'y	33 - 25
C267 3134	DC Solenoid:Pressure Release:Right:Ass'y	33 - 12
C267 3452	Roller:Rail:Drum	35 - 24
C267 3452	Roller:Rail:Drum	47 - 24
C267 3473	Guide:Master Ejection	47 - 23
C267 3477	Bracket:Contact Point:Turn	45 - 7
C267 3485	Roller:Upper:Master Ejection Unit:Ass'y	47 - 8
C267 3501	Side Plate:Front:Master Ejection:Ass'y	47 - 3
C267 3521	Side Plate:Rear:Master Ejection:Ass'y	47 - 13
C267 3526	Bracket:Harness:Master Ejection Unit	45 - 9
C267 3530	Shaft:Lock:Master Ejection Unit:Ass'y	45 - 6
C267 3574	Stay:Master Ejection Unit	47 - 1
C267 3679	Bracket:Auxiliary:Master Ejection	45 - 3
C267 3680	Spring Plate:Guide:Master Ejection	45 - 5
C267 3682	Sheet:Case:Master Ejection	45 - 19

Part No.	Description	Page and Index No.
C267 3704	Bracket:Contact Point:Fix:	
	Master Ejection Unit	57 - 2
C267 3706	Bracket:On Off Detector:	
	Master Ejection Unit	51 - 14
C267 3713	Shaft:Contact Point:Master Ejection:Upper	57 - 3
C267 3714	Bracket:Contact Point:Fix:	
	Master Ejection Unit:Middle	57 - 1
C267 3716	Inner Cover:Open And Close	55 - 24
C267 3717	Supporter:Master Ejection Unit	57 - 13
C267 3730	Lever:Middle	51 - 8
C267 3731	Lever:Lower	51 - 7
C267 3732	Lever:Open And Close:Master Ejection Unit	51 - 2
C267 3733	Button:Master Ejection	51 - 1
C267 3736	Bracket:Spring:Master Ejection	51 - 5
C267 3737	Spring:Lever:Middle	51 - 26
C267 3738	Spring:Lever:Lower	51 - 6
C267 3881	Bracket:Drum Stay:Paper Exit Sub-unit:Front	57 - 14
C267 3882	Bracket:Drum Stay:Paper Exit Sub-unit:Rear	57 - 8
C267 3883	Bracket:Drum Stay:Exit:Lower Front	57 - 15
C267 3884	Bracket:Drum Stay:Exit:Lower Rear	57 - 9
C267 3888	Discharge Brush:Drum Stay:Exit:Lower	57 - 17
C267 4201	Paper Exit Sub-unit:Ass'y	43 - *
C267 4204	Paper Exit Sub-unit:CHN:Ass'y	43 - *
C267 4349	Spring:Arm:Pickoff Pawl	33 - 28
C267 4410	Bracket:End Plate:Ass'y	43 - 4
C267 4416	Case:End Plate:Exit	43 - 1
C267 4417	Cushion:End Fence	43 - 23
C267 4431	Remover/Install Sub-unit:Exit:Front:Peen	57 - 11
C267 4441	Remover/Install Sub-unit:Exit:Rear:Peen	57 - 10
C267 4464	Side Fence:Rear:Paper Exit Sub-unit	43 - 7
C267 4465	Side Fence:Front:Paper Exit Sub-unit	43 - 8
C267 4479	Bushing	33 - 30
C267 4480	Shaft:Pickoff Pawl:Ass'y	33 - 4
C267 4493	Guide:Paper:Side Fence	43 - 25
C267 4493	Guide:Paper:Side Fence	9 - 26

Part No.	Description	Page and Index No.
C267 4665	Bearing Case:Roller:Ink	39 - 4
C267 5202	Harness:Main Switch:Ass'y	51 - 9
C267 5230	Harness:Master Ejection Unit:Ass'y	45 - 14
C267 5231	Harness:Master Ejection:Sensor:Ass'y	57 - 7
C267 5240	Harness:Imaging Unit:Ass'y	31 - 12
C267 5241	Harness:Stepper Motor:Ass'y	31 - 22
C267 5242	Harness:Connecting:Plotter:1:Ass'y	27 - 20
C267 5242	Harness:Connecting:Plotter:1:Ass'y	59 - 14
C267 5251	Harness:Connecting:Pump:B4:Ass'y	39 - 3
C267 5252	Harness:Connecting:Drum:Ass'y	51 - 29
C267 5254	Harness:Connecting:Pump:A4/LG:Ass'y	39 - 3
C267 5257	Harness:Drum:Connecting:B4:Ass'y	35 - 22
C267 5258	Harness:Drum:Connecting:A4:Ass'y	35 - 22
C267 5259	Harness:Drum:Connecting:LG:Ass'y	35 - 22
C267 5260	Harness:Hale Unit:Ass'y	41 - 13
C267 5271	Harness:Paper Feed Tray:Ass'y	19 - 17
C267 5272	Harness:Stay:Ass'y	23 - 2
C267 5273	Harness:Connecting:Stay:Plotter:Ass'y	23 - 1
C267 5276	Harness:Paper Feed Tray:Sensor:Ass'y	49 - 2
C267 5280	Harness:Scanner:Motor:Ass'y	49 - 1
C267 5282	Harness:Scanner:Stabilizer	15 - 17
C267 5283	Harness:SBU:Ass'y	13 - 13
C267 5284	Harness:Scanner:Ass'y	13 - 17
C267 5292	Power Supply Cord:Stopper:NA:Ass'y	49 - 9
C267 5294	Power Supply Cord:Stopper:EU:Ass'y	49 - 9
C267 5299	Power Supply Cord:Stopper:CHN:Ass'y	49 - 9
C267 5612	Bracket:Sensor:Misfeed Removal	57 - 4
C267 5616	Bracket:Fix:Power Supply Unit	55 - 4
C267 5617	Bracket:Fix:Power Supply Unit:Upper	55 - 5
C267 5622	Bracket:Base:Fix	53 - 1
C267 5623	Bracket:Base:Guard	55 - 1
C267 5627	Bracket:Power Supply Unit	49 - 8
C267 5635	Spring Plate:Safety Switch	51 - 13
C267 5650	Bracket:Main Switch	51 - 10
C267 5652	Bracket:Key Counter	57 - 18

Part No.	Description	Page and Index No.
C267 5670	Bracket:Power Supply Cord	49 - 10
C267 5844	Stepper Motor:DIA42:Plotter:Ass'y	31 - 23
C267 5890	Brushless Motor:Main:DC24V	55 - 9
C267 6168	Washer:Slide:End Fence	19 - 31
C271 1330	Decal:Master Set Instructions:PS	75 - 4
C271 1330	Decal:Master Set Instructions:PS	9 - 16
C271 1451	Operation Panel:EXP:Ass'y	11 - *
C271 1460	Case:Operation Sub-unit	11 - 3
C271 1474	Keytop:Memory	11 - 6
C271 1481	Sheet:Operation Sub-unit:Left:English	11 - 2
C271 1485	Sheet:Operation Sub:Left:Chinese	11 - 2
C271 2808	Shaft:Paper Feed Roller	21 - 10
C271 2809	Shaft:Pickup	21 - 11
C271 4395	End Fence:Adhesion	43 - 26
C271 4400	End Fen	43 - 2
C271 5162	PCB:OPE	11 - 18
C271 8676	Wall Chart:A3:English	9 - 20
C271 8678	Wall Chart:A3:CHN	9 - 20
C272 2964	Adjusting Pin:Front Rear:Paper Feed Tray	19 - 25
C272 2973	Knob:Lock:Side Fence	19 - 26
C272 5887	Spacer:DC Fan Motor:Axial:MM119:24V	41 - 5
C274 1331	Decal:Master Set Instructions:Stopper Guide	75 - 9
C274 1331	Decal:Master Set Instructions:Stopper Guide	27 - 19
C274 2057	Display Sub-unit:Leading Edge:Master:Printing	31 - 7
C274 2504	Frame:Upper:Drum:Ass'y	35 - 29
C612 1800	Screw:Lens:Guide	19 - 39
C612 1801	Screw:M4x8	35 - 2
G020 5626	Push Switch	23 - 29
G020 5626	Push Switch	51 - 19
G570 2730	Slider - Scanner	15 - 18
H012 1181	Bushing - 6mm	29 - 7

Part No.	Description	Page and Index No.
N803 6701	Flash Memory Card - 4MB	77 - 2

Part No.	Description	Page and Index No.
AA00 1468	Decal:ENERGY-STAR	9 - 23
AA00 1468	Decal:ENERGY-STAR	75 - 14
AA00 1477	Decal:ENERGY-STAR	9 - 23
AA00 1477	Decal:ENERGY-STAR	75 - 14
AA14 3802	Screw:6x1.7	53 - 13
AG07 0514	Magnet Catch	27 - 13
AG07 0514	Magnet Catch	9 - 3
AW01 0109	Photo Reflection Sensor:PS117ED1	19 - 16
AW01 0109	Photo Reflection Sensor:PS117ED1	41 - 12
AW02 0141	Photointerruptor	23 - 3
AW02 0141	Photointerruptor	31 - 29
AW02 0141	Photointerruptor	33 - 9
AW02 0141	Photointerruptor	19 - 13
AW02 0141	Photointerruptor	45 - 8
AW02 0141	Photointerruptor	47 - 12
AW02 0141	Photointerruptor	53 - 21
AW02 0141	Photointerruptor	55 - 25
AW02 0141	Photointerruptor	57 - 5
AW02 0156	Photointerruptor:EE-SX4235A-P2	13 - 4
AX31 0049	Total Counter:7Fig:24V	51 - 24
AX64 0188	Fan Motor DC24V 1.68W	49 - 12
AX65 5800	DC Fan Motor:Axial:MM119:24V	41 - 11
GW02 0020	Photointerruptor:LG248NI1	13 - 6

Part No.	Description	Page and Index No.
0314 0040N	Pan Head Screw - M4x4	59 - 101
0314 0040N	Pan Head Screw - M4x4	55 - 107
0314 0040N	Pan Head Screw - M4x4	21 - 111
0314 0040N	Pan Head Screw - M4x4	19 - 111
0314 0040N	Pan Head Screw - M4x4	51 - 108
0314 0080Z	Philips Screw - 4x8	39 - 107
0315 0200N	Pan Head Screw:M5x20	55 - 101
0323 0100N	Screw M3x10	57 - 105
0352 0080P	Screw M2x8	31 - 108
0353 0040N	Screw - M3x4	31 - 102
0353 0040N	Screw - M3x4	9 - 104
0353 0040N	Screw - M3x4	27 - 103
0353 0040N	Screw - M3x4	45 - 106
0353 0050Z	Philips Truss Head Screw - M3x5	39 - 101
0353 0050Z	Philips Truss Head Screw - M3x5	35 - 104
0353 0060N	Bind Screw - M3x6	23 - 103
0353 0060N	Bind Screw - M3x6	47 - 103
0353 0060N	Bind Screw - M3x6	53 - 107
0353 0060N	Bind Screw - M3x6	51 - 103
0353 0060N	Bind Screw - M3x6	27 - 105
0353 0060N	Bind Screw - M3x6	45 - 111
0353 0060N	Bind Screw - M3x6	41 - 106
0353 0060N	Bind Screw - M3x6	33 - 113
0353 0080Z	Philips Trass Head Screw - M3x8	35 - 108
0353 0100Z	Bind Screw - M3x10	39 - 112
0353 0120N	Screw M3x12	21 - 101
0354 0040N	Screw-M4x4	33 - 107
0354 0040Z	Screw - M4x4	37 - 114
0354 0040Z	Screw - M4x4	35 - 109
0354 0060Z	Philips Truss Head Screw - M4x6	37 - 104
0354 0060Z	Philips Truss Head Screw - M4x6	39 - 113
0354 0080N	Screw:M4x8	53 - 102
0354 0350N	Screw M4x35	45 - 105
0354 0450N	Screw:M4x45	41 - 103
0360 3006P	Screw - M3x6	17 - 107

Part No.	Description	Page and Index No.
0450 3006N	Tapping Screw - M3x6	19 - 110
0450 3006N	Tapping Screw - M3x6	45 - 104
0450 3006N	Tapping Screw - M3x6	21 - 112
0450 3008N	Tapping Screw - M3x8	29 - 104
0450 3008N	Tapping Screw 3x8	45 - 103
0450 3008N	Tapping Screw - M3x8	19 - 109
0450 3008N	Tapping Screw - M3x8	43 - 101
0450 3008Z	Tapping Screw - M3x8	37 - 105
0450 3008Z	Tapping Screw - M3x8	39 - 109
0450 3012N	Tapping Screw:3x12	43 - 105
0450 4006N	Tapping Screw:4x6	35 - 107
0450 4008N	Tapping Screw - M4x8	43 - 102
0450 4008N	Tapping Screw - M4x8	41 - 102
0450 4008N	Tapping Screw - M4x8	19 - 108
0450 4010N	Tapping Screw:M4x10	9 - 102
0450 4025N	Tapping Screw:4x25	51 - 106
0451 3006N	Tapping Screw - 3x6	57 - 106
0451 3006N	Tapping Screw - 3x6	29 - 101
0451 3006N	Tapping Screw - 3x6	17 - 101
0451 3006N	Tapping Screw - 3x6	55 - 103
0451 3006N	Tapping Screw - 3x6	27 - 101
0451 3006N	Tapping Screw - 3x6	31 - 101
0451 3006N	Tapping Screw - 3x6	19 - 107
0451 3006N	Tapping Screw - 3x6	49 - 102
0451 3006N	Tapping Screw - 3x6	45 - 107
0451 3006N	Tapping Screw - 3x6	53 - 111
0451 3006N	Tapping Screw - 3x6	25 - 103
0451 3006N	Tapping Screw - 3x6	15 - 101
0451 3006N	Tapping Screw - 3x6	9 - 105
0451 3006N	Tapping Screw - 3x6	47 - 105
0451 3006N	Tapping Screw - 3x6	13 - 101
0451 3008N	Tapping Screw - M3x8	43 - 103
0451 3008N	Tapping Screw - M3x8	9 - 103
0451 3008N	Tapping Screw - M3x8	15 - 102
0451 3008N	Tapping Screw - M3x8	45 - 112

Part No.	Description	Page and Index No.
0451 3008N	Tapping Screw - M3x8	29 - 105
0451 4006N	Tapping Screw - 4x6	25 - 102
0451 4006N	Tapping Screw - 4x6	33 - 109
0451 4006N	Tapping Screw - 4x6	53 - 103
0451 4006N	Tapping Screw - 4x6	43 - 104
0451 4006N	Tapping Screw - 4x6	59 - 106
0451 4006N	Tapping Screw - 4x6	27 - 104
0451 4006N	Tapping Screw - 4x6	49 - 101
0451 4006N	Tapping Screw - 4x6	23 - 104
0451 4006N	Tapping Screw - 4x6	57 - 101
0451 4006N	Tapping Screw - 4x6	21 - 113
0451 4006N	Tapping Screw - 4x6	51 - 107
0451 4006N	Tapping Screw - 4x6	55 - 104
0451 4008N	Tapping Screw:4x8	33 - 112
0451 4008N	Tapping Screw:4x8	59 - 109
0451 4008N	Tapping Screw:4x8	21 - 114
0451 4008N	Tapping Screw:4x8	57 - 103
0451 4008N	Tapping Screw:4x8	41 - 101
0451 4008N	Tapping Screw:4x8	25 - 113
0451 4008N	Tapping Screw:4x8	9 - 101
0451 4008N	Tapping Screw:4x8	27 - 106
0451 4010N	Tapping Screw:4x10	23 - 102
0451 4010N	Tapping Screw:4x10	21 - 109
0452 3006N	Binding Self-tapping Screw:3x6	37 - 106
0452 3006N	Binding Self-tapping Screw:3x6	59 - 105
0452 3008N	Tapping Screw - M3x8	11 - 101
0453 3006N	Tapping Screw - M3x6	23 - 105
0453 3006N	Tapping Screw - M3x6	31 - 113
0453 3006N	Tapping Screw - M3x6	17 - 108
0453 3006N	Tapping Screw - M3x6	25 - 112
0454 3006Q	Tapping Screw - M3x6	17 - 102
0454 3006Q	Tapping Screw - M3x6	27 - 102
0454 3006Q	Tapping Screw - M3x6	21 - 108
0454 3006Q	Tapping Screw - M3x6	31 - 103
0454 3006Q	Tapping Screw - M3x6	45 - 101

Part No.	Description	Page and Index No.
0454 3006Q	Tapping Screw - M3x6	13 - 102
0454 3006Q	Tapping Screw - M3x6	23 - 101
0454 3006Q	Tapping Screw - M3x6	59 - 103
0454 3008Q	Tapping Screw:3x8	45 - 102
0454 4006Q	Tapping Screw:4x6	55 - 102
0454 4006Q	Tapping Screw:4x6	59 - 102
0454 4006Q	Tapping Screw:4x6	23 - 111
0454 4006Q	Tapping Screw:4x6	53 - 109
0454 4006Q	Tapping Screw:4x6	51 - 104
0574 0040E	Hexagon Headless Set Screw - M4x4	39 - 105
0574 0040E	Hexagon Headless Set Screw - M4x4	29 - 103
0574 0040E	Hexagon Headless Set Screw - M4x4	21 - 106
0574 0050E	Hexagon Headless Set Screw - M4x5	25 - 101
0574 0080E	Hexagon Headless Set Screw - M4x8	53 - 101
0584 0121N	Hexagonal Head Bolt:M4x12	33 - 102
0592 0040E	Hexagonal Set Screw:M2x4	37 - 116
0593 0040E	Hexagonal Set Screw:M3x4	33 - 106
0593 0060Z	Hexagon Bolt - M3x6	37 - 115
0593 0080E	Bolt - M3x8	33 - 101
0593 0100Z	Bolt M3x10	37 - 107
0594 0060Z	Hexagon Socket Bolt - M4x6	35 - 106
0594 0080N	Hexagonal Set Screw - M4x8	19 - 102
0594 0080N	Hexagonal Set Screw - M4x8	25 - 106
0594 0080Z	Bolt - M4x8	39 - 104
0594 0080Z	Bolt - M4x8	37 - 108
0624 0160E	Spring Pin - 4x16mm	21 - 107
0633 0140G	Parallel Pin - 3x14	41 - 105
0633 0160G	Parallel Pin - 3x16mm	21 - 105
0701 0030N	Washer DIA3	33 - 104
0701 0040N	Washer:DIA4	19 - 101
0701 0040N	Washer:DIA4	25 - 111
0701 0060N	Washer DIA6	25 - 110
0710 0040N	Hexagonal Nut:M4	33 - 103
0720 0020E	Retaining Ring - M2	37 - 101
0720 0030E	Retaining Ring - M3	21 - 102

Part No.	Description	Page and Index No.
0720 0030E	Retaining Ring - M3	31 - 104
0720 0040E	Retaining Ring - M4	31 - 105
0720 0040E	Retaining Ring - M4	53 - 106
0720 0040E	Retaining Ring - M4	19 - 105
0720 0040E	Retaining Ring - M4	55 - 105
0720 0040E	Retaining Ring - M4	35 - 103
0720 0040E	Retaining Ring - M4	21 - 110
0720 0040E	Retaining Ring - M4	47 - 102
0720 0040E	Retaining Ring - M4	25 - 108
0720 0040E	Retaining Ring - M4	29 - 102
0720 0040E	Retaining Ring - M4	23 - 109
0720 0040E	Retaining Ring - M4	33 - 111
0720 0050G	Retaining Ring - M5	39 - 108
0720 0060E	Retaining Ring - M6	35 - 101
0720 0060E	Retaining Ring - M6	17 - 106
0720 0060E	Retaining Ring - M6	19 - 104
0720 0060E	Retaining Ring - M6	33 - 110
0720 0060E	Retaining Ring - M6	55 - 106
0720 0060E	Retaining Ring - M6	41 - 104
0720 0070E	Retaining Ring - M7	21 - 104
0720 0080E	Retaining Ring - M8	25 - 109
0720 0080E	Retaining Ring - M8	21 - 103
0720 0080E	Retaining Ring - M8	33 - 108
0725 0160E	Retaining Ring C - M16	39 - 103
0740 3008	Ball Bearing - 8x22x7	25 - 104
0740 3010	Ball Bearing - 10x26x8mm	53 - 104
0741 3706	Ball Bearing - 6x10x3	25 - 107
0804 6091	Hexagonal Set Screw - M2x5	37 - 110
0805 3385	Bushing - 6mm	47 - 101
0805 3530	Bearing 8x22x7	17 - 105
0807 5049	Wave Washer - 8 mm	35 - 105
0807 7046	Washer - 10.5x20x0.2mm	53 - 105
0807 7114	Washer - 16x24x0.3mm	39 - 102
0807 7114	Washer - 16x24x0.3mm	37 - 109
0808 0021	Rubber Ring	37 - 111

Part No.	Description	Page and Index No.
0951 3006Z	Philips Screw With Flat Washer - M3	39 - 111
0951 3006Z	Philips Screw With Flat Washer - M3	37 - 112
0951 3008Z	Philips Screw With Flat Washer - M3	37 - 103
0951 3012N	Screw:Polished Round:M3x12	19 - 103
0951 3014N	Screw Polished Round M3x14	51 - 105
0951 3025N	Screw:Polished Round:M3x25	51 - 102
0951 4006Z	Philips Screw With Flat Washer - M4	39 - 106
0951 4020N	Screw - M4x20	59 - 107
0954 3006N	Screw - M3x6	49 - 103
0954 3008N	Screw - M3x8	47 - 104
0954 4006Z	Screw - M4x6	35 - 102
0954 4008N	Screw - M4x8	49 - 104
1100 1475	Test Pin:White	67 - 101
1101 0328	Test Pin:NO.4-LF	67 - 102
1102 3822	Connector - 20P	67 - 103
1102 4201	Connector - 2P	67 - 104
1102 4205	Connector:292132-6	67 - 105
1102 4684	Connector - 5566-06R-210	67 - 106
1102 5303	3.5:Connector:ST:4P	67 - 107
1102 5305	Connector	67 - 108
1102 7648	Connector	67 - 109
1102 7838	Connector - B6B	67 - 110
1102 8633	Connector:B6P-SHF-1AA(LF)(SN)	67 - 111
1102 8661	Connector - FCN-564P068-G/SC-4V	67 - 112
1102 8797	Connector:1-292215-4	23 - 110
1102 9110	Connector - 353297-6	67 - 113
1102 9114	Connector - 353297-1	67 - 114
1102 9115	Connector - 1-292207-4	67 - 115
1102 9118	Connector:1-353297-9	67 - 116
1102 9119	Connector:2-353297-0	67 - 117
1102 9122	Connector 2-292208-6	67 - 118
1102 9123	Connector 2-292208-8	67 - 119
1102 9124	Connector:3-353308-0	67 - 120
1102 9126	Connector:4-353308-0	67 - 121
1102 9316	Connector:B6P-VH-FB-B(LF)(SN)	67 - 122

Part No.	Description	Page and Index No.
1103 3178	Connector:FH12-50S-0.5SH(89)	67 - 123
1103 3770	Connector:5219-03A-201	67 - 124
1103 4777	Connector:00 6216 005 808+	67 - 125
1104 0588	Dip Socket - 28P	67 - 152
1105 0328	Harness Clamp - ES-0505	31 - 112
1105 0328	Harness Clamp - ES-0505	45 - 113
1105 0488	Harness Clamp	27 - 108
1105 0488	Harness Clamp	59 - 104
1105 0488	Harness Clamp	45 - 110
1105 0488	Harness Clamp	31 - 106
1105 0489	Harness Clamp - LWS 1316	53 - 112
1105 0489	Harness Clamp - LWS 1316	59 - 110
1105 0489	Harness Clamp - LWS 1316	55 - 113
1105 0490	Harness Clamp - IWS-2218	49 - 106
1105 0490	Harness Clamp - IWS-2218	55 - 112
1105 0508	Harness Clamp - LWS-0711	51 - 111
1105 0508	Harness Clamp - LWS-0711	33 - 105
1105 0508	Harness Clamp - LWS-0711	55 - 109
1105 0508	Harness Clamp - LWS-0711	45 - 109
1105 0508	Harness Clamp - LWS-0711	53 - 108
1105 0508	Harness Clamp - LWS-0711	47 - 106
1105 0508	Harness Clamp - LWS-0711	57 - 104
1105 0511	Harness Clamp - LWS-0306ZC	37 - 102
1105 0511	Harness Clamp - LWS-0306ZC	39 - 110
1105 0511	Harness Clamp - LWS-0306ZC	17 - 103
1105 0511	Harness Clamp - LWS-0306ZC	25 - 105
1105 0511	Harness Clamp - LWS-0306ZC	23 - 108
1105 0511	Harness Clamp - LWS-0306ZC	53 - 113
1105 0516	Clamp	55 - 110
1105 0516	Clamp	19 - 106
1105 0516	Clamp	23 - 107
1105 0518	Edge Saddle - LES-1010	45 - 108
1105 0518	Edge Saddle - LES-1010	51 - 109
1105 0518	Edge Saddle - LES-1010	49 - 105
1105 0521	Clamp - LES-1017	59 - 108

Part No.	Description	Page and Index No.
1105 0521	Clamp - LES-1017	27 - 107
1105 0521	Clamp - LES-1017	31 - 110
1105 0522	Edge Saddle - LES0510	23 - 106
1105 0522	Edge Saddle - LES0510	37 - 113
1105 0522	Edge Saddle - LES0510	51 - 112
1105 0522	Edge Saddle - LES0510	55 - 111
1105 0534	Clamp	27 - 109
1105 0534	Clamp	31 - 111
1105 0534	Clamp	57 - 102
1105 0534	Clamp	47 - 107
1105 0534	Clamp	55 - 108
1105 0534	Clamp	19 - 112
1105 0534	Clamp	53 - 110
1105 0534	Clamp	51 - 110
1106 0851	Bush:NJ-16	31 - 109
1107 0392	Fuse - 6.3A 125V	49 - 107
1107 0393	Fuse (Glass Case) - 8A - 125V	49 - 108
1107 1067	Fuse:ET-6.3A	49 - 109
1109 0044	Fuse:MINISMDC200	67 - 126
1204 2521	Micro Switch	51 - 101
1204 2760	Dip Switch:CHS-01B	67 - 127
1206 0124	Lithium Cell:CR2032VO4H/Z	67 - 128
1400 0455	Transistor - 2SC2873Y	67 - 129
1400 0620	Transistor:2SC1740S	67 - 130
1400 0909	Transistor - DTA143EUA	67 - 131
1400 0920	Transistor - DTC143EUA	67 - 132
1400 1286	Transistor:RT1N430M-T111	67 - 133
1401 1200	FET:2SJ533-E	67 - 134
1401 1414	FET:SI3433BDV-E3	67 - 135
1401 1555	FET:2SK2897-01MR	67 - 136
1402 0804	Silicon Diode - 45V - 0.3A	67 - 137
1402 1265	Diode - RB411D	67 - 138
1402 1336	Diode:1SS355	67 - 139
1402 1342	Diode - 1SR154-400	67 - 140
1402 1806	Diode:KDS121/P	67 - 141

Part No.	Description	Page and Index No.
1402 2039	Diode:RSX301LA-30	67 - 142
1403 0978	LED:SML-310DT	67 - 143
1403 0996	LED:SML-310VT	67 - 144
1403 1412	LED:SML-310PT	67 - 145
1407 1535	Driver:TD62308APG(5)	67 - 146
1407 2187	TTLIC:SN74LS07NS	67 - 147
1407 4973	CMOS Logic SN74CBT3384APW	67 - 148
1407 5285	CMOS Logic - 74VHCT32 TSSOP	67 - 149
1407 5454	IC - SN74LV86APW	67 - 150
1407 5567	IC:SN74LVCC3245APW	67 - 151
1407 5856	RAM:FM18L08-70-PG	49 - 110
1407 6047	CMOS Logic:TC74VHC74FT(K)	67 - 153
1407 6050	CMOS Logic:TC74VHC08FT(K)	67 - 154
1407 6051	CMOS Logic:TC74VHC125FT(K)	67 - 155
1407 6052	CMOS Logic:TC74VHC14FT(K)	67 - 156
1407 6053	CMOS Logic:TC74VHC32FT(K)	67 - 157
1407 6390	IC - STK672-400	67 - 158
1407 6731	PLD:EP2C8F256C8N(0.09)	67 - 159
1407 6803	CMOS Logic:TC7SZ07FU	67 - 160
1407 6805	CMOS Logic:TC7SH126FU	67 - 161
1407 6812	CMOS Logic:TC7WZ74FK	67 - 162
1407 6826	CPU:HD64F2364VTE34V	67 - 163
1407 6847	Motor Control IC:STK672-600B-E	67 - 164
1407 6904	CMOS Logic:TC74LCX07FT(K)	67 - 165
1407 6951	CMOS Logic:TC7MBL3245SFK	67 - 166
1407 6991	CMOS Logic:TC74VHC138FT(K)	67 - 167
1407 6993	CMOS Logic:TC74VHC157FT(K)	67 - 168
1407 6995	CMOS Logic:TC74VHC244FT(K)	67 - 169
1407 7002	CMOS Logic:TC74VHCT00AFT(K)	67 - 170
1407 7003	CMOS Logic:TC74VHCT04AFT(K)	67 - 171
1407 7004	CMOS Logic:TC74VHCT08AFT(K)	67 - 172
1407 7005	CMOS Logic:TC74VHCT244AFT(K)	67 - 173
1407 7168	Motor Control IC:BD63893EFV	67 - 174
1407 7190	Controller:RB5V871A	67 - 175
1407 7203	Motor Control IC:STK672-640A-E	67 - 176

Part No.	Description	Page and Index No.
1407 7314	Real Time Clock:R2043T-F	67 - 177
1408 0182	IC - TA78L010AP	67 - 178
1408 0346	IC-BA10358F	67 - 179
1408 0398	Comparator - NJM2903M	67 - 180
1408 0827	IC - TA8429H	67 - 181
1408 1204	IC - TA8083P	67 - 182
1408 1830	Series Regulator:AIC1085-33PMJ	67 - 183
1408 1849	Operational Amplifier:NJM2716F	67 - 184
1408 2088	IC:LTC3701EGN#TRPBF	67 - 185
1408 2130	OPERATIONAL AMPLIFIER:NJM2730F	67 - 186
1408 2141	IC:R3112N461A-F	67 - 187
1408 2515	IC:R3112N291A-F	67 - 188
1408 2540	Series Regulator:KIA7812API/P	67 - 189
1408 2542	Series Regulator:KIA7818API/P	67 - 190
1408 2883	Series Regulator:RP131H121D-F	67 - 191
1503 0758	Crystal Oscilator:MC-306 32.768KHz 12.5PF	67 - 192
1503 1213	Crystal Oscilator - 9.8304MHz	67 - 193
1503 1254	Crystal Oscilator 14.7456MHz	67 - 194
1600 1682	Resistor - 680 Ω ±5% 2W	67 - 195
1600 1946	Resistor:33M Ω:±1%:1W	67 - 196
1601 7877	Resistor Array 4.7K Ω ±5% 1/32W	67 - 197
1601 7886	Resistor Array 3.3K Ω ±5% 1/32W	67 - 198
1601 7887	Resistor Array:10K Ω:±5%:1/16W:4Number	67 - 199
1601 7898	Resistor Array:33 Ω:±5%:1/16W:4Number	67 - 200
1601 7943	Resistor Array:68 Ω:±5%:1/16W:4Number	67 - 201
1601 8570	Resistor:100K Ω:±10%:1/2W	67 - 202
1601 8574	Resistor:20KΩ:±10%:1/2W	67 - 203
1604 4672	Capacitor:100μF:±20%:50V	67 - 204
1604 4894	Capacitor:100μF:±20%:16V	67 - 205
1604 5632	Capacitor:10μF:±20%:50V	67 - 206
1604 5697	Capacitor:330μF:±20%:50V	67 - 207
1604 5777	Capacitor:220μF:±20%:10V	67 - 208
1605 0744	Capacitor - EMK212F105Z	67 - 209
1605 1137	Capacitor - 470pF ±10% 50V	67 - 210
1605 1148	Capacitor:0.1μF:+80-20%:50V	67 - 211

Part No.	Description	Page and Index No.
1605 1201	Capacitor - 12pF ±5% 50V	67 - 212
1605 1202	Capacitor:15pF:±5%:50V	67 - 213
1605 1204	Capacitor:22pF:±5%:50V	67 - 214
1605 1206	Capacitor:47pF:±5%:50V	67 - 215
1605 1208	Capacitor:100pF:±5%:50V	67 - 216
1605 1221	Capacitor:0.1μF:+80-20%:16V	67 - 217
1605 1225	Capacitor:0.1μF:±10%:50V	67 - 218
1605 1295	Capacitor:10μF:+80-20%:10V	67 - 219
1605 1306	Capacitor:1μF:±10%:10V	67 - 220
1605 1307	Capacitor - 2.2μF +80-20% 11V	67 - 221
1605 1353	Capacitor:0.1μF:±10%:25V	67 - 222
1605 1354	Capacitor:1200pF:±5%:50V	67 - 223
1605 1358	Capacitor:10μF:±10%:10V	67 - 224
1605 1376	Capacitor - 0.033μF - ±10%:25V	67 - 225
1605 1396	Capacitor:0.33μF:±10%:50V	67 - 226
1605 1406	Capacitor:10μF:±10%:6.3V	67 - 227
1607 0807	Filter - BK1608HS601	67 - 228
1607 0807	Filter - BK1608HS601	67 - 229
1607 0815	BLM41P600SPB	67 - 230
1607 0870	Filter - BK1608HS121	67 - 231
1607 0871	Filter BK1608HM121	67 - 232
1607 1016	Filter Array - MZA3216R301A	67 - 233
1607 1108	Filter:BLM21PG220SN1B	67 - 234
1607 1303	Ferrite Core - F5FF	13 - 103
1607 1567	Filter:MPZ2012S101A	67 - 235
1607 1675	Filter BK1608LM182	67 - 236
1607 1827	Inductor:RLF7030-2R2M5R4	67 - 237
1607 1898	Filter:BK1608LL431	67 - 238
1607 2031	Ferrite Core:K1 NF-75(N)BK2	49 - 112
1607 2074	Ferrite Core:K1 NFR-08-ABK0	49 - 111
1607 2074	Ferrite Core:K1 NFR-08-ABK0	11 - 102
1607 2075	Ferrite Core:K1 NF-135-(N)BK0	31 - 107
1607 2076	Ferrite Core:K1 NF-30-A(N)BK0	49 - 113
1610 1203	Resistor - 100 Ω ±5% 1W	67 - 239
1610 1220	Resistor - 120 Ω ±5% 1W	67 - 240

Part No.	Description	Page and Index No.
1610 1607	Chip Resistor:0.1Ω:±1%:1W:6332	67 - 241
1610 1848	Resistor:160 Ω:±5%:1W:6332	67 - 242
1634 0000	Resistor:0Ω:1608	67 - 243
1650 3221	Resistor - 220Ω±5%1/8W	67 - 244
1650 4100	Resistor:10 Ω:±5%:1/10W:1608	67 - 245
1650 4101	Resistor:100 Ω:±5%:1/10W:1608	67 - 246
1650 4102	Resistor:1K Ω:±5%:1/10W:1608	67 - 247
1650 4103	Resistor:10K Ω:±5%:1/10W:1608	67 - 248
1650 4104	Resistor:100K Ω:±5%:1/10W:1608	67 - 249
1650 4151	Resistor:150 Ω:±5%:1/10W:1608	67 - 250
1650 4152	Resistor:1.5K Ω:±5%:1/10W:1608	67 - 251
1650 4163	Resistor:16K Ω:±5%:1/10W:1608	67 - 252
1650 4201	Resistor - 200Ω±5%1/10W	67 - 253
1650 4202	Resistor - 2KΩ±5%1/10W	67 - 254
1650 4203	Resistor - 20KΩ ±5% 1/10W	67 - 255
1650 4204	Resistor - 200KΩ±5%1/10W	67 - 256
1650 4222	Resistor - 2.2KΩ±5%1/10W	67 - 257
1650 4241	Chip Resistor:240KΩ:±5%:1/10W	67 - 258
1650 4243	Resistor:24K Ω:±5%:1/10W:1608	67 - 259
1650 4303	Resistor:30K Ω:±5%:1/10W:1608	67 - 260
1650 4330	Resistor:33 Ω:±5%:1/10W:1608	67 - 261
1650 4332	Resistor:3.3K Ω:±5%:1/10W:1608	67 - 262
1650 4391	Resistor - 390Ω ±5% 1/10W	67 - 263
1650 4470	Resistor - 47Ω±5%1/10W	67 - 264
1650 4472	Resistor:4.7K Ω:±5%:1/10W:1608	67 - 265
1650 4473	Resistor - 47K Ω±5%1/10W	67 - 266
1650 4680	Resistor:68 Ω:±5%:1/10W:1608	67 - 267
1650 4683	Resistor - 68K Ω ±5% 1/10W	67 - 268
1650 4824	Resistor:820KΩ:±5%:1/10W:1608	67 - 269
1650 5102	Resistor:1K Ω:±5%:1/16W:1005	67 - 270
1650 5103	Resistor:10K Ω:±5%:1/16W:1005	67 - 271
1650 5330	Resistor:33 Ω:±5%:1/16W:1005	67 - 272
1650 5470	Chip Resistor 47Ω ±5% 1/16W	67 - 273
1650 5511	Resistor:510 Ω:±5%:1/16W:1005	67 - 274
1654 1001	Resistor - 1KΩ±1%1/10W	67 - 275

Part No.	Description	Page and Index No.
1654 1152	Resistor:11.5K Ω:±1%:1/10W:1608	67 - 276
1654 1201	Resistor:1.2K Ω:±1%:1/10W:1608	67 - 277
1654 1401	Resistor - 1.4K Ω ±1% 1/10W 1608	67 - 278
1654 1500	Resistor - 150Ω±1 %1/10W	67 - 279
1654 1504	Resistor:1.5MΩ:±1%:1/16W 1608	67 - 280
1654 1691	Chip Resistor 1.69K Ω ±1% 1/10W	67 - 281
1654 2371	Resistor:2.37K Ω:±1%:1/10W:1608	67 - 282
1654 2400	Resistor:240 Ω:±1%:1/10W:1608	67 - 283
1654 2670	Resistor:267 Ω:±1%:1/10W:1608	67 - 284
1654 2701	Resistor - 2.7KΩ±1% 1/10W	67 - 285
1654 3000	Chip Resistor:300Ω:±1%:1/10W	67 - 286
1654 3002	Resistor:30K Ω:±1%:1/10W:1608	67 - 287
1654 3301	Resistor:3.3K Ω:±1%:1/10W:1608	67 - 288
1654 3401	Chip Resistor:3.4KΩ:±1%:1/10W:1608	67 - 289
1654 3572	Resistor:35.7K Ω:±1%:1/10W:1608	67 - 290
1654 4222	Resistor:42.2K Ω:±1%:1/10W:1608	67 - 291
1654 4991	Resistor:4.99K Ω:±1%:1/10W:1608	67 - 292
1654 5901	Resistor:5.9K Ω:±1%:1/10W:1608	67 - 293
1654 7872	Resistor:78.7K Ω:±1%:1/10W:1608	67 - 294
1655 0000	Resistor:0 Ω:1005	67 - 295
1655 1000	Resistor:100 Ω:±1%:1/16W:1005	67 - 296
1655 1004	Resistor:1M Ω:±1%:1/16W:1005	67 - 297
1655 1071	Resistor:1.07K Ω:±1%:1/16W:1005	67 - 298
1660 0100	Capacitor:10PF:±0.5PF:50V	67 - 299
1660 2101	Capacitor - 100pF - ±10% - 50V	67 - 300
1660 2220	Capacitor - 22pF ±20% 35V	67 - 301
1660 2330	Capacitor - 33pF - ±5% - 50V	67 - 302
1660 2331	Capacitor:330pF:±5%:50V	67 - 303
1660 2470	Capacitor:47pF:±5%:50V	67 - 304
1660 2471	Capacitor - 470pF - ±5% - 50V	67 - 305
1660 4102	Capacitor - 1000pF ±10% 50V	67 - 306
1660 4103	Capacitor - 10000pF - ±10% - 50V	67 - 307
1660 4332	Capacitor:3300pF:±10%:50V	67 - 308
1660 8104	Capacitor:0.1μF:+80-20%:25V	67 - 309
1902 0070	SRAM - 1M:X8:3.3V:G2	67 - 310

Part No.	Description	Page and Index No.
1906 0143	Flash ROM:16M:X8X16:Bottom:TSOP	67 - 311
1907 0012	SDRAM - 128M 2Mx16x4 133MHz	67 - 312
2803 0006	Cord Binder	9 - 14

Part No.	Description	Page and Index No.
5053 0447	Bushing - 6mm	53 - 10
5316 7421	O - Ring	39 - 30
5442 1924	Exposure Glass Cushion	13 - 15
5447 2681	Snap Ring	59 - 11
5501 8195	Steel Ball 3/16	21 - 20
5501 8195	Steel Ball 3/16	23 - 12
5506 6111	Stepped Screw - M4	33 - 22
5606 2066	Paper Feed Guide Disc	21 - 6
5606 2310	Roller	19 - 9