Priport
Model EM-D2
(C280)

PARTS CATALOG

First edition, March 2013

Ricoh Company, LTD.

Priport Model EM-D2 (C280)

PARTS CATALOG

This catalog gives the numbers and names of parts on this machine.

1. Exterior 1 2
2. Exterior 2 4
3. Operation Panel 6
4. Frame Section 1 8
5. Frame Section 2 10
6. Frame Section 3 12
7. Drive Section 1 14
8. Drive Section 2 16
9. Drive Section 3 18
10. Drive Section 4 20
11. Paper Feed Section 1 22
12. Paper Feed Section 2 24
13. Paper Feed Section 3 26
14. Paper Feed Section 4 28
15. Paper Feed Section 5 30
16. Paper Feed Section 6 32
17. Pressure Cylinder 1 34
18. Pressure Cylinder 2 36
19. Pressure Cylinder 3 38
20. Paper Exit Section 1 40
21. Paper Exit Section 2 42
22. Paper Exit Section 3 44
23. Drum Unit 1 46
24. Drum Unit 2 48
25. Drum Unit 3 50
26. Drum Unit 4 52
27. Drum Unit 5 54
28. Scanner Unit 1 56
29. Scanner Unit 2 58
30. Scanner Unit 3 60
31. Plotter Unit 1 62
32. Plotter Unit 2 64
33. Plotter Unit 3 66
34. Plotter Unit 4 68
35. Plotter Unit 5 70
36. Plotter Unit 6 72
37. Master Eject 1 74
38. Master Eject 2 76
39. Master Eject 3 78
40. Paper Delivery Table 80
41. Electrical Section 1 82
42. Electrical Section 2 84
43. Controller Board 86
44. Decals and Documents 88
PARTS INDEX 90

March 19, 2013

1.Exterior 1

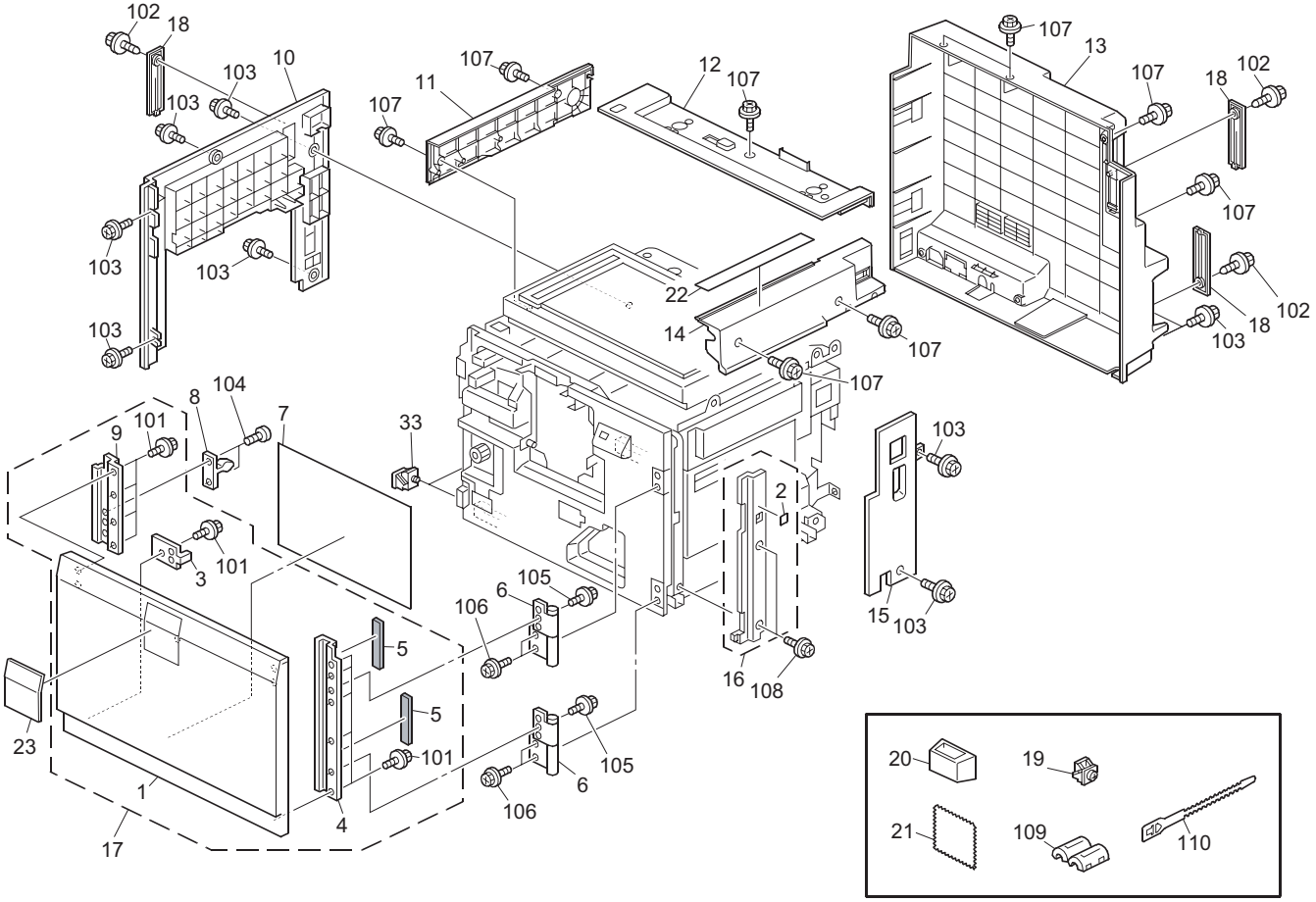
102
18
103
10
103
103
103
103
107
11
107
12
107
107
13
107
18
102
107
22
14
107
107
102
18
103
104
8
101
9
7
33
103
2
101
3
105
6
106
5
15
103
16
108
5
101
105
6
106
23
1
4
17
20
19
21
109
110

1.Exterior 1

Index No.	Part No.	Description	Q'ty Per Assembly
1	C280 1255	COVER:DOOR	1
2	C279 1330	DECAL:FALL:PAPER FEED TRAY	1
3	C244 1264	SAFETY SWITCH BRACKET	1
4	C244 1258	DOOR SUPPORT PLATE	1
5	C244 1254	CUSHION - FRONT DOOR	2
6	C262 1260	HINGE:DOOR:ASS'Y	2
7	C262 1350	SHEET:OPERATION INSTRUCTIONS	1
8	A659 1272	DOOR CATCH	1
9	C244 1259	DOOR CATCH BRACKET	1
10	C280 1275	COVER:LEFT	1
11	C280 1264	COVER:SCANNER:LEFT	1
12	C279 1329	COVER:SCANNER:REAR	1
13	C280 1384	COVER:REAR	1
14	C280 1263	COVER:SCANNER:RIGHT	1
15	C280 1270	COVER:RIGHT REAR	1
16	C280 1266	COVER:RIGHT FRONT:ASS'Y	1
17	C280 1250	COVER:DOOR:ASS'Y	1
18	C280 1277	CAP:COVER:LEFT	3
19	C262 1070	STOPPER:GRIP:ASS'Y	4
20	D144 1396	HOLDER:EXPOSURE GLASS:IG:ASS'Y	1
21	B065 1374	CLOTH - DF EXPOSURE GLASS	1
22	C280 1333	DECAL:MASTER SET INSTRUCTIONS	1
23	C280 1335	PANEL:LOGO:DD6650P	1

Index No.	Part No.	Description	Q'ty Per Assembly
101	0450 4008N	TAPPING SCREW - M4X8	
102	0450 3010N	TAPPING SCREW - M3X10	
103	0451 4008N	TAPPING SCREW:4X8	
104	0453 3006N	TAPPING SCREW - M3X6	
105	0451 4008N	TAPPING SCREW:4X8	
106	0451 4010N	TAPPING SCREW:4X10	
107	0451 3008N	TAPPING SCREW - M3X8	
108	0451 4006N	TAPPING SCREW - 4X6	
109	1607 1859	FERRITE CORE:E04SR241336A	
110	2803 0006	CORD BINDER	

2.Exterior 2

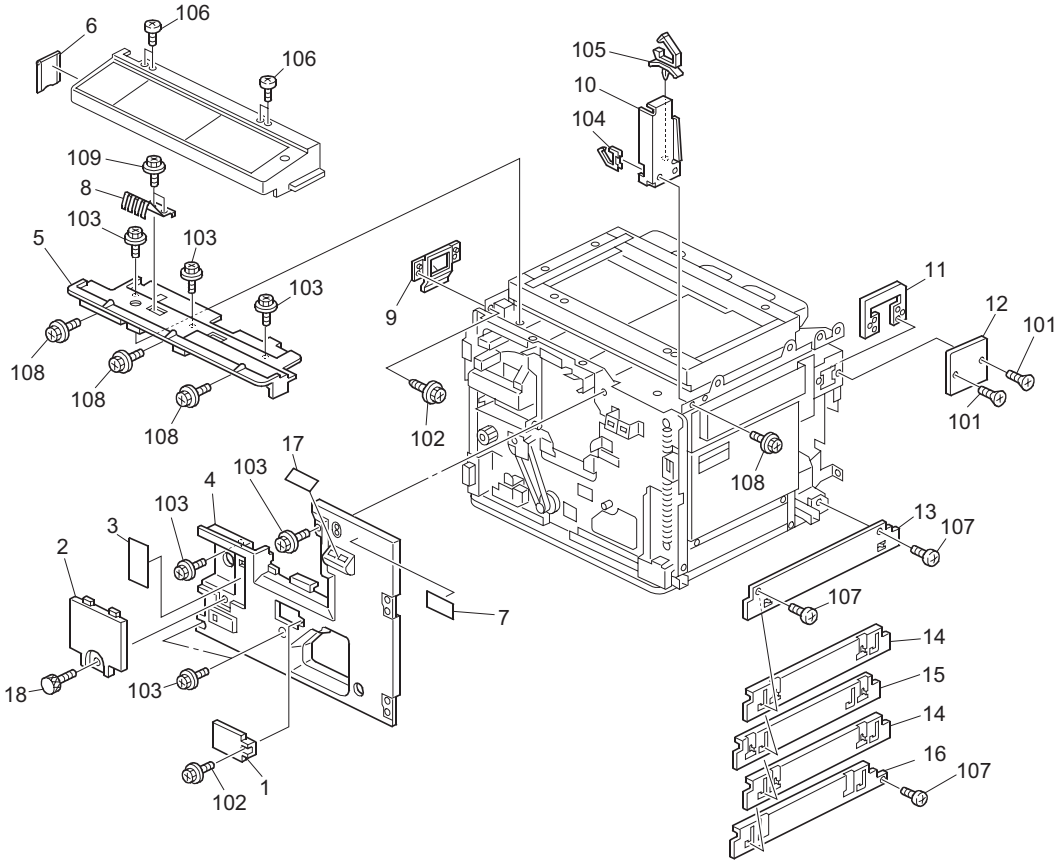
6
106
106
105
10
104
109
8
103
5
103
103
9
11
12
101
108
108
108
102
101
108
17
4
103
103
3
2
13
107
107
7
14
15
14
16
107
18
103
102
1

2.Exterior 2

Index No.	Part No.	Description	Q'ty Per Assembly
1	C262 1286	CAP:PRESS DRAM:SMALL	1
2	C280 1298	CAP:KNOB:PRESS DRAM:CLEANING	1
3	C239 1356	DECAL- CYLINDER OPERATION	1
4	C262 1299	INNER COVER	1
5	C280 1265	COVER:PANEL:LOWER	1
6	C280 1371	COVER:MAIN SWITCH	1
7	C233 1290	DECAL - CAPTION LED	1
8	C280 1135	SPRING PLATE:OPERATION PANEL	1
9	C280 1365	COVER:MAIN SWITCH:PRINTING:ASS'Y	1
10	C280 1261	BRACKET:OPERATION PANEL:PROTECT:RIGHT	1
11	C238 1339	KEY COUNTER PLATE NUT	1
12	C280 1355	COVER:KEY COUNTER	1
13	C280 2782	SHIELDING PLATE:PAPER TRAY:UPPER:FIX	1
14	C244 2764	LOWER SHIELD PLATE A	2
15	C244 2765	LOWER SHIELD PLATE B	1
16	C244 2763	LOWER SHIELD PLATE	1
17	C262 1357	SHEET:COUNTER	1
18	C259 7052	KNOB SCREW:M4X10	1

Index No.	Part No.	Description	Q'ty Per Assembly
101	0323 0100N	SCREW M3X10	
102	0450 3008N	TAPPING SCREW - M3X8	
103	0451 4008N	TAPPING SCREW:4X8	
104	1105 0723	CLAMPS:WES-0507	
105	1105 0516	CLAMP	
106	0353 0040N	SCREW - M3X4	
107	0453 4006N	BINDING SELF TAPPING SCREW:4X6	
108	0451 3008N	TAPPING SCREW - M3X8	

3.Operation Panel

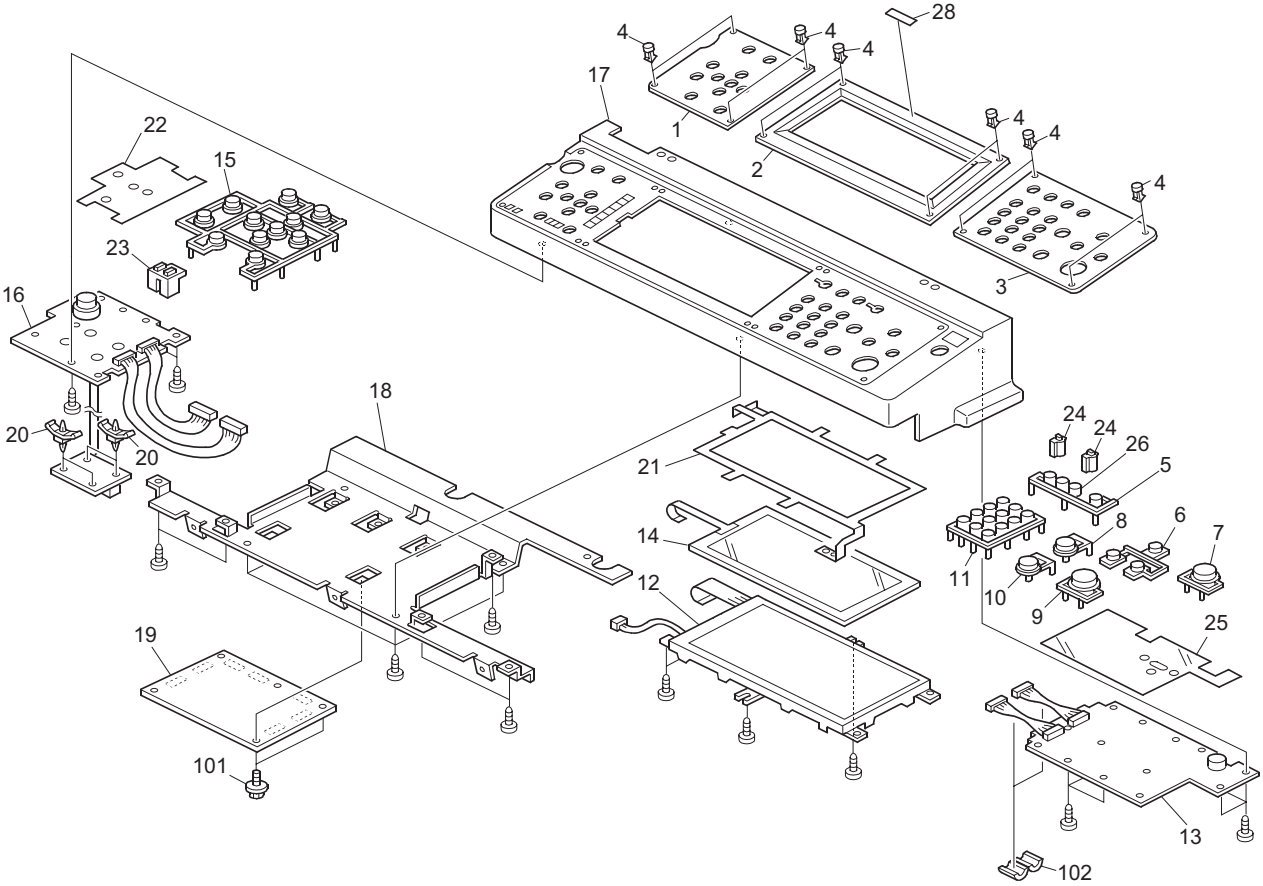

3.Operation Panel

Index No.	Part No.	Description	Q'ty Per Assembly
1	C280 1473	DESIGN PLATE:CLEAR:PANEL:MIDDLE:D2	1
2	C280 1471	DESIGN PLATE:CLEAR:PANEL:RIGHT	1
3	C280 1489	PIN:PANEL:EM-D2	12
4	C280 1470	CASE:OPERATION PANEL	1
5	C280 1487	KEYTOP:PROGRAM	1
6	C262 1485	KEYTOP:CONTENUANCE	1
7	C280 1480	KEYTOP:POWER SOURCE	1
8	C280 1483	KEYTOP:TRY PRINT	1
9	C280 1482	KEYTOP:START	1
10	C280 1481	KEYTOP:STOP	1
11	C280 1484	KEYTOP:10KEY	1
12	B213 5225	LCD:HVGA:SH:BL	1
13	C269 5168	PCB:OPERATION SUB-UNIT:RIGHT	1
14	H310 6173	TOUCH PANEL:HVGA:FU-ACF	1
15	C280 1490	KEYTOP:LEFT	1
16	C280 5169	PCB:OPERATION SUB-UNIT:LEFT	1
17	C280 1494	DESIGN PLATE:CLEAR:PANEL:LEFT	1
18	C262 1520	BRACKET:LCDC	1
19	C280 5164	PCB:LCDC:NA:ASS'Y	1
19	C280 5166	PCB:LCDC:EU:ASS'Y	1
20	C262 1499	NYLON CLAMP	4
21	C262 1521	COVER:LCDC	1
22	C262 1495	SHEET:PREVENTFENCE:LEFT	1
23	C269 1498	LENS:LED:LOWER	1
24	C262 1497	LENS:LED:UPPER	2
25	C262 1496	SHEET:PREVENTFENCE:RIGHT	1
26	C280 5622	GASKET:STGZ2-21:L60	1
27	C280 5635	SHADEING PLATE:OPERATION PANEL:CAT'S	1
28	C280 5220	HARNESS:OPERATION PANEL: CONNECTING:ASS'Y	1
29	D120 1551	SHEET:LOGO	1

Index No.	Part No.	Description	Q'ty Per Assembly
101	0451 3006N	TAPPING SCREW - 3X6	
102	1105 0516	CLAMP	
103	1607 1713	FERRITE CORE:ZCAT1730-0730A	

4.Frame Section 1

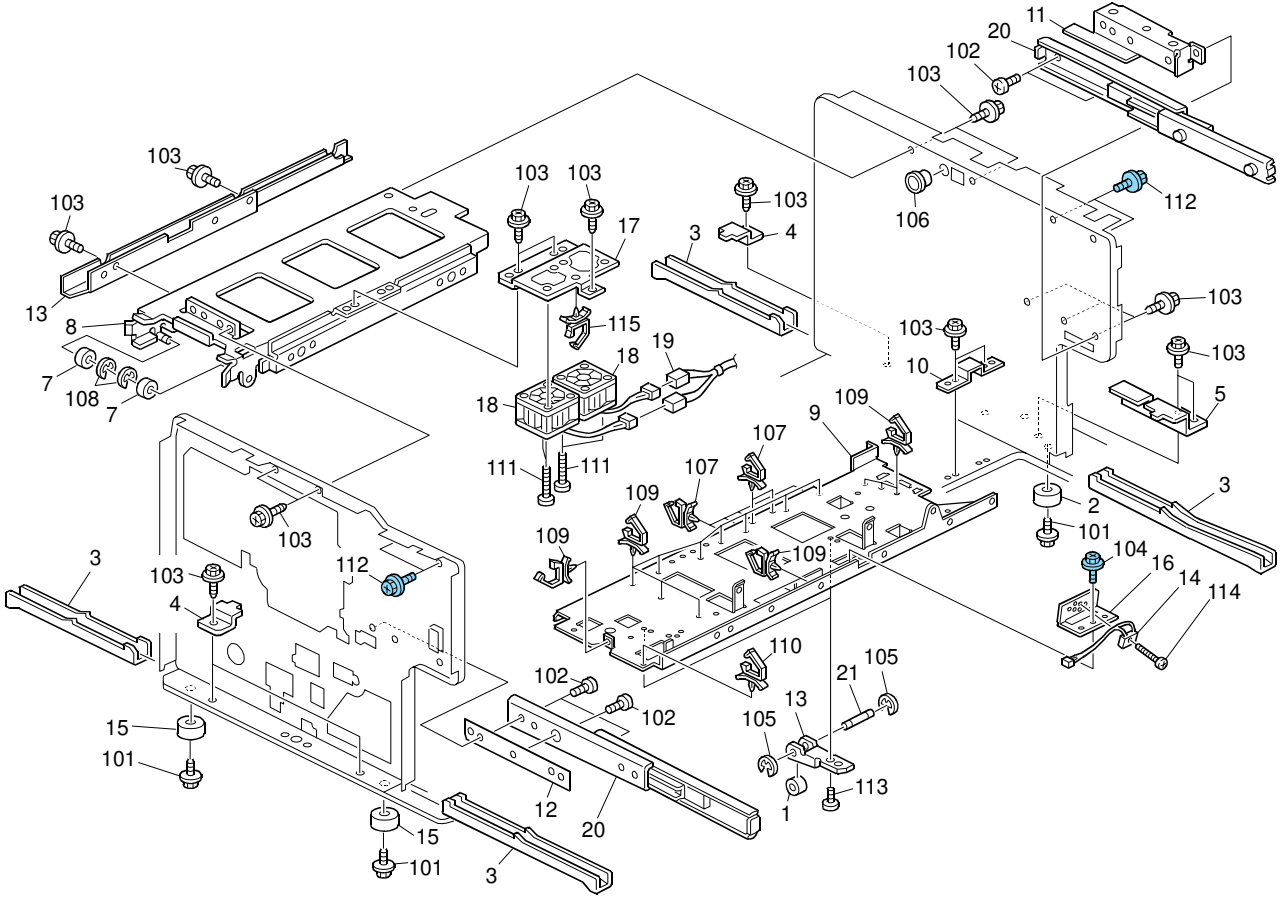

4.Frame Section 1

Index No.	Part No.	Description	Q'ty Per Assembly
1	C229 2281	MASTER TENSION ROLLER	1
2	C229 1096	STAND M28	2
3	C262 1078	GRIP:MACHINE OR COPIER	4
4	C262 1077	BRACKET:GUIDE:GRIP	3
5	C262 1076	COVER:GRIP:REAR RIGHT	1
7	C229 2615	SLIDE RAIL ROLLER	2
8	C244 2611	RAIL:MACHINE OR COPIER:WELDING	1
9	C280 1079	STAY:SCANNER:RIGHT:ASS'Y	1
10	C262 1062	STOPPER:ADJUSTING SCREW	2
11	C244 2277	BRACKET:SLIDE RAIL:REAR:PLOTTER	1
12	C239 2276	PLOTTER FRONT SLIDE RAIL SPACER	1
13	C257 1183	UPPER BASE BRACKET	1
14	C280 5851	OPTICS SENSOR:MASTER	1
15	C262 1063	STAND:FRONT:DIA28	2
16	C280 1069	BRACKET:OPTICS SENSOR:MASTER	1
17	C257 1180	FAN BRACKET	1
18	C257 5826	AIR KNIFE DC MOTOR: 24V 5.3W	2
19	C280 5202	HARNESS:DC FAN MOTOR:CONNECTING:ASS'Y	1
20	C262 2280	SLIDE RAIL:PLOTTER	2
21	C257 1184	UPPER BASE SHAFT	1

Index No.	Part No.	Description	Q'ty Per Assembly
101	0451 4010N	TAPPING SCREW:4X10	
102	0453 4006N	BINDING SELF TAPPING SCREW:4X6	
103	0451 4006N	TAPPING SCREW - 4X6	
104	0454 3006Q	TAPPING SCREW - M3X6	
105	0720 0030E	RETAINING RING - M3	
106	1106 0167	BUSHING - 11MM	
107	1105 0511	HARNESS CLAMP - LWS-0306ZC	
108	0720 0040E	RETAINING RING - M4	
109	1105 0516	CLAMP	
110	1105 0508	HARNESS CLAMP - LWS-0711	
111	0353 0350N	SCREW M3X35	
112	0454 4006Q	TAPPING SCREW:4X6	
113	0353 0040N	SCREW - M3X4	
114	0352 0080N	SCREW:M2X8	
115	1105 0534	CLAMP	

5.Frame Section 2

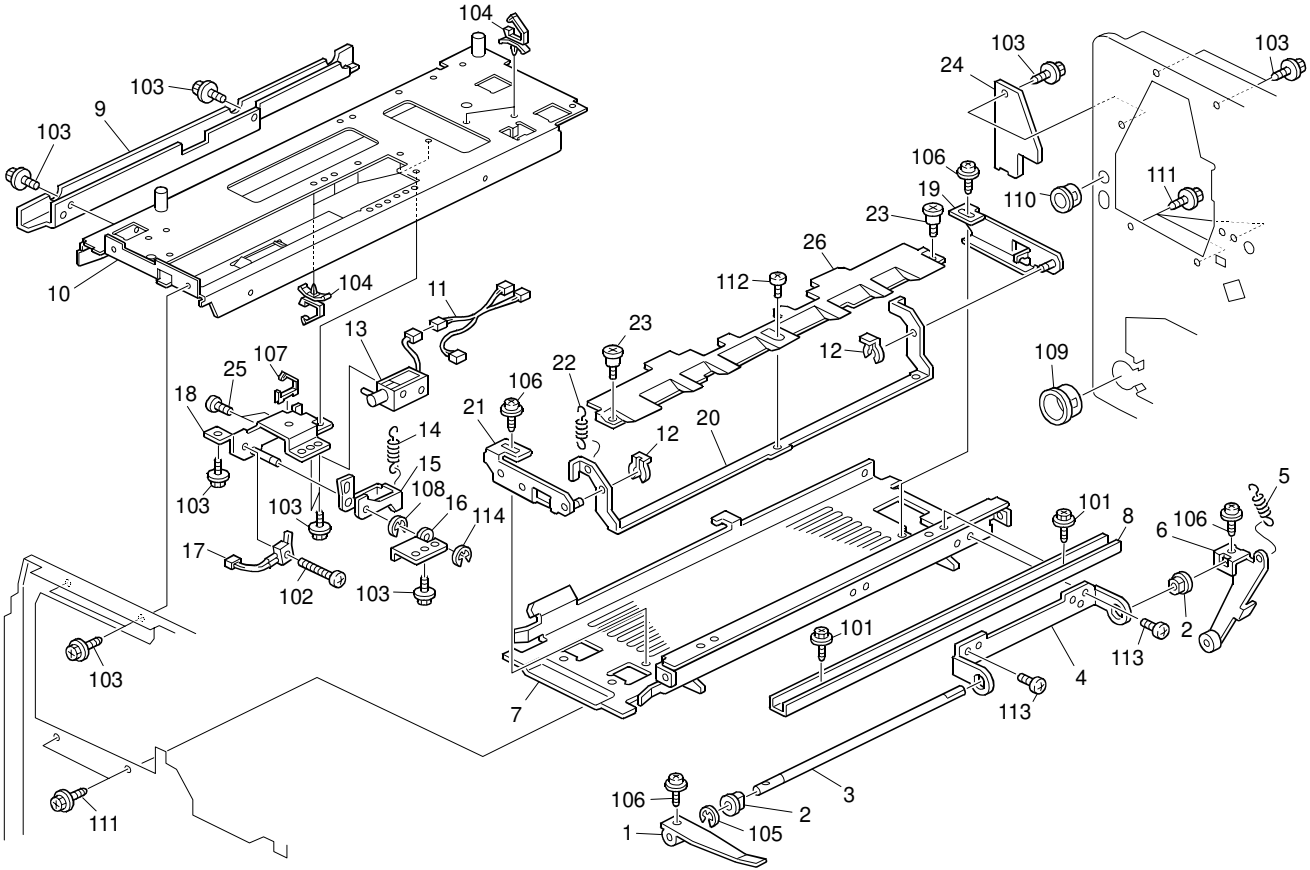

5.Frame Section 2

Index No.	Part No.	Description	Q'ty Per Assembly
1	C236 3978	EXIT PAWL	1
2	5053 0223	BUSHING - 8MM	2
3	C229 3977	PAPER EXIT PAWL SHAFT	1
4	C269 3356	BRACKET:SHAFT:PAWL:MOVEABLE:EXIT	1
5	C265 3975	SPRING:PAWL:MOVEABLE:EXIT	1
6	C244 3968	LEVER:PAWL:MOVEABLE:EXIT:ASS'Y	1
7	C257 3597	LOWER STAY	1
8	C244 3596	LOWER GUIDE STAY - TRANSFER ROLLER	1
9	C280 1078	COVER:HARNESS	1
10	C280 3570	STAY:UPPER:MAIN:WELDING	1
11	C280 5243	HARNESS:MASTER EJECTION:LOCK:CONNECTING:ASS'Y	1
12	5206 2686	SNAP RING	2
13	C257 3575	MASTER EJECT LOCK SOLENOID	1
14	C256 3574	LOCK SPRING	1
15	C250 3573	LOCK LEVER	1
16	C257 3587	MASTER EJECT LOCK SUPPORTING PLATE	1
17	C256 3576	MICRO HARNESS	1
18	C257 3580	MASTER EJECT LOCK BRACKET	1
19	C257 3980	REAR BRACKET	1
20	C257 3941	SUPPORTING PLATE	1
21	C257 3983	FRONT BRACKET	1
22	C257 3987	TENSION SPRING	1
23	AA14 3863	SHOULDER SCREW - M3	2
24	C257 5622	MASTER EJECT DRIVE COVER	1
25	C259 7050	SCREW:M2.6X3	2
26	C257 3942	SCRAPER PICKOFF PAWL	1

Index No.	Part No.	Description	Q'ty Per Assembly
101	0451 3006N	TAPPING SCREW - 3X6	
102	0241 6060N	PAN HEAD SCREW M1.6X6	
103	0451 4006N	TAPPING SCREW - 4X6	
104	1105 0511	HARNESS CLAMP - LWS-0306ZC	
105	0720 0080E	RETAINING RING - M8	
106	0951 3006N	SCREW - M3X6	
107	1105 0551	CLAMP:LES-0505	
108	0720 0040E	RETAINING RING - M4	
109	1106 0349	BUSHING - 25	
110	1106 0167	BUSHING - 11MM	
111	0451 4008N	TAPPING SCREW:4X8	
112	0353 0060N	BIND SCREW - M3X6	
113	0354 0040N	SCREW-M4X4	
114	0720 0030E	RETAINING RING - M3	

6.Frame Section 3

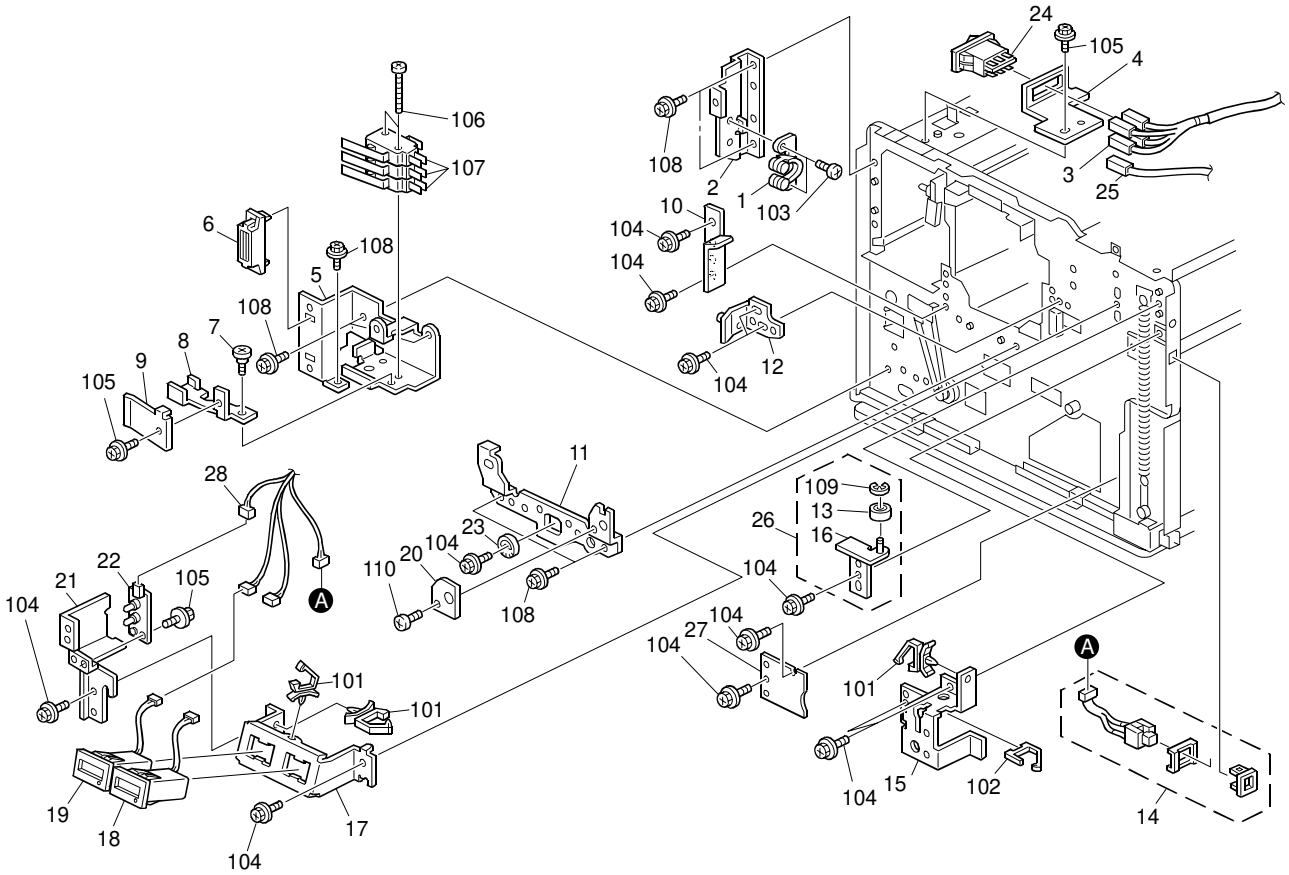

6.Frame Section 3

Index No.	Part No.	Description	Q'ty Per Assembly
1	AG07 1009	ROTARY CATCH	1
2	C244 1272	LEFT COVER BRACKET	1
3	C280 5213	HARNESS:MAIN SWITCH:ASS'Y	1
4	C262 5631	BRACKET:MAIN SWITCH	1
5	C262 5648	BRACKET:SAFETY SWITCH	1
6	AG07 1012	MAGNET CATCH:ASS'Y	1
7	C612 1803	SCREW:ENCODER:A4991378B	1
8	C244 5645	SAFETY SWITCH LEVER	1
9	C229 5646	SAFETY SWITCH SPRING	1
10	C244 2620	BRACKET:DRUM:LEFT	1
11	C233 2625	DRUM POSITION PLATE	1
12	C265 2616	BRACKET:PIN:DRUM:ASS'Y	1
13	C229 2281	MASTER TENSION ROLLER	1
14	C257 5856	PUSH SWITCH	1
15	C280 1273	SUPPORTING PLATE:SIDE PLATE:RIGHT UPPER	1
16	C269 2279	BRACKET:TENSION:PEEN	1
17	C244 5614	TOTAL COUNTER BRACKET	1
18	C257 5875	TOTAL COUNTER PAPER	1
19	C257 5874	TOTAL COUNTER MASTER	1
20	C229 2626	DRUM POSITION PLATE - SMALL	1
21	C262 5627	BRACKET:PRINTED CIRCUIT BOARD:LED	1
22	C257 5146	LED PCB	1
23	C257 2630	ADJUSTMENT PLATE	1
24	A250 5725	ROCKER SWITCH	1
25	C280 5284	HARNESS:DC DRIVE:ASS'Y	1
26	C269 1013	TENSIONER:MASTER:ASS'Y	1
27	C262 1051	COVER:BASE:SAFETY	1
28	C280 5286	HARNESS:CONNECTING:MAIN:FRONT:ASS'Y	1

Index No.	Part No.	Description	Q'ty Per Assembly
101	1105 0511	HARNESS CLAMP - LWS-0306ZC	
102	1105 0723	CLAMPS:WES-0507	
103	0353 0060N	BIND SCREW - M3X6	
104	0451 4006N	TAPPING SCREW - 4X6	
105	0451 3006N	TAPPING SCREW - 3X6	
106	0353 0350N	SCREW M3X35	
107	1204 2723	SWITCH:AM51612A531N	
108	0451 4008N	TAPPING SCREW:4X8	
109	0720 0030E	RETAINING RING - M3	
110	0354 0060N	SCREW-M4X6	

7.Drive Section 1

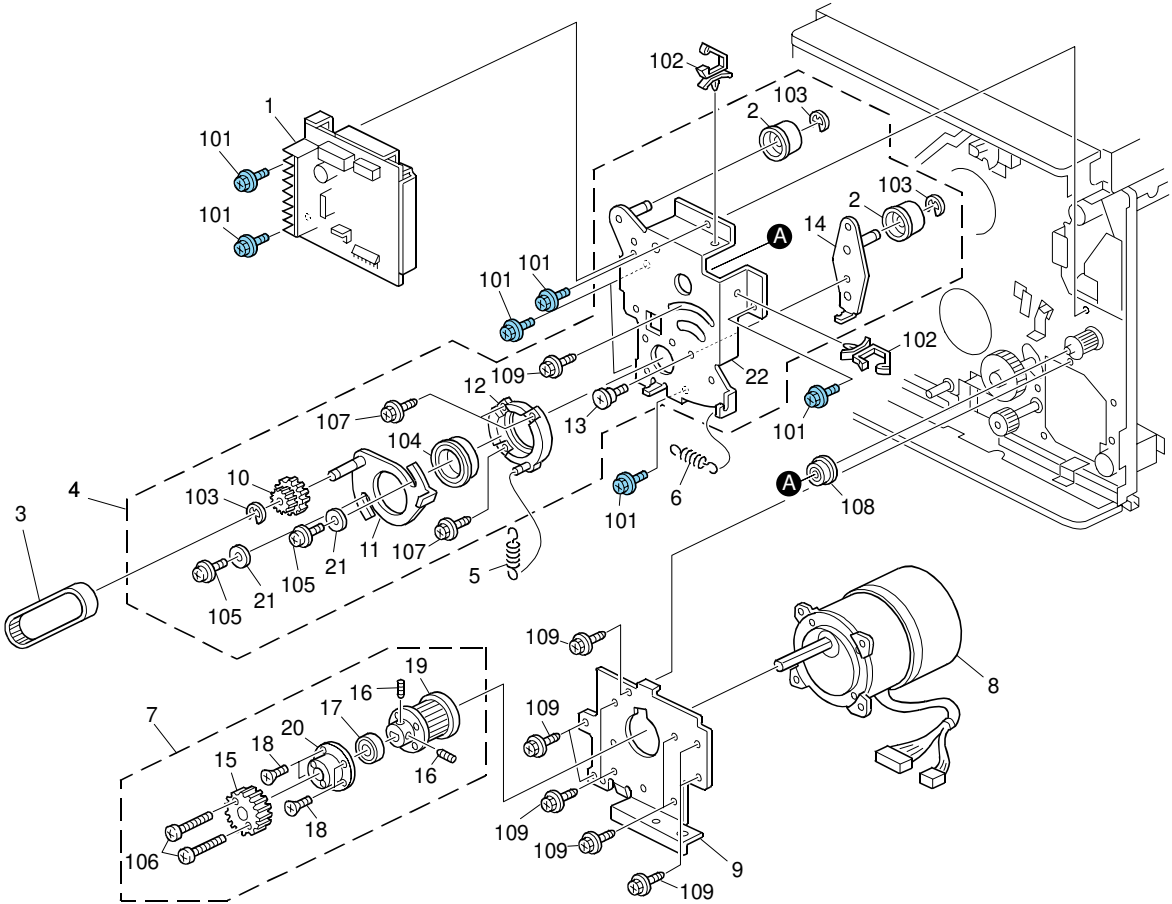

7.Drive Section 1

Index No.	Part No.	Description	Q'ty Per Assembly
1	C269 5150	PRINTED CIRCUIT BOARD:MOTOR:DRIVE	1
2	C244 1145	ROLLER:BELT TENSIONER:ASS'Y	2
3	C229 1154	TIMING BELT	1
4	C257 1035	TORQUE LIMITER DRIVE ASS'Y	1
5	C244 1173	DIAL SPRING	1
6	C265 1143	TENSION SPRING:BELT TENSION	1
7	C257 1036	TORQUE LIMITER ASS'Y	1
8	C259 5800	BRUSHLESS MOTOR:DC24V:114W	1
9	C262 1066	BASE:BRUSHLESS MOTOR	1
10	C229 1151	GEAR PULLEY	1
11	C244 1036	DRIVE BRACKET	1
12	C244 1040	HOLDER:BEARING CASE:PEEN	1
13	C244 5125	STEPPED SCREW - M6	1
14	C244 1048	TENSION BRACKET	1
15	C229 1039	MOTOR GEAR	1
16	C265 1063	HEXAGON SCREW - M5X4	2
17	C229 1064	BALL BEARING 68000ZZ	1
18	C233 1065	SCREW M3X4	4
19	C233 1074	TORQUE LIMITER 55KGF CM	1
20	C233 1079	SHIELDED SLEEVE:TORQUE LIMITER	1
21	C257 7051	WASHER:DIA4.5XDIA14X1T:T:T	2
22	C244 1067	TENSION HOLDER	1

Index No.	Part No.	Description	Q'ty Per Assembly
101	0454 4006Q	TAPPING SCREW:4X6	
102	1105 0489	HARNESS CLAMP - LWS 1316	
103	0720 0060E	RETAINING RING - M6	
104	0805 3444	BALL BEARING - 25X37X7	
105	0951 4008N	SCREW:POLISHED ROUND:M4X8	
106	0353 0120N	SCREW M3X12	
107	0451 4008N	TAPPING SCREW:4X8	
108	0805 3205	BALL BEARING - 10X19X7MM	
109	0451 4006N	TAPPING SCREW - 4X6	

8.Drive Section 2

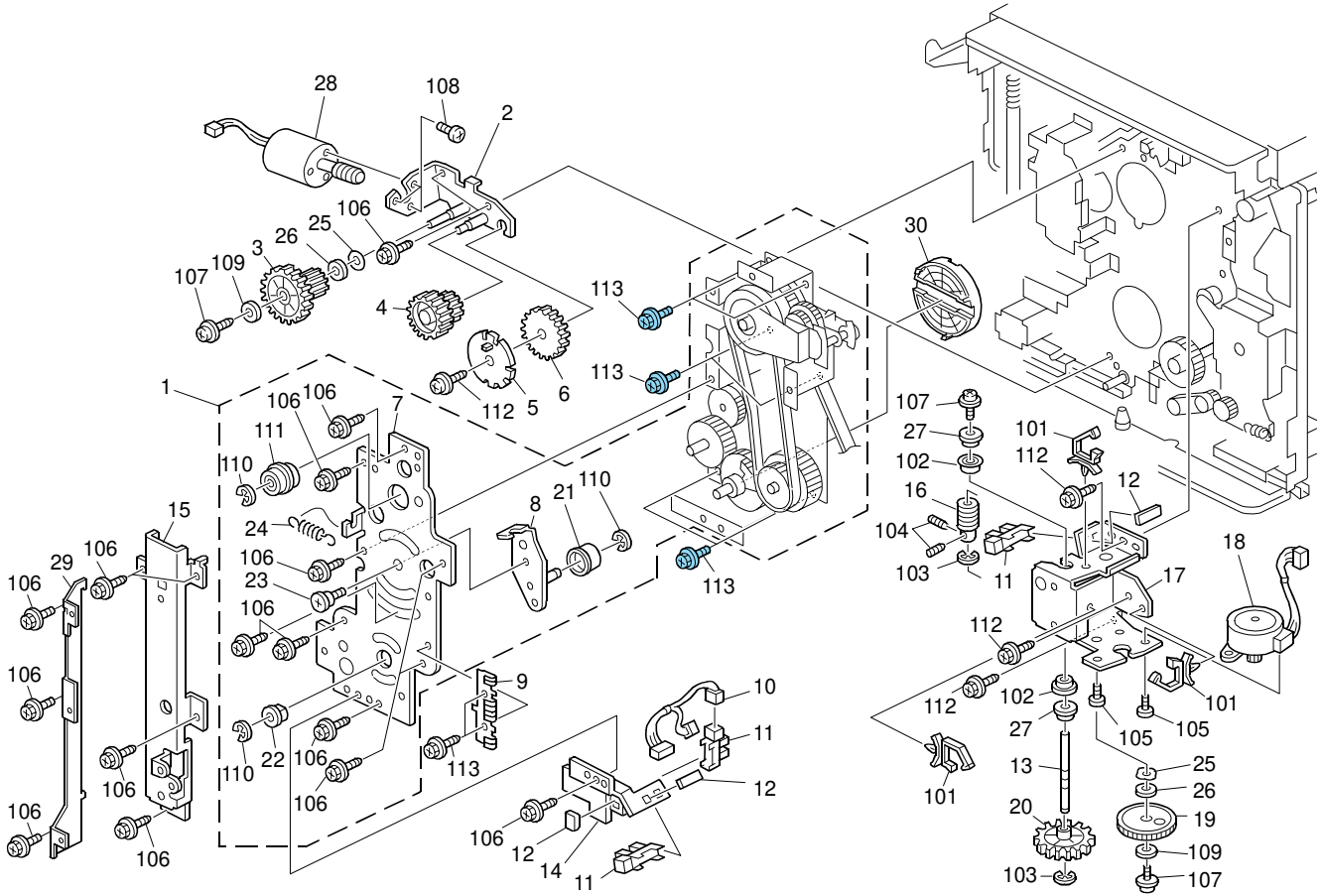

8.Drive Section 2

Index No.	Part No.	Description	Q'ty Per Assembly
1	**C257 1022**	**DRUM DRIVE SHAFT ASS'Y**	**1**
2	C257 3350	PRESSURE BRACKET	1
3	C229 3145	WORM WHEEL - 50Z/16Z	1
4	C257 3338	GEAR	1
5	C257 3337	PRESSURE POSITIONING SENSOR SLITTER	1
6	C257 3336	PRESSURE DRIVE CAM GEAR	1
7	C244 1128	BRACKET:SUPPORTING PLATE:DRIVE	1
8	C244 1048	TENSION BRACKET	1
9	C236 5673	HDD GROUND PLATE	2
10	C280 5230	HARNESS:PRESSURE SUB-UNIT: CONNECTING:ASS'Y	1
11	AW02 0203	PHOTOINTERRUPTOR:GP1A173LCS2F	2
12	H522 1100	SENSOR GUIDE	2
13	C257 1179	WORM GEAR SHAFT	1
14	C257 3354	PRESSURE SENSOR BRACKET	1
15	C280 5628	BRACKET:BASE:FIX	1
16	C229 1175	WORM WHEEL	1
17	C257 1170	BRACKET	1
18	C259 5821	STEPPER MOTOR:DIA42:PLOTTER:ASS'Y	1
19	C257 1177	SLOW DOWN GEAR	1
20	C257 1176	WORM GEAR SHAFT GEAR	1
21	C244 1145	ROLLER:BELT TENSIONER:ASS'Y	1
22	5053 0419	BUSHING - 10MM	1
23	C244 5125	STEPPED SCREW - M6	1
24	C257 1143	TENSION SPRING	1
25	C217 5102	SPRING WASHER	2
26	B180 1743	SBU WASHER	2
27	C209 3615	SPACER - 6*12*3	2
28	C259 5806	DC MOTOR:7.2W:MM34	1
29	C280 5632	BRACKET:BASE:AUXILIARY	1
30	C233 3191	JOINT CORE	1

Index No.	Part No.	Description	Q'ty Per Assembly
101	1105 0511	HARNESS CLAMP - LWS-0306ZC	
102	0741 3506	BALL BEARING - 6X12X4 MM	
103	0720 0040E	RETAINING RING - M4	
104	0573 0040E	HEXAGON HEADLESS SET SCREW - M3X4	
105	0353 0060N	BIND SCREW - M3X6	
106	0451 4006N	TAPPING SCREW - 4X6	
107	0951 3006N	SCREW - M3X6	
108	0353 0040N	SCREW - M3X4	
109	0701 0060N	WASHER DIA6	
110	0720 0060E	RETAINING RING - M6	
111	0805 3134	BALL BEARING - 10X26X8MM	
112	0951 4006N	SCREW:POLISHED ROUND:M4X6	
113	0454 4006Q	TAPPING SCREW:4X6	

9.Drive Section 3

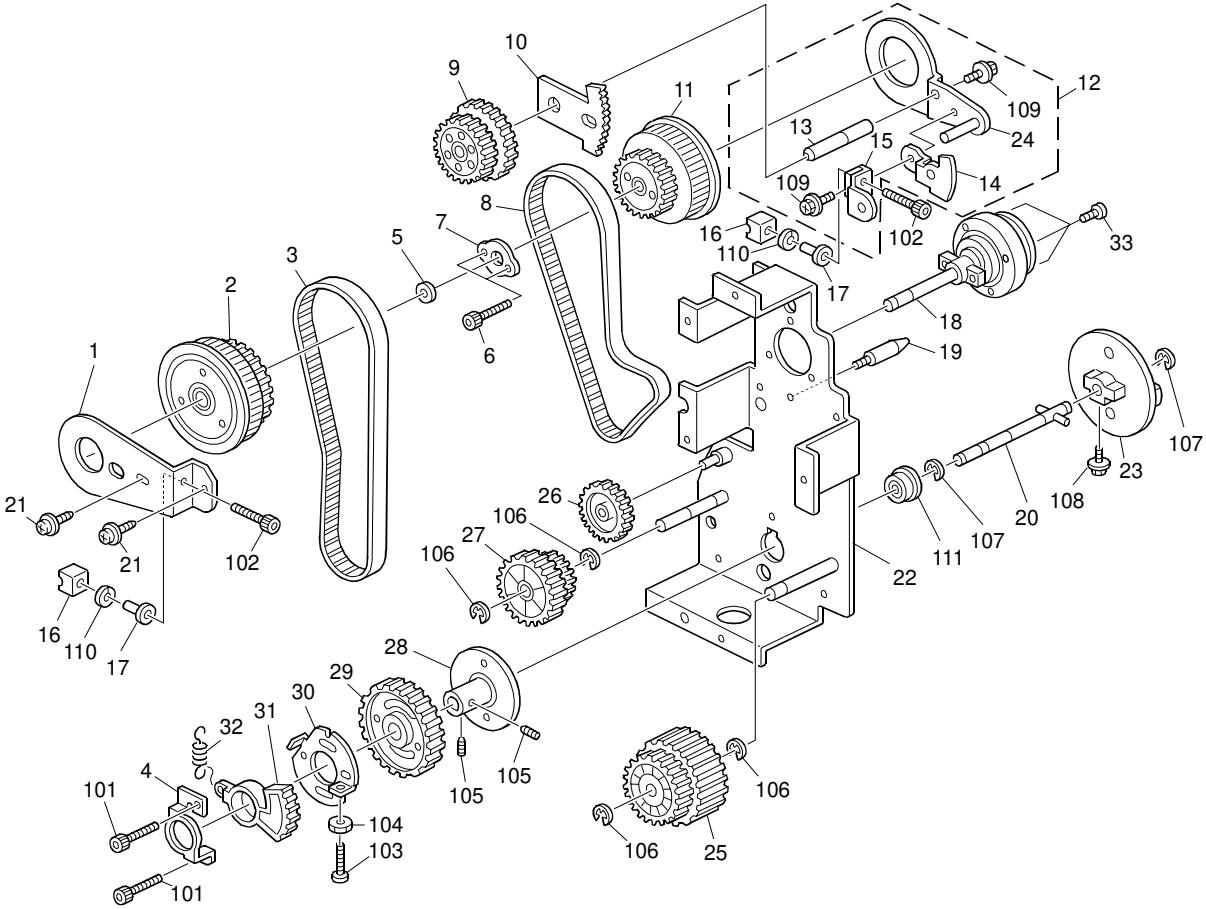

9.Drive Section 3

Index No.	Part No.	Description	Q'ty Per Assembly
1	C244 1127	GUIDE PLATE:HEAVEN AND EARTH:RIGHT	1
2	C257 1060	DRIVE TIMING PULLEY	1
3	C229 1187	TIMING BELT - PRESSURE CYLINDER DRIVE	1
4	C244 3185	GEAR ADJUSTER	1
5	C257 1065	SPACER	1
6	C233 1093	HEXAGONAL SET SCREW:LOCK:M4X20	2
7	C244 1093	TIMING PULLEY BRACKET	1
8	C229 1142	TIMING BELT - S5M780	1
9	C229 1130	RELAY GEAR ASS'Y	1
10	C244 1124	SECTOR GEAR - IMAGE SHIFT	1
11	C233 1092	TIMING PULLEY:DRIVE:DRUM	1
12	C257 1032	GUIDE PLATE ASS'Y	1
13	C229 1121	RELAY GEAR SHAFT	1
14	C244 1126	SHIELDING PLATE:POSITIONING SENSOR	1
15	C257 1132	PRESSURE GEAR BRACKET	1
16	C257 1130	PRESSURE GEAR HOLDER	2
17	C257 1131	SPRING WASHER GUIDE	2
18	C244 1090	SHAFT:DRIVE:DRUM:ASS'Y	1
19	C269 1192	GUIDE PIN:INSERT:DRUM	1
20	C265 1028	SHAFT:DRIVE:PRESS DRAM:ASS'Y	1
21	C244 1099	SCREW M4X6	3
22	C265 1101	SIDE PLATE:DRIVE:DRUM:ASS'Y	1
23	C229 3196	JOINT FLANGE	1
24	C265 1123	GUIDE PLATE:HEAVEN AND EARTH:FRONT:ASS'Y	1
25	C229 1198	LOWER TIMING PULLEY - CYLINDER DRIVE	1
26	C207 4672	GEAR - 36Z	1
27	C229 1140	FEED ROLLER DRIVE GEAR	1
28	C229 3181	ADJUSTING CAM	1
29	C229 3182	PRESSURE CYLINDER GEAR	1
30	C244 3184	STOPPER FLANGE	1
31	C244 3183	GEAR:PRESS DRAM UNIT:AUXILIARY	1
32	C244 3186	TENSION SPRING:GEAR:PRESS DRAM	1
33	C244 1098	PAN HEAD SCREW:LOCK:M4X4	3

Index No.	Part No.	Description	Q'ty Per Assembly
101	0595 0080E	HEXAGON BOLT - M5X8	
102	0594 0120E	HEXAGON BOLT - M4X12	
103	0314 0160N	PAN HEAD SCREW:M4X16	
104	0710 0040N	HEXAGONAL NUT:M4	
105	0575 0050E	HEXAGON HEADLESS SET SCREW - M5X5	
106	0720 0060E	RETAINING RING - M6	
107	0720 0080E	RETAINING RING - M8	
108	0451 4008N	TAPPING SCREW:4X8	
109	0451 4006N	TAPPING SCREW - 4X6	
110	0703 0060N	SPRING WASHER DIA6	
111	0805 3205	BALL BEARING - 10X19X7MM	

10.Drive Section 4

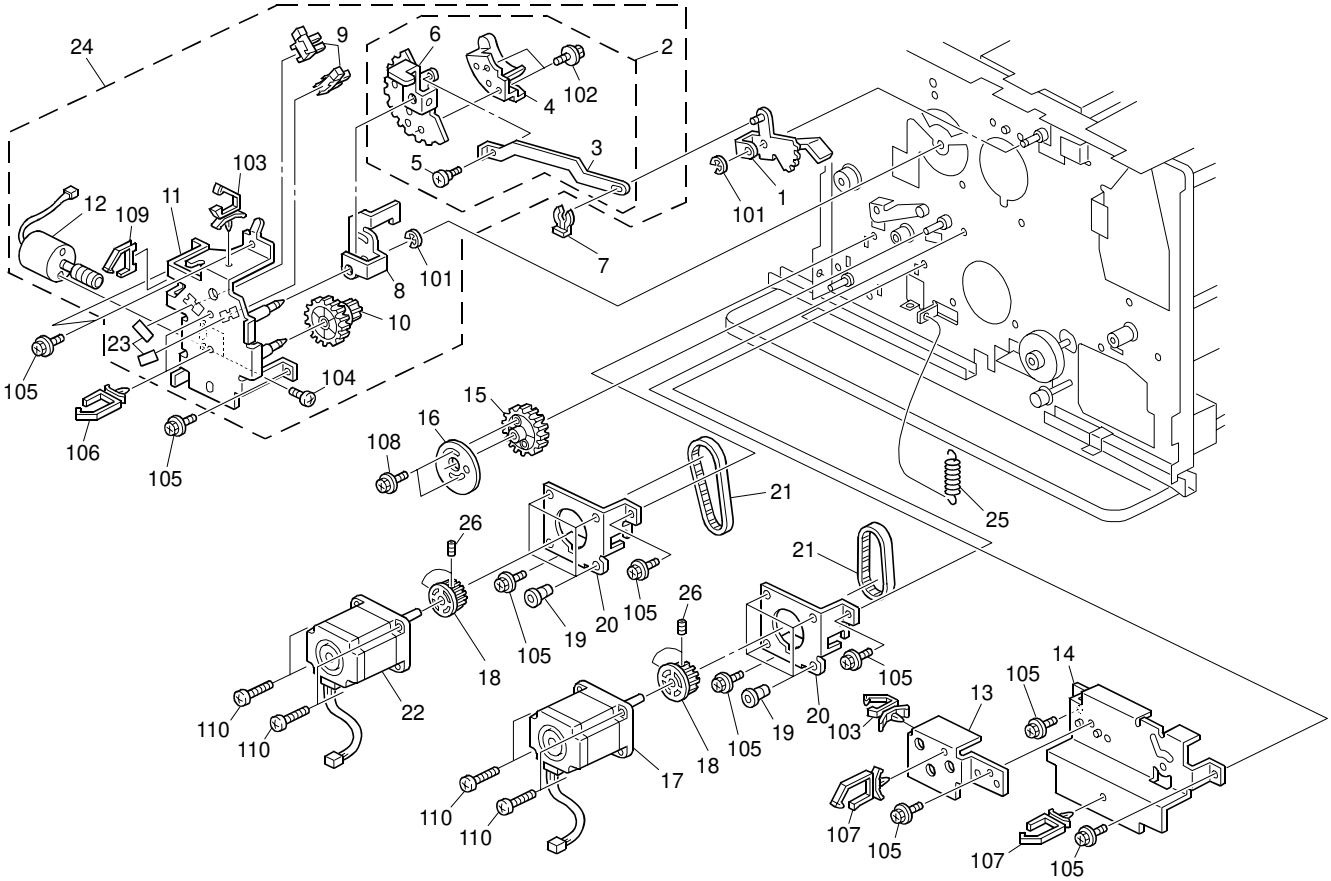

10.Drive Section 4

Index No.	Part No.	Description	Q'ty Per Assembly
1	C244 4001	SECTOR ARM	1
2	C257 4050	GUIDE SECTOR ASS'Y	1
3	C244 4051	LINK	1
4	C229 4053	GUIDE PIN	1
5	C244 3522	STEPPED SCREW	1
6	C244 4052	SECTOR ARM	1
7	5447 2681	SNAP RING	1
8	C244 4054	MASTER FEED ARM	1
9	AW02 0141	PHOTOINTERRUPTOR	2
10	C229 4056	WORM GEAR	1
11	C244 4189	BRACKET:CLAMP:OPEN AND CLOSE:ASS'Y	1
12	C259 5803	DC MOTOR:5.0W:MM34	1
13	C244 2931	PULLEY COVER	1
14	C244 2930	GUIDE PLATE	1
15	C257 2927	CAM:PRESSURE RELEASE:ASS'Y	1
16	C239 2937	PRESSURE RELEASE CAM	1
17	C257 5816	STEPPER MOTOR MM56*66	1
18	C229 2946	MOTOR PULLEY	2
19	C403 1899	RUBBER BUSHING - M4	8
20	C244 5731	PAPER FEED MOTOR BRACKET	2
21	C229 2948	TIMING BELT - 80-XL-050	2
22	C257 5817	STEPPER MOTOR MM56*64	1
23	H522 1100	SENSOR GUIDE	2
24	C280 4000	CLAMP:OPEN AND CLOSE:MASTER FEED:ASS'Y	1
25	C265 2998	TENSION SPRING:BRACKET:STEPPER MOTOR:18N	1
26	C269 1096	HEXAGONAL SET SCREW:M4X8	4

Index No.	Part No.	Description	Q'ty Per Assembly
101	0720 0060E	RETAINING RING - M6	
102	0451 3006N	TAPPING SCREW - 3X6	
103	1105 0511	HARNESS CLAMP - LWS-0306ZC	
104	0353 0040N	SCREW - M3X4	
105	0451 4006N	TAPPING SCREW - 4X6	
106	1105 0489	HARNESS CLAMP - LWS 1316	
107	1105 0490	HARNESS CLAMP - IWS-2218	
108	0450 4008N	TAPPING SCREW - M4X8	
109	1105 0723	CLAMPS:WES-0507	
110	0354 0140N	SCREW M4X14	

11.Paper Feed Section 1

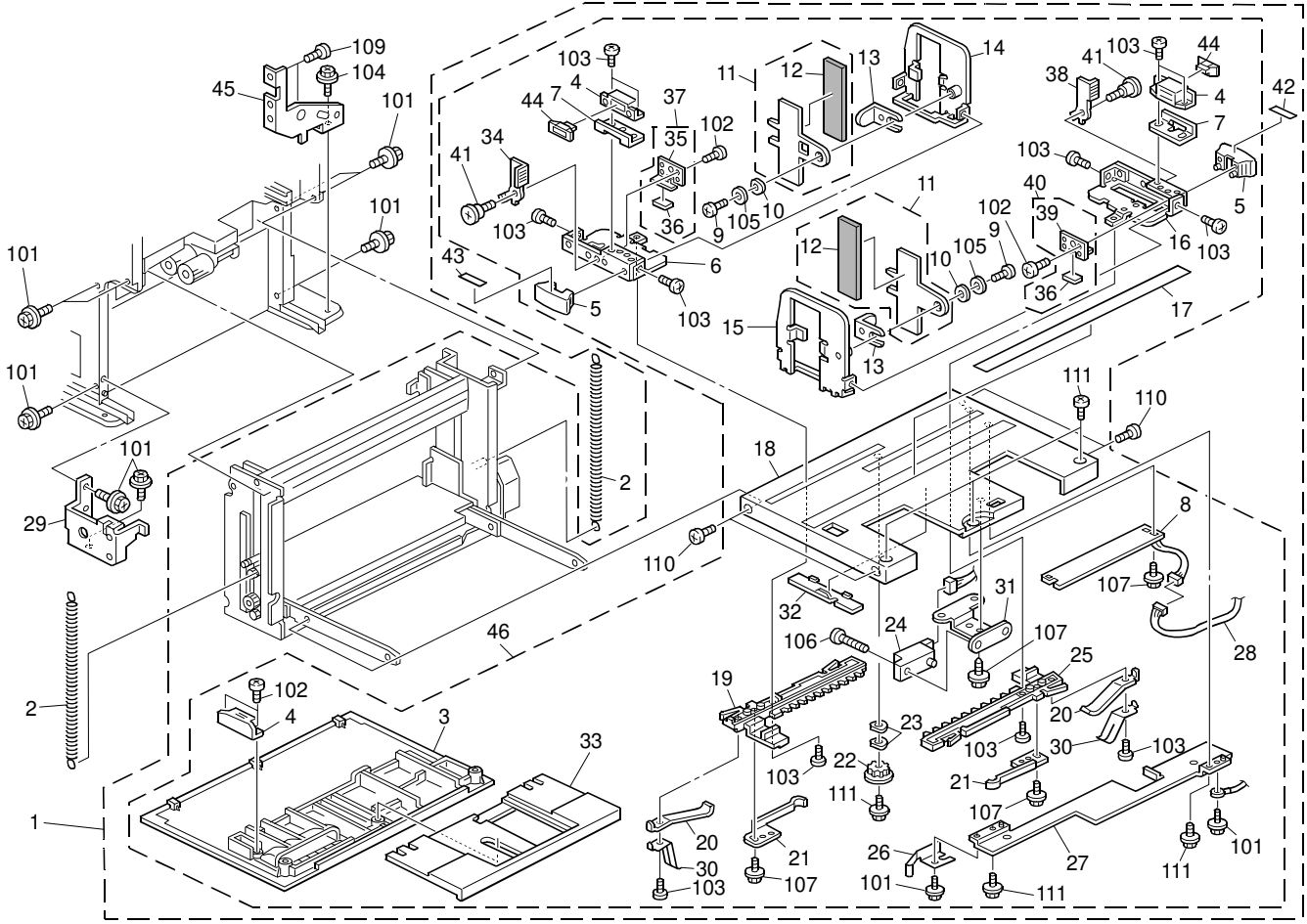

11.Paper Feed Section 1

Index No.	Part No.	Description	Q'ty Per Assembly
1	C280 2744	PAPER FEED UNIT:ASS'Y	1
2	C265 2828	TENSION SPRING:RISE:PAPER TRAY	2
3	C280 2784	COVER:PAPER TRAY:MOVEABLE	1
4	AG07 0504	MAGNET CATCH:44.1N	3
5	C244 2804	SIDE FENCE GRIP	2
6	C235 2796	LEFT SIDE FENCE SLIDER ASS'Y	1
7	C229 2793	SIDE FENCE STOPPER	2
8	C280 5155	PRINTED CIRCUIT BOARD:PAPER SIZE SENSOR:ASS'Y	1
9	5506 1536	SCREW - M4X6	2
10	5070 0923	SPRING WASHER - ROTATING TABLE	2
11	C257 2780	PAPER FEED SIDE FENCE PAD	2
12	C257 2781	PAPER FEED SIDE FENCE PAD	2
13	C209 5092	RUBBER PLATE LEVER	2
14	C235 2802	LEFT SIDE FENCE ASS'Y	1
15	C235 2791	RIGHT SIDE FENCE	1
16	C235 2786	RIGHT SIDE FENCE SLIDER ASS'Y	1
17	C280 2951	DECAL:SCALE:PAPER	1
18	C280 2775	PAPER TRAY:1000	1
19	C229 2781	SIDE FENCE RACK	1
20	C229 2784	GROUNDING PLATE	2
21	C229 2794	TENSION SPRING PLATE	2
22	G011 3305	GEAR - 16Z	1
23	5443 2713	WAVE WASHER	2
24	AW01 0112	PHOTO REFLECTION SENSOR:ORIGINAL TABLE	1
25	C229 2780	SIDE FENCE RACK - RIGHT	1
26	C229 2952	SPRING PLATE - PAPER TRAY	1
27	C244 2955	GROUND PLATE	1
28	C280 5236	HARNESS:PAPER:SIZE:ASS'Y	1
29	C244 1291	SUPPORT PLATE - RIGHT LOWER	1
30	C229 2954	SPRING PLATE	2
31	C244 2777	BRACKET:SENSOR:PAPER TRAY	1
32	C244 2778	HARNESS HOLDER	1
33	C280 2777	PAPER TRAY:MOVEABLE:AUXILIARY	1

Index No.	Part No.	Description	Q'ty Per Assembly
34	C235 2819	LOCK LEVER - LEFT SIDE FENCE	1
35	C235 2821	SPRING PLATE:LEVER:LOCK:RIGHT	1
36	C235 2818	PAD:LEVER:LOCK	2
37	C235 2820	LEFT LOCK LEVER SPRING PLATE ASS'Y	1
38	C235 2815	LOCK LEVER - RIGHT SIDE FENCE	1
39	C235 2817	SPRING PLATE:LEVER:LOCK:RIGHT	1
40	C235 2816	RIGHT LOCK LEVER SPRING PLATE ASS'Y	1
41	AA14 3861	SCREW - DIA5	2
42	C235 2813	DECAL - SIDE FENCE - RIGHT	1
43	C235 2814	DECAL - SIDE FENCE - LEFT	1
44	C257 2812	SPACER:MAGNET CATCH:SIDE FENCE	2
45	C262 1080	SUPPORTING PLATE:GRIP:REAR RIGHT	1
46	C280 2767	PAPER TRAY:MOVEABLE:ASS'Y	1
101	0451 4006N	TAPPING SCREW - 4X6	
102	0452 3008N	TAPPING SCREW - M3X8	
103	0353 0060N	BIND SCREW - M3X6	
104	0451 4008N	TAPPING SCREW:4X8	
105	0701 0080N	WASHER DIA8	
106	0353 0120N	SCREW M3X12	
107	0450 3010N	TAPPING SCREW - M3X10	
108	0452 3010N	BINDING SELF-TAPPING SCREW:3X10	
109	0354 0040N	SCREW-M4X4	
110	0453 4006N	BINDING SELF TAPPING SCREW:4X6	

12.Paper Feed Section 2

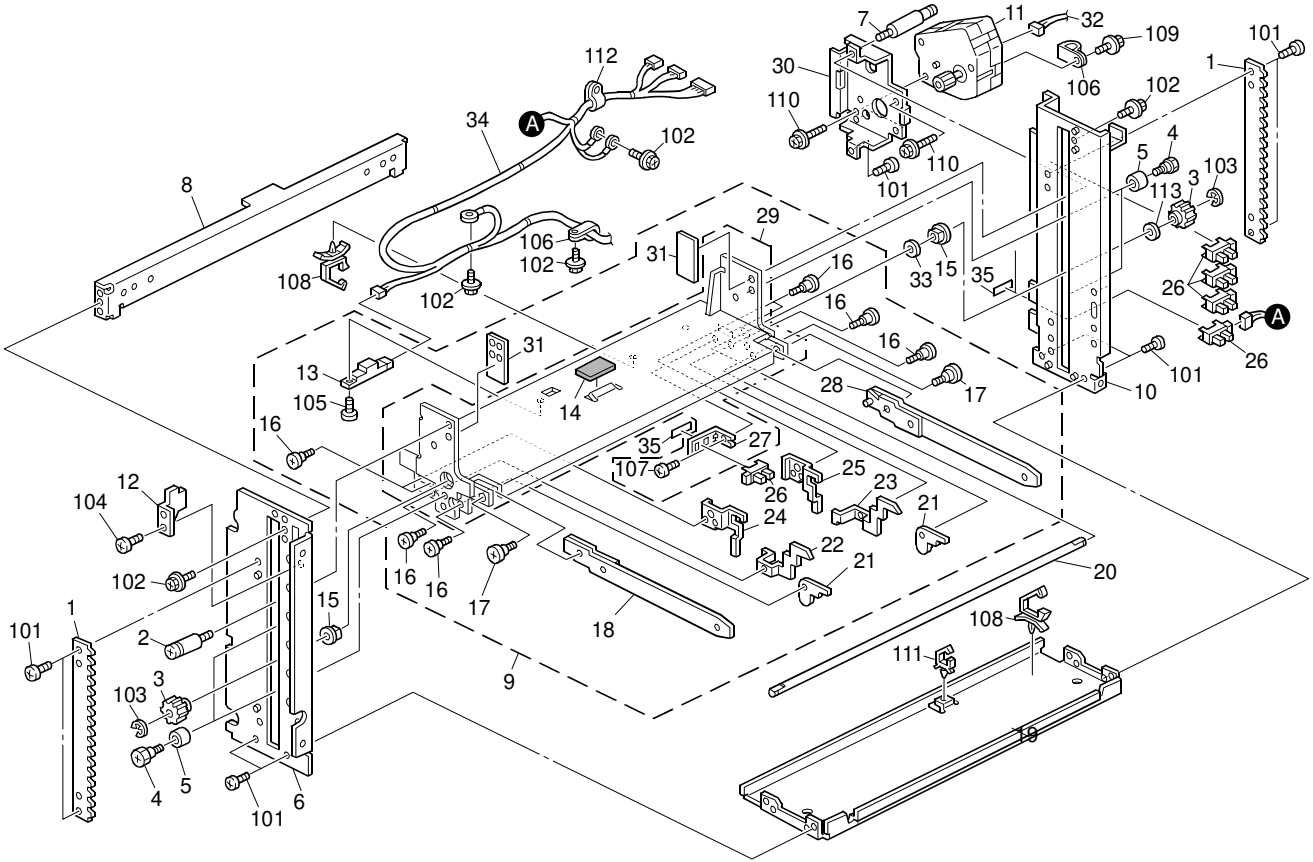

12.Paper Feed Section 2

Index No.	Part No.	Description	Q'ty Per Assembly
1	C244 2755	LIFT UP RACK - PAPER TABLE	2
2	C244 2827	SPRING ANCHOR - LEFT	1
3	C229 2824	GEAR - 20Z	2
4	C229 2829	LIFT UP SHAFT	4
5	5606 2310	ROLLER	4
6	C244 2754	LEFT SIDE PLATE	1
7	C244 2826	ANCHOR PAPER TRAY RIGHT	1
8	C244 2759	STAY	1
9	C280 2805	PAPER TRAY:FIX:ASS'Y	1
10	C244 2751	RIGHT SIDE PLATE	1
11	GX06 5814	DC MOTOR:PAPER FEED TRAY:24V	1
12	C244 2839	MAGNET CATCH BRACKET	1
13	C257 5807	PHOTO REFIECTION SENSOR:GP2A25	1
14	C229 2840	PAD	1
15	5053 0223	BUSHING - 8MM	2
16	AA14 3834	SCREW:M4	8
17	C244 2799	SCREW:LOCK:M4	2
18	C244 2786	LEFT STAY - PAPER TABLE	1
19	C244 2757	PAPER TABLE LOWER STAY	1
20	C265 2823	SHAFT:TRANSMISSION:PAPER TRAY:FIX	1
21	C229 2820	PRESSURE RELEASE PLATE	2
22	C244 2817	PRESSURE RELEASE ARM - LEFT	1
23	C244 2816	PRESSURE RELEASE ARM - RIGHT	1
24	C244 2815	LEFT ADJUSTING PLATE	1
25	C244 2814	RIGHT ADJUSTING PLATE	1
26	AW02 0203	PHOTOINTERRUPTOR:GP1A173LCS2F	5
27	C244 2810	PAPER SET SENSOR BRACKET	1
28	C244 2785	RIGHT STAY - PAPER TABLE	1
29	C244 2807	PAPER TABLE - FIXED	1
30	C262 5730	BRACKET:LIFT MOTOR	1
31	C239 2820	PAPER FEED GUIDE PLATE COVER	2
32	C280 5233	HARNESS:MOTOR:RISE:CONNECTING:ASS'Y	1
33	G024 1234	SPACER - 12.2X18X0.25	1
34	C280 5236	HARNESS:PAPER:SIZE:ASS'Y	1

Index No.	Part No.	Description	Q'ty Per Assembly
35	H522 1100	SENSOR GUIDE	2
101	0354 0050N	SCREW - M4X5	
102	0451 4006N	TAPPING SCREW - 4X6	
103	0720 0050E	RETAINING RING - M5	
104	0353 0040N	SCREW - M3X4	
105	0353 0060N	BIND SCREW - M3X6	
106	1105 0005	NYLON CLAMP - 3N	
107	0353 0040N	SCREW - M3X4	
108	1105 0516	CLAMP	
109	0450 4008N	TAPPING SCREW - M4X8	
110	0450 4025N	TAPPING SCREW:4X25	
111	1105 0487	HARNESS CLAMP	
112	1105 0016	NYLON CLAMP - 4N	
113	0807 5071	SPACER - 10X0.5MM	

13.Paper Feed Section 3

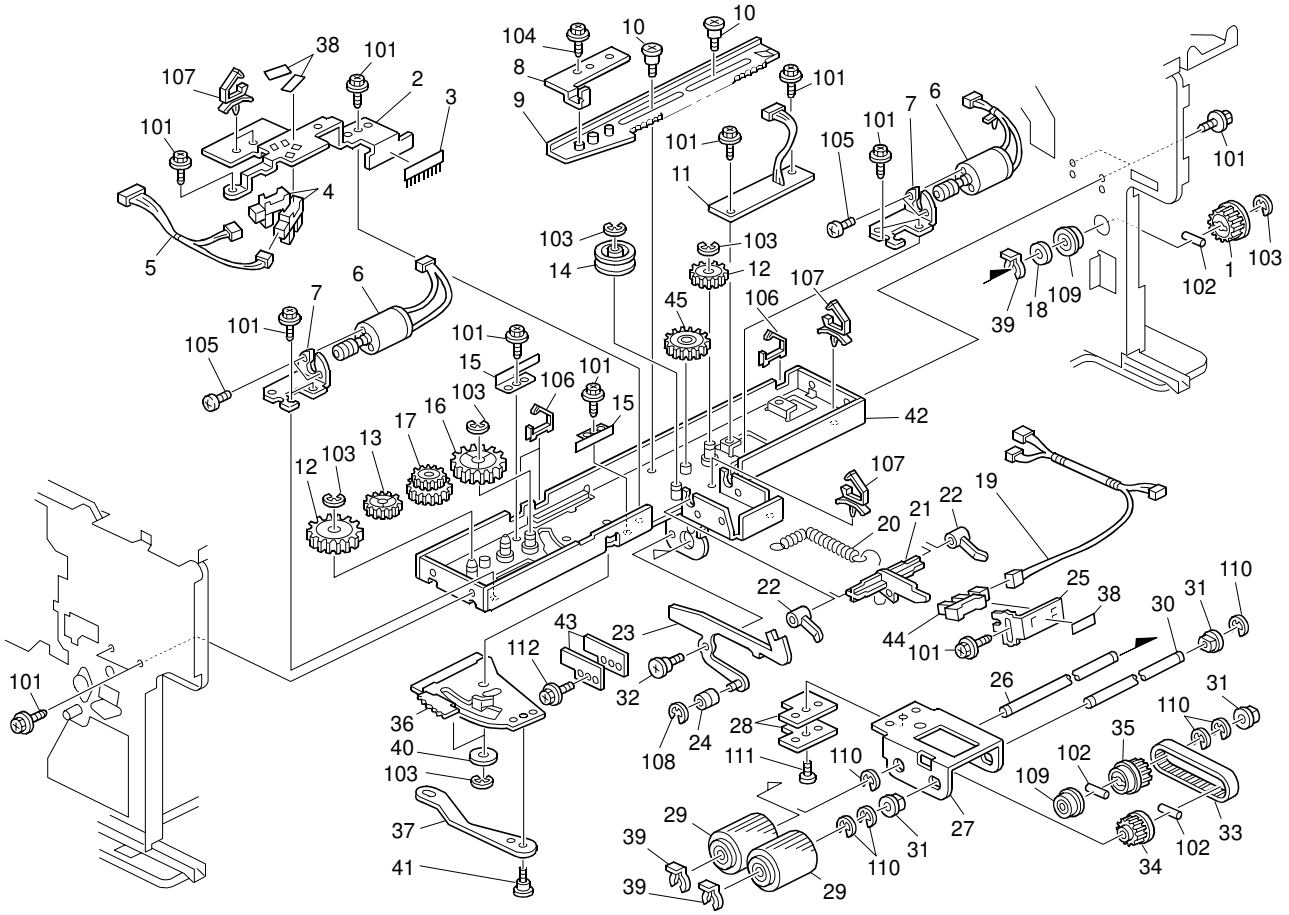

13.Paper Feed Section 3

Index No.	Part No.	Description	Q'ty Per Assembly
1	C229 2947	DRIVE PULLEY - PAPER SEPARATION	1
2	C257 2861	PRESSURE RELEASE SENSOR BRACKET	1
3	C257 2834	DISCHARGE BRUSH	1
4	AW02 0141	PHOTOINTERRUPTOR	2
5	C280 5241	HARNESS:REGISTRATION ROLLER:PRESSURE RELEASE:ASS'Y	1
6	C259 5827	DC MOTOR:3.7W:DIA25.4	2
7	C244 5734	FEED PRESSUER MOTOR BRACKET	2
8	C244 2860	SPRING BRACKET	1
9	C229 2858	SEPARATION CONTROL RACK	1
10	AA14 3791	SCREW:SAFETY	2
11	C280 5157	PRINTED CIRCUIT BOARD:PAPER FEED PRESSURE:ASS'Y	1
12	C229 2856	WORM WHEEL GEAR - 14Z/40Z	2
13	H519 4357	GEAR:IDLER:26Z	1
14	C200 3712	PULLEY	1
15	C257 2857	PRESSURE RELEASE LEVER SPRING PLATE	2
16	C236 2862	GEAR - 32Z/14Z	1
17	C209 4114	GEAR - 20/27Z	1
18	C257 7055	WASHER:DIA8.1XDIA11.5X1T	1
19	C280 5206	HARNESS:PAPER FEED PRESSURE:ASS'Y	1
20	C265 2861	TENSION SPRING:PAPER FEED PRESSURE	1
21	C229 2862	PAPER PRESSURE LEVER	1
22	C229 2863	BUSHING	2
23	C265 2862	FEELER:PAPER FEED ROLLER:SURFACE OF PAPER SENSOR:PEEN	1
24	C257 2869	FEELER ROLLER	1
25	C244 2866	HEIGHT SENSOR BRACKET	1
26	C244 2836	SHAFT:PAPER FEED ROLLER	1
27	C257 2833	PAPER FEED ARM	1
28	C257 2835	PAPER FEED ARM BALANCER	2
29	**C238 2835**	**PAPER FEED ROLLER**	**2**
30	C244 2838	SHAFT:PICKUP	1
31	5053 0223	BUSHING - 8MM	3

Index No.	Part No.	Description	Q'ty Per Assembly
32	C244 5125	STEPPED SCREW - M6	1
33	C244 2949	TIMING BELT:75-MXL-8.0	1
34	C238 2947	PICK-UP PULLY	1
35	C229 2950	FEED ROLLER DRIVE PULLEY	1
36	C257 2859	PRESSURE RELEASE LEVER	1
37	C257 2858	PRESSURE RELEASE LINK	1
38	H522 1100	SENSOR GUIDE	3
39	C265 2837	GRIP RINGS:DIA6	3
40	H041 2137	WASHER - M6.2X16	2
41	AA14 3861	SCREW - DIA5	1
42	C257 2850	STAY:PAPER FEED:ASS'Y	1
43	C257 2867	FEELER BALANCER	2
44	AW02 0203	PHOTOINTERRUPTOR:GP1A173LCS2F	1
45	C229 2857	GEAR - 14Z/42Z	1
101	0451 4006N	TAPPING SCREW - 4X6	
102	0633 0140G	PARALLEL PIN - 3X14	
103	0720 0060E	RETAINING RING - M6	
104	0450 4006N	TAPPING SCREW:4X6	
105	0353 0040N	SCREW - M3X4	
106	1105 0551	CLAMP:LES-0505	
107	1105 0511	HARNESS CLAMP - LWS-0306ZC	
108	0720 0030E	RETAINING RING - M3	
109	0805 3368	BALL BEARING - 8X16X5MM	
110	0720 0050E	RETAINING RING - M5	
111	0354 0080N	SCREW:M4X8	
112	0451 4008N	TAPPING SCREW:4X8	

14.Paper Feed Section 4

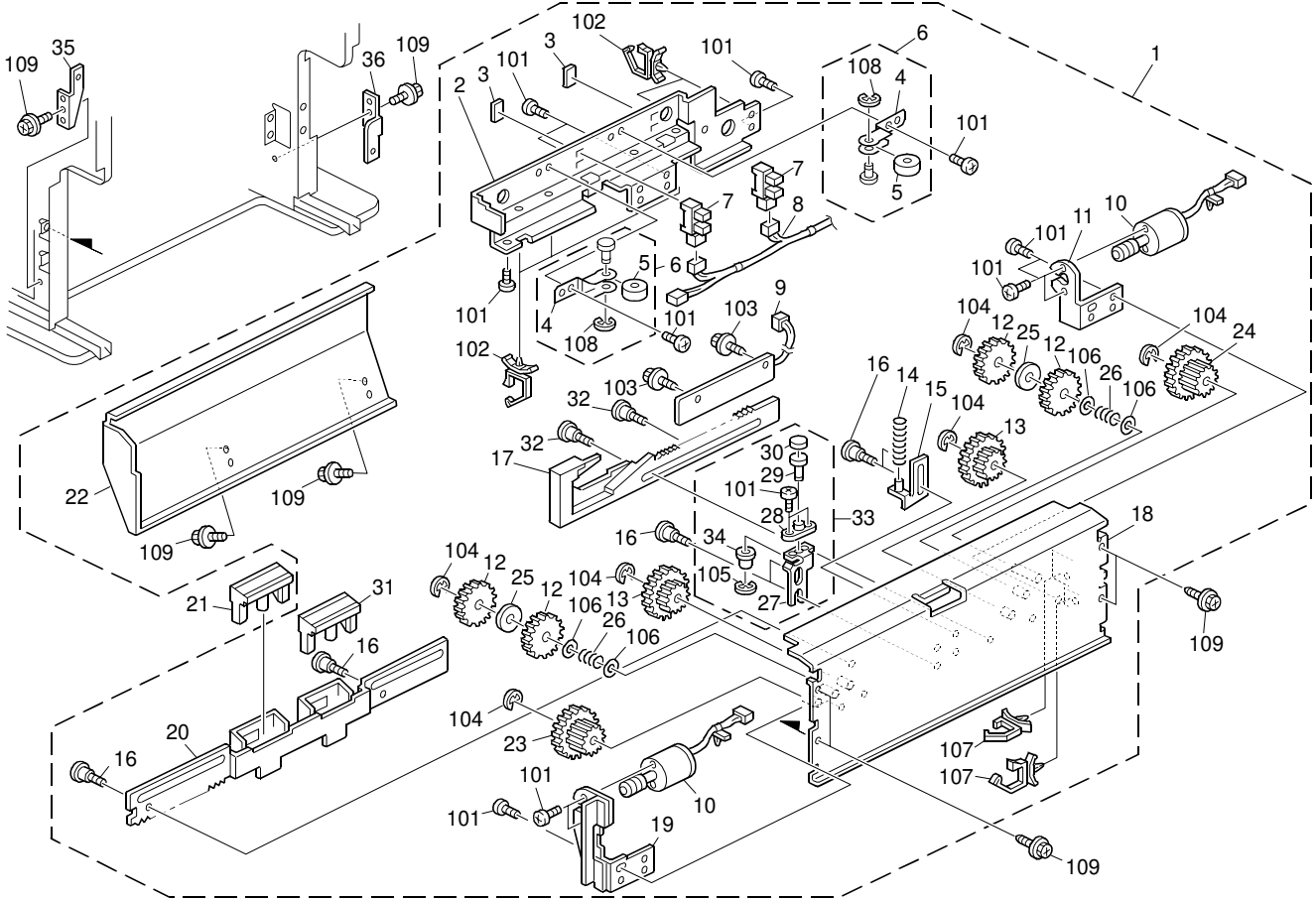

14.Paper Feed Section 4

Index No.	Part No.	Description	Q'ty Per Assembly
1	C280 2821	DRUM STAY:PAPER FEED:ASS'Y	1
2	C244 2879	SENSOR BRACKET	1
3	H522 1100	SENSOR GUIDE	2
4	C236 2881	SEPARATION PAD HOLDER BRACKET	1
5	C201 4604	DRUM RAIL ROLLER	2
6	C236 2880	SEPARATION PAD HOLDER BRACKET	2
7	AW02 0141	PHOTOINTERRUPTOR	2
8	C280 5238	HARNESS:SEPARATION:ASS'Y	1
9	C280 5153	PRINTED CIRCUIT BOARD:SEPARATION CHANGE:ASS'Y	1
10	C259 5827	DC MOTOR:3.7W:DIA25.4	2
11	C244 2875	MOTOR BRACKET	1
12	C236 2863	GEAR - 24Z	4
13	C229 2857	GEAR - 14Z/42Z	2
14	C265 2858	COMPRESSION SPRING:SEPARATION	1
15	C244 2855	LOWER PRESSURE PLATE	1
16	B223 1317	SCREW	6
17	C236 2860	SEPARATION RACK ASS'Y	1
18	C244 2832	DRUM STAY - PAPER FEED ASS'Y	1
19	C244 2871	MOTOR BRACKET	1
20	C244 2840	GUIDE RAIL BASE	1
21	**C257 2886**	**SEPARATION PAD - A**	**1**
22	C244 2880	COVER - SEPARATION SUB-UNIT	1
23	C236 2864	WORM WHEEL - GEAR	1
24	C236 2865	WORM WHEEL - GEAR	1
25	C236 2866	RUBBER WASHER	2
26	C265 2867	COMPRESSION SPRING:TORQUE LIMITER:SEPARATION UNIT	2
27	C244 2848	UPPER PRESSURE PLATE	1
28	C236 2848	SLIDER BUSHING	1
29	C236 2851	UPPER SLIDER	1
30	C257 2899	MAGNETIC:SEPARATION PAD	1
31	**C257 2895**	**SEPARATION PAD - B**	**1**
32	AA14 3791	SCREW:SAFETY	2

Index No.	Part No.	Description	Q'ty Per Assembly
33	C257 2845	SEPARATION PAD PRESSURE PLATE	1
34	C236 2862	GEAR - 32Z/14Z	1
35	C244 2635	BRACKET:DRUM STAY:FRONT	1
36	C244 2636	BRACKET:DRUM STAY:REAR	1
101	0353 0040N	SCREW - M3X4	
102	1105 0534	CLAMP	
103	0451 3006N	TAPPING SCREW - 3X6	
104	0720 0060E	RETAINING RING - M6	
105	0720 0020E	RETAINING RING - M2	
106	0807 5044	SPACER - 8.1MM X 11.5MM X 0.2	
107	1105 0516	CLAMP	
108	0720 0040E	RETAINING RING - M4	
109	0451 4006N	TAPPING SCREW - 4X6	

15.Paper Feed Section 5

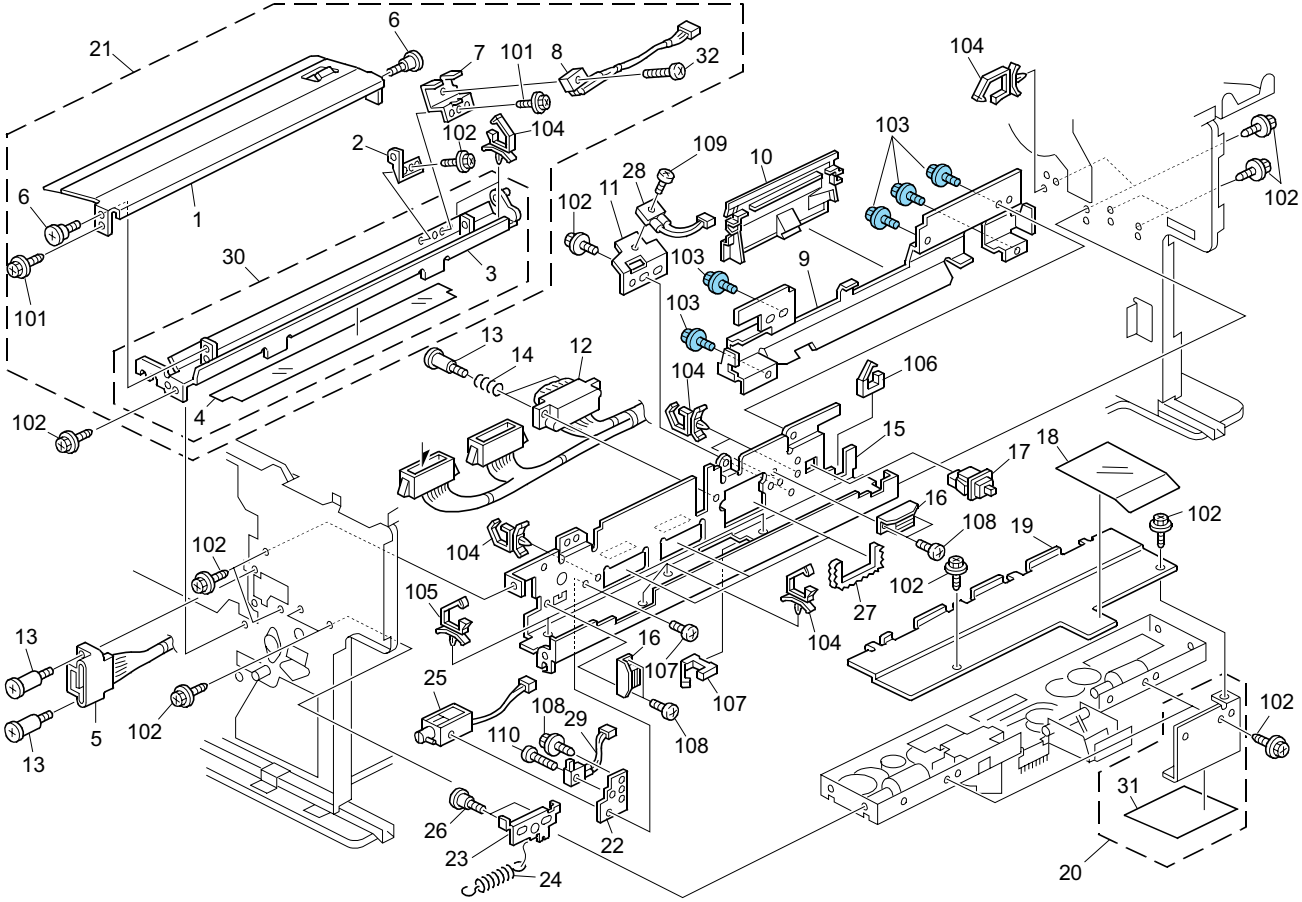

15.Paper Feed Section 5

Index No.	Part No.	Description	Q'ty Per Assembly
1	C257 2958	PAPER GUIDE PLATE	1
2	C257 2946	BRACKET PLATE	1
3	C269 2941	STAY:SENSOR:MASTER:1:ASS'Y	1
4	C257 2945	SHEET:PLATE:STAY:DOUBLE	1
5	C280 5208	HARNESS:DRUM:CONNECTING:ASS'Y	1
6	5206 2684	SHOULDER SCREW - M3	2
7	C257 5739	MASTER1SENSOR BRACKET	1
8	C280 5850	OPTICS SENSOR:MASTER:DRUM:1	1
9	C262 2262	COVER:STAY:MACHINE:PLOTTER	1
10	C262 2263	COVER:FLAT CABLE:MACHINE OR COPIER	1
11	C262 2265	BRACKET:SENSOR:CLAMP	1
12	C280 5283	HARNESS:CONNECTING:PLOTTER:ASS'Y	1
13	AA14 3569	SCREW	3
14	C244 2267	CONNECTOR SPRING	2
15	C269 2259	STAY:MAIN:PLOTTER:ADHESION	1
16	C262 2275	MAGNET CATCH:LOCK:PLOTTER	2
17	AW50 0012	PUSH SWITCH	1
18	C265 5735	SHEET:GRIP:COVER	1
19	C265 5733	COVER:HARNESS:PAPER FEED SUB-UNIT	1
20	C244 2845	PAPER FEED GUIDE PLATE	2
21	C280 2935	BRACKET:OPTICS SENSOR:MASTER:ASS'Y	1
22	C257 2265	MICRO SWITCH LOCK SPACER	1
23	C257 2263	LOCK STOPPER	1
24	C257 2261	LOCK TENSION SPRING	1
25	C257 3575	MASTER EJECT LOCK SOLENOID	1
26	C262 2264	SCREW:PLOTTER:STOPPER:LOCK	2
27	C262 2270	GUARD:NJ-16:97MM	3
28	C280 5852	OPTICS SENSOR:MASTER:DRUM:2	1
29	C256 3576	MICRO HARNESS	1
30	C257 2940	MASTER SENSOR BRACKET	1
31	C229 2846	SHEET:GUIDE PLATE:PAPER FEED ROLLER	1
32	C269 2760	SCREW:M2X7	1

Index No.	Part No.	Description	Q'ty Per Assembly
101	0451 3006N	TAPPING SCREW - 3X6	
102	0451 4006N	TAPPING SCREW - 4X6	
103	0454 4006Q	TAPPING SCREW:4X6	
104	1105 0511	HARNESS CLAMP - LWS-0306ZC	
105	1105 0488	HARNESS CLAMP	
106	1105 0551	CLAMP:LES-0505	
107	0800 0072	PHILIPS PAN HEAD SCREW - M2.6X4	
108	0353 0040N	SCREW - M3X4	
109	0352 0080N	SCREW:M2X8	
110	0241 6060N	PAN HEAD SCREW M1.6X6	

16.Paper Feed Section 6

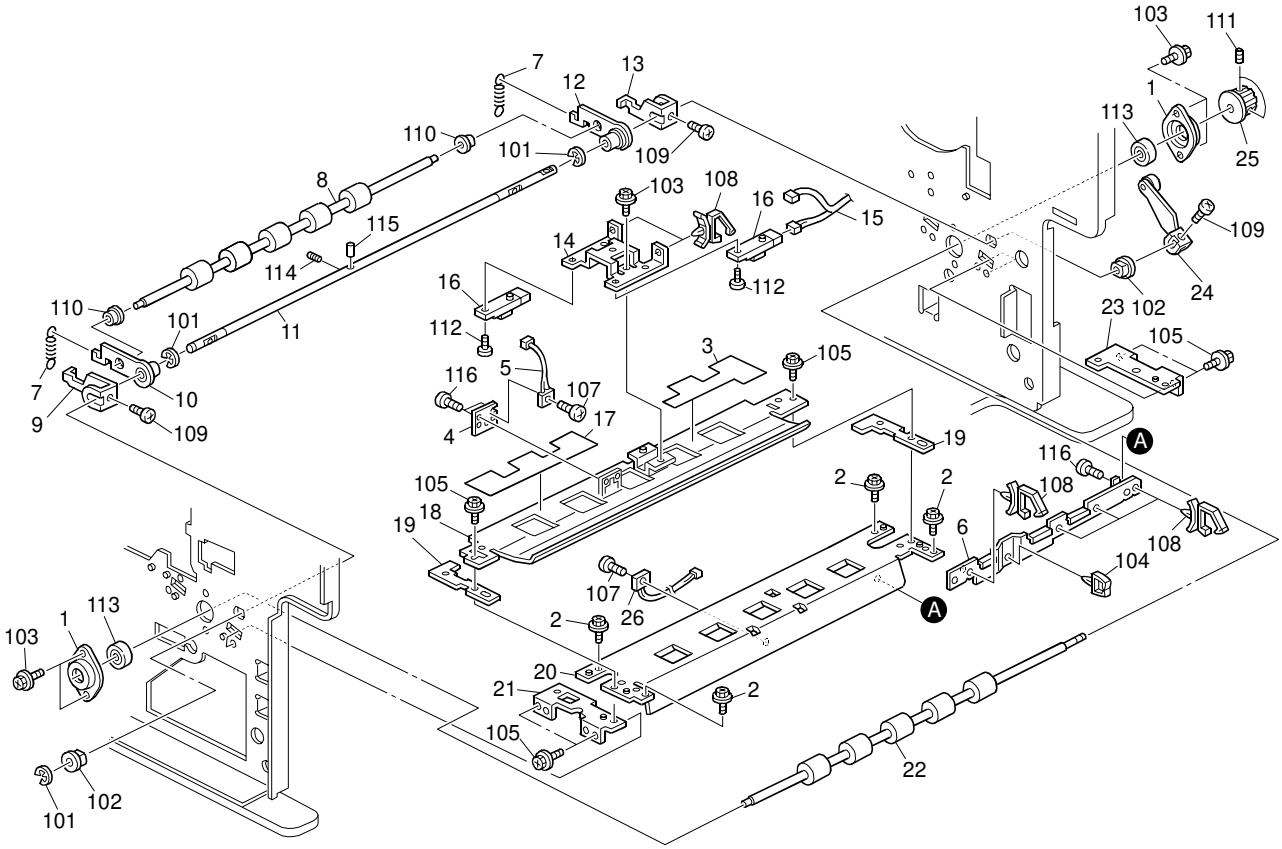

16.Paper Feed Section 6

Index No.	Part No.	Description	Q'ty Per Assembly
1	C244 2266	BEARING HOLDER	2
2	AA14 3813	HEXAGON HEAD BOLT WITH WASHER -M4X6	4
3	C257 2929	PLATE GUIDE - SHORT	1
4	C239 2925	DOUBLE FEED SENSOR UPPER BRACKET	1
5	C280 5851	OPTICS SENSOR:MASTER	1
6	C239 2929	CABLE BRACKET	1
7	C265 2901	TENSION SPRING:PRESSURE:FEED ROLLER:9.8N	2
8	C244 2905	FEED ROLLER-UPPER	1
9	C244 2899	PRESSURE RELEASE LOCK ARM - LEFT	1
10	C244 2894	LEFT PRESSURE ARM	1
11	C244 2900	PRESSURE RELEASE SHAFT	1
12	C244 2893	RIGHT PRESSURE ARM	1
13	C244 2898	PRESSURE RELEASE LOCK ARM - RIGHT	1
14	C244 2921	REGISTRATION SENSOR BRACKET	1
15	C280 5264	HARNESS:REGISTRATION:ASS'Y	1
16	C257 5807	PHOTO REFIECTION SENSOR:GP2A25	2
17	C257 2928	PLATE GUIDE - LONG	1
18	C262 2926	GUIDE PLATE:FEED ROLLER:UPPER:ASS'Y	1
19	C244 2919	GUIDE PLATE SPACER	2
20	C239 2927	LOWER FEED ROLLER GUIDE PLATE	1
21	C265 2923	BRACKET:GUIDE PLATE:FEED ROLLER:LEFT	1
22	C265 2906	FEED ROLLER:LOWER	1
23	C265 2922	BRACKET:GUIDE PLATE:FEED ROLLER:RIGHT	1
24	C244 5126	CAM FOLLOWER PLATE	1
25	C229 2907	REGISTRATION ROLLER PULLEY - 14Z	1
26	C280 5857	OPTICS SENSOR:DOUBLE FEED SENSOR:PHOTO	1

Index No.	Part No.	Description	Q'ty Per Assembly
101	0720 0060E	RETAINING RING - M6	
102	0805 3386	BUSHING - 8MM	
103	0451 3006N	TAPPING SCREW - 3X6	
104	1105 0234	CLAMP	
105	0451 4006N	TAPPING SCREW - 4X6	
107	0352 0080N	SCREW:M2X8	
108	1105 0511	HARNESS CLAMP - LWS-0306ZC	
109	0354 0060N	SCREW-M4X6	
110	0741 3706	BALL BEARING - 6X10X3	
111	0574 0060E	HEXAGON HEADLESS SET SCREW - M4X6	
112	0353 0060N	BIND SCREW - M3X6	
113	0740 3008	BALL BEARING - 8X22X7	
114	0573 0030E	HEXAGON HEADLESS SET SCREW - M3X3	
115	0623 0320E	SPRING PIN 3X32	
116	0353 0040N	SCREW - M3X4	

17.Pressure Cylinder 1

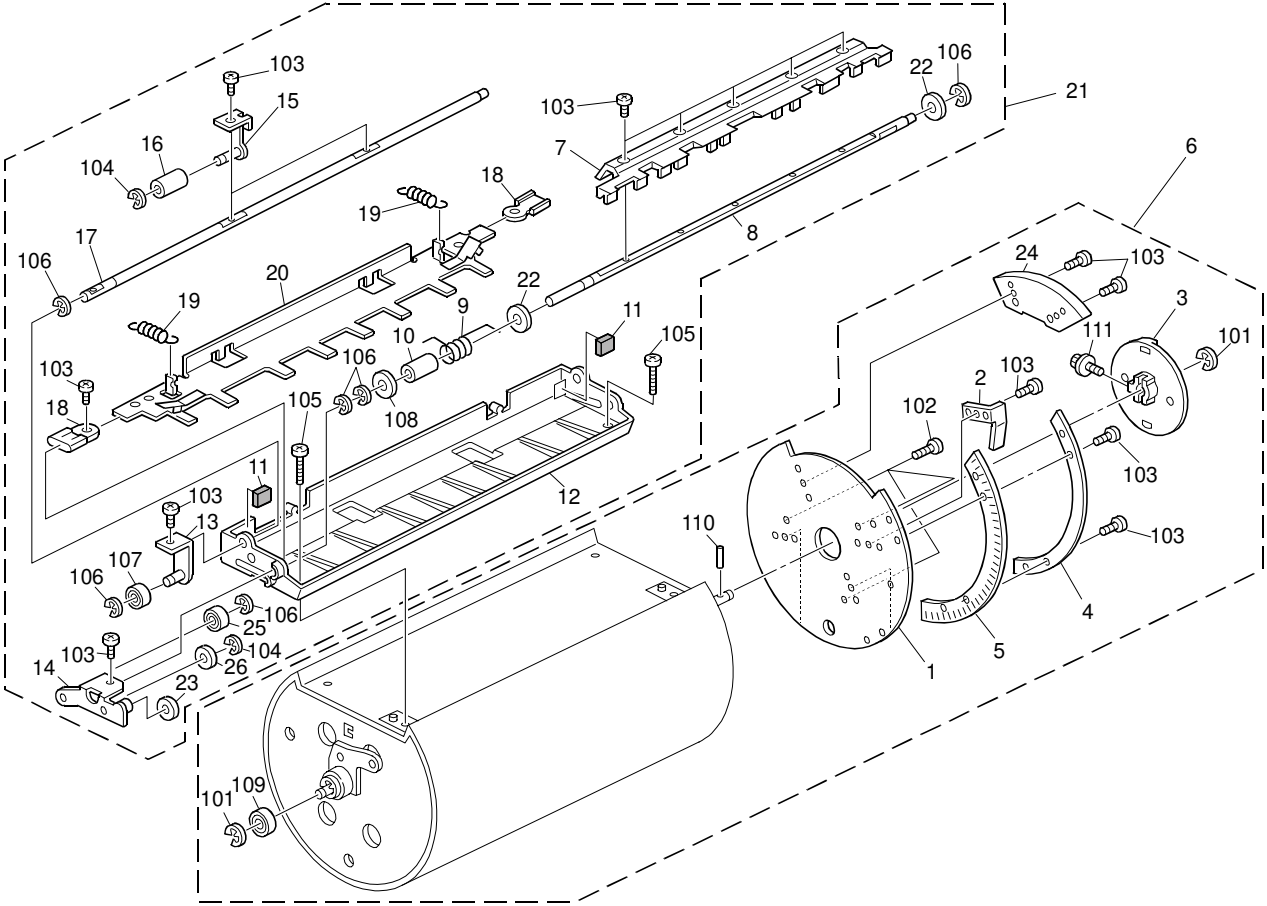

17.Pressure Cylinder 1

Index No.	Part No.	Description	Q'ty Per Assembly
1	C244 3092	PLATE:ENCODER:FRONT	1
2	C244 3096	SHIELDING PLATE:PAPER FEED CONTROL	1
3	C229 3196	JOINT FLANGE	1
4	C244 3094	PLATE:ENCODER:REAR	1
5	C244 3093	PAPER FEED CONTROL ENCODER 450PUL	1
6	C265 3001	PRESS DRAM UNIT:ASS'Y	1
7	C257 3243	CLAMP	1
8	C257 3245	CLAMP SHAFT	1
9	C244 3244	SPRING:CLAMP:4N	1
10	C236 3238	COLLAR 6X8X12.5	1
11	C257 3239	CUSHION	2
12	C257 3264	CLAMP BASE	1
13	C244 3261	ARM:PAWL:ASS'Y	1
14	C257 3256	CLAMP ARM	1
15	C244 3252	GUIDE:DRIVE:PAWL:EXHAUST:ASS'Y	2
16	AA13 2115	COLLAR - CAM FOLLOWER	2
17	C265 3251	SHAFT:PAWL:EXHAUST	1
18	C236 3248	SLIDER EXIT PAWL	2
19	C257 3249	TENSION SPRING	2
20	C244 3310	PAWL:EXHAUST:CLAMP:PEEN	1
21	**C257 3002**	**CLAMP**	**1**
22	C236 3237	COLLAR 6X11.2X1.5	2
23	C257 3260	COLLAR	1
24	C257 3096	PAPER FEED CONTROL SHIELDING PLATE	1
25	C236 3259	BALL BEARING-5X11X4	1
26	5446 3108	SPACER - 1.5X4.2X11MM	1

Index No.	Part No.	Description	Q'ty Per Assembly
101	0720 0080E	RETAINING RING - M8	
102	0354 0080N	SCREW:M4X8	
103	0353 0060N	BIND SCREW - M3X6	
104	0720 0030E	RETAINING RING - M3	
105	0354 0140N	SCREW M4X14	
106	0720 0040E	RETAINING RING - M4	
107	0740 3505	BEARING	
108	0807 4069	WASHER - 6.2X12X0.4MM	
109	0740 3010	BALL BEARING - 10X26X8MM	
110	0624 0200E	SPRING PIN - 4X20MM	
111	0451 4008N	TAPPING SCREW:4X8	

18.Pressure Cylinder 2

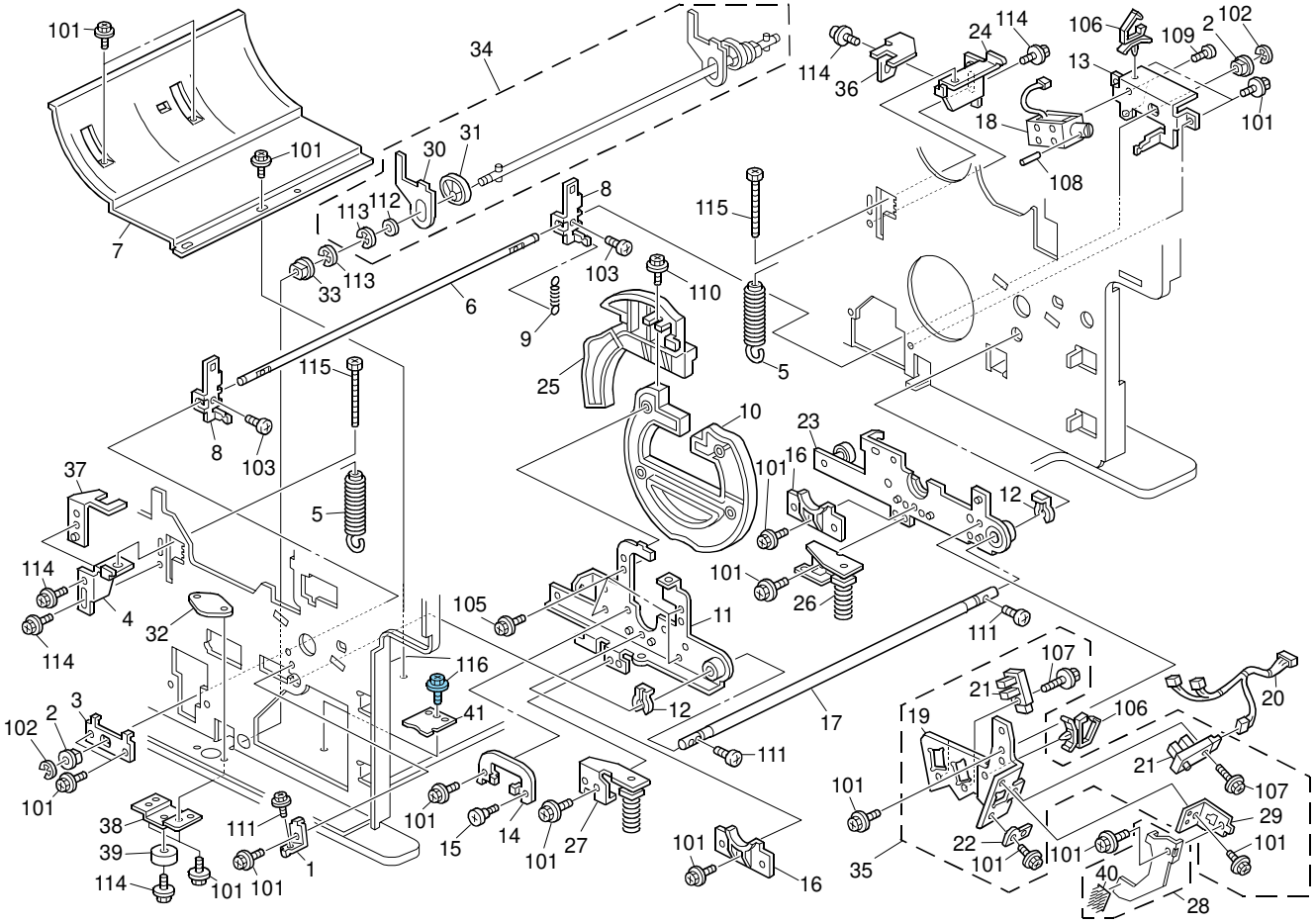

18.Pressure Cylinder 2

Index No.	Part No.	Description	Q'ty Per Assembly
1	C244 3206	STOPPER:CONTACT POINT	1
2	5053 0447	BUSHING - 6MM	2
3	C244 3161	BRACKET:PRESSURE RELEASE:FRONT	1
4	C244 3281	BRACKET:PRESSURE:SPRING:FRONT	1
5	C265 3270	ADJUSTING SCREW:M8:ASS'Y	2
6	C265 3165	SHAFT:PRESSURE RELEASE	1
7	C257 3952	SENSOR GUIDE PLATE	1
8	C229 3164	RELEASE SHAFT ARM	2
9	C265 3166	SPRING:PRESSURE RELEASE	1
10	C257 3267	CLAMPCAM - LARGE	1
11	C257 3220	ARM - FRONT	1
12	C229 3207	RING - M14	2
13	C244 3163	BRACKET:PRESSURE RELEASE:REAR	1
14	C244 3226	STOPPER:BEARING:PRESS DRAM UNIT:FRONT	1
15	AA14 3562	SCREW:M4:DIA6X1.2	1
16	C229 3227	PRESSURE CYLINDER SHAFT GUIDE	2
17	C244 3205	SHAFT:CONTACT POINT	1
18	C257 5872	DC SOLENOID	1
19	C244 3090	FEED ENCODERBRAKET	1
20	C280 5226	HARNESS:REGISTRATION:ENCODER:0ANG:ASS'Y	1
21	C244 5805	PHOTOINTERRUPTOR	2
22	C244 3091	PAPER FEED CONTROL GUIDE	1
23	C257 3230	ARM - REAR	1
24	C244 3282	BRACKET:PRESSURE:SPRING:REAR	1
25	C257 3269	CLAMP CAM - SMALL	1
26	C257 3356	ADJUSTING SCREW - REAR	1
27	C257 3355	ADJUSTING SCREW - FRONT	1
28	**C257 3370**	**CLEANER BRACKET**	**1**
29	C257 3368	BRACKET BASE	1
30	C257 3342	SLIDER PRESSURE PLATE	2
31	C257 3341	PRESSURE CAM	2
32	C262 1053	COVER:SAFETY:BASE	1
33	5053 0419	BUSHING - 10MM	1
34	C257 3331	PRESSURE SHAFT	1

Index No.	Part No.	Description	Q'ty Per Assembly
35	C257 3235	PAPER FEED CONTROL SENSOR ASS'Y	1
36	C259 3279	ADJUSTING STOPPER - REAR	1
37	C259 3278	ADJUSTING STOPPER - FRONT	1
38	C262 1061	STAND:BASE	1
39	AH01 0008	STAND:MM24	1
40	C257 3372	CLEANING BRACH	1
101	0451 4006N	TAPPING SCREW - 4X6	
102	0720 0040E	RETAINING RING - M4	
103	0353 0060N	BIND SCREW - M3X6	
105	0450 4008N	TAPPING SCREW - M4X8	
106	1105 0511	HARNESS CLAMP - LWS-0306ZC	
107	0451 4010N	TAPPING SCREW:4X10	
108	0623 0140E	SPRING PIN - 3X14MM	
109	0353 0040N	SCREW - M3X4	
110	0451 3008N	TAPPING SCREW - M3X8	
111	0354 0060N	SCREW-M4X6	
112	0807 7092	SPACER - 10.5/16	
113	0720 0080E	RETAINING RING - M8	
114	0451 4008N	TAPPING SCREW:4X8	
115	0586 0451N	HEXAGONAL HEAD BOLT M6X45	
116	0454 4006Q	TAPPING SCREW:4X6	

19.Pressure Cylinder 3

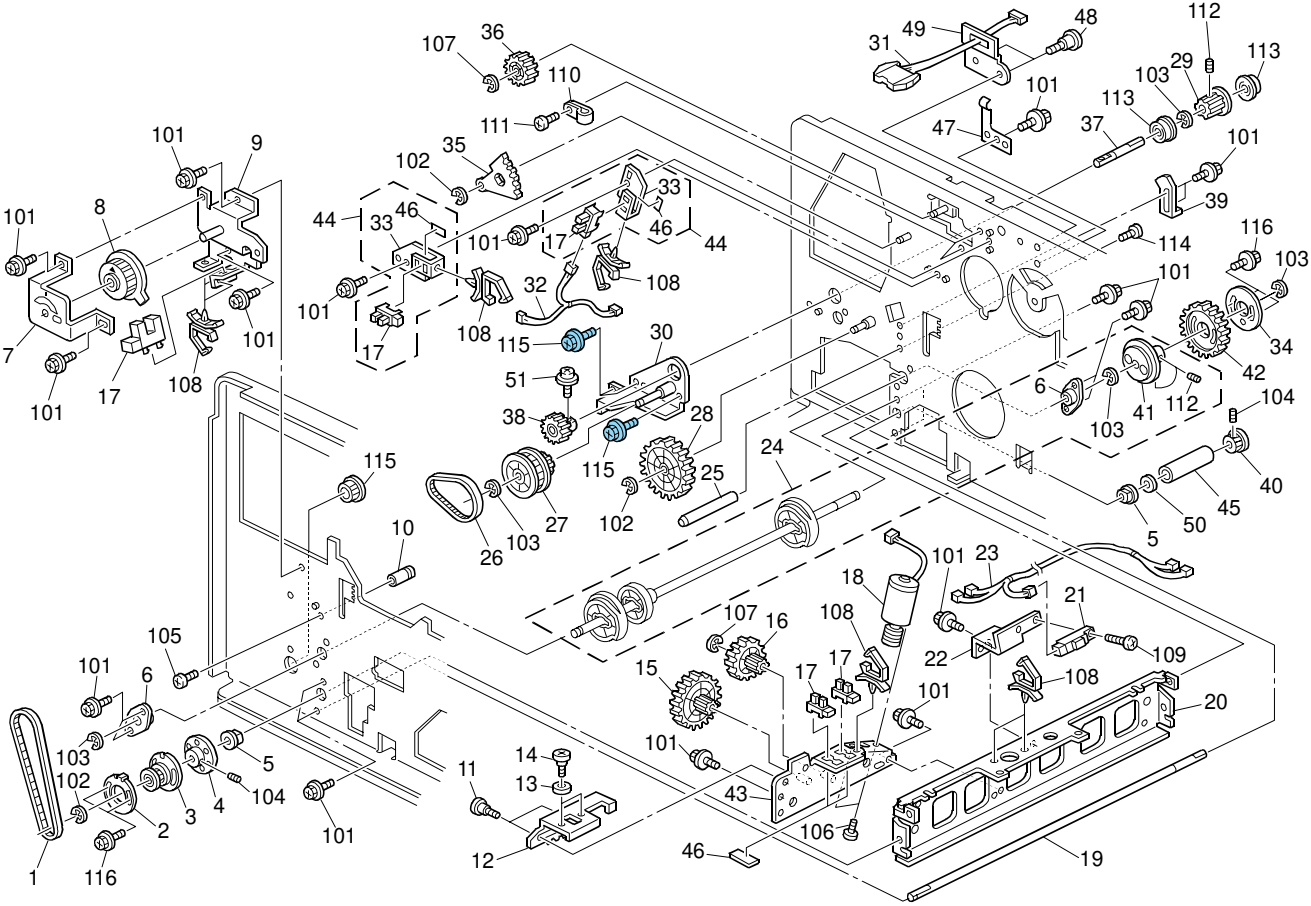

19.Pressure Cylinder 3

Index No.	Part No.	Description	Q'ty Per Assembly
1	C229 1163	TIMING BELT - S3M118Z	1
2	C244 1162	PULLEY SPACER	1
3	C229 1161	DIAL DRIVE PULLEY - 20Z	1
4	C229 1160	DIAL ADJUSTER	1
5	5304 1639	BUSHING - 8MM	2
6	C229 3135	BUSHING - CAM SHAFT	1
7	C262 1170	COVER:DIAL:PRINTING	1
8	C244 1167	PULLEY:DRIVEN:ASS'Y	1
9	C244 1164	BRACKET DIAL ASS'Y	1
10	C244 1082	SHAFT:HALE UNIT:FRONT	1
11	C244 4426	SHOULDER SCREW	2
12	C262 3143	RACK:PRESSURE RELEASE ASS'Y	1
13	C229 3148	BUSHING	2
14	AA14 3718	STEPPED SCREW - M4	2
15	C229 3146	GEAR - 80Z/16Z	1
16	C229 3145	WORM WHEEL - 50Z/16Z	1
17	AW02 0203	PHOTOINTERRUPTOR:GP1A173LCS2F	5
18	C259 5804	DC MOTOR:2.0W:MM32	1
19	C265 1043	SHAFT:STAY:LEFT:MIDDLE	1
20	C244 1075	STAY:LEFT	1
21	C257 5807	PHOTO REFIECTION SENSOR:GP2A25	1
22	C244 3951	LOWER PAPER EXIT SENSOR BRACKET	1
23	C280 5262	HARNESS:CHANGE:ASS'Y	1
24	C257 3125	CAM SHAFT	1
25	C229 1083	REAR GUIDE SHAFT	1
26	C229 1139	TIMING BELT - S2M190	1
27	C229 3961	DRIVE PULLEY	1
28	C229 3966	DRIVE GEAR	1
29	C229 1136	TIMING PULLEY - JOB SEPARATOR	1
30	C244 3930	GUIDE PLATE:HALE UNIT:ASS'Y	1
31	C280 5246	HARNESS:DRUM:CONNECTING:MAIN:ASS'Y	1
32	C280 5224	HARNESS:DRUM:HP:ASS'Y	1
33	C244 2631	LIMIT SENSOR BRACKET	1
34	C244 3195	SPACER:GEAR	1

Index No.	Part No.	Description	Q'ty Per Assembly
35	C229 3585	SECTOR GEAR	1
36	C229 3586	DRIVEN GEAR	1
37	C233 1138	DRIVE SHAFT	1
38	C229 1137	DRIVE RELAY GEAR	1
39	C244 3976	STOPPER:LEVER:PAWL:MOVEABLE	1
40	C229 1155	DRIVEN SHAFT GEAR	1
41	C229 3133	CONTROL PLATE - CAM DRIVE	1
42	C229 3194	PRESSURE CYLINDER GEAR	1
43	C265 3150	BRACKET:EXCHANGE PLATE:ASS'Y	1
44	C280 1071	DRUM:HOME POSITION SENSOR:ASS'Y	2
45	C244 1044	SPACER	1
46	H522 1100	SENSOR GUIDE	4
47	C257 2612	SPRING PLATE	1
48	C244 2633	STEPPED SCREW	2
49	C257 2611	CONNECTOR BRACKET	1
50	C257 7055	WASHER:DIA8.1XDIA11.5X1T	1
51	C244 2452	SCREW M4X8	1
101	0451 4006N	TAPPING SCREW - 4X6	
102	0720 0060E	RETAINING RING - M6	
103	0720 0080E	RETAINING RING - M8	
104	0574 0050E	HEXAGON HEADLESS SET SCREW - M4X5	
105	0354 0060N	SCREW-M4X6	
106	0353 0040N	SCREW - M3X4	
107	0720 0040E	RETAINING RING - M4	
108	1105 0511	HARNESS CLAMP - LWS-0306ZC	
109	0353 0060N	BIND SCREW - M3X6	
110	1105 0005	NYLON CLAMP - 3N	
111	0453 4006N	BINDING SELF TAPPING SCREW:4X6	
112	0574 0040E	HEXAGON HEADLESS SET SCREW - M4X4	
113	0805 3205	BALL BEARING - 10X19X7MM	
114	0451 4008N	TAPPING SCREW:4X8	
115	0454 4006Q	TAPPING SCREW:4X6	

20.Paper Exit Section 1

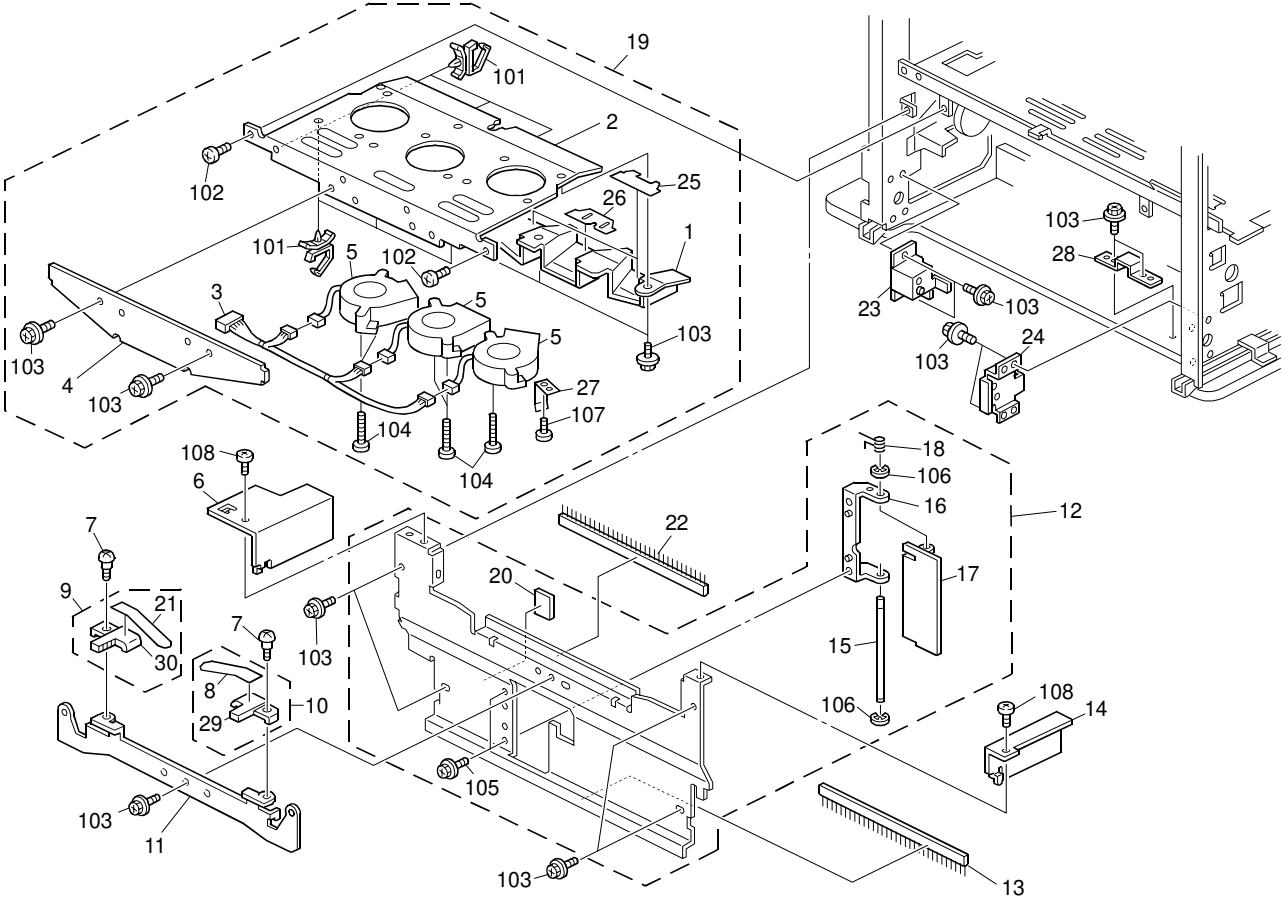

20.Paper Exit Section 1

Index No.	Part No.	Description	Q'ty Per Assembly
1	C257 3302	AIR KNIFE DUCT	1
2	C257 3301	AIR KNIFE BASE	1
3	C280 5234	HARNESS:AIR KNIFE:ASS'Y	1
4	C262 3303	COVER:EXIT	1
5	C257 5824	FAN DC24V 0.85A	3
6	C262 3857	DRUM STAY:LEFT:EXIT	1
7	C218 2525	STEPPED SCREW - M4	2
8	C235 4492	RIGHT FRONT PAPER GUIDE	1
9	C239 4492	PAPER GUIDE - REAR	1
10	C239 4491	PAPER GUIDE - FRONT	1
11	C233 4446	ADJUSTING PLATE - BASE	1
12	C262 1292	DRUM STAY:EXIT:ASS'Y	1
13	C233 4405	ANTISTATIC BRUSH	1
14	C262 3858	DRUM STAY:RIGHT:EXIT	1
15	C229 4675	SEPARATOR COVER SHAFT	1
16	C244 4674	SEPARATOR COVER HINGE	1
17	C239 4673	SEPARATOR COVER	1
18	C265 4676	SPRING:COVER:ASSORTMENT	1
19	C280 3008	SEPARATION UNIT:EXIT:ASS'Y	1
20	C244 4677	CUSHION	1
21	C235 4494	RIGHT REAR PAPER GUIDE	1
22	C235 4495	ANTISTATIC BRUSH	1
23	C239 4404	REAR EXIT BRACKET	1
24	C239 4401	FRONT EXIT BRACKET	1
25	C257 3305	AIR KNIFE DUCT SHEET - SIDE	2
26	C257 3304	AIR KNIFE DUCT SHEET- MIDDLE	1
27	C259 3302	AIR KNIFE SPRING PLATE	1
28	C262 1062	STOPPER:ADJUSTING SCREW	2
29	C239 4493	BASE:GUIDE:EXIT:RIGHT FRONT	1
30	C239 4497	BASE:GUIDE:EXIT:RIGHT REAR	1

Index No.	Part No.	Description	Q'ty Per Assembly
101	1105 0511	HARNESS CLAMP - LWS-0306ZC	
102	0453 4006N	BINDING SELF TAPPING SCREW:4X6	
103	0451 4006N	TAPPING SCREW - 4X6	
104	0354 0350N	SCREW M4X35	
105	0451 3006N	TAPPING SCREW - 3X6	
106	0720 0020E	RETAINING RING - M2	
107	0353 0040N	SCREW - M3X4	
108	0353 0060N	BIND SCREW - M3X6	

21.Paper Exit Section 2

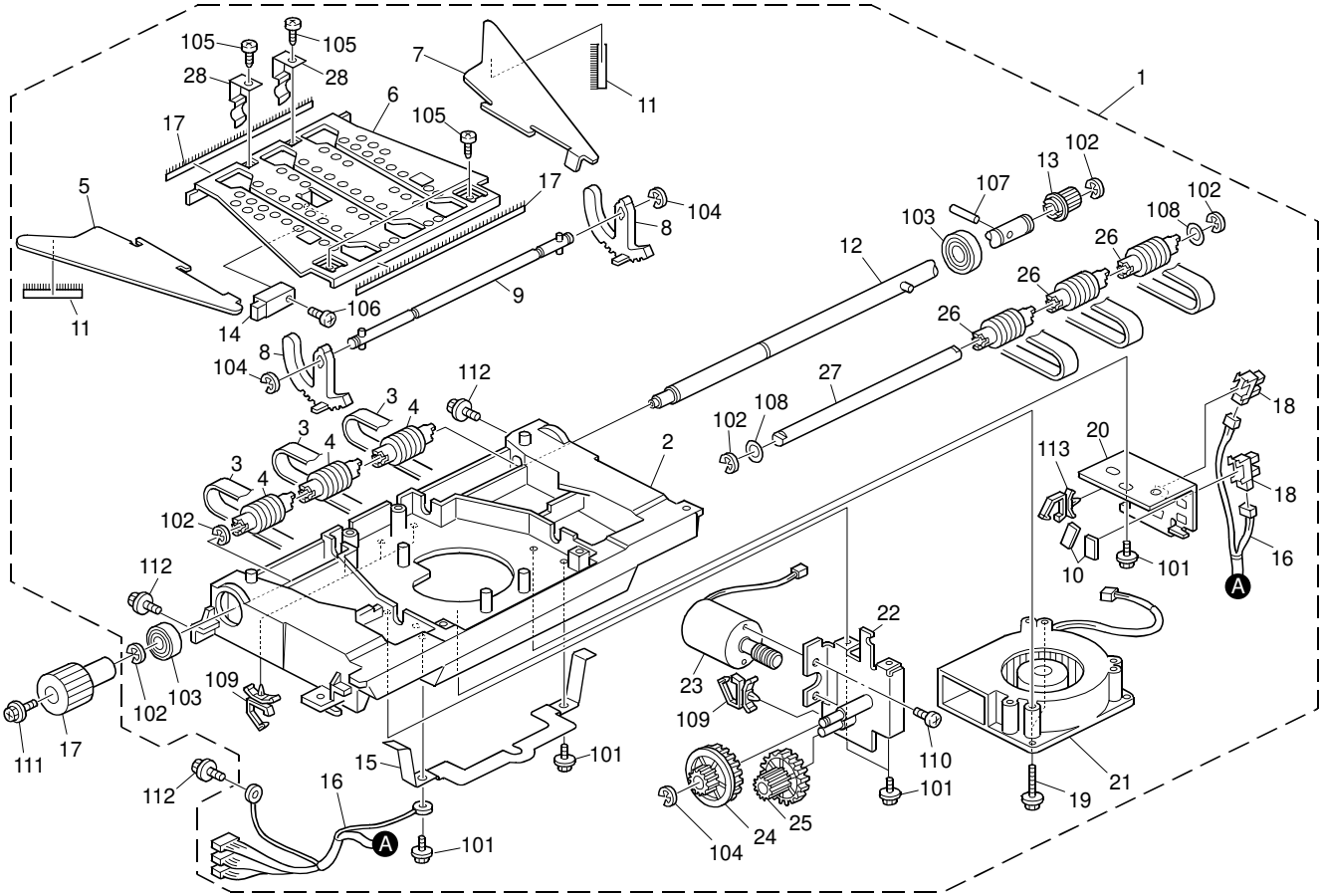

21.Paper Exit Section 2

Index No.	Part No.	Description	Q'ty Per Assembly
1	C280 4005	HALE UNIT:ASS'Y	1
2	C257 4101	PAPER EXIT UNIT DUCT	1
3	C229 3874	TRANSPORT BELT	3
4	C593 4105	CENTER ROLLER - DELIVERY TABLE	3
5	C593 4106	FRONT VACUUM PLATE	1
6	C257 3851	DRUM STAY	1
7	C593 4107	REAR VACUUM PLATE	1
8	C244 3912	VACUUM PLATE GUIDE ARM	2
9	C639 4109	SHAFT:ADJUSTING PLATE:HALE:ASS'Y	1
10	H522 1100	SENSOR GUIDE	2
11	C233 3902	DISCHARGE BRUSH - ADJUSTING PLATE	2
12	C639 4115	SHAFT:DRIVE:HALE UNIT:ASS'Y	1
13	C229 3872	TIMING PULLEY	1
14	AW01 0109	PHOTO REFIECTION SENSOR:PS117ED1	1
15	C593 4112	GROUNDING PLATE	1
16	C280 5222	HARNESS:HALE:ASS'Y	1
17	C229 3878	KNOB	1
18	AW02 0203	PHOTOINTERRUPTOR:GP1A173LCS2F	2
19	C244 4111	TAPPING SCREW	2
20	C593 4108	WING POSITION SENSOR BRACKET	1
21	C259 5824	FAN:DC24V:0.5A	1
22	C244 3913	BRACKET:ADJUSTING PLATE:DRIVE:ASS'Y	1
23	C259 5804	DC MOTOR:2.0W:MM32	1
24	C229 3911	GEAR - 25Z/51Z	1
25	C229 3145	WORM WHEEL - 50Z/16Z	1
26	C593 4104	TRANSPORT BELT ROLLER	3
27	C639 4103	SHAFT:DRIVEN:HALE UNIT	1
28	C593 4113	GROUNDING PLATE	2

Index No.	Part No.	Description	Q'ty Per Assembly
101	0450 4008N	TAPPING SCREW - M4X8	
102	0720 0080E	RETAINING RING - M8	
103	0740 3010	BALL BEARING - 10X26X8MM	
104	0720 0040E	RETAINING RING - M4	
105	0452 3006N	BINDING SELF-TAPPING SCREW:3X6	
106	0353 0120N	SCREW M3X12	
107	0623 0140E	SPRING PIN - 3X14MM	
108	0807 7013	SPACER - 10.2X14X0.2 MM	
109	1105 0534	CLAMP	
110	0353 0040N	SCREW - M3X4	
111	0451 4006N	TAPPING SCREW - 4X6	
112	0451 4008N	TAPPING SCREW:4X8	
113	1105 0511	HARNESS CLAMP - LWS-0306ZC	

22.Paper Exit Section 3

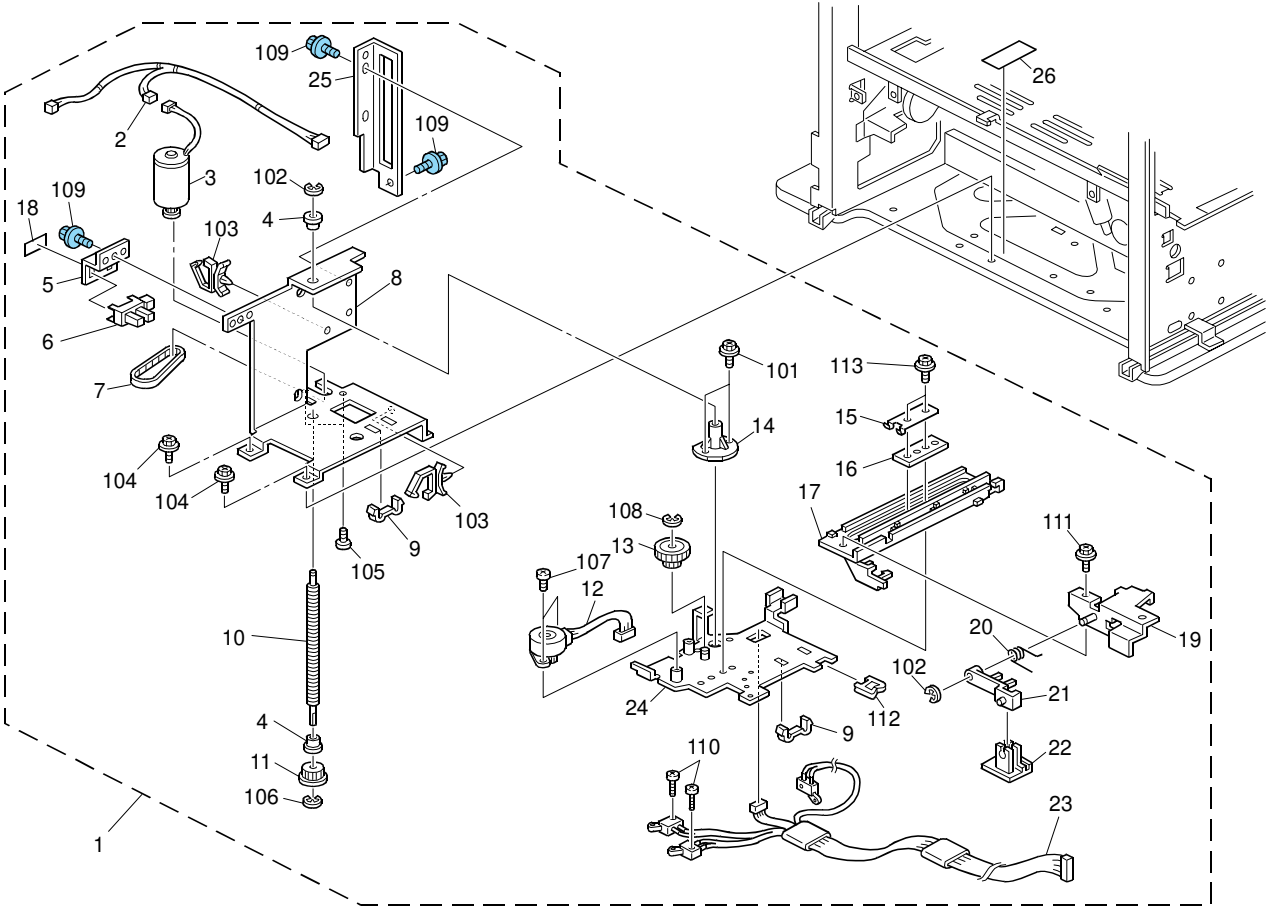

22.Paper Exit Section 3

Index No.	Part No.	Description	Q'ty Per Assembly
1	C280 4660	ASSORTMENT:MACHINE OR COPIER:ASS'Y	1
2	C280 5269	HARNESS:ASSORTMENT:SENSOR:ASS'Y	1
3	C259 5823	DC MOTOR:2.0W:MM32:PULLEY	1
4	5324 1658	BUSHING- 4X8X4.5MM	2
5	C244 4671	BRACKET:PHOTOINTERRUPTOR:ASSORTMENT	1
6	AW02 0203	PHOTOINTERRUPTOR:GP1A173LCS2F	1
7	B830 3504	TIMING BELT - 40S2M100	1
8	C244 4701	BRACKET:BASE:ASSORTMENT	1
9	C229 4724	HARNESS CLAMP	2
10	C229 4708	SCREW SHAFT	1
11	C229 4711	TIMING PULLEY	1
12	C259 5805	STEPPER MOTOR:MM25:24V	1
13	C229 4715	SLIDE DRIVE GEAR	1
14	C229 4709	SCREW SHAFT BOSS	1
15	C229 4734	SLIDER SPRING PLATE	1
16	C229 4718	SLIDER HOLDER	1
17	C229 4725	SEPARATOR SLIDER	1
18	H522 1100	SENSOR GUIDE	1
19	C229 4726	SEPARATOR ARM LINK	1
20	C265 4733	SPRING:PRESSURE:PICKUP:ASSORTMENT	1
21	C229 4729	SEPARATOR ARM	1
22	C244 4730	PRESSURE STAND:PICKUP:MOVEABLE: ADHESION	1
23	C280 5270	HARNESS:ASSORTMENT:ASS'Y	1
24	C244 4703	BRACKET:RISE:ASSORTMENT:PEEN	1
25	C244 4702	SUPPORTING PLATE:GUIDE:BRACKET:RISE	1
26	C233 4655	HARNESS COVER SHEET	1

Index No.	Part No.	Description	Q'ty Per Assembly
101	0451 3006N	TAPPING SCREW - 3X6	
102	0720 0030E	RETAINING RING - M3	
103	1105 0511	HARNESS CLAMP - LWS-0306ZC	
104	0451 4006N	TAPPING SCREW - 4X6	
105	0353 0040N	SCREW - M3X4	
106	0720 0020E	RETAINING RING - M2	
107	0352 5050N	SCREW M2.5X5	
108	0720 0040E	RETAINING RING - M4	
109	0454 3006Q	TAPPING SCREW - M3X6	
110	0241 6060N	PAN HEAD SCREW M1.6X6	
111	0450 3006N	TAPPING SCREW - M3X6	
112	1105 0551	CLAMP:LES-0505	
113	0451 3008N	TAPPING SCREW - M3X8	

23.Drum Unit 1

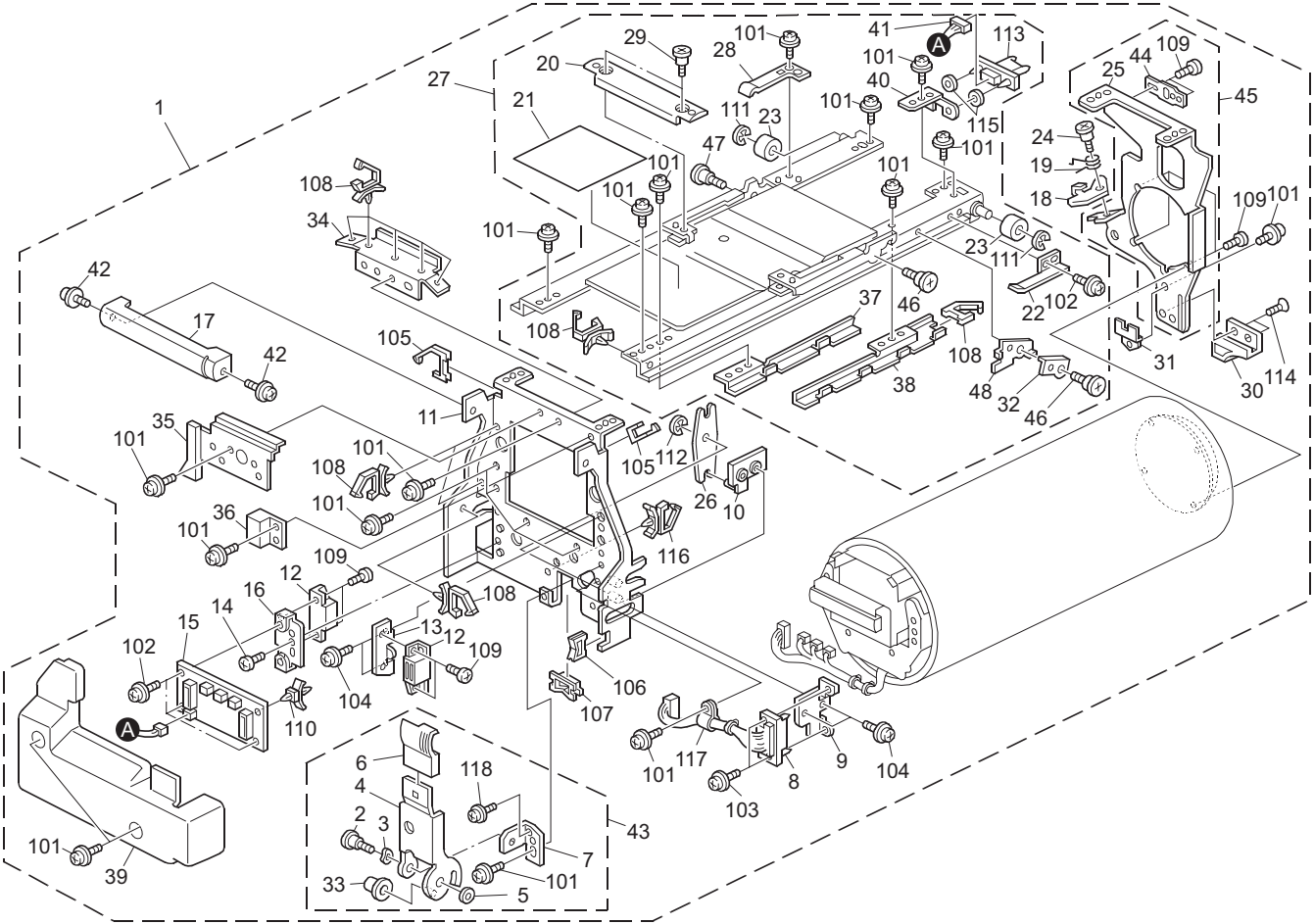

23.Drum Unit 1

Index No.	Part No.	Description	Q'ty Per Assembly
1	C280 2339	DRUM:ASS'Y	1
2	C244 2453	LEVER SCREW	1
3	C217 5102	SPRING WASHER	1
4	C262 2367	LEVER:SWITCH:PEEN	1
5	AA13 2080	SPACER - CLEANING BRUSH	1
6	C244 2357	SWITCH LEVER KNOB	1
7	C244 2365	LEVER SWITCH BRACKET	1
8	C229 5212	INK SENSOR HARNESS	1
9	C244 2360	CONNECTOR BRACKET	1
10	C236 2359	CONNECTOR SLIDER	1
11	C265 2351	SIDE PLATE:FRONT:ASS'Y	1
12	AG07 0504	MAGNET CATCH:44.1N	2
13	C244 2377	MAGNET CATCH BRACKET	1
14	5875 2088	SHOULDER SCREW - M4	1
15	C257 5140	INK SENSOR PCB	1
16	C244 2353	FRONT MAGNET CATCH BRACKET	1
17	C244 2362	DRUM RELEASE GRIP	1
18	C229 2405	DRUM STOPPER ARM	1
19	C229 2406	DRUM LOCK SPRING	1
20	C244 2385	GRIP RAIL	1
21	C229 2399	DECAL - DRUM OPERATION	1
22	C229 2396	SPRING PLATE	1
23	C201 4604	DRUM RAIL ROLLER	2
24	C244 2413	DRUM LOCK SCREW	1
25	C269 2401	SIDE PLATE:REAR:LARGE:T	1
26	C236 2608	SWITCH ARM	1
27	C257 2313	DRUM RAIL	1
28	C229 2394	SPRING PLATE	1
29	C244 5125	STEPPED SCREW - M6	2
30	C233 2645	REAR DRUM FRAME STAND	1
31	C244 2644	REAR SIDE PLATE	1
49	C229 2392	STOPPER GUIDE	1
33	C236 2370	LEVER COLLAR	1
34	C257 2353	FRONT HARNESS COVER	1

Index No.	Part No.	Description	Q'ty Per Assembly
35	C257 2354	FRONT HARNESS COVER	1
36	C257 2358	SMALL FRONT COVER	1
37	C257 2371	COVER:HARNESS:NO.2	1
38	C257 2370	COVER:HARNESS:NO.1	1
39	C262 2364	INNER COVER:FRONT	1
40	C257 2388	BRACKET:CONNECTOR:DRUM	1
41	C280 5229	HARNESS:DRUM:ID:CONNECTING:ASS'Y	1
42	C244 2452	SCREW M4X8	2
43	C262 2355	GRIP:LEVER:ASS'Y	1
44	C269 2402	GUIDE:SIDE PLATE:REAR:DRUM	1
45	C265 2401	SIDE PLATE:REAR:LARGE:ASS'Y	1
46	C244 2390	SCREW:STOPPER:DRUM	1
47	C244 2451	SCREW:TRANSFER/SEPARATION	1
48	C229 2391	STOPPER BRACKET	1
101	0951 4006Z	PHILIPS SCREW WITH FLAT WASHER - M4	
102	0951 3006Z	PHILIPS SCREW WITH FLAT WASHER - M3	
103	0951 3008Z	PHILIPS SCREW WITH FLAT WASHER - M3	
104	0951 4008Z	PHILIPS SCREW WITH FLAT WASHER - M4X8	
105	1105 0551	CLAMP:LES-0505	
106	1105 0329	CLAMP - ES-0510	
107	1105 0724	CLAMPS:WES-1210	
108	1105 0511	HARNESS CLAMP - LWS-0306ZC	
109	0353 0060N	BIND SCREW - M3X6	
110	1105 0193	NYLON STUD	
111	0720 0040G	RETAINING RING - M4	
112	0720 0050G	RETAINING RING - M5	
113	1102 9861	DRAWER CONNECTOR	
114	0323 0060N	SCREW M3X6	
115	0708 0050N	WASHER DIA5	
116	1105 0487	HARNESS CLAMP	
117	1105 0016	NYLON CLAMP - 4N	
118	0951 3004Z	PHILIPS SCREW WITH FLAT WASHER-M3X4	

24.Drum Unit 2

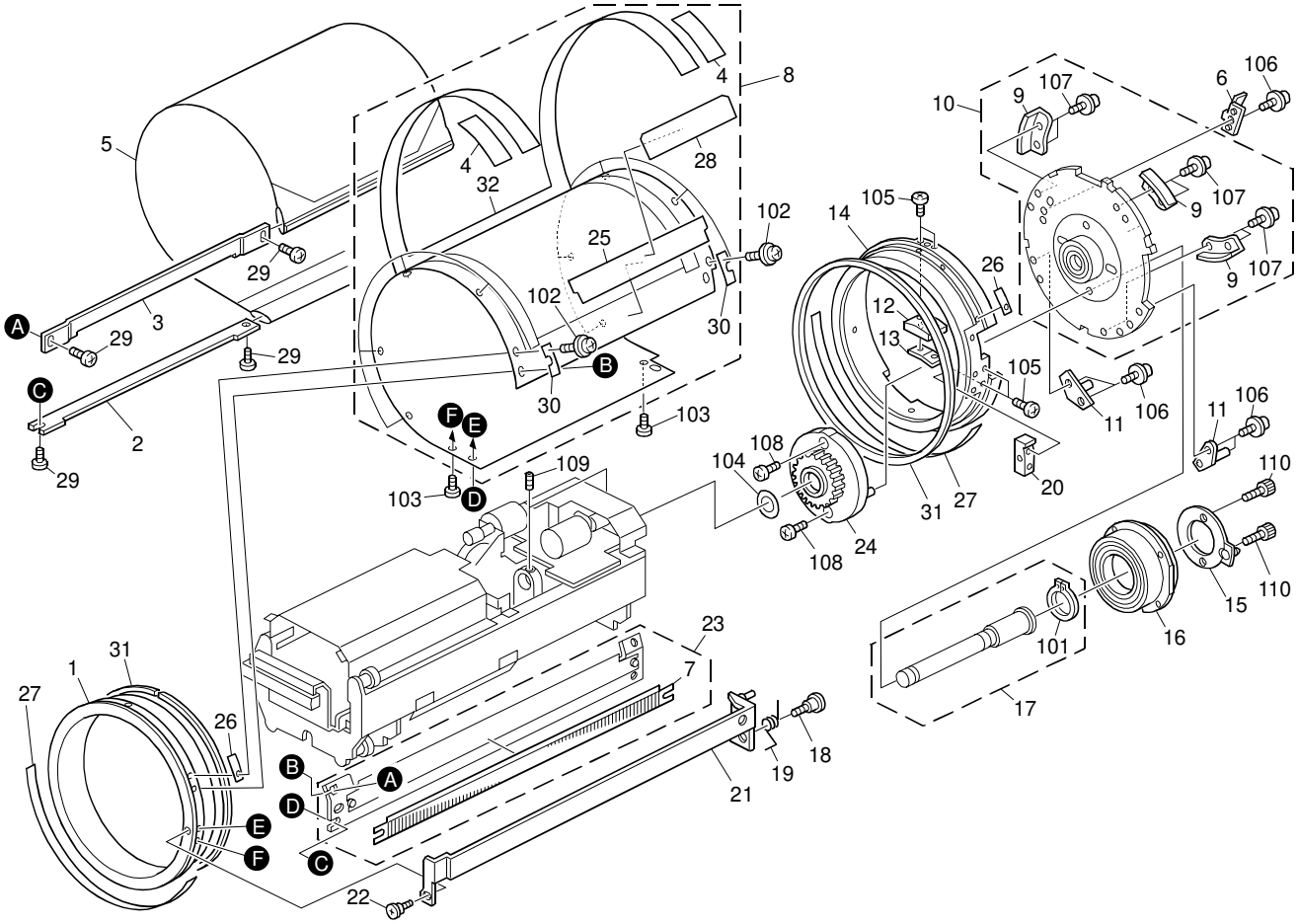

24.Drum Unit 2

Index No.	Part No.	Description	Q'ty Per Assembly
1	C262 2420	FLANGE:OUTER:FRONT:S	1
2	C257 2594	SCREEN STAY - REAR H	1
3	C259 2595	STAY:SCREEN:ASS'Y	1
4	C257 2478	DRAM METAL SCREEN SEAL	2
5	**C257 2316**	**SHIELD SCREEN ASS'Y**	**1**
6	C244 2434	SHIELDING PLATE	1
7	C229 2605	CLAMPER SEAL	1
8	C262 2657	DRAM METAL SCREEN:DRUM:DLT:S:SUB-ASS'Y	1
8	C262 2482	DRUM METAL SCREEN:DRUM:S:SUB-ASS'Y	1
8	C630 2497	DRUM METAL SCREEN:DRUM:A4:SUB-ASS'Y	1
9	C229 2428	SLIDER	3
10	C244 2419	FLANGE:DRUM:REAR:INNER:ASS'Y	1
11	C244 2431	DRUM POSITIONING PIN	2
12	C229 2423	FIXING PLATE	1
13	C244 2424	PLATE NUT	1
14	C262 2422	FLANGE:OUTER:REAR	1
15	C257 2410	DRUM DRIVE DISK	1
16	C262 2442	FIX STAND:DRUM:REAR:SUB-ASS'Y	1
17	C229 2647	DRUM SHAFT	1
18	C244 2450	POSITIONING PIN DIA5M4	1
19	C265 2596	SPRING:CLAMP:OPEN AND CLOSE	1
20	C236 2595	CLAMP PROTECTION	1
21	C262 2590	CLAMP:ASS'Y	1
22	C244 2601	FRONT STEPPED SCREW	1
23	C257 2591	CLAMP BASE ASS'Y	1
24	C229 2435	DRIVE GEAR - 50Z	1
25	C257 2479	FRONT DRAM METAL SCREEN SHIELD	1
26	C257 2423	DRAM METAL SCREEN SPACER	2
27	C257 2424	DRAM METAL SCREEN SPACER	2
28	C236 2498	DRUM METAL SCREEN SHIELD	1
29	C262 2452	SCREW:WASHER:M4X8	4
30	C262 2620	SPACER:CLAMP:DRUM	2
31	C262 2477	SEAL:FLANGE:REAR	2
32	C262 2658	SEAL:DRAM METAL SCREEN:DLT:SUB-ASS'Y	1

Index No.	Part No.	Description	Q'ty Per Assembly
32	C262 2484	SHIELD:DRUM METAL SCREEN:SUB-ASS'Y	1
32	C630 2496	SHIELD:DRAM METAL SCREEN:A4:SUB-ASS'Y	1
101	0725 0170E	RETAINING RING C - M17	
102	0951 3004Z	PHILIPS SCREW WITH FLAT WASHER-M3X4	
103	0354 0040N	SCREW-M4X4	
104	0807 7114	WASHER - 16X24X0.3MM	
105	0353 0120N	SCREW M3X12	
106	0951 4006Z	PHILIPS SCREW WITH FLAT WASHER - M4	
107	0951 4008Z	PHILIPS SCREW WITH FLAT WASHER - M4X8	
108	0314 0080Z	PHILIPS SCREW - 4X8	
109	0574 0040E	HEXAGON HEADLESS SET SCREW - M4X4	
110	0594 0100E	SOCKET BOLT - M4X10	

25.Drum Unit 3

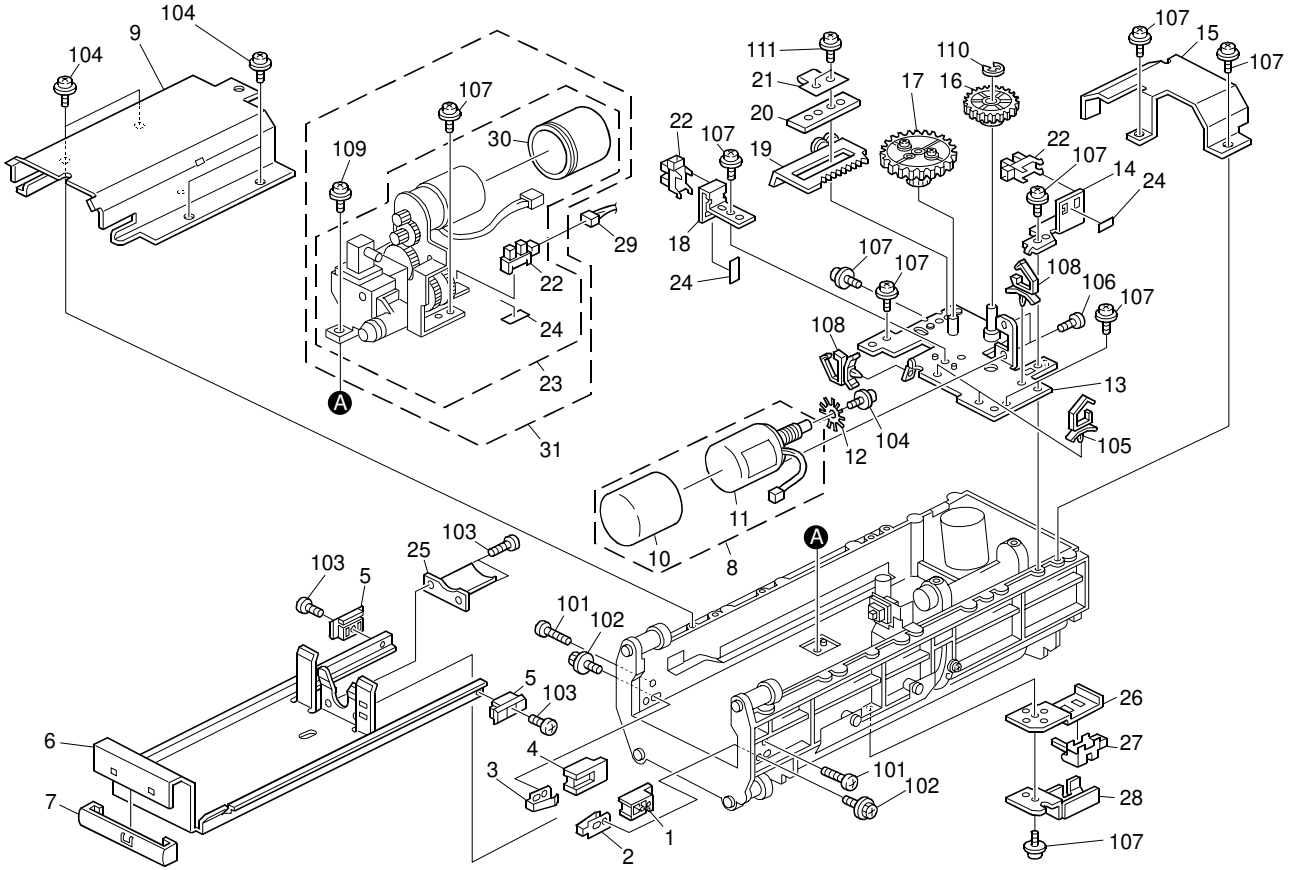

25.Drum Unit 3

Index No.	Part No.	Description	Q'ty Per Assembly
1	C229 2496	RIGHT GUIDE - SLIDE RAIL	1
2	C229 2493	RIGHT INK HOLDER	1
3	C229 2500	LEFT INK HOLDER	1
4	C229 2499	LEFT GUIDE - SLIDE RAIL	1
5	C229 2488	INK HOLDER SLIDER	2
6	C244 2484	HOLDER:INK	1
6	C244 2489	HOLDER:INK:2:ASS'Y	1
7	C244 2487	INK HOLDER KNOB	1
8	C257 2577	DC MOTOR:CAP:ASS'Y	1
9	C262 2498	COVER:INK CARTRIDGE	1
10	C236 2547	SHIFT MOTOR COVER	1
11	C259 5820	DC MOTOR:2.0W:MM32:HEAVEN AND EARTH	1
12	C229 1177	SHIFT SENSOR ENCODER	1
13	C229 2571	SHIFT MOTOR BRACKET	1
14	C229 2582	DRUM SHIFT SENSOR BRACKET	1
15	C262 2589	COVER:SENSOR:LEFT AND RIGHT:MOVE	1
16	C229 2576	WORM GEAR	1
17	C229 2624	SHIFT DRIVE GEAR	1
18	C229 2581	DRUM H.P SENSOR BRACKET	1
19	C229 2583	SLIDER	1
20	C229 2580	SLIDE FIXED PLATE	1
21	C229 2609	SPRING PLATE	1
22	AW02 0203	PHOTOINTERRUPTOR:GP1A173LCS2F	3
23	C280 2512	PUMP UNIT	1
24	H522 1100	SENSOR GUIDE	3
25	C257 2480	INK HOLDER - SMALL	1
26	C257 2491	SENSOR BRACKET	1
27	C257 5860	PHOTOINTERRUPTOR	1
28	C257 2492	SENSOR COVER	1
29	C280 5285	HARNESS:PUMP UNIT:DRUM:ASS'Y	1
30	C262 2511	CAP:PUMP MOTOR	1
31	C280 2502	DRUM:PUMP:ASS'Y	1

Index No.	Part No.	Description	Q'ty Per Assembly
101	0354 0100N	SCREW - M4X10	
102	0450 3008N	TAPPING SCREW - M3X8	
103	0353 0040N	SCREW - M3X4	
104	0951 3006Z	PHILIPS SCREW WITH FLAT WASHER - M3	
105	1105 0487	HARNESS CLAMP	
106	0353 0040N	SCREW - M3X4	
107	0951 4006Z	PHILIPS SCREW WITH FLAT WASHER - M4	
108	1105 0511	HARNESS CLAMP - LWS-0306ZC	
109	0951 4008Z	PHILIPS SCREW WITH FLAT WASHER - M4X8	
110	0720 0050G	RETAINING RING - M5	
111	0951 4010Z	PHILIPS SCREW WITH FLAT WASHER - M4	

26.Drum Unit 4

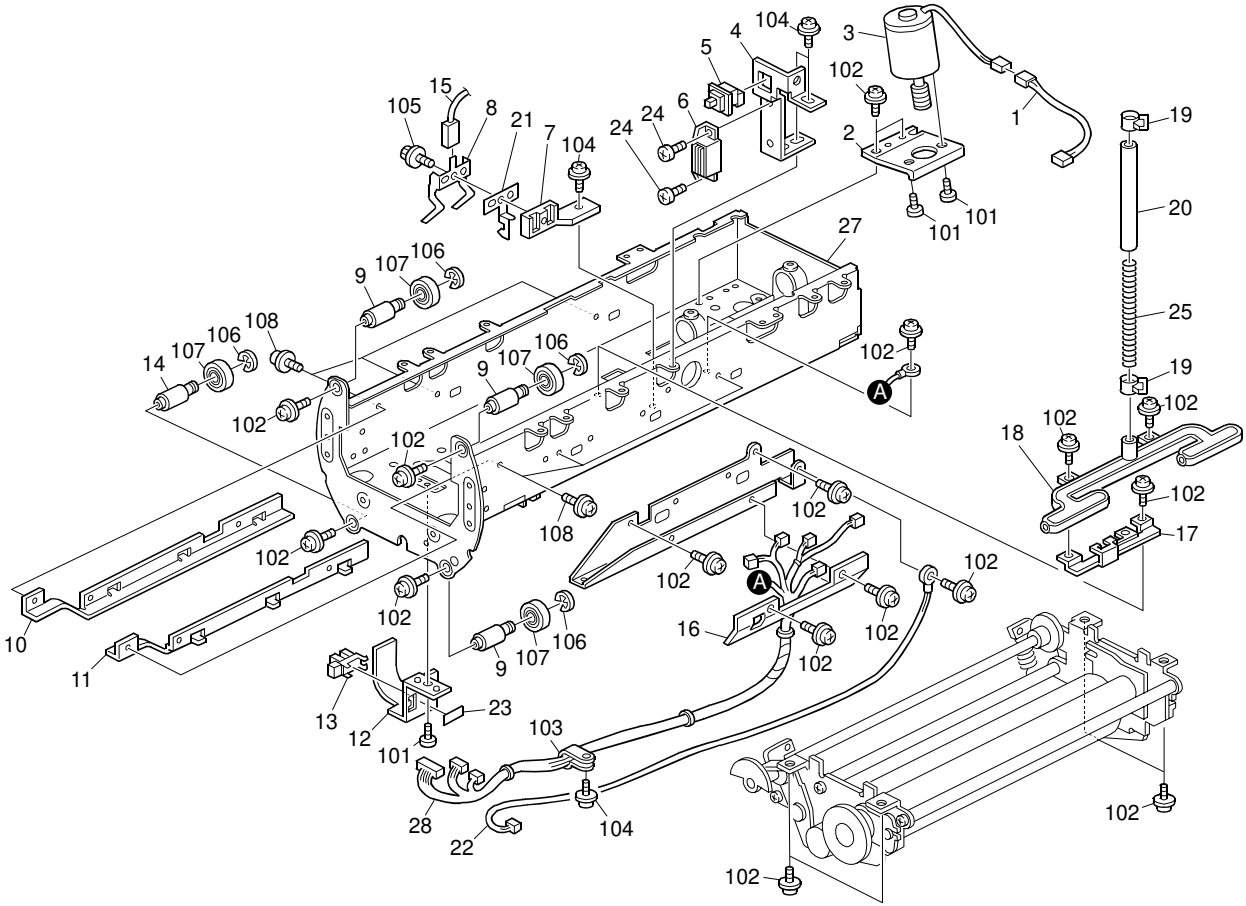

26.Drum Unit 4

Index No.	Part No.	Description	Q'ty Per Assembly
1	C280 5256	HARNESS:OIL SUPPLY ROLLER:MOTOR:ASS'Y	1
2	C229 2558	MOTOR BRACKET	1
3	C259 5804	DC MOTOR:2.0W:MM32	1
4	C229 2490	INK BOTTLE BRACKET	1
5	AW50 0012	PUSH SWITCH	1
6	AG07 0504	MAGNET CATCH:44.1N	1
7	C229 2491	INK SENSOR BRACKET	1
8	C233 2493	INK SENSOR TERMINAL	1
9	C265 2549	PIN:BALL BEARING	1
10	C244 2494	INK FRAME SLIDE RAIL - LEFT	1
11	C244 2495	INK FRAME SLIDE RAIL - RIGHT	1
12	C229 2563	SENSOR BRACKET	1
13	AW02 0203	PHOTOINTERRUPTOR:GP1A173LCS2F	1
14	C265 2550	PIN:BALL BEARING:LEFT LOWER	1
15	C280 5215	HARNESS:DRUM:ID:ASS'Y	1
16	C229 2542	HARNESS COVER	1
17	C257 2534	BRACKET	1
18	C257 2535	PIPE	1
19	C244 2530	HOSE BAND	2
20	C244 2532	INK TUBE	1
21	C233 2496	INK SENSOR TERMINAL - CENTER	1
22	C257 5865	THERMISTOR:ASS'Y	1
23	H522 1100	SENSOR GUIDE	1
24	C244 2454	SCREW M3X6	2
25	C257 2536	SPRING TUBE	1
26	C265 2547	BRACKET:HARNESS	1
27	C265 2539	FRAME:DRUM:ASS'Y	1
28	C280 5214	HARNESS:DRUM:ASS'Y	1

Index No.	Part No.	Description	Q'ty Per Assembly
101	0353 0040N	SCREW - M3X4	
102	0951 4006Z	PHILIPS SCREW WITH FLAT WASHER - M4	
103	1105 0016	NYLON CLAMP - 4N	
104	0951 4008Z	PHILIPS SCREW WITH FLAT WASHER - M4X8	
105	0450 4008N	TAPPING SCREW - M4X8	
106	0720 0050G	RETAINING RING - M5	
107	0740 3206	BALL BEARING - 6X19X6	
108	0951 3006Z	PHILIPS SCREW WITH FLAT WASHER - M3	

27.Drum Unit 5

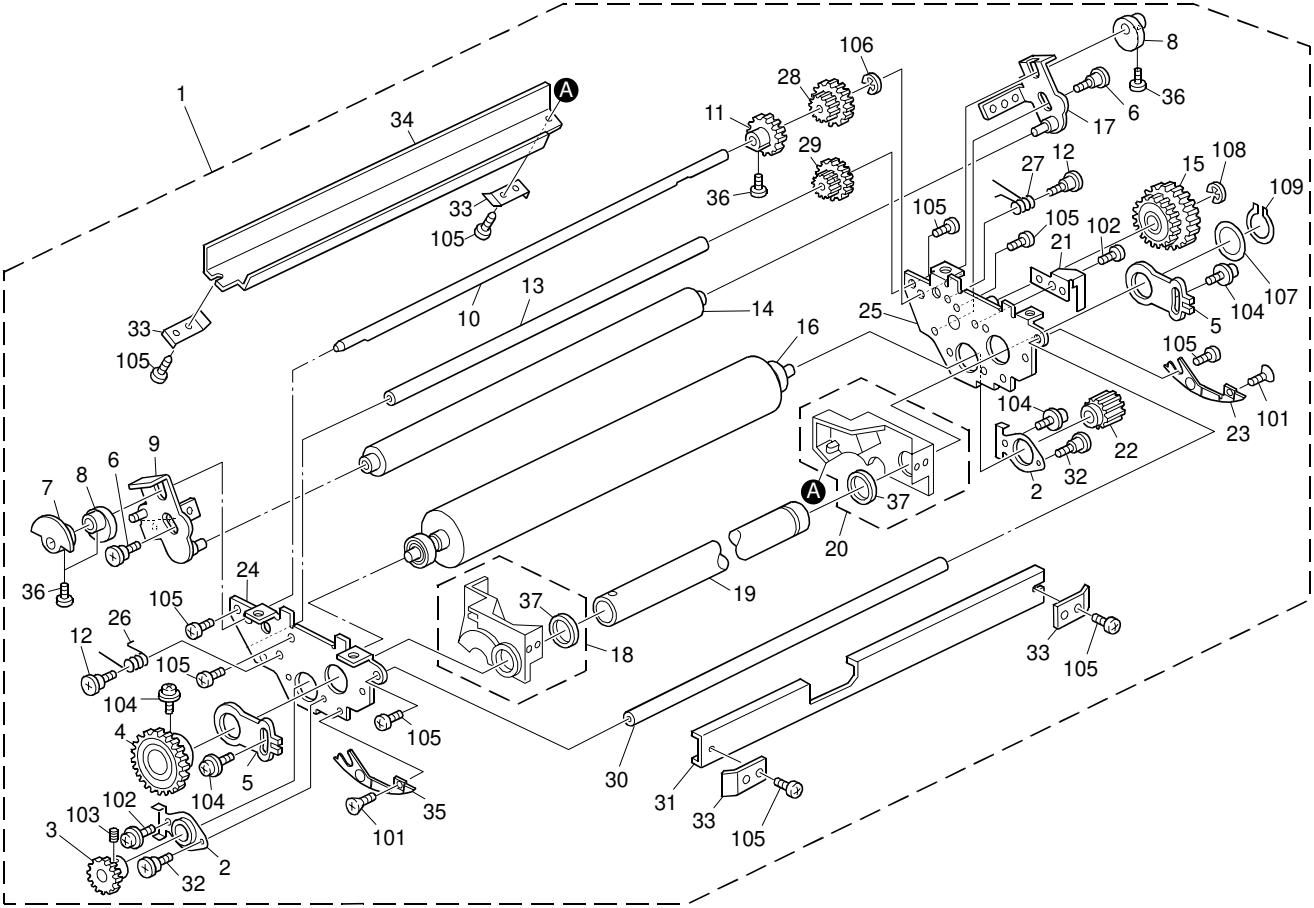

27.Drum Unit 5

Index No.	Part No.	Description	Q'ty Per Assembly
1	C262 2317	OIL SUPPLY ROLLER:OIL SUPPLY ROLLER:ASS'Y	1
2	C236 2468	BEARING HOLDER	2
3	C229 2478	GEAR - 19Z	1
4	C229 2459	GEAR - 37Z	1
5	C229 2473	ADJUSTING PLATE - DOCTOR ROLLER	2
6	C244 5125	STEPPED SCREW - M6	2
7	C262 2551	SHIELDING PLATE:OIL SUPPLY ROLLER	1
8	C236 2575	INK SUPPLY ROLLER ARM	2
9	C262 2575	SIDE PLATE:OIL SUPPLY ROLLER:INK: FRONT:ASS'Y	1
10	C265 2567	SHAFT:ARM:MOVE:OIL SUPPLY ROLLER	1
11	C236 2566	RETURN GEAR	1
12	C265 2315	SCREW:DRUM	2
13	C229 2479	SUPPORT STAY	1
14	C236 2540	OIL SUPPLY ROLLER ASS'Y	1
15	C236 2466	MIDDLE DRIVE GEAR	1
16	C229 2451	INK ROLLER	1
17	C262 2577	SIDE PLATE:OIL SUPPLY ROLLER:INK: REAR:ASS'Y	1
18	C262 2450	SEPARATION PLATE:INK:FRONT:ASS'Y	1
19	C229 2458	DOCTOR ROLLER	1
20	C262 2466	SEPARATION PLATE:INK:REAR:ASS'Y	1
21	C236 2465	GROUND PLATE - INK ROLLER	1
22	C265 2646	GEAR:INK:Z16	1
23	C262 2479	BLADE:REAR:DRUM:SAP	1
24	C265 2461	SIDE PLATE:FRONT:OIL SUPPLY ROLLER:2.5	1
25	C265 2462	SIDE PLATE:REAR:OIL SUPPLY ROLLER:ASS'Y	1
26	C236 2562	FRONT SPRING	1
27	C265 2563	SPRING:OIL SUPPLY ROLLER:REAR	1
28	C236 2564	WORM WHEEL GEAR	1
29	C236 2565	INK MIDDLE GEAR	1
30	C236 2464	SIDE PLATE STAY	1
31	C262 2478	BLADE:FRONT:DRUM:SAP	1
32	C265 2450	SCREW:DIA4*M3*0.9	2

Index No.	Part No.	Description	Q'ty Per Assembly
33	C262 2623	PLATE:BLADE:DRUM	4
34	C262 2472	BLADE:COLLECT:REAR	1
35	C262 2473	BLADE:COLLECT:FRONT	1
36	C262 2549	SCREW:LOCK:M2.5X5	4
37	C229 2544	INK ROLLER RING	2
101	0323 0060N	SCREW M3X6	
102	0353 0040N	SCREW - M3X4	
103	0574 0040E	HEXAGON HEADLESS SET SCREW - M4X4	
104	0951 3006Z	PHILIPS SCREW WITH FLAT WASHER - M3	
105	0354 0080N	SCREW:M4X8	
106	0720 0040G	RETAINING RING - M4	
107	0807 7114	WASHER - 16X24X0.3MM	
108	0720 0080G	C-RING - M8	
109	0725 0160E	RETAINING RING C - M16	

28.Scanner Unit 1

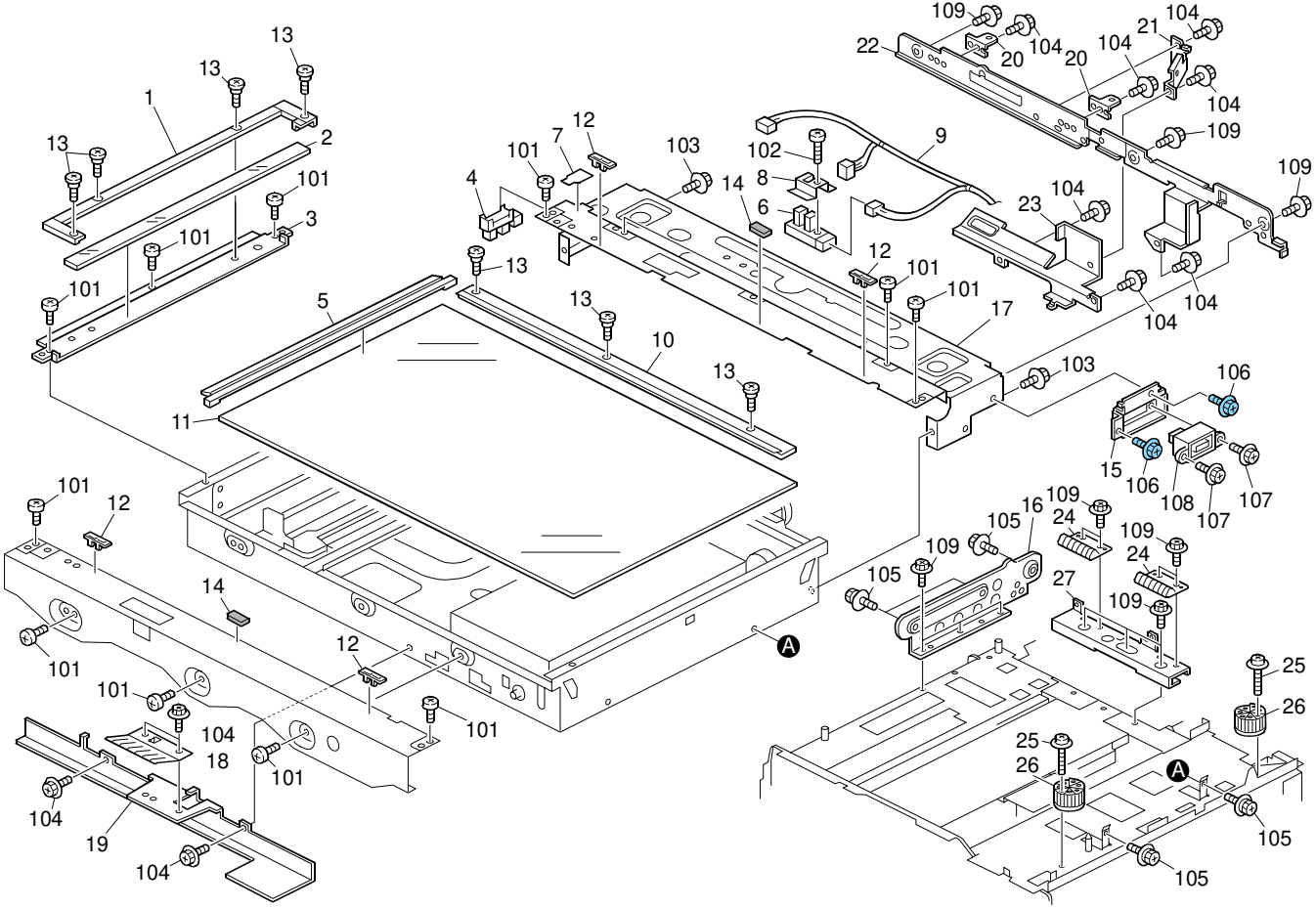

28.Scanner Unit 1

Index No.	Part No.	Description	Q'ty Per Assembly
1	D142 1801	SCALE:LEFT:A	1
2	D105 1795	EXPOSURE GLASS:DOCUMENT FEEDER	1
3	B238 1803	DOCUMENT FEEDER BRACKET	1
4	AW02 0204	PHOTOINTERRUPTOR:LGRC102	1
5	D142 1786	SCALE:LEFT:B:NA:ASS'Y	1
5	D142 1785	SCALE:LEFT:B:DOM/EU:ASS'Y	1
6	AW02 0146	PHOTOINTERRUPTOR:FLAT:PICH2MM:M4	1
7	G570 1225	SENSOR SHIELDING PLATE	1
8	D039 1770	GROUND PLATE:SENSOR:AKS	1
9	D039 5203	HARNESS:SCANNER:FRAME	1
10	D142 1750	SCALE:INNER BACK:PRINTING	1
11	A250 1752	EXPOSURE GLASS	1
12	D039 1751	HOLDER:EXPOSURE GLASS	4
13	B390 1759	SHAFT:SCALE	7
14	5442 1924	EXPOSURE GLASS CUSHION	2
15	D039 1792	BRACKET:CONNECTOR:DOCUMENT FEEDER	1
16	C280 1107	BRACKET:SCANNER UNIT:LEFT	1
17	D039 1769	FRAME:REAR	1
18	A267 1089	GROUNDING PLATE - UPPER REAR	1
19	C280 1800	COVER:OPERATION PANEL	1
20	C280 1811	BRACKET:COVER:REAR	2
21	C280 1819	BRACKET:HARNESS:SCANNER	1
22	C280 1815	PLATE:BASE:UPPER:WELDING	1
23	C280 1821	BRACKET:SCANNER:BASE	1
24	D039 1095	GROUND PLATE:SCANNER:STAY:UPPER REAR	2
25	C280 1828	SCREW:POLISHED ROUND:M3	2
26	C280 1827	ADJUSTING PIN:SCANNER UNIT:UPPER LOWER	2
27	C280 1108	PLATE:EARTH	1

Index No.	Part No.	Description	Q'ty Per Assembly
101	0353 0060N	BIND SCREW - M3X6	
102	0314 0120N	SCREW - M4X12	
103	0360 3006N	SCREW - M3X6	
104	0451 3006N	TAPPING SCREW - 3X6	
105	0804 6123	HEXAGONAL BOLT:W/WASHER:M3X8	
106	0454 3006Q	TAPPING SCREW - M3X6	
107	0451 3008N	TAPPING SCREW - M3X8	
108	1102 8501	CONNECTOR:54679-1609	
109	0451 4006N	TAPPING SCREW - 4X6	

29.Scanner Unit 2

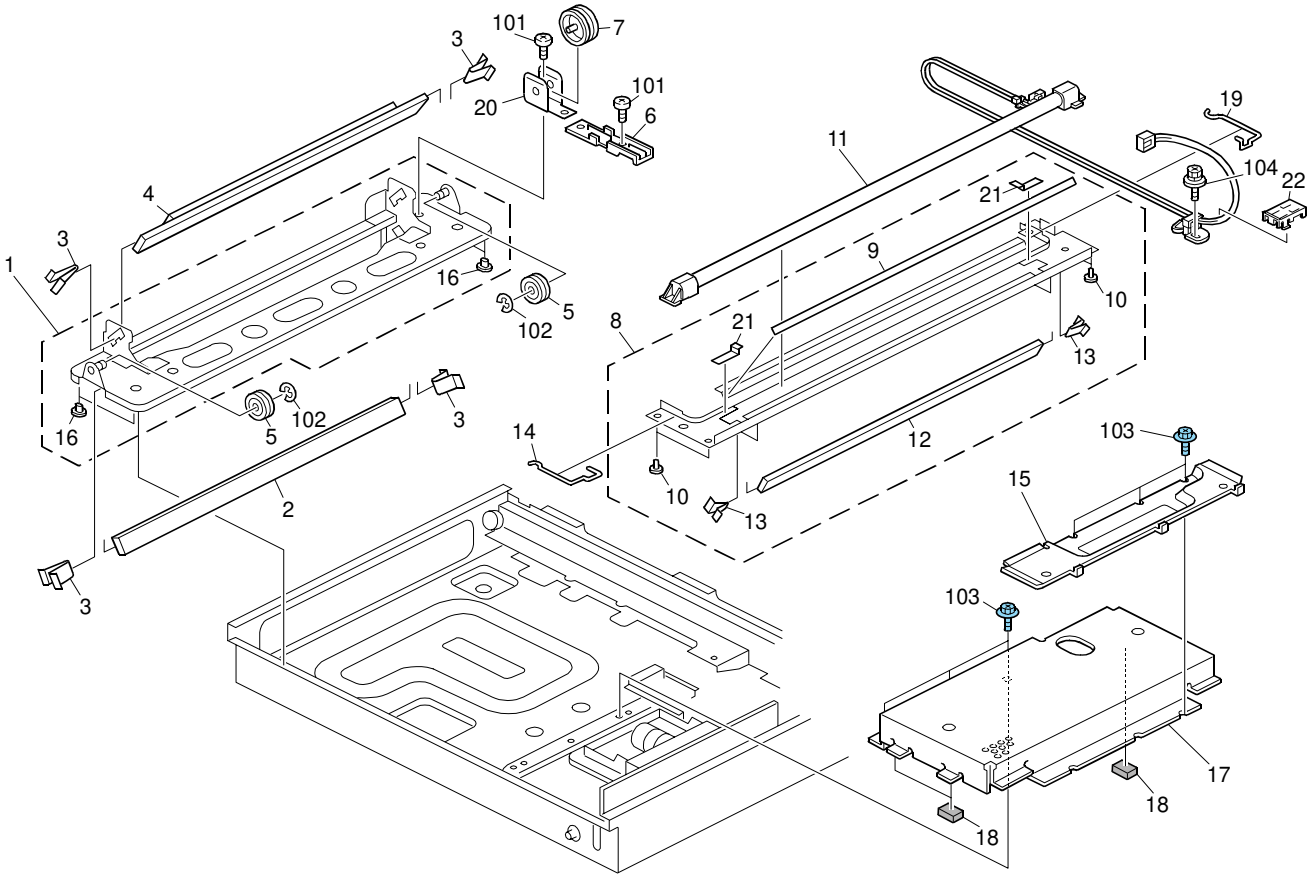

29.Scanner Unit 2

Index No.	Part No.	Description	Q'ty Per Assembly
1	D039 1742	CARRIAGE:NO.2:SUB-ASS'Y	1
2	D025 1728	MIRROR:NO.2:CONVAX:ASS'Y	1
3	G404 2810	SPRING PLATE - 2ND MIRROR	4
4	D025 1727	MIRROR:NO.2:CONCAVE:ASS'Y	1
5	B238 1807	PULLEY	2
6	D039 1747	GUIDE:HIGH VOLTAGE SUPPLY CORD	1
7	G570 2834	PULLEY - HIGH VOLTAGE SUPPLY CORD	1
8	D029 1715	CARRIAGE:NO.1:ASS'Y	1
9	A100 1714	REFLECTOR	1
10	G570 2730	SLIDER - SCANNER	4
11	D039 1733	XENON LAMP:DIA10:ASS'Y	1
12	AC03 0169	MIRROR:NO.1	1
13	M026 1815	CLAMP:MIRROR:NO.1	2
14	A193 1766	WIRE CLAMP	1
15	D039 1705	GROUND PLATE:HARNESS:SBU	1
16	A250 1791	2ND SCANNER SHOE	4
17	D039 1700	INNER COVER:SCANNER:PEEN	1
18	D105 1703	GASKET:9X5.5X17	3
19	A193 1769	CLAMP - REAR WIRE	1
20	G570 2833	PULLEY HOLDER	1
21	D029 1719	SHEET:CARRIAGE:NO.1	2
22	D039 1748	GUIDE:HIGH VOLTAGE SUPPLY CORD:RAIL	1

Index No.	Part No.	Description	Q'ty Per Assembly
101	0353 0050N	SCREW-M3X5	
102	0720 0040E	RETAINING RING - M4	
103	0454 3006Q	TAPPING SCREW - M3X6	
104	0804 6123	HEXAGONAL BOLT:W/WASHER:M3X8	

30.Scanner Unit 3

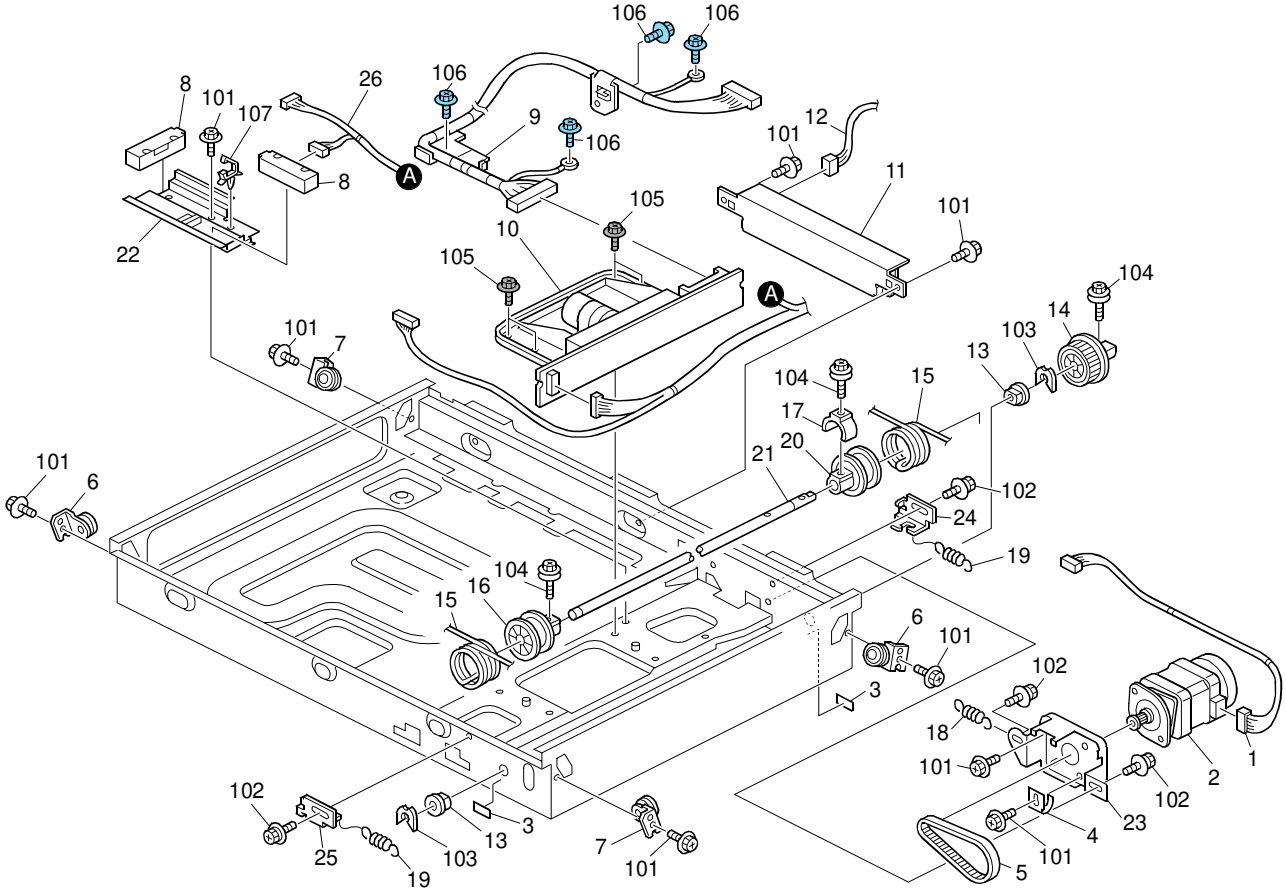

30.Scanner Unit 3

Index No.	Part No.	Description	Q'ty Per Assembly
1	D039 5201	HARNESS:SCANNER:STM	1
2	B238 1715	STEPPER MOTOR DC3.9V	1
3	B238 1793	BUSHING SPACER	2
4	B238 1762	GROUND PLATE - STEPPER MOTOR	1
5	B238 1792	TIMING BELT - 157ST1.5-4.0	1
6	D039 1718	PULLEY:IDLER:LEFT FRONT:PEEN	2
7	D039 1720	PULLEY:IDLER:LEFT REAR:PEEN	2
8	AW01 0134	ORIGINAL SENSOR - 48MM	2
9	D039 5205	INTERFACE CABLE:SCANNER:LVDS:PEEN	1
10	D039 1801	LENS:HOLDER:ASS'Y	1
11	D039 5401	STABILIZER	1
12	D039 5203	HARNESS:SCANNER:FRAME	1
13	AA08 2144	BUSHING - 8X12X7	2
14	G570 1133	TIMING PULLEY 73	1
15	D039 1715	DRIVE WERE	2
16	D029 1748	PULLEY:DRIVE WERE:REAR:ASS'Y	1
17	D029 1749	PULLEY:PROTECTION	1
18	AA06 0979	TENSION SPRING:TENSION:14720MN	1
19	AA06 0980	TENSION SPRING:TENSION:11300MN	2
20	D029 1745	PULLEY:DRIVE WERE:FRONT	1
21	D039 1717	SHAFT:SCANNER:DRIVE	1
22	D039 1764	BRACKET:ORIGINAL SENSOR:SUB SCANNING	1
23	D039 1724	BRACKET:STEPPER MOTOR:DRIVE	1
24	D039 1713	BRACKET:TENSION:REAR	1
25	D039 1712	BRACKET:TENSION:FRONT	1
26	D039 5206	HARNESS:SCANNER:BASE:H	1

Index No.	Part No.	Description	Q'ty Per Assembly
101	0360 3006N	SCREW - M3X6	
102	0804 6123	HEXAGONAL BOLT:W/WASHER:M3X8	
103	0805 0088	RETAINING RING - M6	
104	0802 5312	TAPPING SCREW:WASHER:3X10	
105	0360 3006P	SCREW - M3X6	
106	0454 3006Q	TAPPING SCREW - M3X6	
107	1105 0511	HARNESS CLAMP - LWS-0306ZC	

31.Plotter Unit 1

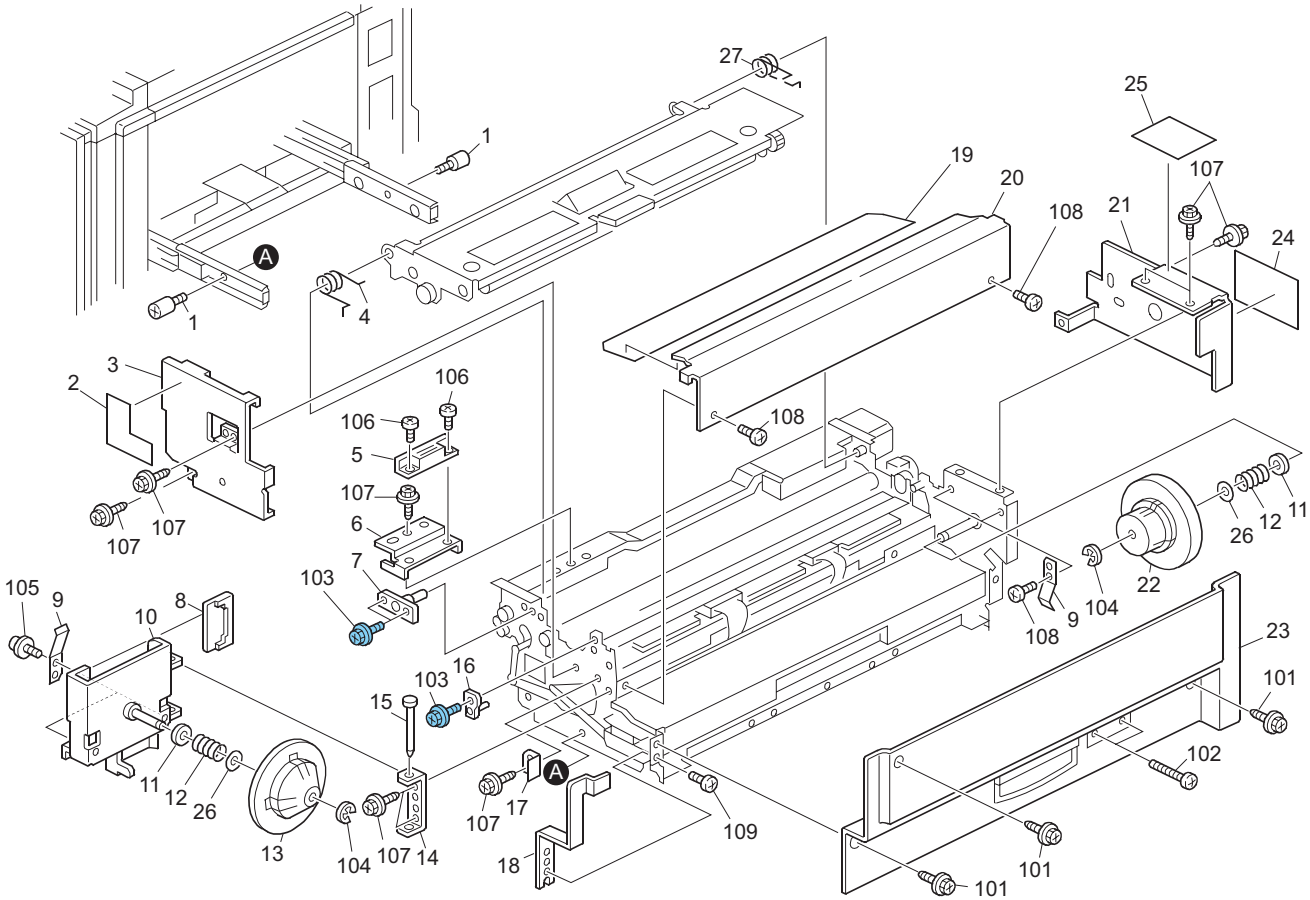

31.Plotter Unit 1

Index No.	Part No.	Description	Q'ty Per Assembly
1	C269 1978	DECAL:MASTER:MISFEED REMOVAL	1
2	C257 1977	FRONT COVER	1
3	C257 2175	FRONT TORSION SPRING	1
4	C244 2198	MAGNET CATCH:ASS'Y	1
5	C257 2178	LOCK BRACKET	1
6	C257 1980	UPPER BASE FRONT SHAFT	1
7	C269 2032	GRIP:SUPPLY:PLOTTER:D3:PRINTING	1
8	C269 2201	SPRING PLATE:TENSION:FLANGE	2
9	C244 2193	FRONT BRACKET	1
10	C209 6163	SPACER - 10X18X1	2
11	C236 2190	MASTER PRESSURE SPRING	2
12	C257 2196	FLANGE MASTER FRONT DIA46	1
13	C244 2188	STAY:FLANGE:FRONT	1
14	C244 2187	SHAFT:FLANGE:MASTER:RIGHT	1
15	C257 1970	UPPER BASE STOPPER PIN	1
16	C229 2189	MASTER FLANGE SPRING	1
17	C229 1979	STAY - PLOTTER COVER	1
18	C259 2136	GUIDE:THERMAL HEAD:SHEET	1
19	C257 2136	LOWER MASTER PLATE GUIDE	1
20	C257 1983	REAR COVER	1
21	C257 2184	FLANGE MASTER REAR DIA46	1
22	C280 2132	COVER:PLOTTER	1
23	C262 1356	DECAL:CAUTION CHART:HARNESS:SERVICE	1
24	B065 4180	SPACER - 16MM	2
25	C257 2176	REAR TORSION SPRING	1
26	C259 1351	CAUTION DECAL:MASTER SET	1
27	C244 1994	PLOTTER SLIDE RAIL SCREW	2

Index No.	Part No.	Description	Q'ty Per Assembly
101	0451 4006N	TAPPING SCREW - 4X6	
102	0354 0140N	SCREW M4X14	
103	0454 3006Q	TAPPING SCREW - M3X6	
104	0720 0040E	RETAINING RING - M4	
105	0951 3004N	SCREW:POLISHED ROUND:M3X4	
106	0353 0060N	BIND SCREW - M3X6	
107	0451 3006N	TAPPING SCREW - 3X6	
108	0353 0040N	SCREW - M3X4	
109	0354 0060N	SCREW-M4X6	

32.Plotter Unit 2

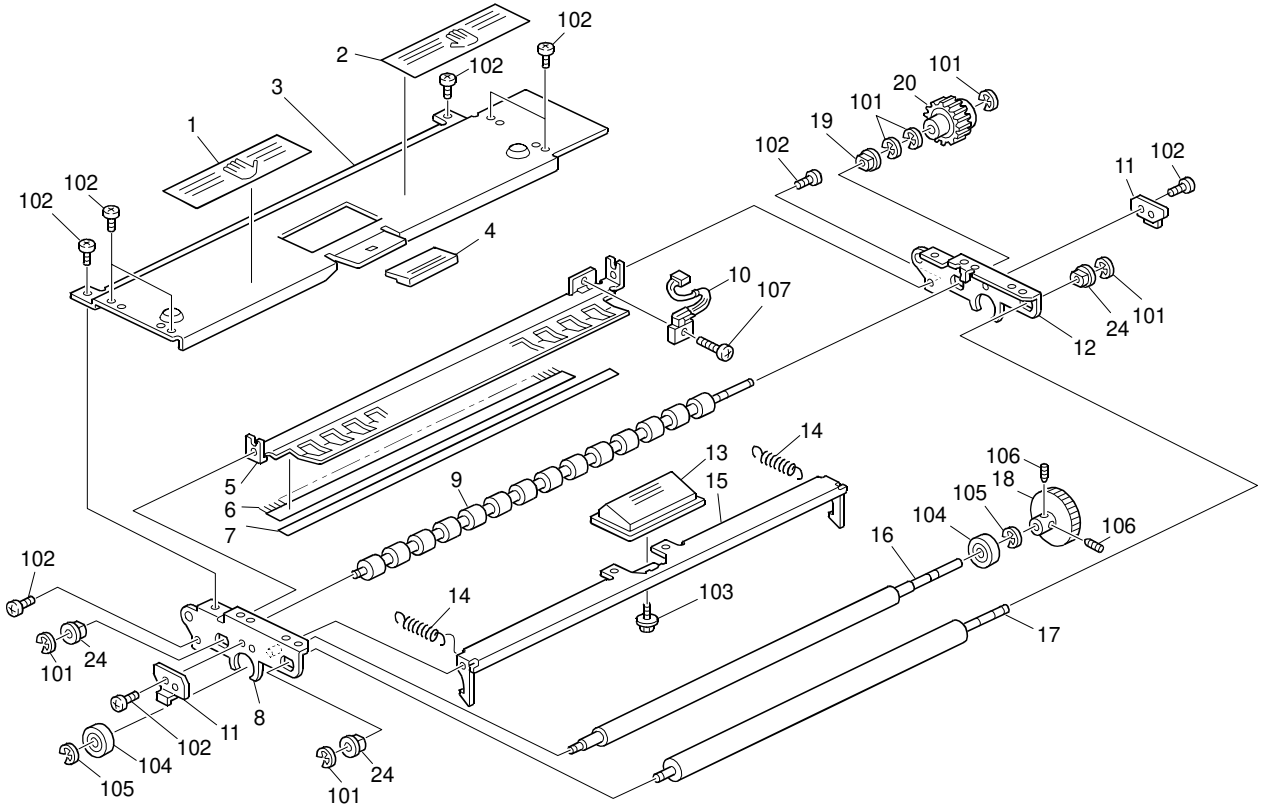

32.Plotter Unit 2

Index No.	Part No.	Description	Q'ty Per Assembly
1	C279 2048	DECAL:OPEN AND CLOSE:PLOTTER:LEFT	1
2	C279 2049	DECAL:OPEN AND CLOSE:PLOTTER:RIGHT	1
3	C257 2160	UPPER BASE COVER	1
4	C269 2031	GRIP:SUPPLY:PLOTTER:D2:PRINTING	1
5	C257 2171	UPOPER GUIDE PLATE	1
6	C257 2205	GUIDE PLATE DISCHARGE BRUSH	1
7	C259 2042	GUIDE:ROLLER:TENSION	1
8	C262 2149	SIDE PLATE:FRONT:UPPER BASE:PEEN	1
9	C257 2002	UPPER TENSION ROLLER	1
10	C280 5854	OPTICS SENSOR:MASTER:DUCT	1
11	C257 2156	PLATENROLLER PLATE BRACKET	2
12	C280 2154	SIDE PLATE:REAR:UPPER BASE:PEEN	1
13	C269 2030	GRIP:OPEN AND CLOSE:PLOTTER:D1:PRINTING	1
14	C257 2172	OPEN AND CLOSE TENSION SPRING	2
15	C257 2162	OPEN AND CLOSE LEVER	1
16	C262 2081	PLATENROLLER:MM18-12:45	1
17	C269 2140	ROLLER:PULL OUT:MASTER	1
18	C236 2082	PLATEN GEAR	1
19	H012 1181	BUSHING- 6MM	1
20	C257 2018	TORQUE LIMITER	1

Index No.	Part No.	Description	Q'ty Per Assembly
101	0720 0040E	RETAINING RING - M4	
102	0353 0040N	SCREW - M3X4	
103	0450 3008N	TAPPING SCREW - M3X8	
104	0740 3908	BALL BEARING - 8X19X6	
105	0720 0060E	RETAINING RING - M6	
106	0574 0040E	HEXAGON HEADLESS SET SCREW - M4X4	
107	0352 0080N	SCREW:M2X8	

33.Plotter Unit 3

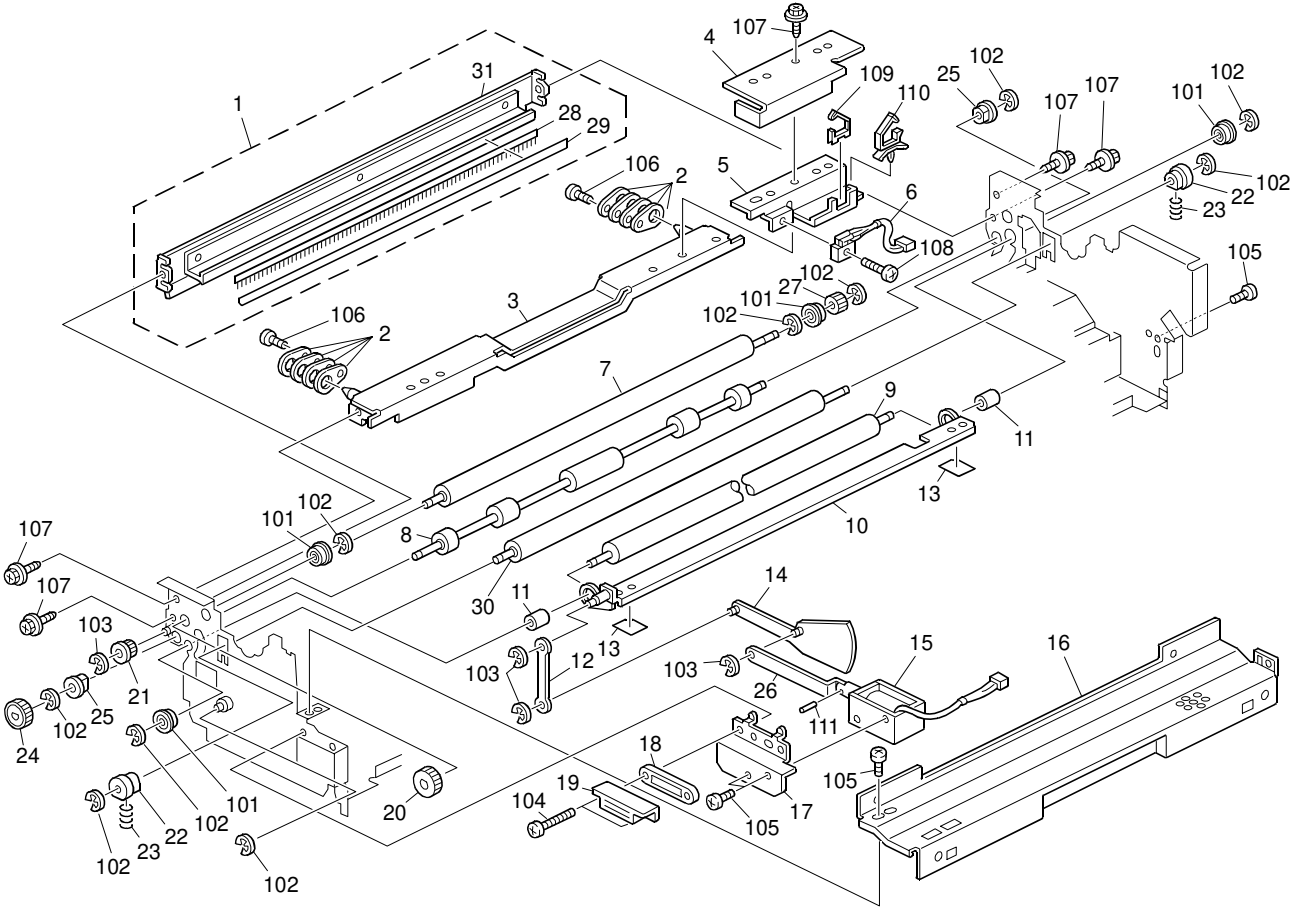

33.Plotter Unit 3

Index No.	Part No.	Description	Q'ty Per Assembly
1	C257 2034	REVERSE ROLLER GUIDE PLATE	1
2	C257 1987	POSITIONING SPACER	8
3	C257 1985	STAY	1
4	C257 2239	SENSOR COVER	1
5	C269 2240	BRACKET:SENSOR:LEADING EDGE	1
6	C280 5855	OPTICS SENSOR:MASTER:SET SENSOR	1
7	C257 2008	REVERSE ROLLER	1
8	C257 2009	TENSION ROLLER	1
9	C269 2009	REVERSE ROLLER:PLOTTER:LOWER	1
10	C244 2042	GUIDE PLATE:DUCT:OPEN AND CLOSE:ASS'Y	1
11	C236 2010	LOWER SPACER - REVERSE ROLLER	2
12	C244 2057	LINK:UPPER:OPEN AND CLOSE:GUIDE PLATE	1
13	C244 2047	RIGHT REVERSE ROLLER GUIDE	2
14	C244 2052	ARM:OPEN AND CLOSE:GUIDE PLATE:ASS'Y	1
15	C257 5870	DRUM LOCK SOLENOID	1
16	C244 2139	COVER:MASTER:LOWER:ASS'Y	1
17	C233 2215	SOLENOID COVER	1
18	C230 2199	MAGNET CATCH SPACER	1
19	C244 2198	MAGNET CATCH:ASS'Y	1
20	C257 2010	GEAR 36Z	1
21	C257 2012	IDLER GEAR	1
22	C229 2006	BUSHING	2
23	C236 2004	COMPRESSION SPRING	2
24	C257 2011	GEAR 20Z	1
25	H012 1181	BUSHING- 6MM	2
26	C229 2058	LOWER GUIDE LINK	1
27	C236 2011	PULLEY - UPPER REVERSE ROLLER	1
28	C259 2039	DISCHARGE BRUSH:REVERSE ROLLER:UPPER	1
29	C259 2038	GUIDE:REVERSE ROLLER:UPPER	1
30	C265 2003	ROLLER:TENSION:PLOTTER:LOWER	1
31	C257 2035	REVERSE ROLLER GUIDE PLATE	1

Index No.	Part No.	Description	Q'ty Per Assembly
101	0741 3706	BALL BEARING - 6X10X3	
102	0720 0040E	RETAINING RING - M4	
103	0720 0030E	RETAINING RING - M3	
104	0453 3014N	BINDING SELF TAPPING SCREW 3X14	
105	0353 0040N	SCREW - M3X4	
106	0353 0060N	BIND SCREW - M3X6	
107	0451 3006N	TAPPING SCREW - 3X6	
108	0352 0080N	SCREW:M2X8	
109	1105 0551	CLAMP:LES-0505	
110	1105 0534	CLAMP	
111	0623 0140E	SPRING PIN - 3X14MM	

34.Plotter Unit 4

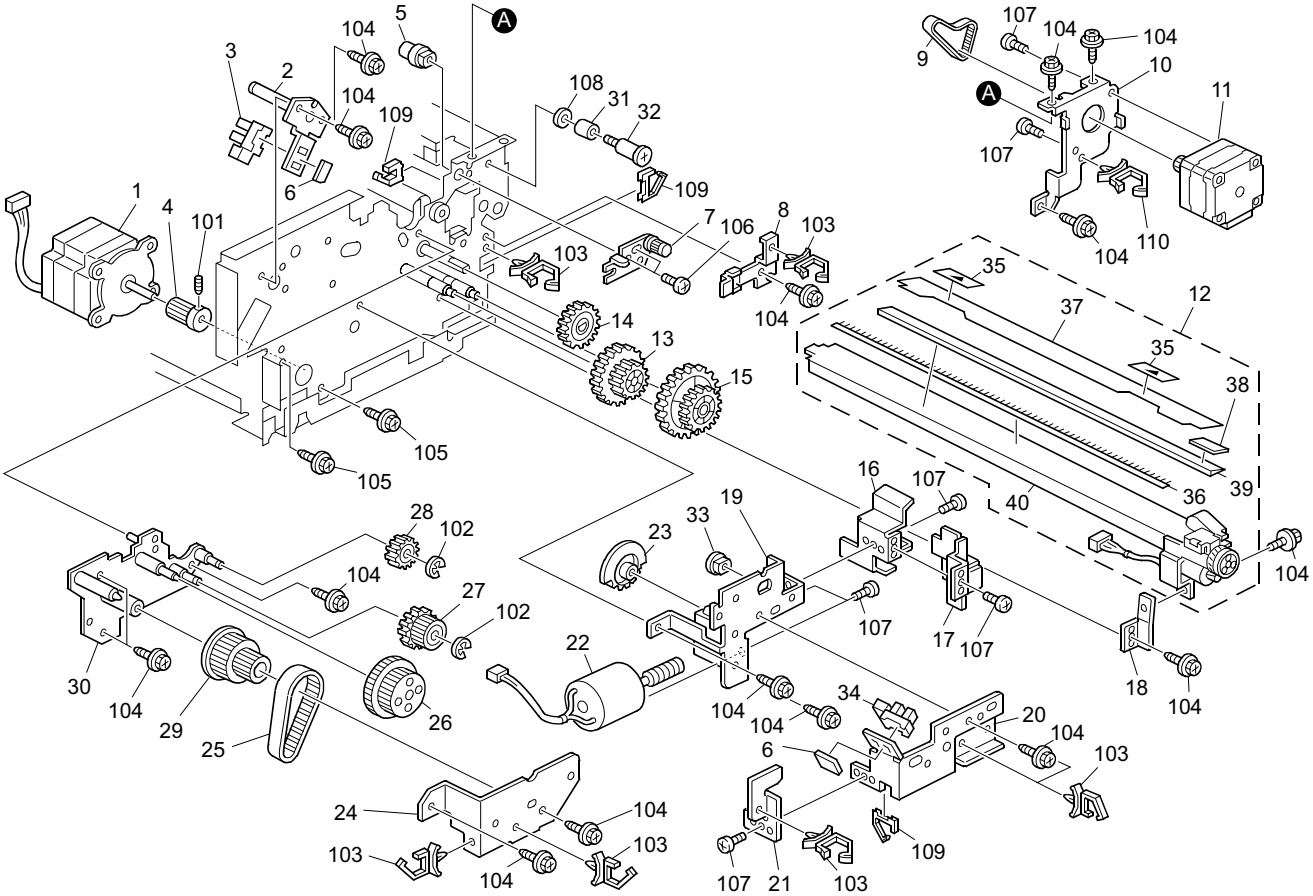

34.Plotter Unit 4

Index No.	Part No.	Description	Q'ty Per Assembly
1	C265 5802	STEPPER MOTOR:MM50*40	1
2	C257 2188	MASTER FLANGE BRACKET - REAR	1
3	AW02 0203	PHOTOINTERRUPTOR:GP1A173LCS2F	1
4	C219 4071	GEAR - 17Z	1
5	C257 1963	REAR SHAFT	1
6	H522 1100	SENSOR GUIDE	2
7	C257 2031	REVERSE ROLLER BRACKET	1
8	C257 2254	HARNESS COVER	1
9	B700 4327	TIMING BELT:B40S2M90	1
10	C257 2226	STEPPER MOTOR BRACKET	1
11	C257 5808	STEPPER MOTOR MM42*33	1
12	C257 2105	CUTTER UNIT	1
13	C229 2104	IDLE GEAR	1
14	C229 2102	DRIVE GEAR - 26Z	1
15	C229 2103	WORM GEAR	1
16	C257 2232	HARNESS GUIDE	1
17	C257 2235	REAR HARNESS COVER	1
18	C257 2112	CUTTER UNIT BRACKET	1
19	C257 2109	PRESSURE RELEASE BRACKET	1
20	C257 2234	PRESSURE RELEASE SENSOR BRACKET	1
21	C257 2236	PRESSURE RELEASE SENSOR COVER	1
22	C259 5803	DC MOTOR:5.0W:MM34	1
23	C229 2107	ACTUATOR GEAR	1
24	C262 2028	SUPPORTING PLATE:DRIVE:PLOTTER	1
25	C236 2222	TIMING BELT - B106MXL9.5	1
26	C236 2022	IDLER GEAR - PLATEN	1
27	C236 2024	IDLER GEAR - TENSION	1
28	C257 2027	GEAR 22Z	1
29	C236 2021	SLOW DOWN PULLEY	1
30	C262 1964	BRACKET:DRIVE SUB-UNIT:PLOTTER:PEEN	1
31	A376 1257	SPACER - M4X6X6	1
32	C244 2016	SCREW:GUIDE	1
33	H012 1181	BUSHING- 6MM	1
34	AW02 0141	PHOTOINTERRUPTOR	1

Index No.	Part No.	Description	Q'ty Per Assembly
35	C272 2098	DECAL:MASTER:POSITIONING DISPLAY	2
36	C257 2216	TENSION DISCHARGE BRUSH - LEFT	1
37	C259 2225	LEFT TENSION GUIDE	1
38	C257 2218	SENSOR GUIDE PLATE	1
39	C257 2213	TENSION ROLLER GUIDE ASS'Y	3
40	C257 2211	CUTTER UNIT PLOTTER	1
101	0574 0040E	HEXAGON HEADLESS SET SCREW - M4X4	
102	0720 0040E	RETAINING RING - M4	
103	1105 0511	HARNESS CLAMP - LWS-0306ZC	
104	0451 3006N	TAPPING SCREW - 3X6	
105	0451 4008N	TAPPING SCREW:4X8	
106	0353 0060N	BIND SCREW - M3X6	
107	0353 0040N	SCREW - M3X4	
108	0701 0030N	WASHER DIA3	
109	1105 0551	CLAMP:LES-0505	
110	1105 0534	CLAMP	

35.Plotter Unit 5

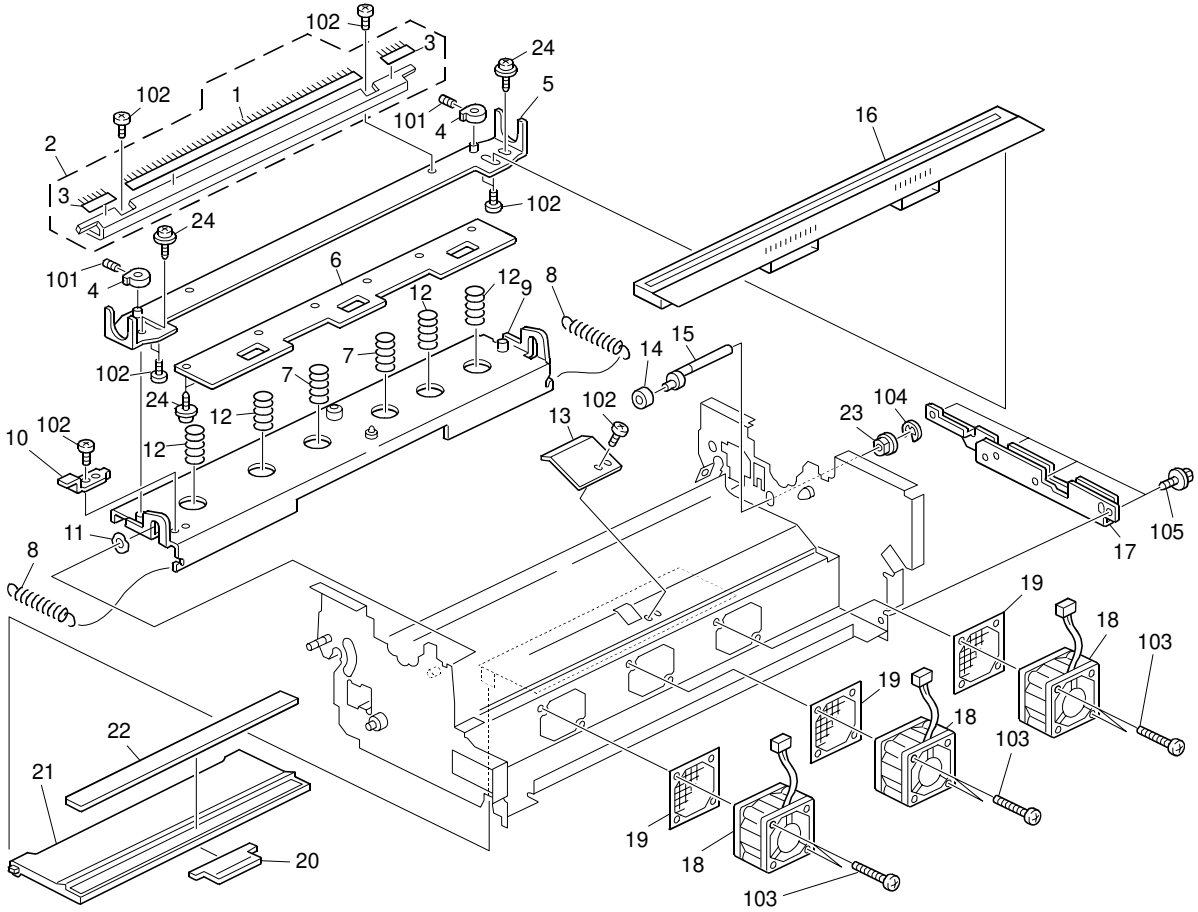

35.Plotter Unit 5

Index No.	Part No.	Description	Q'ty Per Assembly
1	C257 2221	DISCHARGE BRUSH 207MM TENSION	1
2	C262 2118	GUIDE PLATE:THERMAL HEAD:ASS'Y	1
3	C257 2222	DISCHARGE BRUSH 20MM TENSION	2
4	C257 2128	ADJUSTING PIN COLLAR	2
5	C262 2125	BRACKET:POSITIONING:THERMAL HEAD	1
6	C262 2120	SPACER:THERMAL HEAD	1
7	C259 2094	THERMAL HEAD SPRING	2
8	C262 2095	TENSION SPRING:THERMAL HEAD	2
9	C257 2087	THERMAL HEAD STAY	1
10	C244 2098	BRACKET:STOPPER:BASE	1
11	C218 4038	BUSHING WASHER - M8	1
12	C236 2093	COMPRESSION SPRING - 6.9N	4
13	C269 2100	BRACKET:OPTICS SENSOR:DUCT	1
14	C229 2113	RELEASE ROLLER	1
15	C229 2112	RELEASE CAM	1
16	C262 5180	THERMAL HEAD:A3:600	1
17	C239 1993	REAR PLOTTER SLIDE RAIL SPACER	1
18	C257 5826	AIR KNIFE DC MOTOR: 24V 5.3W	3
19	C265 2066	COVER:FAN	3
20	C239 2066	DUCT COVER GRIP	1
21	C239 2064	LOWER DUCT COVER	1
22	C244 2067	DUCT COVER MAGNET	1
23	H012 1181	BUSHING- 6MM	1
24	C257 2123	THERMAL HEAD SCREW	8

Index No.	Part No.	Description	Q'ty Per Assembly
101	0573 0030E	HEXAGON HEADLESS SET SCREW - M3X3	
102	0353 0040N	SCREW - M3X4	
103	0353 0350N	SCREW M3X35	
104	0720 0040E	RETAINING RING - M4	
105	0451 3006N	TAPPING SCREW - 3X6	

36.Plotter Unit 6

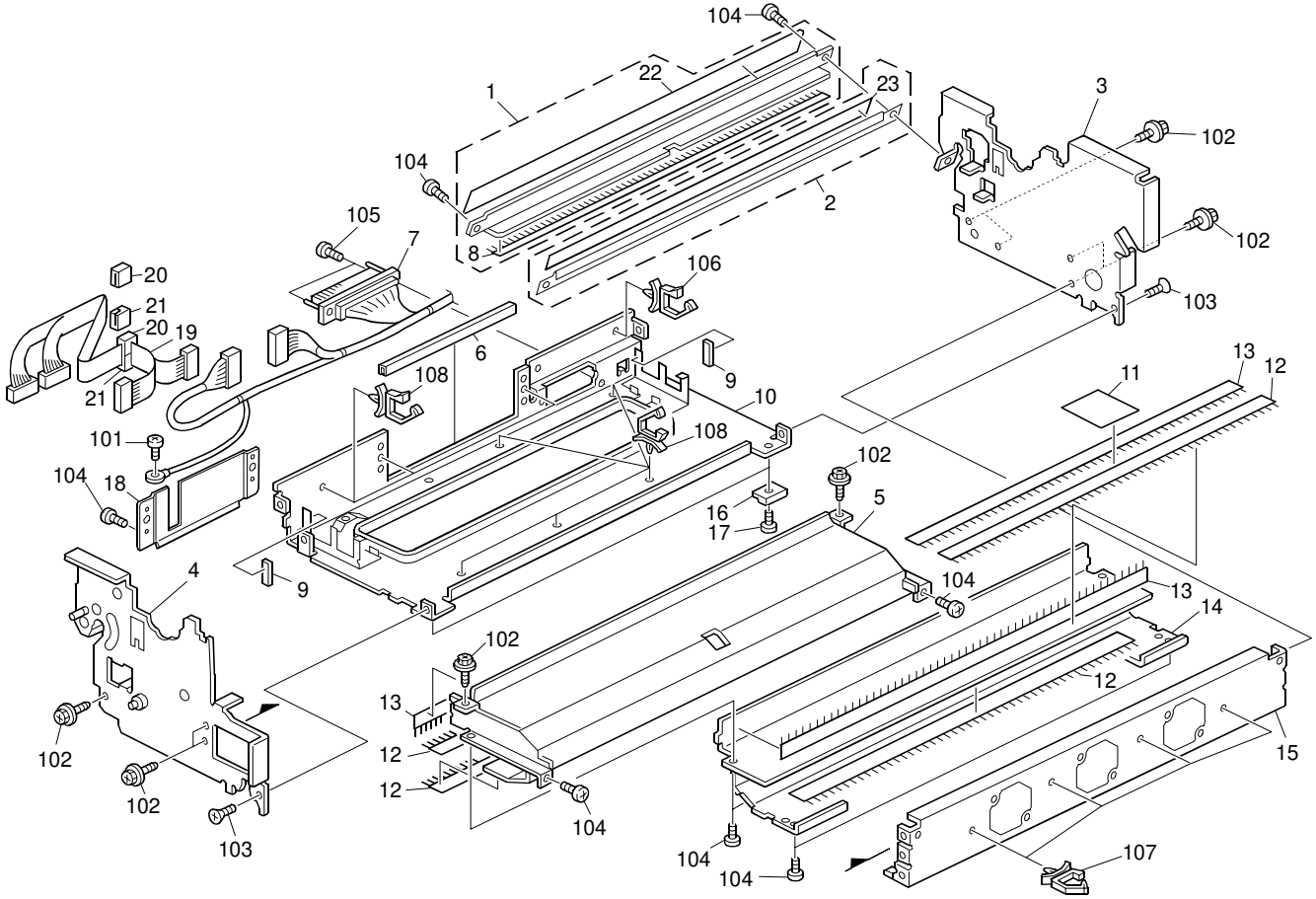

36.Plotter Unit 6

Index No.	Part No.	Description	Q'ty Per Assembly
1	C257 2030	REVERSE ROLLER GUIDE PLATE - LOWER	1
2	C257 2029	REVERSE ROLLER GUIDE PLATE - LOW/MID	1
3	C257 1961	PLOTTER SIDE PLATE - REAR	1
4	C257 1951	PLOTTER SIDE PLATE - FRONT	1
5	C257 2073	DUCT CASE	1
6	C262 2248	GUARD:CE-012:102MM	1
7	C280 5248	HARNESS:PLOTTER:ASS'Y	1
8	C259 2036	DISCHARGE BRUSH:EXIT:REVERSE ROLLER	1
9	C239 1182	GUARD:CE-012S:23.5MM	2
10	C262 2243	BASE:PLOTTER:ASS'Y	1
11	C257 2485	DRUM SENSOR SHEET	1
12	C257 2078	DISCHARGE BRUSH - LOWER	4
13	C257 2079	DISCHARGE BRUSH	3
14	C244 2068	CASE:DUCT:LOWER:ASS'Y	1
15	C236 2066	RIGHT DUCT GUIDE PLATE	1
16	C257 2241	BASE SPACER	2
17	5875 2088	SHOULDER SCREW - M4	2
18	C262 2245	COVER:FLAT CABLE:PLOTTER	1
19	C262 5217	FLAT CABLE:CONNECTING:PLOTTER:ASS'Y	1
20	C262 2246	PLATE:FLAT CABLE:UPPER	2
21	C262 2247	PLATE:FLAT CABLE:LOWER	1
22	C259 2037	GUIDE:REVERSE ROLLER:LOWER	1
23	C257 2041	LOWER MIDDLE REVERSE ROLLER GUIDE	1

Index No.	Part No.	Description	Q'ty Per Assembly
101	0354 0060N	SCREW-M4X6	
102	0451 3006N	TAPPING SCREW - 3X6	
103	0323 0060N	SCREW M3X6	
104	0353 0040N	SCREW - M3X4	
105	0353 0080N	SCREW:M3X8	
106	1105 0488	HARNESS CLAMP	
107	1105 0487	HARNESS CLAMP	
108	1105 0516	CLAMP	

37.Master Eject 1

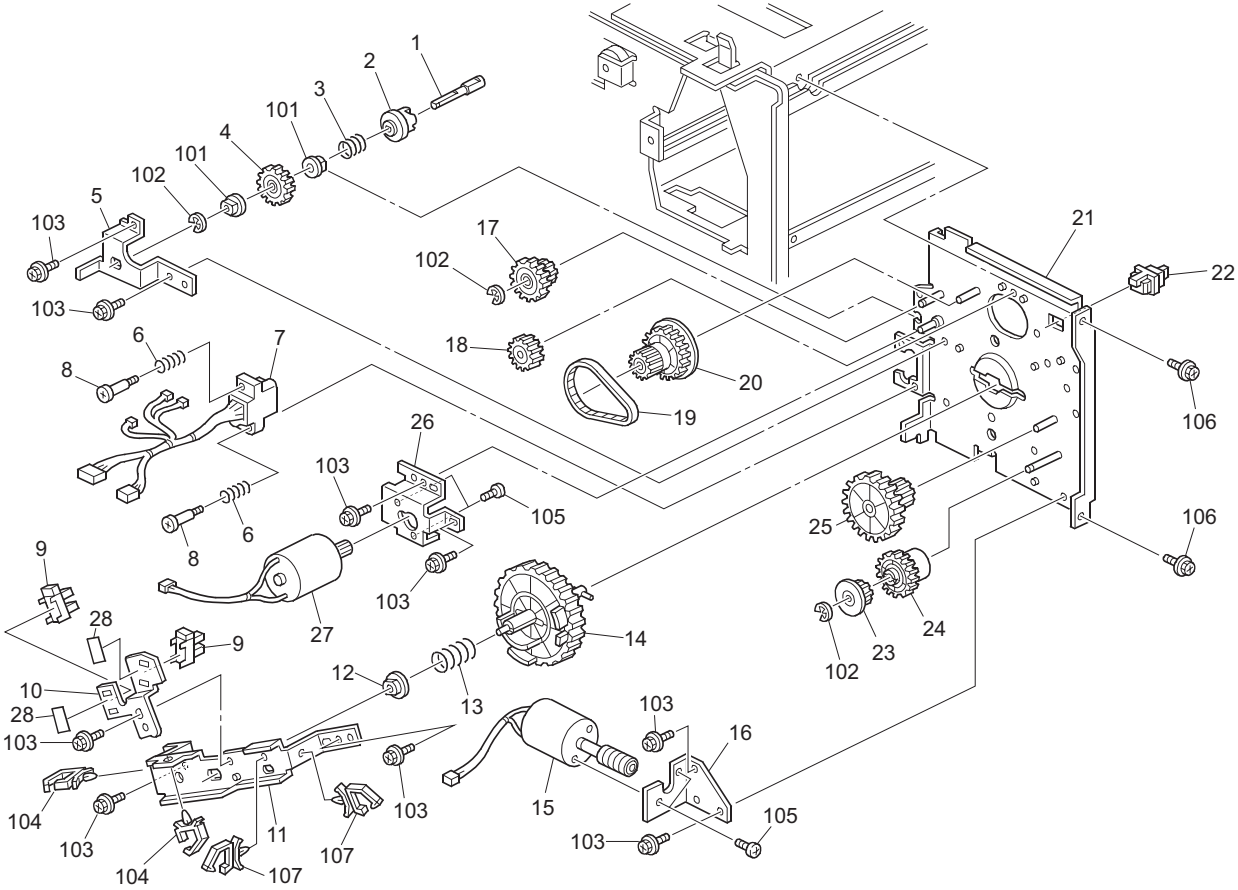

37.Master Eject 1

Index No.	Part No.	Description	Q'ty Per Assembly
1	C229 3548	JOINT SHAFT	1
2	C229 3547	JOINT CAM	1
3	C265 3541	COMPRESSION SPRING:JOINT:TRANSPORT	1
4	C229 2102	DRIVE GEAR - 26Z	1
5	C244 3549	BRACKET:JOINT:TRANSPORT	1
6	C265 3585	COMPRESSION SPRING:3N	2
7	C280 5228	HARNESS:CONNECTING:MASTER EJECTION UNIT:ASS'Y	1
8	AA14 3569	SCREW	2
9	AW02 0203	PHOTOINTERRUPTOR:GP1A173LCS2F	2
10	C229 3582	POSITIONING SENSOR BRACKET	1
11	C269 3564	BRACKET:SHAFT:TAKE OFF	1
12	C269 3566	BUSHING:MM8:PRESSURE:DRIVE	1
13	C265 3565	COMPRESSION SPRING:JOINT:PRESSURE:7N	1
14	C269 3559	JOINT:PRESSURE SUB-UNIT:DRIVE:ASS'Y	1
15	C259 5803	DC MOTOR:5.0W:MM34	1
16	C244 3563	BRACKET:DC MOTOR:PRESSURE	1
17	C229 3545	2ND GEAR - 8Z/32Z	1
18	C229 3542	3RD GEAR - 22Z	1
19	C229 3551	TIMING BELT - S2M160	1
20	C229 3544	GEAR PULLEY - 18Z/60Z	1
21	C265 3566	SIDE PLATE:REAR:MASTER EJECTION:PEEN	1
22	AW50 0012	PUSH SWITCH	1
23	C229 3557	GEAR - 17Z	1
24	C238 3556	TORQUE LIMITER - 2500G	1
25	C229 3558	2ND GEAR - 18Z/49Z	1
26	C244 3543	BRACKET:DC MOTOR:TRANSPORT	1
27	C259 5811	DC MOTOR:5.0W:MM34:PULLEY	1
28	H522 1100	SENSOR GUIDE	2

Index No.	Part No.	Description	Q'ty Per Assembly
101	0805 3385	BUSHING - 6MM	
102	0720 0040E	RETAINING RING - M4	
103	0451 3006N	TAPPING SCREW - 3X6	
104	1105 0487	HARNESS CLAMP	
105	0353 0040N	SCREW - M3X4	
106	0451 4006N	TAPPING SCREW - 4X6	
107	1105 0511	HARNESS CLAMP - LWS-0306ZC	

38.Master Eject 2

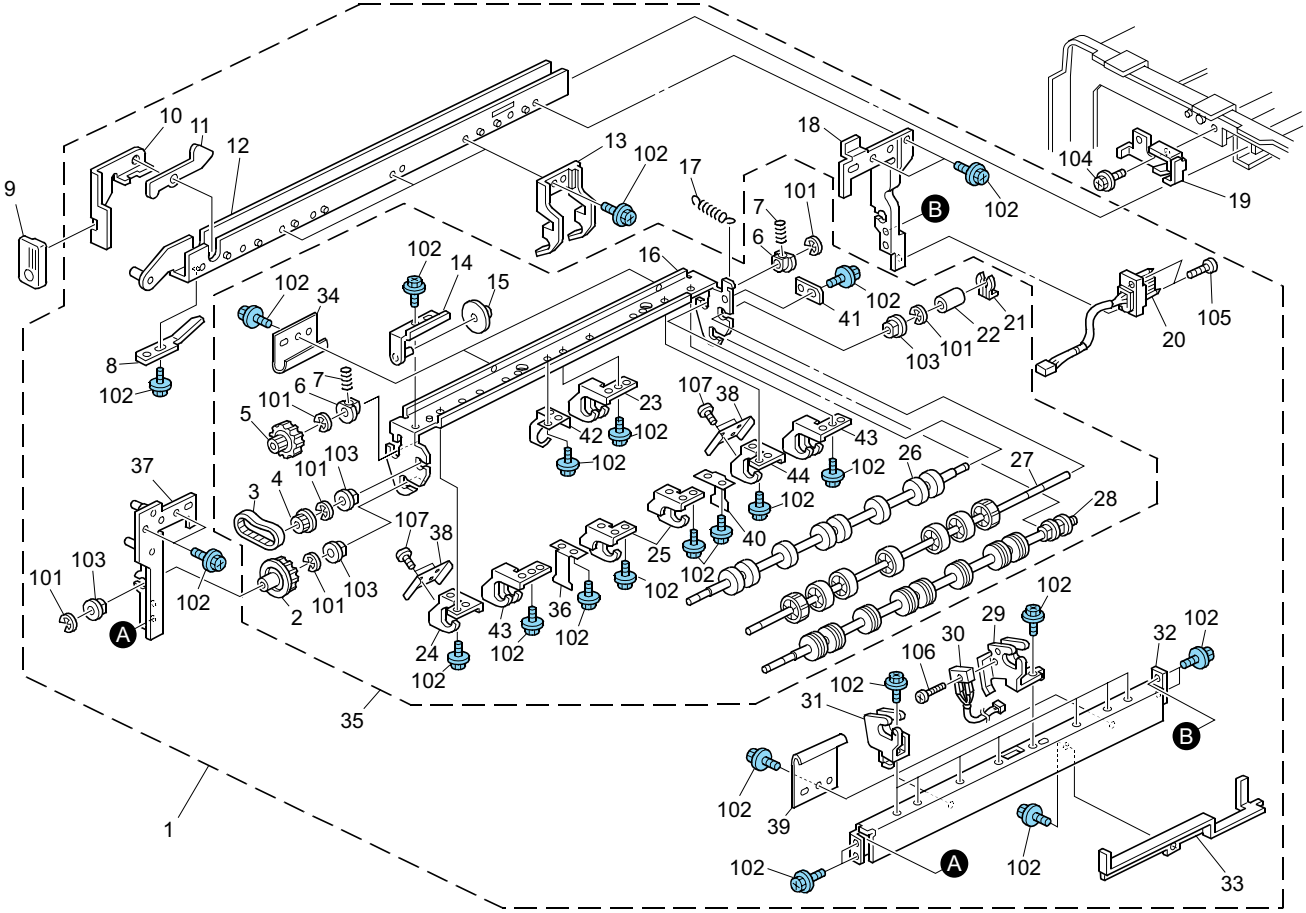

38.Master Eject 2

Index No.	Part No.	Description	Q'ty Per Assembly
1	C280 3406	TRANSPORT UNIT:MASTER EJECTION:ASS'Y	1
2	C229 3537	TRANSPORT LOWER GEAR - 26Z	1
3	C229 3532	TIMING BELT - S2M76	1
4	C229 3530	DRIVEN PULLEY - 18Z	1
5	C229 3531	GEAR/PULLEY - 26Z/16T	1
6	C229 3486	BUSHING - MASTER EJECT ROLLER	2
7	C259 3459	PRESSURE SPRING:2.8N	2
8	C229 3476	SPRING PLATE	1
9	C244 3471	GRIP:LOCK:KNOB:PRINTING	1
10	C229 3478	ROLLER UNIT ARM	1
11	C244 3474	LOCK:SLIDE RAIL	1
12	C259 3485	SLIDE RAIL:UPPER:PEEN	1
13	C244 3609	GUIDE:MASTER:TRAILING EDGE	3
14	C244 3533	BRACKET:BELT TENSIONER:PEEN	1
15	C229 3536	BELT TENSION COLLAR	1
16	C244 3461	STAY:ROLLER:ARM	1
17	C259 3482	TENSION SPRING:POSITION:ROLLER:2.4N	1
18	C244 3462	SIDE PLATE:REAR:SLIDE	1
19	C244 3589	STOPPER:SLIDE RAIL:MACHINE OR COPIER	1
20	C280 5245	HARNESS:MASTER EJECTION::ASS'Y	1
21	5447 2681	SNAP RING	1
22	C229 3481	COLLAR - 6MM	1
23	C265 3455	GUIDE:UPPER REAR	1
24	C265 3616	GUIDE:UPPER FRONT	1
25	C244 3454	GUIDE:UPPER MIDDLE	2
26	C265 3453	TRANSPORT ROLLER:UPPER:RUBBER	1
27	C265 3454	ROLLER:EXFLOLIATION UNIT:A3	1
28	C265 3451	TRANSPORT ROLLER:LOWER:ASS'Y	1
29	C244 3467	BRACKET:PHOTO REFIECTION SENSOR	1
30	C280 5851	OPTICS SENSOR:MASTER	1
31	C244 3465	GUIDE:LOWER:TRANSPORT ROLLER	7
32	C265 3464	STAY:LOWER:SIDE PLATE:MOVEABLE	1
33	C244 3488	COVER:HARNESS:SENSOR	1
34	C259 3625	GUIDE PLATE:UPPER:SHAFT:MASTER EJECTION	2

Index No.	Part No.	Description	Q'ty Per Assembly
35	C265 3449	TRANSPORT ROLLER:MASTER EJECTION:ASS'Y	1
36	C244 3622	GUIDE:EXFLOLIATION UNIT:FRONT UPPER	1
37	C244 3487	SIDE PLATE:FRONT:SLIDE:PEEN	1
38	C265 3623	GUIDE:MASTER EJECTION	2
39	C259 3626	GUIDE PLATE:LOWER:SHAFT:MASTER EJECTION	2
40	C244 3621	GUIDE:EXFLOLIATION UNIT:REAR UPPER	1
41	C244 3456	STOPPER:UPPER:TRANSPORT ROLLER	1
42	C265 3458	GUIDE:UPPER:SENSOR	1
43	C265 3475	GUIDE:UPPER REAR:LEFT	2
44	C265 3476	GUIDE:UPPER REAR:RIGHT	1
101	0720 0040E	RETAINING RING - M4	
102	0454 3006Q	TAPPING SCREW - M3X6	
103	0805 3385	BUSHING - 6MM	
104	0451 4006N	TAPPING SCREW - 4X6	
105	0353 0080N	SCREW:M3X8	
106	0352 0080N	SCREW:M2X8	
107	0353 0040N	SCREW - M3X4	

39.Master Eject 3

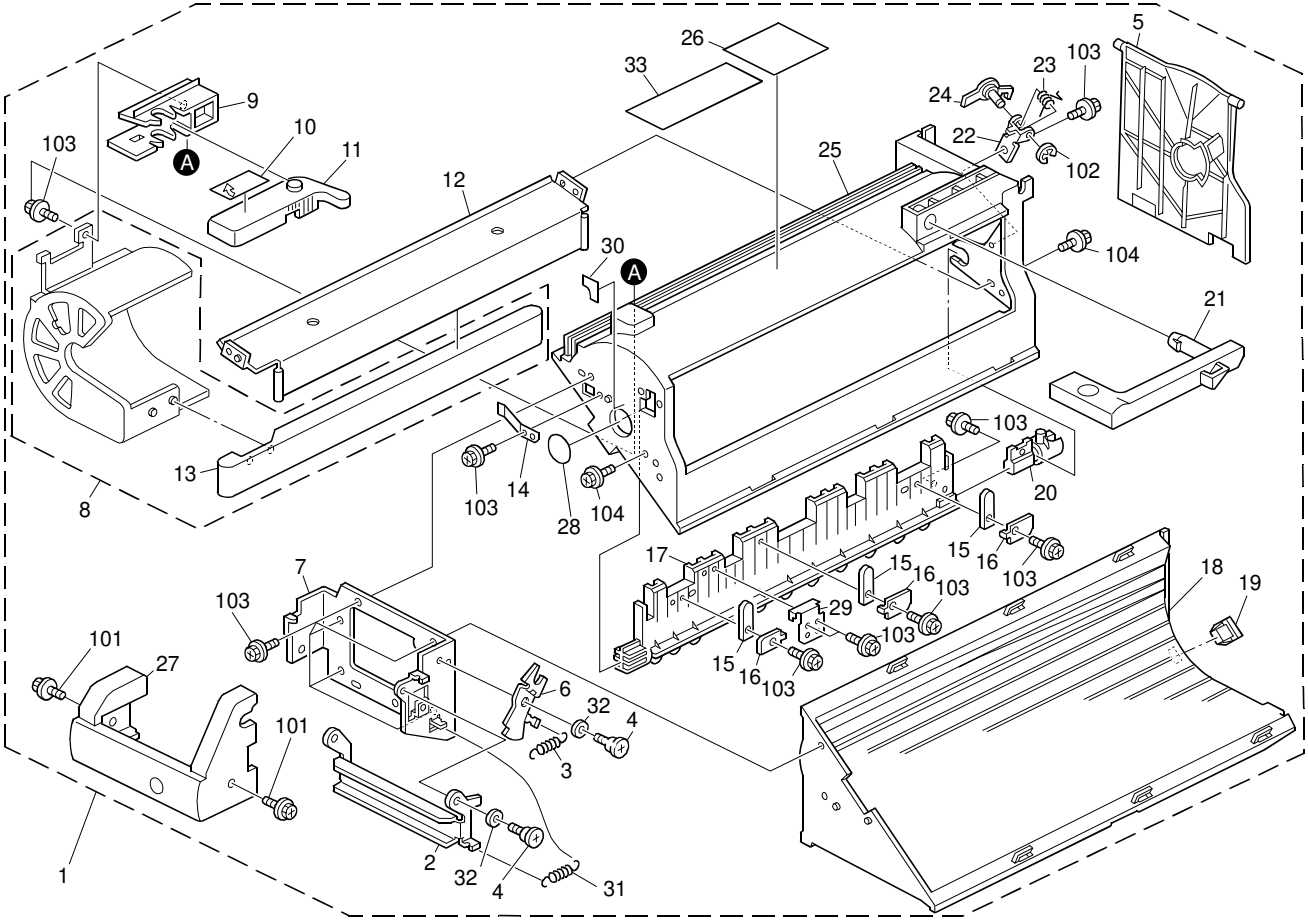

39.Master Eject 3

Index No.	Part No.	Description	Q'ty Per Assembly
1	C262 3408	CASE:MASTER EJECTION:ASS'Y	1
2	C244 3524	EJECT BOX LOCK LEVER	1
3	C244 3525	TENSION SPRING:9N:GRIP:MASTER EJECTION	1
4	C244 3522	STEPPED SCREW	2
5	C244 3510	DOOR:EXHAUST:CASE:ASS'Y	1
6	C244 3523	EJECT BOX LOCK ARM	1
7	C244 3526	BRACKET:GRIP:PULL OUT:FRONT	1
8	C244 3497	EJECT BOX GUIDE ASS'Y	1
9	C236 3501	EJECT BOX SLIDER	1
10	C229 3529	DECAL - DELIVERY TABLE SLIDER	1
11	C229 3502	SLIDE LOCK LEVER	1
12	C244 3518	DRUM STAY:SHEET:CASE:ADHESION	1
13	C244 3499	SHEET:EXHAUST:GUIDE PLATE:CASE	1
14	C229 3514	GROUNDING PLATE	1
15	C229 3495	MASTER STRIPPER PAWL	2
16	C244 3496	BRACKET:BLADE:PRESSURE PLATE	2
17	C244 3493	MASTER PRESS ARM	1
18	C244 3517	CASE:LOWER LEFT	1
19	A049 3371	MAGNET	1
20	C229 3494	MASTER PRESS ARM SHAFT	1
21	C229 3513	UPPER CASE GRIP	1
22	C244 3509	BRACKET:LOCK:PRESSURE PLATE	1
23	C265 3508	TORSION SPRING:LOCK:PRESSURE PLATE:2.45N	1
24	C229 3505	UPPER CASE RELEASE LEVER	1
25	C262 3494	CASE:UPPER RIGHT	1
26	C239 3528	DECAL - MASTER EJECT BOX	1
27	C244 3521	GRIP:PULL OUT:FIX	1
28	C269 1366	DECAL:POSITIONING DISPLAY:PRESSURE PLATE	1
29	C259 3495	PRESSURE PLATE BRACKET	1
30	C269 1367	DECAL:POSITIONING DISPLAY:CASE:MASTER EJECTION	1
31	C236 3525	RELEASE SPRING	1
32	H041 1583	WASHER - M5.4*0.1	2

Index No.	Part No.	Description	Q'ty Per Assembly
33	C265 1325	DECAL:OPERATION INSTRUCTIONS:MASTER EJECTION	1
101	0451 4008N	TAPPING SCREW:4X8	
102	0720 0040E	RETAINING RING - M4	
103	0450 3008N	TAPPING SCREW - M3X8	
104	0451 3006N	TAPPING SCREW - 3X6	

40. Paper Delivery Table

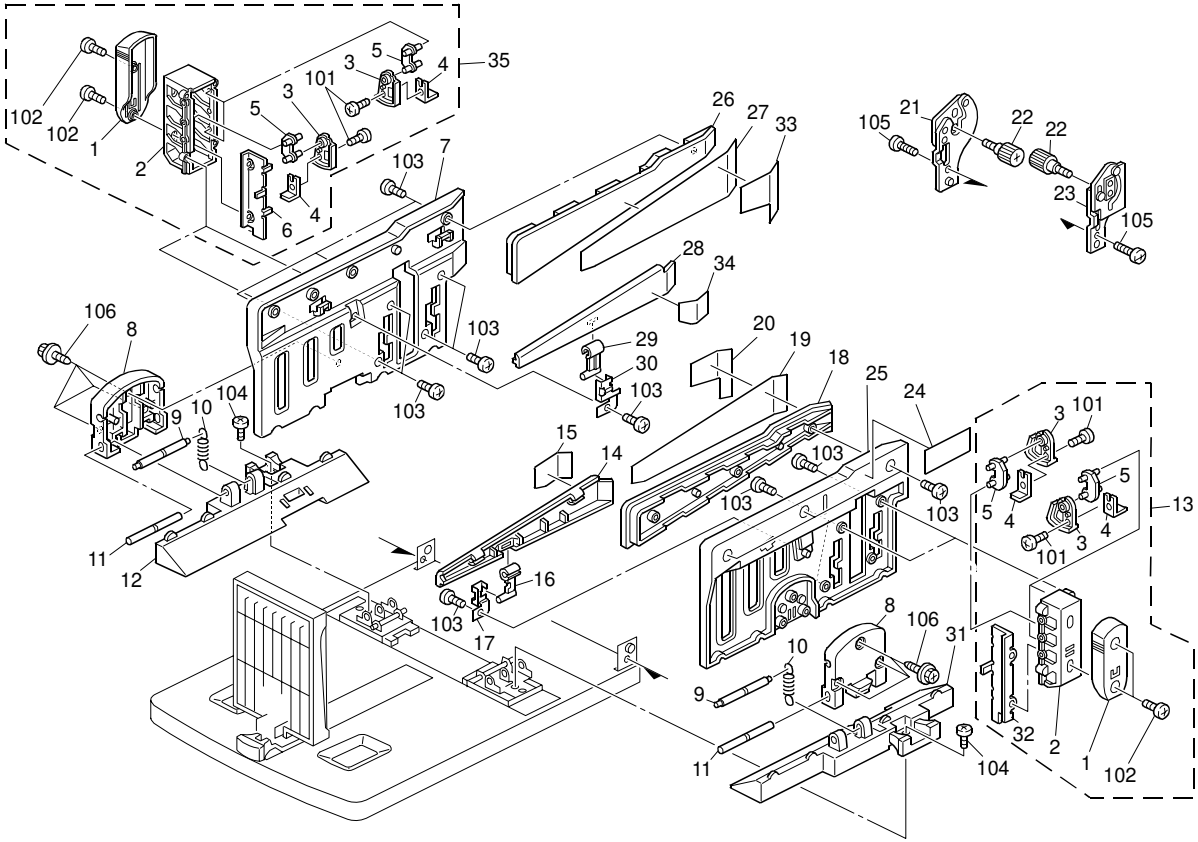

40.Paper Delivery Table

Index No.	Part No.	Description	Q'ty Per Assembly
1	C279 4387	GRIP:CASE:EXIT	2
2	C279 4380	CASE:PLATE:SWIVEL:EXIT	2
3	C279 4381	PLATE:SWIVEL:EXIT	4
4	C279 4382	BALANCER:LEVER:SWIVEL	4
5	C279 4383	LINK:SWIVEL:EXIT	4
6	C279 4385	GRIP:END FENCE	1
7	C279 4370	SIDE FENCE:REAR:PAPER EXIT SUB-UNIT	1
8	C279 4367	CASE:SIDE FENCE	2
9	C628 4368	UPPER - SIDE FENCE PIN	2
10	C628 4413	DELIVERY TABLE SPRING	2
11	C628 4414	PIN - LOWER SIDE FENCE	2
12	C279 4375	SIDE FENCE:REAR LOWER:PRINTING	1
13	C279 4257	PLATE:EXIT:FRONT:ASS'Y	1
14	C279 4362	GUIDE PLATE:EXIT:FRONT UPPER	1
15	C250 4392	SPARE SIDE FENCE - FRONT	1
16	C279 4363	LINK:GUIDE:FRONT	1
17	C279 4364	SPRING PLATE:LINK:FRONT	1
18	C279 4361	SIDE FENCE:FRONT UPPER	1
19	C250 4390	FRONT UPPER GUIDE	1
20	C628 4391	SIDE FENCE GUIDE - FRONT	1
21	C628 4450	REAR TABLE HINGE	1
22	C628 4448	KNOB SCREW:FIX:EXIT	2
23	C628 4440	FRONT TABLE HINGE	1
24	C279 4198	DECAL:GRIP:CASE	1
25	C279 4360	SIDE FENCE:FRONT:PAPER EXIT SUB-UNIT	1
26	C279 4371	SIDE FENCE:REAR UPPER	1
27	C250 4393	REAR UPPER GUIDE	1
28	C279 4372	GUIDE PLATE:EXIT:REAR UPPER	1
29	C279 4373	LINK:GUIDE:REAR	1
30	C279 4374	SPRING PLATE:LINK:REAR	1
31	C279 4365	SIDE FENCE:FRONT LOWER:PRINTING	1
32	C272 4384	SEPARATION PLATE:CASE:EXIT:FRONT	1
33	C628 4394	SIDE FENCE GUIDE - REAR	1
34	C250 4395	SPARE SIDE FENCE - REAR	1

Index No.	Part No.	Description	Q'ty Per Assembly
35	C279 4260	PLATE:EXIT:REAR:ASS'Y	1
101	0353 0040N	SCREW - M3X4	
102	0353 0080N	SCREW:M3X8	
103	0452 3008N	TAPPING SCREW - M3X8	
104	0354 0100N	SCREW - M4X10	
105	0453 4006N	BINDING SELF TAPPING SCREW:4X6	
106	0450 3010N	SCREW:M2X8	

41.Electrical Section 1

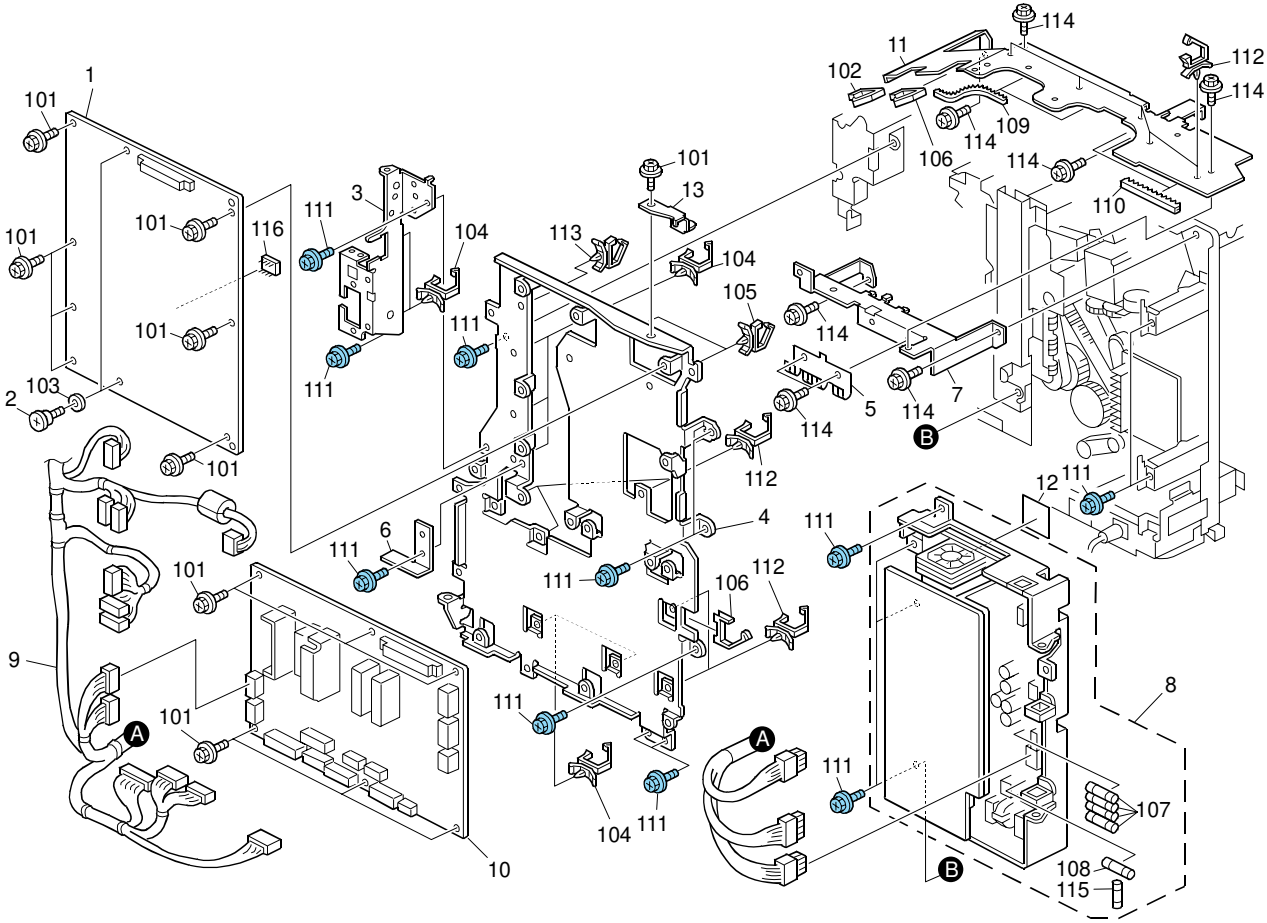

41.Electrical Section 1

Index No.	Part No.	Description	Q'ty Per Assembly
1	C280 5102	PCB:MPU:EMERALD-D2:FROM:ASS'Y	1
3	C269 5618	HINGE:PCB:UPPER	1
4	C280 5616	BRACKET:PCB:ASS'Y	1
5	C236 5673	HDD GROUND PLATE	2
6	C262 5608	COVER:PCB:BRACKET	1
7	C280 5679	BASE:HDD	1
8	C259 5301	DC POWER SUPPLY:MAIN:ASS'Y	1
9	C280 5284	HARNESS:DC DRIVE:ASS'Y	1
10	C280 5115	PRINTED CIRCUIT BOARD:I/O CONTROL: SUB-ASS'Y	1
11	C280 5680	BRACKET:HARNESS:MAIN	1
12	C262 1359	DECAL:CAUTION CHART:GEAR:SERVICE:EXP	1
13	C280 1822	BRACKET:SCANNER:EARTH	1

Index No.	Part No.	Description	Q'ty Per Assembly
101	0451 3006N	TAPPING SCREW - 3X6	
102	1105 0725	CLAMPS:WES-1117	
103	0701 0030N	WASHER DIA3	
104	1105 0490	HARNESS CLAMP - IWS-2218	
105	1105 0487	HARNESS CLAMP	
106	1105 0726	CLAMPS:WES-2217	
107	1107 1295	FUSE:GLASS CARTRIDGE:FSL 250V 6.3A(EM)	
108	1107 1294	FUSE:GLASS CARTRIDGE:FSL 250V 2A(EM)	
109	1106 0923	BUSHING:JKR-100	
110	1106 0922	BUSHING:JKR-60	
111	0454 3006Q	TAPPING SCREW - M3X6	
112	1105 0489	HARNESS CLAMP - LWS 1316	
113	1105 0516	CLAMP	
114	0451 4006N	TAPPING SCREW - 4X6	
115	1107 1297	FUSE:GLASS CARTRIDGE:FSL 250V 10A(EM)	
116	1407 7520	RAM:FM25V02-PG(REV.AA)	

42. Electrical Section 2

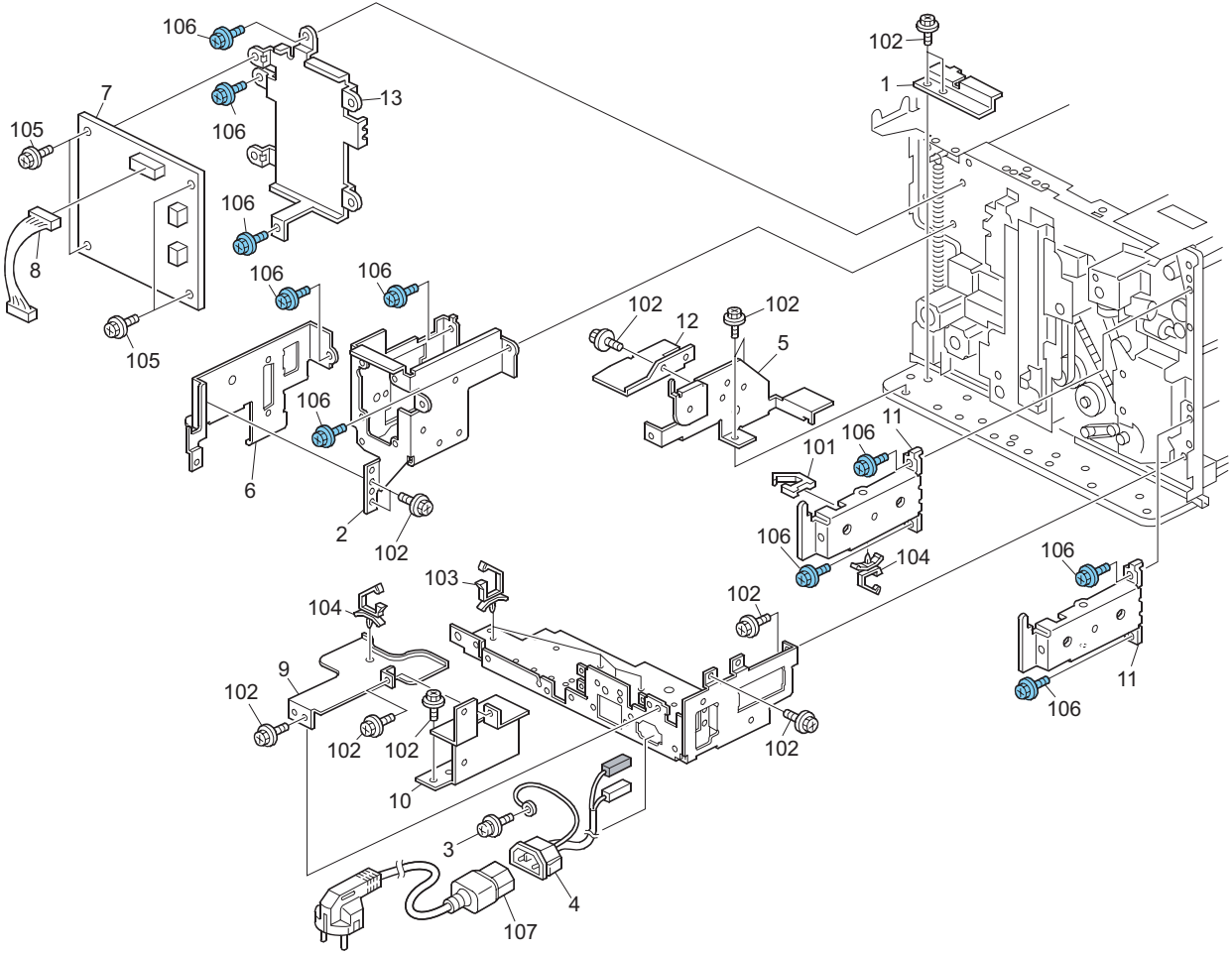

42.Electrical Section 2

Index No.	Part No.	Description	Q'ty Per Assembly
1	C262 1077	BRACKET:GUIDE:GRIP	3
2	C280 5624	BRACKET:KEY COUNTER:ADF	1
3	AA14 3592	SCREW- M4X6	1
4	C280 5841	INLET:ASS'Y	1
5	C280 5621	HINGE:PCB:LOWER	1
6	C280 5625	BRACKET:INTERFACE	1
7	C611 5512	DOUBLE FEED SENSOR BOARD	1
8	C280 5247	HARNESS:DOUBLE FEED SENSOR:CONNECTING:ASS'Y	1
9	C280 5615	SHADING PLATE:POWER SUPPLY CORD	1
10	C280 5617	SHADING PLATE:OUTLET	1
11	C244 5615	GUIDE PLATE:POWER SOURCE:MAIN	2
12	C262 5620	COVER:HINGE:PCB:LOWER	1
13	C611 5680	DOUBLE FEED SENSOR BRACKET	1

Index No.	Part No.	Description	Q'ty Per Assembly
101	1105 0551	CLAMP:LES-0505	
102	0451 4006N	TAPPING SCREW - 4X6	
103	1105 0490	HARNESS CLAMP - IWS-2218	
104	1105 0489	HARNESS CLAMP - LWS 1316	
105	0451 3006N	TAPPING SCREW - 3X6	
106	0454 4006Q	TAPPING SCREW:4X6	
107	1150 0377	POWER SUPPLY CODE:250V:10A:EU	

43. Controller Board

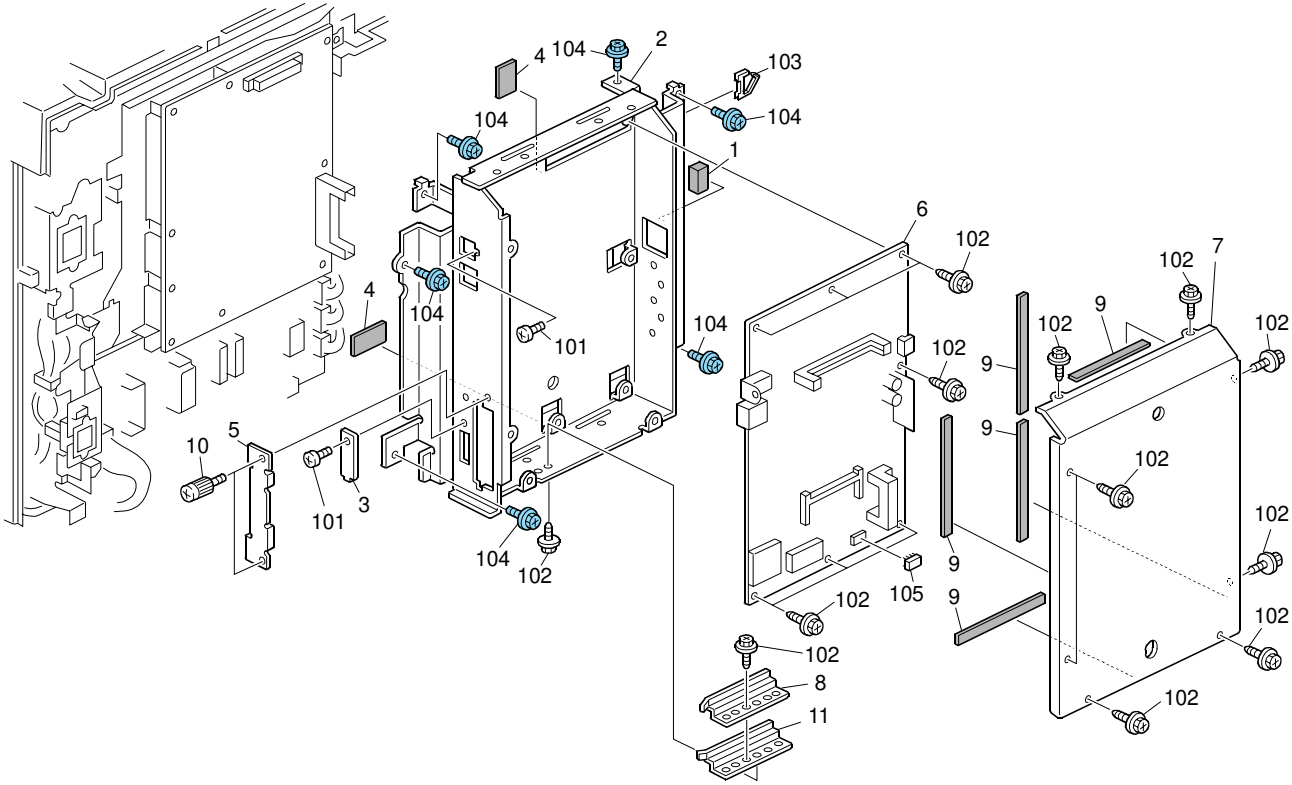

43.Controller Board

Index No.	Part No.	Description	Q'ty Per Assembly
1	C262 5625	GASKET:STGZ7-7:L20	1
2	C280 5630	CONTROL UNIT:WELDING	1
3	C257 5639	COVER NO.1	1
4	C262 5622	GASKET:STGZ2-10:L40	2
5	G056 6005	HDD COVER	1
6	C280 5190	PCB:ACU:FROM:ASS'Y	1
7	C257 5636	CONTROL UNIT COVER	1
8	C257 5638	CONTROL BOARD NO.2 GUIDE PLATE	1
9	C262 5623	GASKET:STGZ1-5:L100	5
10	C265 5120	KNOB SCREW:GROOVE TYPE	2
11	C257 5637	CONTROL BOARD NO.1 GUIDE PLATE	1

Index No.	Part No.	Description	Q'ty Per Assembly
101	0353 0060N	BIND SCREW - M3X6	
102	0451 3006N	TAPPING SCREW - 3X6	
103	1105 0723	CLAMPS:WES-0507	
104	0454 3006Q	TAPPING SCREW - M3X6	
105	1407 7459	RAM:FM25V05-PGC(REV.AB)	

44. Decals and Documents

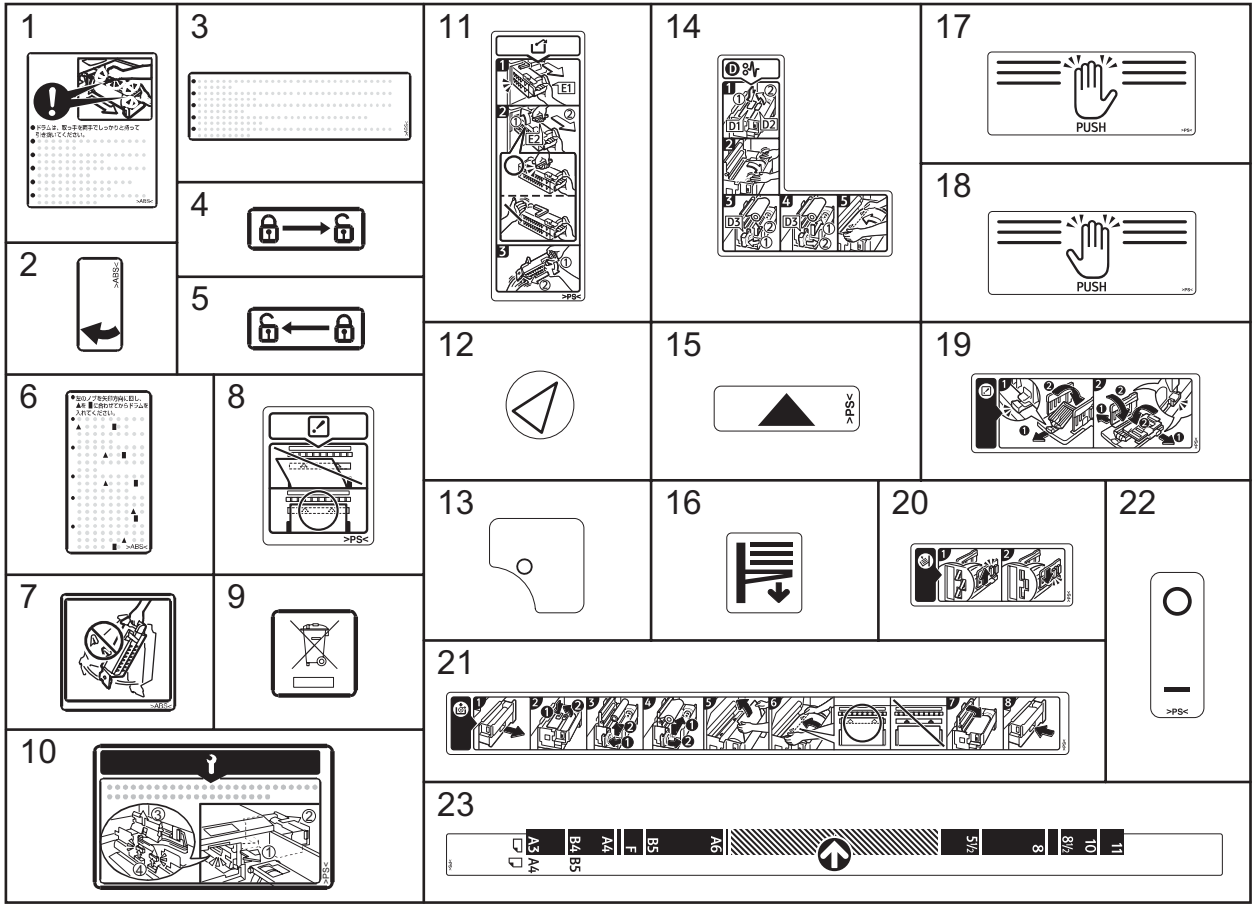

44.Decals and Documents

Index No.	Part No.	Description	Q'ty Per Assembly
1	C229 2399	DECAL - DRUM OPERATION	1
2	C229 3529	DECAL - DELIVERY TABLE SLIDER	1
3	C233 1290	DECAL - CAPTION LED	1
4	C235 2813	DECAL - SIDE FENCE - RIGHT	1
5	C235 2814	DECAL - SIDE FENCE - LEFT	1
6	C239 1356	DECAL- CYLINDER OPERATION	1
7	C239 3528	DECAL - MASTER EJECT BOX	1
8	C259 1351	CAUTION DECAL:MASTER SET	1
9	C262 1356	DECAL:CAUTION CHART:HARNESS:SERVICE	1
10	C262 1359	DECAL:CAUTION CHART:GEAR:SERVICE:EXP	1
11	C265 1325	DECAL:OPERATION INSTRUCTIONS:MASTER EJECTION	1
12	C269 1366	DECAL:POSITIONING DISPLAY:PRESSURE PLATE	1
13	C269 1367	DECAL:POSITIONING DISPLAY:CASE:MASTER EJECTION	1
14	C269 1978	DECAL:MASTER:MISFEED REMOVAL	1
15	C272 2098	DECAL:MASTER:POSITIONING DISPLAY	2
16	C279 1330	DECAL:FALL:PAPER FEED TRAY	1
17	C279 2048	DECAL:OPEN AND CLOSE:PLOTTER:LEFT	1
18	C279 2049	DECAL:OPEN AND CLOSE:PLOTTER:RIGHT	1
19	C279 4197	DECAL:OPERATION INSTRUCTIONS:PAPER EXIT UNIT	1
20	C279 4198	DECAL:GRIP:CASE	1
21	C280 1333	DECAL:MASTER SET INSTRUCTIONS	1
22	C280 1374	DECAL:MAIN SWITCH:EU	1
23	C280 2951	DECAL:SCALE:PAPER	1

Index No.	Part No.	Description	Q'ty Per Assembly

PARTS INDEX

PM Parts Index

Section Name	Part No.	Description in Service Manual	Description in Parts Catalog	Q'ty Per Assembly	Page and Index No.
Drive Section 2	C257 1022	DRUM DRIVE SHAFT ASS'Y	Main Drive Unit	1	17 - 1
Paper Feed Section 3	C238 2835	PAPER FEED ROLLER	Paper Pick-up Rollser/Paper Feed Roller	2	27 - 29
Paper Feed Section 4	C257 2886	SEPARATION PAD - A	Friction Pad - A	1	29 - 21
	C257 2895	SEPARATION PAD - B	Friction Pad - B	1	29 - 31
Pressure Cylinder 1	C257 3002	CLAMP	Paper Clamper	1	35 - 21
Pressure Cylinder 2	C257 3370	CLEANER BRACKET	Feed Encorder Brush Bracket	1	37 - 28
Drum Unit 2	C257 2316	SHIELD SCREEN ASS'Y	Cloth Screen	1	49 - 5

Parts Index

Part No.	Description	Page and Index No.
A049 3371	MAGNET	79 - 19
A100 1714	REFLECTOR	59 - 9
A193 1766	WIRE CLAMP	59 - 14
A193 1769	CLAMP - REAR WIRE	59 - 19
A250 1752	EXPOSURE GLASS	57 - 11
A250 1791	2ND SCANNER SHOE	59 - 16
A250 5725	ROCKER SWITCH	13 - 24
A267 1089	GROUNDING PLATE - UPPER REAR	57 - 18
A376 1257	SPACER - M4X6X6	69 - 31
A659 1272	DOOR CATCH	3 - 8
B065 1374	CLOTH - DF EXPOSURE GLASS	3 - 21
B065 4180	SPACER - 16MM	63 - 24
B180 1743	SBU WASHER	17 - 26
B213 5225	LCD:HVGA:SH:BL	7 - 12
B223 1317	SCREW	29 - 16
B238 1715	STEPPER MOTOR DC3.9V	61 - 2
B238 1762	GROUND PLATE - STEPPER MOTOR	61 - 4
B238 1792	TIMING BELT - 157ST1.5-4.0	61 - 5
B238 1793	BUSHING SPACER	61 - 3
B238 1803	DOCUMENT FEEDER BRACKET	57 - 3
B238 1807	PULLEY	59 - 5
B390 1759	SHAFT:SCALE	57 - 13
B700 4327	TIMING BELT:B40S2M90	69 - 9
B830 3504	TIMING BELT - 40S2M100	45 - 7
C200 3712	PULLEY	27 - 14
C201 4604	DRUM RAIL ROLLER	29 - 5
C201 4604	DRUM RAIL ROLLER	47 - 23
C207 4672	GEAR - 36Z	19 - 26
C209 3615	SPACER - 6*12*3	17 - 27
C209 4114	GEAR - 20/27Z	27 - 17
C209 5092	RUBBER PLATE LEVER	23 - 13
C209 6163	SPACER - 10X18X1	63 - 10
C217 5102	SPRING WASHER	17 - 25

Part No.	Description	Page and Index No.
C217 5102	SPRING WASHER	47 - 3
C218 2525	STEPPED SCREW - M4	41 - 7
C218 4038	BUSHING WASHER - M8	71 - 11
C219 4071	GEAR - 17Z	69 - 4
C229 1039	MOTOR GEAR	15 - 15
C229 1064	BALL BEARING 68000ZZ	15 - 17
C229 1083	REAR GUIDE SHAFT	39 - 25
C229 1096	STAND M28	9 - 2
C229 1121	RELAY GEAR SHAFT	19 - 13
C229 1130	RELAY GEAR ASS'Y	19 - 9
C229 1136	TIMING PULLEY - JOB SEPARATOR	39 - 29
C229 1137	DRIVE RELAY GEAR	39 - 38
C229 1139	TIMING BELT - S2M190	39 - 26
C229 1140	FEED ROLLER DRIVE GEAR	19 - 27
C229 1142	TIMING BELT - S5M780	19 - 8
C229 1151	GEAR PULLEY	15 - 10
C229 1154	TIMING BELT	15 - 3
C229 1155	DRIVEN SHAFT GEAR	39 - 40
C229 1160	DIAL ADJUSTER	39 - 4
C229 1161	DIAL DRIVE PULLEY - 20Z	39 - 3
C229 1163	TIMING BELT - S3M118Z	39 - 1
C229 1175	WORM WHEEL	17 - 16
C229 1177	SHIFT SENSOR ENCODER	51 - 12
C229 1187	TIMING BELT - PRESSURE CYLINDER DRIVE	19 - 3
C229 1198	LOWER TIMING PULLEY - CYLINDER DRIVE	19 - 25
C229 1979	STAY - PLOTTER COVER	63 - 17
C229 2006	BUSHING	67 - 22
C229 2058	LOWER GUIDE LINK	67 - 26
C229 2102	DRIVE GEAR - 26Z	69 - 14
C229 2102	DRIVE GEAR - 26Z	75 - 4
C229 2103	WORM GEAR	69 - 15
C229 2104	IDLE GEAR	69 - 13
C229 2107	ACTUATOR GEAR	69 - 23

Part No.	Description	Page and Index No.
C229 2112	RELEASE CAM	71 - 15
C229 2113	RELEASE ROLLER	71 - 14
C229 2189	MASTER FLANGE SPRING	63 - 16
C229 2281	MASTER TENSION ROLLER	9 - 1
C229 2281	MASTER TENSION ROLLER	13 - 13
C229 2391	STOPPER BRACKET	47 - 48
C229 2392	STOPPER GUIDE	47 - 49
C229 2394	SPRING PLATE	47 - 28
C229 2396	SPRING PLATE	47 - 22
C229 2399	DECAL - DRUM OPERATION	47 - 21
C229 2399	DECAL - DRUM OPERATION	89 - 1
C229 2405	DRUM STOPPER ARM	47 - 18
C229 2406	DRUM LOCK SPRING	47 - 19
C229 2423	FIXING PLATE	49 - 12
C229 2428	SLIDER	49 - 9
C229 2435	DRIVE GEAR - 50Z	49 - 24
C229 2451	INK ROLLER	55 - 16
C229 2458	DOCTOR ROLLER	55 - 19
C229 2459	GEAR - 37Z	55 - 4
C229 2473	ADJUSTING PLATE - DOCTOR ROLLER	55 - 5
C229 2478	GEAR - 19Z	55 - 3
C229 2479	SUPPORT STAY	55 - 13
C229 2488	INK HOLDER SLIDER	51 - 5
C229 2490	INK BOTTLE BRACKET	53 - 4
C229 2491	INK SENSOR BRACKET	53 - 7
C229 2493	RIGHT INK HOLDER	51 - 2
C229 2496	RIGHT GUIDE - SLIDE RAIL	51 - 1
C229 2499	LEFT GUIDE - SLIDE RAIL	51 - 4
C229 2500	LEFT INK HOLDER	51 - 3
C229 2542	HARNESS COVER	53 - 16
C229 2544	INK ROLLER RING	55 - 37
C229 2558	MOTOR BRACKET	53 - 2
C229 2563	SENSOR BRACKET	53 - 12

Part No.	Description	Page and Index No.
C229 2571	SHIFT MOTOR BRACKET	51 - 13
C229 2576	WORM GEAR	51 - 16
C229 2580	SLIDE FIXED PLATE	51 - 20
C229 2581	DRUM H.P SENSOR BRACKET	51 - 18
C229 2582	DRUM SHIFT SENSOR BRACKET	51 - 14
C229 2583	SLIDER	51 - 19
C229 2605	CLAMPER SEAL	49 - 7
C229 2609	SPRING PLATE	51 - 21
C229 2615	SLIDE RAIL ROLLER	9 - 7
C229 2624	SHIFT DRIVE GEAR	51 - 17
C229 2626	DRUM POSITION PLATE - SMALL	13 - 20
C229 2647	DRUM SHAFT	49 - 17
C229 2780	SIDE FENCE RACK - RIGHT	23 - 25
C229 2781	SIDE FENCE RACK	23 - 19
C229 2784	GROUNDING PLATE	23 - 20
C229 2793	SIDE FENCE STOPPER	23 - 7
C229 2794	TENSION SPRING PLATE	23 - 21
C229 2820	PRESSURE RELEASE PLATE	25 - 21
C229 2824	GEAR - 20Z	25 - 3
C229 2829	LIFT UP SHAFT	25 - 4
C229 2840	PAD	25 - 14
C229 2846	SHEET:GUIDE PLATE:PAPER FEED ROLLER	31 - 31
C229 2856	WORM WHEEL GEAR - 14Z/40Z	27 - 12
C229 2857	GEAR - 14Z/42Z	27 - 45
C229 2857	GEAR - 14Z/42Z	29 - 13
C229 2858	SEPARATION CONTROL RACK	27 - 9
C229 2862	PAPER PRESSURE LEVER	27 - 21
C229 2863	BUSHING	27 - 22
C229 2907	REGISTRATION ROLLER PULLEY - 14Z	33 - 25
C229 2946	MOTOR PULLEY	21 - 18
C229 2947	DRIVE PULLEY - PAPER SEPARATION	27 - 1
C229 2948	TIMING BELT - 80-XL-050	21 - 21
C229 2950	FEED ROLLER DRIVE PULLEY	27 - 35

Part No.	Description	Page and Index No.
C229 2952	SPRING PLATE - PAPER TRAY	23 - 26
C229 2954	SPRING PLATE	23 - 30
C229 3133	CONTROL PLATE - CAM DRIVE	39 - 41
C229 3135	BUSHING - CAM SHAFT	39 - 6
C229 3145	WORM WHEEL - 50Z/16Z	17 - 3
C229 3145	WORM WHEEL - 50Z/16Z	39 - 16
C229 3145	WORM WHEEL - 50Z/16Z	43 - 25
C229 3146	GEAR - 80Z/16Z	39 - 15
C229 3148	BUSHING	39 - 13
C229 3164	RELEASE SHAFT ARM	37 - 8
C229 3181	ADJUSTING CAM	19 - 28
C229 3182	PRESSURE CYLINDER GEAR	19 - 29
C229 3194	PRESSURE CYLINDER GEAR	39 - 42
C229 3196	JOINT FLANGE	19 - 23
C229 3196	JOINT FLANGE	35 - 3
C229 3207	RING - M14	37 - 12
C229 3227	PRESSURE CYLINDER SHAFT GUIDE	37 - 16
C229 3476	SPRING PLATE	77 - 8
C229 3478	ROLLER UNIT ARM	77 - 10
C229 3481	COLLAR - 6MM	77 - 22
C229 3486	BUSHING - MASTER EJECT ROLLER	77 - 6
C229 3494	MASTER PRESS ARM SHAFT	79 - 20
C229 3495	MASTER STRIPPER PAWL	79 - 15
C229 3502	SLIDE LOCK LEVER	79 - 11
C229 3505	UPPER CASE RELEASE LEVER	79 - 24
C229 3513	UPPER CASE GRIP	79 - 21
C229 3514	GROUNDING PLATE	79 - 14
C229 3529	DECAL - DELIVERY TABLE SLIDER	79 - 10
C229 3529	DECAL - DELIVERY TABLE SLIDER	89 - 2
C229 3530	DRIVEN PULLEY - 18Z	77 - 4
C229 3531	GEAR/PULLEY - 26Z/16T	77 - 5
C229 3532	TIMING BELT - S2M76	77 - 3
C229 3536	BELT TENSION COLLAR	77 - 15

Part No.	Description	Page and Index No.
C229 3537	TRANSPORT LOWER GEAR - 26Z	77 - 2
C229 3542	3RD GEAR - 22Z	75 - 18
C229 3544	GEAR PULLEY - 18Z/60Z	75 - 20
C229 3545	2ND GEAR - 8Z/32Z	75 - 17
C229 3547	JOINT CAM	75 - 2
C229 3548	JOINT SHAFT	75 - 1
C229 3551	TIMING BELT - S2M160	75 - 19
C229 3557	GEAR - 17Z	75 - 23
C229 3558	2ND GEAR - 18Z/49Z	75 - 25
C229 3582	POSITIONING SENSOR BRACKET	75 - 10
C229 3585	SECTOR GEAR	39 - 35
C229 3586	DRIVEN GEAR	39 - 36
C229 3872	TIMING PULLEY	43 - 13
C229 3874	TRANSPORT BELT	43 - 3
C229 3878	KNOB	43 - 17
C229 3911	GEAR - 25Z/51Z	43 - 24
C229 3961	DRIVE PULLEY	39 - 27
C229 3966	DRIVE GEAR	39 - 28
C229 3977	PAPER EXIT PAWL SHAFT	11 - 3
C229 4053	GUIDE PIN	21 - 4
C229 4056	WORM GEAR	21 - 10
C229 4675	SEPARATOR COVER SHAFT	41 - 15
C229 4708	SCREW SHAFT	45 - 10
C229 4709	SCREW SHAFT BOSS	45 - 14
C229 4711	TIMING PULLEY	45 - 11
C229 4715	SLIDE DRIVE GEAR	45 - 13
C229 4718	SLIDER HOLDER	45 - 16
C229 4724	HARNESS CLAMP	45 - 9
C229 4725	SEPARATOR SLIDER	45 - 17
C229 4726	SEPARATOR ARM LINK	45 - 19
C229 4729	SEPARATOR ARM	45 - 21
C229 4734	SLIDER SPRING PLATE	45 - 15
C229 5212	INK SENSOR HARNESS	47 - 8

Part No.	Description	Page and Index No.
C229 5646	SAFETY SWITCH SPRING	13 - 9
C230 2199	MAGNET CATCH SPACER	67 - 18
C233 1065	SCREW M3X4	15 - 18
C233 1074	TORQUE LIMITER 55KGF CM	15 - 19
C233 1079	SHIELDED SLEEVE:TORQUE LIMITER	15 - 20
C233 1092	TIMING PULLEY:DRIVE:DRUM	19 - 11
C233 1093	HEXAGONAL SET SCREW:LOCK:M4X20	19 - 6
C233 1138	DRIVE SHAFT	39 - 37
C233 1290	DECAL - CAPTION LED	5 - 7
C233 1290	DECAL - CAPTION LED	89 - 3
C233 2215	SOLENOID COVER	67 - 17
C233 2493	INK SENSOR TERMINAL	53 - 8
C233 2496	INK SENSOR TERMINAL - CENTER	53 - 21
C233 2625	DRUM POSITION PLATE	13 - 11
C233 2645	REAR DRUM FRAME STAND	47 - 30
C233 3191	JOINT CORE	17 - 30
C233 3902	DISCHARGE BRUSH - ADJUSTING PLATE	43 - 11
C233 4405	ANTISTATIC BRUSH	41 - 13
C233 4446	ADJUSTING PLATE - BASE	41 - 11
C233 4655	HARNESS COVER SHEET	45 - 26
C235 2786	RIGHT SIDE FENCE SLIDER ASS'Y	23 - 16
C235 2791	RIGHT SIDE FENCE	23 - 15
C235 2796	LEFT SIDE FENCE SLIDER ASS'Y	23 - 6
C235 2802	LEFT SIDE FENCE ASS'Y	23 - 14
C235 2813	DECAL - SIDE FENCE - RIGHT	23 - 42
C235 2813	DECAL - SIDE FENCE - RIGHT	89 - 4
C235 2814	DECAL - SIDE FENCE - LEFT	23 - 43
C235 2814	DECAL - SIDE FENCE - LEFT	89 - 5
C235 2815	LOCK LEVER - RIGHT SIDE FENCE	23 - 38
C235 2816	RIGHT LOCK LEVER SPRING PLATE ASS'Y	23 - 40
C235 2817	SPRING PLATE:LEVER:LOCK:RIGHT	23 - 39
C235 2818	PAD:LEVER:LOCK	23 - 36
C235 2819	LOCK LEVER - LEFT SIDE FENCE	23 - 34

Part No.	Description	Page and Index No.
C235 2820	LEFT LOCK LEVER SPRING PLATE ASS'Y	23 - 37
C235 2821	SPRING PLATE:LEVER:LOCK:RIGHT	23 - 35
C235 4492	RIGHT FRONT PAPER GUIDE	41 - 8
C235 4494	RIGHT REAR PAPER GUIDE	41 - 21
C235 4495	ANTISTATIC BRUSH	41 - 22
C236 2004	COMPRESSION SPRING	67 - 23
C236 2010	LOWER SPACER - REVERSE ROLLER	67 - 11
C236 2011	PULLEY - UPPER REVERSE ROLLER	67 - 27
C236 2021	SLOW DOWN PULLEY	69 - 29
C236 2022	IDLER GEAR - PLATEN	69 - 26
C236 2024	IDLER GEAR - TENSION	69 - 27
C236 2066	RIGHT DUCT GUIDE PLATE	73 - 15
C236 2082	PLATEN GEAR	65 - 18
C236 2093	COMPRESSION SPRING - 6.9N	71 - 12
C236 2190	MASTER PRESSURE SPRING	63 - 11
C236 2222	TIMING BELT - B106MXL9.5	69 - 25
C236 2359	CONNECTOR SLIDER	47 - 10
C236 2370	LEVER COLLAR	47 - 33
C236 2464	SIDE PLATE STAY	55 - 30
C236 2465	GROUND PLATE - INK ROLLER	55 - 21
C236 2466	MIDDLE DRIVE GEAR	55 - 15
C236 2468	BEARING HOLDER	55 - 2
C236 2498	DRUM METAL SCREEN SHIELD	49 - 28
C236 2540	OIL SUPPLY ROLLER ASS'Y	55 - 14
C236 2547	SHIFT MOTOR COVER	51 - 10
C236 2562	FRONT SPRING	55 - 26
C236 2564	WORM WHEEL GEAR	55 - 28
C236 2565	INK MIDDLE GEAR	55 - 29
C236 2566	RETURN GEAR	55 - 11
C236 2575	INK SUPPLY ROLLER ARM	55 - 8
C236 2595	CLAMP PROTECTION	49 - 20
C236 2608	SWITCH ARM	47 - 26
C236 2848	SLIDER BUSHING	29 - 28

Part No.	Description	Page and Index No.
C236 2851	UPPER SLIDER	29 - 29
C236 2860	SEPARATION RACK ASS'Y	29 - 17
C236 2862	GEAR - 32Z/14Z	27 - 16
C236 2862	GEAR - 32Z/14Z	29 - 34
C236 2863	GEAR - 24Z	29 - 12
C236 2864	WORM WHEEL - GEAR	29 - 23
C236 2865	WORM WHEEL - GEAR	29 - 24
C236 2866	RUBBER WASHER	29 - 25
C236 2880	SEPARATION PAD HOLDER BRACKET	29 - 6
C236 2881	SEPARATION PAD HOLDER BRACKET	29 - 4
C236 3237	COLLAR 6X11.2X1.5	35 - 22
C236 3238	COLLAR 6X8X12.5	35 - 10
C236 3248	SLIDER EXIT PAWL	35 - 18
C236 3259	BALL BEARING-5X11X4	35 - 25
C236 3501	EJECT BOX SLIDER	79 - 9
C236 3525	RELEASE SPRING	79 - 31
C236 3978	EXIT PAWL	11 - 1
C236 5673	HDD GROUND PLATE	17 - 9
C236 5673	HDD GROUND PLATE	83 - 5
C238 1339	KEY COUNTER PLATE NUT	5 - 11
C238 2835	PAPER FEED ROLLER	27 - 29
C238 2947	PICK-UP PULLY	27 - 34
C238 3556	TORQUE LIMITER - 2500G	75 - 24
C239 1182	GUARD:CE-012S:23.5MM	73 - 9
C239 1356	DECAL- CYLINDER OPERATION	5 - 3
C239 1356	DECAL- CYLINDER OPERATION	89 - 6
C239 1993	REAR PLOTTER SLIDE RAIL SPACER	71 - 17
C239 2064	LOWER DUCT COVER	71 - 21
C239 2066	DUCT COVER GRIP	71 - 20
C239 2276	PLOTTER FRONT SLIDE RAIL SPACER	9 - 12
C239 2820	PAPER FEED GUIDE PLATE COVER	25 - 31
C239 2925	DOUBLE FEED SENSOR UPPER BRACKET	33 - 4
C239 2927	LOWER FEED ROLLER GUIDE PLATE	33 - 20

Part No.	Description	Page and Index No.
C239 2929	CABLE BRACKET	33 - 6
C239 2937	PRESSURE RELEASE CAM	21 - 16
C239 3528	DECAL - MASTER EJECT BOX	79 - 26
C239 3528	DECAL - MASTER EJECT BOX	89 - 7
C239 4401	FRONT EXIT BRACKET	41 - 24
C239 4404	REAR EXIT BRACKET	41 - 23
C239 4491	PAPER GUIDE - FRONT	41 - 10
C239 4492	PAPER GUIDE - REAR	41 - 9
C239 4493	BASE:GUIDE:EXIT:RIGHT FRONT	41 - 29
C239 4497	BASE:GUIDE:EXIT:RIGHT REAR	41 - 30
C239 4673	SEPARATOR COVER	41 - 17
C244 1036	DRIVE BRACKET	15 - 11
C244 1040	HOLDER:BEARING CASE:PEEN	15 - 12
C244 1044	SPACER	39 - 45
C244 1048	TENSION BRACKET	15 - 14
C244 1048	TENSION BRACKET	17 - 8
C244 1067	TENSION HOLDER	15 - 22
C244 1075	STAY:LEFT	39 - 20
C244 1082	SHAFT:HALE UNIT:FRONT	39 - 10
C244 1090	SHAFT:DRIVE:DRUM:ASS'Y	19 - 18
C244 1093	TIMING PULLEY BRACKET	19 - 7
C244 1098	PAN HEAD SCREW:LOCK:M4X4	19 - 33
C244 1099	SCREW M4X6	19 - 21
C244 1124	SECTOR GEAR - IMAGE SHIFT	19 - 10
C244 1126	SHIELDING PLATE:POSITIONING SENSOR	19 - 14
C244 1127	GUIDE PLATE:HEAVEN AND EARTH:RIGHT	19 - 1
C244 1128	BRACKET:SUPPORTING PLATE:DRIVE	17 - 7
C244 1145	ROLLER:BELT TENSIONER:ASS'Y	15 - 2
C244 1145	ROLLER:BELT TENSIONER:ASS'Y	17 - 21
C244 1162	PULLEY SPACER	39 - 2
C244 1164	BRACKET DIAL ASS'Y	39 - 9
C244 1167	PULLEY:DRIVEN:ASS'Y	39 - 8
C244 1173	DIAL SPRING	15 - 5

Part No.	Description	Page and Index No.
C244 1254	CUSHION - FRONT DOOR	3 - 5
C244 1258	DOOR SUPPORT PLATE	3 - 4
C244 1259	DOOR CATCH BRACKET	3 - 9
C244 1264	SAFETY SWITCH BRACKET	3 - 3
C244 1272	LEFT COVER BRACKET	13 - 2
C244 1291	SUPPORT PLATE - RIGHT LOWER	23 - 29
C244 1994	PLOTTER SLIDE RAIL SCREW	63 - 27
C244 2016	SCREW:GUIDE	69 - 32
C244 2042	GUIDE PLATE:DUCT:OPEN AND CLOSE:ASS'Y	67 - 10
C244 2047	RIGHT REVERSE ROLLER GUIDE	67 - 13
C244 2052	ARM:OPEN AND CLOSE:GUIDE PLATE:ASS'Y	67 - 14
C244 2057	LINK:UPPER:OPEN AND CLOSE:GUIDE PLATE	67 - 12
C244 2067	DUCT COVER MAGNET	71 - 22
C244 2068	CASE:DUCT:LOWER:ASS'Y	73 - 14
C244 2098	BRACKET:STOPPER:BASE	71 - 10
C244 2139	COVER:MASTER:LOWER:ASS'Y	67 - 16
C244 2187	SHAFT:FLANGE:MASTER:RIGHT	63 - 14
C244 2188	STAY:FLANGE:FRONT	63 - 13
C244 2193	FRONT BRACKET	63 - 9
C244 2198	MAGNET CATCH:ASS'Y	63 - 4
C244 2198	MAGNET CATCH:ASS'Y	67 - 19
C244 2266	BEARING HOLDER	33 - 1
C244 2267	CONNECTOR SPRING	31 - 14
C244 2277	BRACKET:SLIDE RAIL:REAR:PLOTTER	9 - 11
C244 2353	FRONT MAGNET CATCH BRACKET	47 - 16
C244 2357	SWITCH LEVER KNOB	47 - 6
C244 2360	CONNECTOR BRACKET	47 - 9
C244 2362	DRUM RELEASE GRIP	47 - 17
C244 2365	LEVER SWITCH BRACKET	47 - 7
C244 2377	MAGNET CATCH BRACKET	47 - 13
C244 2385	GRIP RAIL	47 - 20
C244 2390	SCREW:STOPPER:DRUM	47 - 46
C244 2413	DRUM LOCK SCREW	47 - 24

Part No.	Description	Page and Index No.
C244 2419	FLANGE:DRUM:REAR:INNER:ASS'Y	49 - 10
C244 2424	PLATE NUT	49 - 13
C244 2431	DRUM POSITIONING PIN	49 - 11
C244 2434	SHIELDING PLATE	49 - 6
C244 2450	POSITIONING PIN DIA5M4	49 - 18
C244 2451	SCREW:TRANSFER/SEPARATION	47 - 47
C244 2452	SCREW M4X8	39 - 51
C244 2452	SCREW M4X8	47 - 42
C244 2453	LEVER SCREW	47 - 2
C244 2454	SCREW M3X6	53 - 24
C244 2484	HOLDER:INK	51 - 6
C244 2487	INK HOLDER KNOB	51 - 7
C244 2489	HOLDER:INK:2:ASS'Y	51 - 6
C244 2494	INK FRAME SLIDE RAIL - LEFT	53 - 10
C244 2495	INK FRAME SLIDE RAIL - RIGHT	53 - 11
C244 2530	HOSE BAND	53 - 19
C244 2532	INK TUBE	53 - 20
C244 2601	FRONT STEPPED SCREW	49 - 22
C244 2611	RAIL:MACHINE OR COPIER:WELDING	9 - 8
C244 2620	BRACKET:DRUM:LEFT	13 - 10
C244 2631	LIMIT SENSOR BRACKET	39 - 33
C244 2633	STEPPED SCREW	39 - 48
C244 2635	BRACKET:DRUM STAY:FRONT	29 - 35
C244 2636	BRACKET:DRUM STAY:REAR	29 - 36
C244 2644	REAR SIDE PLATE	47 - 31
C244 2751	RIGHT SIDE PLATE	25 - 10
C244 2754	LEFT SIDE PLATE	25 - 6
C244 2755	LIFT UP RACK - PAPER TABLE	25 - 1
C244 2757	PAPER TABLE LOWER STAY	25 - 19
C244 2759	STAY	25 - 8
C244 2763	LOWER SHIELD PLATE	5 - 16
C244 2764	LOWER SHIELD PLATE A	5 - 14
C244 2765	LOWER SHIELD PLATE B	5 - 15

Part No.	Description	Page and Index No.
C244 2777	BRACKET:SENSOR:PAPER TRAY	23 - 31
C244 2778	HARNESS HOLDER	23 - 32
C244 2785	RIGHT STAY - PAPER TABLE	25 - 28
C244 2786	LEFT STAY - PAPER TABLE	25 - 18
C244 2799	SCREW:LOCK:M4	25 - 17
C244 2804	SIDE FENCE GRIP	23 - 5
C244 2807	PAPER TABLE - FIXED	25 - 29
C244 2810	PAPER SET SENSOR BRACKET	25 - 27
C244 2814	RIGHT ADJUSTING PLATE	25 - 25
C244 2815	LEFT ADJUSTING PLATE	25 - 24
C244 2816	PRESSURE RELEASE ARM - RIGHT	25 - 23
C244 2817	PRESSURE RELEASE ARM - LEFT	25 - 22
C244 2826	ANCHOR PAPER TRAY RIGHT	25 - 7
C244 2827	SPRING ANCHOR - LEFT	25 - 2
C244 2832	DRUM STAY - PAPER FEED ASS'Y	29 - 18
C244 2836	SHAFT:PAPER FEED ROLLER	27 - 26
C244 2838	SHAFT:PICKUP	27 - 30
C244 2839	MAGNET CATCH BRACKET	25 - 12
C244 2840	GUIDE RAIL BASE	29 - 20
C244 2845	PAPER FEED GUIDE PLATE	31 - 20
C244 2848	UPPER PRESSURE PLATE	29 - 27
C244 2855	LOWER PRESSURE PLATE	29 - 15
C244 2860	SPRING BRACKET	27 - 8
C244 2866	HEIGHT SENSOR BRACKET	27 - 25
C244 2871	MOTOR BRACKET	29 - 19
C244 2875	MOTOR BRACKET	29 - 11
C244 2879	SENSOR BRACKET	29 - 2
C244 2880	COVER - SEPARATION SUB-UNIT	29 - 22
C244 2893	RIGHT PRESSURE ARM	33 - 12
C244 2894	LEFT PRESSURE ARM	33 - 10
C244 2898	PRESSURE RELEASE LOCK ARM - RIGHT	33 - 13
C244 2899	PRESSURE RELEASE LOCK ARM - LEFT	33 - 9
C244 2900	PRESSURE RELEASE SHAFT	33 - 11

Part No.	Description	Page and Index No.
C244 2905	FEED ROLLER-UPPER	33 - 8
C244 2919	GUIDE PLATE SPACER	33 - 19
C244 2921	REGISTRATION SENSOR BRACKET	33 - 14
C244 2930	GUIDE PLATE	21 - 14
C244 2931	PULLEY COVER	21 - 13
C244 2949	TIMING BELT:75-MXL-8.0	27 - 33
C244 2955	GROUND PLATE	23 - 27
C244 3090	FEED ENCODERBRAKET	37 - 19
C244 3091	PAPER FEED CONTROL GUIDE	37 - 22
C244 3092	PLATE:ENCODER:FRONT	35 - 1
C244 3093	PAPER FEED CONTROL ENCODER 450PUL	35 - 5
C244 3094	PLATE:ENCODER:REAR	35 - 4
C244 3096	SHIELDING PLATE:PAPER FEED CONTROL	35 - 2
C244 3161	BRACKET:PRESSURE RELEASE:FRONT	37 - 3
C244 3163	BRACKET:PRESSURE RELEASE:REAR	37 - 13
C244 3183	GEAR:PRESS DRAM UNIT:AUXILIARY	19 - 31
C244 3184	STOPPER FLANGE	19 - 30
C244 3185	GEAR ADJUSTER	19 - 4
C244 3186	TENSION SPRING:GEAR:PRESS DRAM	19 - 32
C244 3195	SPACER:GEAR	39 - 34
C244 3205	SHAFT:CONTACT POINT	37 - 17
C244 3206	STOPPER:CONTACT POINT	37 - 1
C244 3226	STOPPER:BEARING:PRESS DRAM UNIT:FRONT	37 - 14
C244 3244	SPRING:CLAMP:4N	35 - 9
C244 3252	GUIDE:DRIVE:PAWL:EXHAUST:ASS'Y	35 - 15
C244 3261	ARM:PAWL:ASS'Y	35 - 13
C244 3281	BRACKET:PRESSURE:SPRING:FRONT	37 - 4
C244 3282	BRACKET:PRESSURE:SPRING:REAR	37 - 24
C244 3310	PAWL:EXHAUST:CLAMP:PEEN	35 - 20
C244 3454	GUIDE:UPPER MIDDLE	77 - 25
C244 3456	STOPPER:UPPER:TRANSPORT ROLLER	77 - 41
C244 3461	STAY:ROLLER:ARM	77 - 16
C244 3462	SIDE PLATE:REAR:SLIDE	77 - 18

Part No.	Description	Page and Index No.
C244 3465	GUIDE:LOWER:TRANSPORT ROLLER	77 - 31
C244 3467	BRACKET:PHOTO REFIECTION SENSOR	77 - 29
C244 3471	GRIP:LOCK:KNOB:PRINTING	77 - 9
C244 3474	LOCK:SLIDE RAIL	77 - 11
C244 3487	SIDE PLATE:FRONT:SLIDE:PEEN	77 - 37
C244 3488	COVER:HARNESS:SENSOR	77 - 33
C244 3493	MASTER PRESS ARM	79 - 17
C244 3496	BRACKET:BLADE:PRESSURE PLATE	79 - 16
C244 3497	EJECT BOX GUIDE ASS'Y	79 - 8
C244 3499	SHEET:EXHAUST:GUIDE PLATE:CASE	79 - 13
C244 3509	BRACKET:LOCK:PRESSURE PLATE	79 - 22
C244 3510	DOOR:EXHAUST:CASE:ASS'Y	79 - 5
C244 3517	CASE:LOWER LEFT	79 - 18
C244 3518	DRUM STAY:SHEET:CASE:ADHESION	79 - 12
C244 3521	GRIP:PULL OUT:FIX	79 - 27
C244 3522	STEPPED SCREW	21 - 5
C244 3522	STEPPED SCREW	79 - 4
C244 3523	EJECT BOX LOCK ARM	79 - 6
C244 3524	EJECT BOX LOCK LEVER	79 - 2
C244 3525	TENSION SPRING:9N:GRIP:MASTER EJECTION	79 - 3
C244 3526	BRACKET:GRIP:PULL OUT:FRONT	79 - 7
C244 3533	BRACKET:BELT TENSIONER:PEEN	77 - 14
C244 3543	BRACKET:DC MOTOR:TRANSPORT	75 - 26
C244 3549	BRACKET:JOINT:TRANSPORT	75 - 5
C244 3563	BRACKET:DC MOTOR:PRESSURE	75 - 16
C244 3589	STOPPER:SLIDE RAIL:MACHINE OR COPIER	77 - 19
C244 3596	LOWER GUIDE STAY - TRANSFER ROLLER	11 - 8
C244 3609	GUIDE:MASTER:TRAILING EDGE	77 - 13
C244 3621	GUIDE:EXFLOLIATION UNIT:REAR UPPER	77 - 40
C244 3622	GUIDE:EXFLOLIATION UNIT:FRONT UPPER	77 - 36
C244 3912	VACUUM PLATE GUIDE ARM	43 - 8
C244 3913	BRACKET:ADJUSTING PLATE:DRIVE:ASS'Y	43 - 22
C244 3930	GUIDE PLATE:HALE UNIT:ASS'Y	39 - 30

Part No.	Description	Page and Index No.
C244 3951	LOWER PAPER EXIT SENSOR BRACKET	39 - 22
C244 3968	LEVER:PAWL:MOVEABLE:EXIT:ASS'Y	11 - 6
C244 3976	STOPPER:LEVER:PAWL:MOVEABLE	39 - 39
C244 4001	SECTOR ARM	21 - 1
C244 4051	LINK	21 - 3
C244 4052	SECTOR ARM	21 - 6
C244 4054	MASTER FEED ARM	21 - 8
C244 4111	TAPPING SCREW	43 - 19
C244 4189	BRACKET:CLAMP:OPEN AND CLOSE:ASS'Y	21 - 11
C244 4426	SHOULDER SCREW	39 - 11
C244 4671	BRACKET:PHOTOINTERRUPTOR:ASSORTMENT	45 - 5
C244 4674	SEPARATOR COVER HINGE	41 - 16
C244 4677	CUSHION	41 - 20
C244 4701	BRACKET:BASE:ASSORTMENT	45 - 8
C244 4702	SUPPORTING PLATE:GUIDE:BRACKET:RISE	45 - 25
C244 4703	BRACKET:RISE:ASSORTMENT:PEEN	45 - 24
C244 4730	PRESSURE STAND:PICKUP:MOVEABLE:ADHESION	45 - 22
C244 5125	STEPPED SCREW - M6	15 - 13
C244 5125	STEPPED SCREW - M6	17 - 23
C244 5125	STEPPED SCREW - M6	27 - 32
C244 5125	STEPPED SCREW - M6	47 - 29
C244 5125	STEPPED SCREW - M6	55 - 6
C244 5126	CAM FOLLOWER PLATE	33 - 24
C244 5614	TOTAL COUNTER BRACKET	13 - 17
C244 5615	GUIDE PLATE:POWER SOURCE:MAIN	85 - 11
C244 5645	SAFETY SWITCH LEVER	13 - 8
C244 5731	PAPER FEED MOTOR BRACKET	21 - 20
C244 5734	FEED PRESSUER MOTOR BRACKET	27 - 7
C244 5805	PHOTOINTERRUPTOR	37 - 21
C250 3573	LOCK LEVER	11 - 15
C250 4390	FRONT UPPER GUIDE	81 - 19
C250 4392	SPARE SIDE FENCE - FRONT	81 - 15
C250 4393	REAR UPPER GUIDE	81 - 27

Part No.	Description	Page and Index No.
C250 4395	SPARE SIDE FENCE - REAR	81 - 34
C256 3574	LOCK SPRING	11 - 14
C256 3576	MICRO HARNESS	11 - 17
C256 3576	MICRO HARNESS	31 - 29
C257 1022	DRUM DRIVE SHAFT ASS'Y	17 - 1
C257 1032	GUIDE PLATE ASS'Y	19 - 12
C257 1035	TORQUE LIMITER DRIVE ASS'Y	15 - 4
C257 1036	TORQUE LIMITER ASS'Y	15 - 7
C257 1060	DRIVE TIMING PULLEY	19 - 2
C257 1065	SPACER	19 - 5
C257 1130	PRESSURE GEAR HOLDER	19 - 16
C257 1131	SPRING WASHER GUIDE	19 - 17
C257 1132	PRESSURE GEAR BRACKET	19 - 15
C257 1143	TENSION SPRING	17 - 24
C257 1170	BRACKET	17 - 17
C257 1176	WORM GEAR SHAFT GEAR	17 - 20
C257 1177	SLOW DOWN GEAR	17 - 19
C257 1179	WORM GEAR SHAFT	17 - 13
C257 1180	FAN BRACKET	9 - 17
C257 1183	UPPER BASE BRACKET	9 - 13
C257 1184	UPPER BASE SHAFT	9 - 21
C257 1951	PLOTTER SIDE PLATE - FRONT	73 - 4
C257 1961	PLOTTER SIDE PLATE - REAR	73 - 3
C257 1963	REAR SHAFT	69 - 5
C257 1970	UPPER BASE STOPPER PIN	63 - 15
C257 1977	FRONT COVER	63 - 2
C257 1980	UPPER BASE FRONT SHAFT	63 - 6
C257 1983	REAR COVER	63 - 20
C257 1985	STAY	67 - 3
C257 1987	POSITIONING SPACER	67 - 2
C257 2002	UPPER TENSION ROLLER	65 - 9
C257 2008	REVERSE ROLLER	67 - 7
C257 2009	TENSION ROLLER	67 - 8

Part No.	Description	Page and Index No.
C257 2010	GEAR 36Z	67 - 20
C257 2011	GEAR 20Z	67 - 24
C257 2012	IDLER GEAR	67 - 21
C257 2018	TORQUE LIMITER	65 - 20
C257 2027	GEAR 22Z	69 - 28
C257 2029	REVERSE ROLLER GUIDE PLATE - LOW/MID	73 - 2
C257 2030	REVERSE ROLLER GUIDE PLATE - LOWER	73 - 1
C257 2031	REVERSE ROLLER BRACKET	69 - 7
C257 2034	REVERSE ROLLER GUIDE PLATE	67 - 1
C257 2035	REVERSE ROLLER GUIDE PLATE	67 - 31
C257 2041	LOWER MIDDLE REVERSE ROLLER GUIDE	73 - 23
C257 2073	DUCT CASE	73 - 5
C257 2078	DISCHARGE BRUSH - LOWER	73 - 12
C257 2079	DISCHARGE BRUSH	73 - 13
C257 2087	THERMAL HEAD STAY	71 - 9
C257 2105	CUTTER UNIT	69 - 12
C257 2109	PRESSURE RELEASE BRACKET	69 - 19
C257 2112	CUTTER UNIT BRACKET	69 - 18
C257 2123	THERMAL HEAD SCREW	71 - 24
C257 2128	ADJUSTING PIN COLLAR	71 - 4
C257 2136	LOWER MASTER PLATE GUIDE	63 - 19
C257 2156	PLATENROLLER PLATE BRACKET	65 - 11
C257 2160	UPPER BASE COVER	65 - 3
C257 2162	OPEN AND CLOSE LEVER	65 - 15
C257 2171	UPOPER GUIDE PLATE	65 - 5
C257 2172	OPEN AND CLOSE TENSION SPRING	65 - 14
C257 2175	FRONT TORSION SPRING	63 - 3
C257 2176	REAR TORSION SPRING	63 - 25
C257 2178	LOCK BRACKET	63 - 5
C257 2184	FLANGE MASTER REAR DIA46	63 - 21
C257 2188	MASTER FLANGE BRACKET - REAR	69 - 2
C257 2196	FLANGE MASTER FRONT DIA46	63 - 12
C257 2205	GUIDE PLATE DISCHARGE BRUSH	65 - 6

Part No.	Description	Page and Index No.
C257 2211	CUTTER UNIT PLOTTER	69 - 40
C257 2213	TENSION ROLLER GUIDE ASS'Y	69 - 39
C257 2216	TENSION DISCHARGE BRUSH - LEFT	69 - 36
C257 2218	SENSOR GUIDE PLATE	69 - 38
C257 2221	DISCHARGE BRUSH 207MM TENSION	71 - 1
C257 2222	DISCHARGE BRUSH 20MM TENSION	71 - 3
C257 2226	STEPPER MOTOR BRACKET	69 - 10
C257 2232	HARNESS GUIDE	69 - 16
C257 2234	PRESSURE RELEASE SENSOR BRACKET	69 - 20
C257 2235	REAR HARNESS COVER	69 - 17
C257 2236	PRESSURE RELEASE SENSOR COVER	69 - 21
C257 2239	SENSOR COVER	67 - 4
C257 2241	BASE SPACER	73 - 16
C257 2254	HARNESS COVER	69 - 8
C257 2261	LOCK TENSION SPRING	31 - 24
C257 2263	LOCK STOPPER	31 - 23
C257 2265	MICRO SWITCH LOCK SPACER	31 - 22
C257 2313	DRUM RAIL	47 - 27
C257 2316	SHIELD SCREEN ASS'Y	49 - 5
C257 2353	FRONT HARNESS COVER	47 - 34
C257 2354	FRONT HARNESS COVER	47 - 35
C257 2358	SMALL FRONT COVER	47 - 36
C257 2370	COVER:HARNESS:NO.1	47 - 38
C257 2371	COVER:HARNESS:NO.2	47 - 37
C257 2388	BRACKET:CONNECTOR:DRUM	47 - 40
C257 2410	DRUM DRIVE DISK	49 - 15
C257 2423	DRAM METAL SCREEN SPACER	49 - 26
C257 2424	DRAM METAL SCREEN SPACER	49 - 27
C257 2478	DRAM METAL SCREEN SEAL	49 - 4
C257 2479	FRONT DRAM METAL SCREEN SHIELD	49 - 25
C257 2480	INK HOLDER - SMALL	51 - 25
C257 2485	DRUM SENSOR SHEET	73 - 11
C257 2491	SENSOR BRACKET	51 - 26

Part No.	Description	Page and Index No.
C257 2492	SENSOR COVER	51 - 28
C257 2534	BRACKET	53 - 17
C257 2535	PIPE	53 - 18
C257 2536	SPRING TUBE	53 - 25
C257 2577	DC MOTOR:CAP:ASS'Y	51 - 8
C257 2591	CLAMP BASE ASS'Y	49 - 23
C257 2594	SCREEN STAY - REAR H	49 - 2
C257 2611	CONNECTOR BRACKET	39 - 49
C257 2612	SPRING PLATE	39 - 47
C257 2630	ADJUSTMENT PLATE	13 - 23
C257 2780	PAPER FEED SIDE FENCE PAD	23 - 11
C257 2781	PAPER FEED SIDE FENCE PAD	23 - 12
C257 2812	SPACER:MAGNET CATCH:SIDE FENCE	23 - 44
C257 2833	PAPER FEED ARM	27 - 27
C257 2834	DISCHARGE BRUSH	27 - 3
C257 2835	PAPER FEED ARM BALANCER	27 - 28
C257 2845	SEPARATION PAD PRESSURE PLATE	29 - 33
C257 2850	STAY:PAPER FEED:ASS'Y	27 - 42
C257 2857	PRESSURE RELEASE LEVER SPRING PLATE	27 - 15
C257 2858	PRESSURE RELEASE LINK	27 - 37
C257 2859	PRESSURE RELEASE LEVER	27 - 36
C257 2861	PRESSURE RELEASE SENSOR BRACKET	27 - 2
C257 2867	FEELER BALANCER	27 - 43
C257 2869	FEELER ROLLER	27 - 24
C257 2886	SEPARATION PAD - A	29 - 21
C257 2895	SEPARATION PAD - B	29 - 31
C257 2899	MAGNETIC:SEPARATION PAD	29 - 30
C257 2927	CAM:PRESSURE RELEASE:ASS'Y	21 - 15
C257 2928	PLATE GUIDE - LONG	33 - 17
C257 2929	PLATE GUIDE - SHORT	33 - 3
C257 2940	MASTER SENSOR BRACKET	31 - 30
C257 2945	SHEET:PLATE:STAY:DOUBLE	31 - 4
C257 2946	BRACKET PLATE	31 - 2

Part No.	Description	Page and Index No.
C257 2958	PAPER GUIDE PLATE	31 - 1
C257 3002	CLAMP	35 - 21
C257 3096	PAPER FEED CONTROL SHIELDING PLATE	35 - 24
C257 3125	CAM SHAFT	39 - 24
C257 3220	ARM - FRONT	37 - 11
C257 3230	ARM - REAR	37 - 23
C257 3235	PAPER FEED CONTROL SENSOR ASS'Y	37 - 35
C257 3239	CUSHION	35 - 11
C257 3243	CLAMP	35 - 7
C257 3245	CLAMP SHAFT	35 - 8
C257 3249	TENSION SPRING	35 - 19
C257 3256	CLAMP ARM	35 - 14
C257 3260	COLLAR	35 - 23
C257 3264	CLAMP BASE	35 - 12
C257 3267	CLAMPCAM - LARGE	37 - 10
C257 3269	CLAMP CAM - SMALL	37 - 25
C257 3301	AIR KNIFE BASE	41 - 2
C257 3302	AIR KNIFE DUCT	41 - 1
C257 3304	AIR KNIFE DUCT SHEET- MIDDLE	41 - 26
C257 3305	AIR KNIFE DUCT SHEET - SIDE	41 - 25
C257 3331	PRESSURE SHAFT	37 - 34
C257 3336	PRESSURE DRIVE CAM GEAR	17 - 6
C257 3337	PRESSURE POSITIONING SENSOR SLITTER	17 - 5
C257 3338	GEAR	17 - 4
C257 3341	PRESSURE CAM	37 - 31
C257 3342	SLIDER PRESSURE PLATE	37 - 30
C257 3350	PRESSURE BRACKET	17 - 2
C257 3354	PRESSURE SENSOR BRACKET	17 - 14
C257 3355	ADJUSTING SCREW - FRONT	37 - 27
C257 3356	ADJUSTING SCREW - REAR	37 - 26
C257 3368	BRACKET BASE	37 - 29
C257 3370	CLEANER BRACKET	37 - 28
C257 3372	CLEANING BRACH	37 - 40

Part No.	Description	Page and Index No.
C257 3575	MASTER EJECT LOCK SOLENOID	11 - 13
C257 3575	MASTER EJECT LOCK SOLENOID	31 - 25
C257 3580	MASTER EJECT LOCK BRACKET	11 - 18
C257 3587	MASTER EJECT LOCK SUPPORTING PLATE	11 - 16
C257 3597	LOWER STAY	11 - 7
C257 3851	DRUM STAY	43 - 6
C257 3941	SUPPORTING PLATE	11 - 20
C257 3942	SCRAPER PICKOFF PAWL	11 - 26
C257 3952	SENSOR GUIDE PLATE	37 - 7
C257 3980	REAR BRACKET	11 - 19
C257 3983	FRONT BRACKET	11 - 21
C257 3987	TENSION SPRING	11 - 22
C257 4050	GUIDE SECTOR ASS'Y	21 - 2
C257 4101	PAPER EXIT UNIT DUCT	43 - 2
C257 5140	INK SENSOR PCB	47 - 15
C257 5146	LED PCB	13 - 22
C257 5622	MASTER EJECT DRIVE COVER	11 - 24
C257 5636	CONTROL UNIT COVER	87 - 7
C257 5637	CONTROL BOARD NO.1 GUIDE PLATE	87 - 11
C257 5638	CONTROL BOARD NO.2 GUIDE PLATE	87 - 8
C257 5639	COVER NO.1	87 - 3
C257 5739	MASTER1SENSOR BRACKET	31 - 7
C257 5807	PHOTO REFIECTION SENSOR:GP2A25	25 - 13
C257 5807	PHOTO REFIECTION SENSOR:GP2A25	33 - 16
C257 5807	PHOTO REFIECTION SENSOR:GP2A25	39 - 21
C257 5808	STEPPER MOTOR MM42*33	69 - 11
C257 5816	STEPPER MOTOR MM56*66	21 - 17
C257 5817	STEPPER MOTOR MM56*64	21 - 22
C257 5824	FAN DC24V 0.85A	41 - 5
C257 5826	AIR KNIFE DC MOTOR: 24V 5.3W	9 - 18
C257 5826	AIR KNIFE DC MOTOR: 24V 5.3W	71 - 18
C257 5856	PUSH SWITCH	13 - 14
C257 5860	PHOTOINTERRUPTOR	51 - 27

Part No.	Description	Page and Index No.
C257 5865	THERMISTOR:ASS'Y	53 - 22
C257 5870	DRUM LOCK SOLENOID	67 - 15
C257 5872	DC SOLENOID	37 - 18
C257 5874	TOTAL COUNTER MASTER	13 - 19
C257 5875	TOTAL COUNTER PAPER	13 - 18
C257 7051	WASHER:DIA4.5XDIA14X1T:T:T	15 - 21
C257 7055	WASHER:DIA8.1XDIA11.5X1T	27 - 18
C257 7055	WASHER:DIA8.1XDIA11.5X1T	39 - 50
C259 1351	CAUTION DECAL:MASTER SET	63 - 26
C259 1351	CAUTION DECAL:MASTER SET	89 - 8
C259 2036	DISCHARGE BRUSH:EXIT:REVERSE ROLLER	73 - 8
C259 2037	GUIDE:REVERSE ROLLER:LOWER	73 - 22
C259 2038	GUIDE:REVERSE ROLLER:UPPER	67 - 29
C259 2039	DISCHARGE BRUSH:REVERSE ROLLER:UPPER	67 - 28
C259 2042	GUIDE:ROLLER:TENSION	65 - 7
C259 2094	THERMAL HEAD SPRING	71 - 7
C259 2136	GUIDE:THERMAL HEAD:SHEET	63 - 18
C259 2225	LEFT TENSION GUIDE	69 - 37
C259 2595	STAY:SCREEN:ASS'Y	49 - 3
C259 3278	ADJUSTING STOPPER - FRONT	37 - 37
C259 3279	ADJUSTING STOPPER - REAR	37 - 36
C259 3302	AIR KNIFE SPRING PLATE	41 - 27
C259 3459	PRESSURE SPRING:2.8N	77 - 7
C259 3482	TENSION SPRING:POSITION:ROLLER:2.4N	77 - 17
C259 3485	SLIDE RAIL:UPPER:PEEN	77 - 12
C259 3495	PRESSURE PLATE BRACKET	79 - 29
C259 3625	GUIDE PLATE:UPPER:SHAFT:MASTER EJECTION	77 - 34
C259 3626	GUIDE PLATE:LOWER:SHAFT:MASTER EJECTION	77 - 39
C259 5301	DC POWER SUPPLY:MAIN:ASS'Y	83 - 8
C259 5800	BRUSHLESS MOTOR:DC24V:114W	15 - 8
C259 5803	DC MOTOR:5.0W:MM34	21 - 12
C259 5803	DC MOTOR:5.0W:MM34	69 - 22
C259 5803	DC MOTOR:5.0W:MM34	75 - 15

Part No.	Description	Page and Index No.
C259 5804	DC MOTOR:2.0W:MM32	39 - 18
C259 5804	DC MOTOR:2.0W:MM32	43 - 23
C259 5804	DC MOTOR:2.0W:MM32	53 - 3
C259 5805	STEPPER MOTOR:MM25:24V	45 - 12
C259 5806	DC MOTOR:7.2W:MM34	17 - 28
C259 5811	DC MOTOR:5.0W:MM34:PULLEY	75 - 27
C259 5820	DC MOTOR:2.0W:MM32:HEAVEN AND EARTH	51 - 11
C259 5821	STEPPER MOTOR:DIA42:PLOTTER:ASS'Y	17 - 18
C259 5823	DC MOTOR:2.0W:MM32:PULLEY	45 - 3
C259 5824	FAN:DC24V:0.5A	43 - 21
C259 5827	DC MOTOR:3.7W:DIA25.4	27 - 6
C259 5827	DC MOTOR:3.7W:DIA25.4	29 - 10
C259 7050	SCREW:M2.6X3	11 - 25
C259 7052	KNOB SCREW:M4X10	5 - 18
C262 1051	COVER:BASE:SAFETY	13 - 27
C262 1053	COVER:SAFETY:BASE	37 - 32
C262 1061	STAND:BASE	37 - 38
C262 1062	STOPPER:ADJUSTING SCREW	9 - 10
C262 1062	STOPPER:ADJUSTING SCREW	41 - 28
C262 1063	STAND:FRONT:DIA28	9 - 15
C262 1066	BASE:BRUSHLESS MOTOR	15 - 9
C262 1070	STOPPER:GRIP:ASS'Y	3 - 19
C262 1076	COVER:GRIP:REAR RIGHT	9 - 5
C262 1077	BRACKET:GUIDE:GRIP	9 - 4
C262 1077	BRACKET:GUIDE:GRIP	85 - 1
C262 1078	GRIP:MACHINE OR COPIER	9 - 3
C262 1080	SUPPORTING PLATE:GRIP:REAR RIGHT	23 - 45
C262 1170	COVER:DIAL:PRINTING	39 - 7
C262 1260	HINGE:DOOR:ASS'Y	3 - 6
C262 1286	CAP:PRESS DRAM:SMALL	5 - 1
C262 1292	DRUM STAY:EXIT:ASS'Y	41 - 12
C262 1299	INNER COVER	5 - 4
C262 1350	SHEET:OPERATION INSTRUCTIONS	3 - 7

Part No.	Description	Page and Index No.
C262 1356	DECAL:CAUTION CHART:HARNESS:SERVICE	63 - 23
C262 1356	DECAL:CAUTION CHART:HARNESS:SERVICE	89 - 9
C262 1357	SHEET:COUNTER	5 - 17
C262 1359	DECAL:CAUTION CHART:GEAR:SERVICE:EXP	83 - 12
C262 1359	DECAL:CAUTION CHART:GEAR:SERVICE:EXP	89 - 10
C262 1485	KEYTOP:CONTENUANCE	7 - 6
C262 1495	SHEET:PREVENTFENCE:LEFT	7 - 22
C262 1496	SHEET:PREVENTFENCE:RIGHT	7 - 25
C262 1497	LENS:LED:UPPER	7 - 24
C262 1499	NYLON CLAMP	7 - 20
C262 1520	BRACKET:LCDC	7 - 18
C262 1521	COVER:LCDC	7 - 21
C262 1523	BRACKET:MACHINE OR COPIER:FIX	7 - 27
C262 1964	BRACKET:DRIVE SUB-UNIT:PLOTTER:PEEN	69 - 30
C262 2028	SUPPORTING PLATE:DRIVE:PLOTTER	69 - 24
C262 2081	PLATENROLLER:MM18-12:45	65 - 16
C262 2095	TENSION SPRING:THERMAL HEAD	71 - 8
C262 2118	GUIDE PLATE:THERMAL HEAD:ASS'Y	71 - 2
C262 2120	SPACER:THERMAL HEAD	71 - 6
C262 2125	BRACKET:POSITIONING:THERMAL HEAD	71 - 5
C262 2149	SIDE PLATE:FRONT:UPPER BASE:PEEN	65 - 8
C262 2243	BASE:PLOTTER:ASS'Y	73 - 10
C262 2245	COVER:FLAT CABLE:PLOTTER	73 - 18
C262 2246	PLATE:FLAT CABLE:UPPER	73 - 20
C262 2247	PLATE:FLAT CABLE:LOWER	73 - 21
C262 2248	GUARD:CE-012:102MM	73 - 6
C262 2262	COVER:STAY:MACHINE:PLOTTER	31 - 9
C262 2263	COVER:FLAT CABLE:MACHINE OR COPIER	31 - 10
C262 2264	SCREW:PLOTTER:STOPPER:LOCK	31 - 26
C262 2265	BRACKET:SENSOR:CLAMP	31 - 11
C262 2270	GUARD:NJ-16:97MM	31 - 27
C262 2275	MAGNET CATCH:LOCK:PLOTTER	31 - 16
C262 2280	SLIDE RAIL:PLOTTER	9 - 20

Part No.	Description	Page and Index No.
C262 2317	OIL SUPPLY ROLLER:OIL SUPPLY ROLLER:ASS'Y	55 - 1
C262 2355	GRIP:LEVER:ASS'Y	47 - 43
C262 2364	INNER COVER:FRONT	47 - 39
C262 2367	LEVER:SWITCH:PEEN	47 - 4
C262 2420	FLANGE:OUTER:FRONT:S	49 - 1
C262 2422	FLANGE:OUTER:REAR	49 - 14
C262 2442	FIX STAND:DRUM:REAR:SUB-ASS'Y	49 - 16
C262 2450	SEPARATION PLATE:INK:FRONT:ASS'Y	55 - 18
C262 2452	SCREW:WASHER:M4X8	49 - 29
C262 2466	SEPARATION PLATE:INK:REAR:ASS'Y	55 - 20
C262 2472	BLADE:COLLECT:REAR	55 - 34
C262 2473	BLADE:COLLECT:FRONT	55 - 35
C262 2477	SEAL:FLANGE:REAR	49 - 31
C262 2478	BLADE:FRONT:DRUM:SAP	55 - 31
C262 2479	BLADE:REAR:DRUM:SAP	55 - 23
C262 2482	DRUM METAL SCREEN:DRUM:S:SUB-ASS'Y	49 - 8
C262 2484	SHIELD:DRUM METAL SCREEN:SUB-ASS'Y	49 - 32
C262 2498	COVER:INK CARTRIDGE	51 - 9
C262 2511	CAP:PUMP MOTOR	51 - 30
C262 2549	SCREW:LOCK:M2.5X5	55 - 36
C262 2551	SHIELDING PLATE:OIL SUPPLY ROLLER	55 - 7
C262 2575	SIDE PLATE:OIL SUPPLY ROLLER:INK: FRONT:ASS'Y	55 - 9
C262 2577	SIDE PLATE:OIL SUPPLY ROLLER:INK: REAR:ASS'Y	55 - 17
C262 2589	COVER:SENSOR:LEFT AND RIGHT:MOVE	51 - 15
C262 2590	CLAMP:ASS'Y	49 - 21
C262 2620	SPACER:CLAMP:DRUM	49 - 30
C262 2623	PLATE:BLADE:DRUM	55 - 33
C262 2657	DRAM METAL SCREEN:DRUM:DLT:S:SUB-ASS'Y	49 - 8
C262 2658	SEAL:DRAM METAL SCREEN:DLT:SUB-ASS'Y	49 - 32
C262 2926	GUIDE PLATE:FEED ROLLER:UPPER:ASS'Y	33 - 18
C262 3143	RACK:PRESSURE RELEASE ASS'Y	39 - 12

Part No.	Description	Page and Index No.
C262 3303	COVER:EXIT	41 - 4
C262 3408	CASE:MASTER EJECTION:ASS'Y	79 - 1
C262 3494	CASE:UPPER RIGHT	79 - 25
C262 3857	DRUM STAY:LEFT:EXIT	41 - 6
C262 3858	DRUM STAY:RIGHT:EXIT	41 - 14
C262 5180	THERMAL HEAD:A3:600	71 - 16
C262 5217	FLAT CABLE:CONNECTING:PLOTTER:ASS'Y	73 - 19
C262 5608	COVER:PCB:BRACKET	83 - 6
C262 5620	COVER:HINGE:PCB:LOWER	85 - 12
C262 5622	GASKET:STGZ2-10:L40	87 - 4
C262 5623	GASKET:STGZ1-5:L100	87 - 9
C262 5625	GASKET:STGZ7-7:L20	87 - 1
C262 5627	BRACKET:PRINTED CIRCUIT BOARD:LED	13 - 21
C262 5631	BRACKET:MAIN SWITCH	13 - 4
C262 5648	BRACKET:SAFETY SWITCH	13 - 5
C262 5730	BRACKET:LIFT MOTOR	25 - 30
C265 1028	SHAFT:DRIVE:PRESS DRAM:ASS'Y	19 - 20
C265 1043	SHAFT:STAY:LEFT:MIDDLE	39 - 19
C265 1063	HEXAGON SCREW - M5X4	15 - 16
C265 1101	SIDE PLATE:DRIVE:DRUM:ASS'Y	19 - 22
C265 1123	GUIDE PLATE:HEAVEN AND EARTH:FRONT:ASS'Y	19 - 24
C265 1143	TENSION SPRING:BELT TENSION	15 - 6
C265 1325	DECAL:OPERATION INSTRUCTIONS: MASTER EJECTION	79 - 33
C265 1325	DECAL:OPERATION INSTRUCTIONS: MASTER EJECTION	89 - 11
C265 2003	ROLLER:TENSION:PLOTTER:LOWER	67 - 30
C265 2066	COVER:FAN	71 - 19
C265 2315	SCREW:DRUM	55 - 12
C265 2351	SIDE PLATE:FRONT:ASS'Y	47 - 11
C265 2401	SIDE PLATE:REAR:LARGE:ASS'Y	47 - 45
C265 2450	SCREW:DIA4*M3*0.9	55 - 32
C265 2461	SIDE PLATE:FRONT:OIL SUPPLY ROLLER:2.5	55 - 24

Part No.	Description	Page and Index No.
C265 2462	SIDE PLATE:REAR:OIL SUPPLY ROLLER:ASS'Y	55 - 25
C265 2539	FRAME:DRUM:ASS'Y	53 - 27
C265 2547	BRACKET:HARNESS	53 - 26
C265 2549	PIN:BALL BEARING	53 - 9
C265 2550	PIN:BALL BEARING:LEFT LOWER	53 - 14
C265 2563	SPRING:OIL SUPPLY ROLLER:REAR	55 - 27
C265 2567	SHAFT:ARM:MOVE:OIL SUPPLY ROLLER	55 - 10
C265 2596	SPRING:CLAMP:OPEN AND CLOSE	49 - 19
C265 2616	BRACKET:PIN:DRUM:ASS'Y	13 - 12
C265 2646	GEAR:INK:Z16	55 - 22
C265 2823	SHAFT:TRANSMISSION:PAPER TRAY:FIX	25 - 20
C265 2828	TENSION SPRING:RISE:PAPER TRAY	23 - 2
C265 2837	GRIP RINGS:DIA6	27 - 39
C265 2858	COMPRESSION SPRING:SEPARATION	29 - 14
C265 2861	TENSION SPRING:PAPER FEED PRESSURE	27 - 20
C265 2862	FEELER:PAPER FEED ROLLER:SURFACE OF PAPER SENSOR:PEEN	27 - 23
C265 2867	COMPRESSION SPRING:TORQUE LIMITER:SEPARATION UNIT	29 - 26
C265 2901	TENSION SPRING:PRESSURE:FEED ROLLER:9.8N	33 - 7
C265 2906	FEED ROLLER:LOWER	33 - 22
C265 2922	BRACKET:GUIDE PLATE:FEED ROLLER:RIGHT	33 - 23
C265 2923	BRACKET:GUIDE PLATE:FEED ROLLER:LEFT	33 - 21
C265 2998	TENSION SPRING:BRACKET:STEPPER MOTOR:18N	21 - 25
C265 3001	PRESS DRAM UNIT:ASS'Y	35 - 6
C265 3150	BRACKET:EXCHANGE PLATE:ASS'Y	39 - 43
C265 3165	SHAFT:PRESSURE RELEASE	37 - 6
C265 3166	SPRING:PRESSURE RELEASE	37 - 9
C265 3251	SHAFT:PAWL:EXHAUST	35 - 17
C265 3270	ADJUSTING SCREW:M8:ASS'Y	37 - 5
C265 3449	TRANSPORT ROLLER:MASTER EJECTION:ASS'Y	77 - 35
C265 3451	TRANSPORT ROLLER:LOWER:ASS'Y	77 - 28
C265 3453	TRANSPORT ROLLER:UPPER:RUBBER	77 - 26

Part No.	Description	Page and Index No.
C265 3454	ROLLER:EXFLOLIATION UNIT:A3	77 - 27
C265 3455	GUIDE:UPPER REAR	77 - 23
C265 3458	GUIDE:UPPER:SENSOR	77 - 42
C265 3464	STAY:LOWER:SIDE PLATE:MOVEABLE	77 - 32
C265 3475	GUIDE:UPPER REAR:LEFT	77 - 43
C265 3476	GUIDE:UPPER REAR:RIGHT	77 - 44
C265 3508	TORSION SPRING:LOCK:PRESSURE PLATE:2.45N	79 - 23
C265 3541	COMPRESSION SPRING:JOINT:TRANSPORT	75 - 3
C265 3565	COMPRESSION SPRING:JOINT:PRESSURE:7N	75 - 13
C265 3566	SIDE PLATE:REAR:MASTER EJECTION:PEEN	75 - 21
C265 3585	COMPRESSION SPRING:3N	75 - 6
C265 3616	GUIDE:UPPER FRONT	77 - 24
C265 3623	GUIDE:MASTER EJECTION	77 - 38
C265 3975	SPRING:PAWL:MOVEABLE:EXIT	11 - 5
C265 4676	SPRING:COVER:ASSORTMENT	41 - 18
C265 4733	SPRING:PRESSURE:PICKUP:ASSORTMENT	45 - 20
C265 5120	KNOB SCREW:GROOVE TYPE	87 - 10
C265 5733	COVER:HARNESS:PAPER FEED SUB-UNIT	31 - 19
C265 5735	SHEET:GRIP:COVER	31 - 18
C265 5802	STEPPER MOTOR:MM50*40	69 - 1
C269 1013	TENSIONER:MASTER:ASS'Y	13 - 26
C269 1096	HEXAGONAL SET SCREW:M4X8	21 - 26
C269 1192	GUIDE PIN:INSERT:DRUM	19 - 19
C269 1366	DECAL:POSITIONING DISPLAY:PRESSURE PLATE	79 - 28
C269 1366	DECAL:POSITIONING DISPLAY:PRESSURE PLATE	89 - 12
C269 1367	DECAL:POSITIONING DISPLAY:CASE:MASTER EJECTION	79 - 30
C269 1367	DECAL:POSITIONING DISPLAY:CASE:MASTER EJECTION	89 - 13
C269 1498	LENS:LED:LOWER	7 - 23
C269 1978	DECAL:MASTER:MISFEED REMOVAL	63 - 1
C269 1978	DECAL:MASTER:MISFEED REMOVAL	89 - 14
C269 2009	REVERSE ROLLER:PLOTTER:LOWER	67 - 9

Part No.	Description	Page and Index No.
C269 2030	GRIP:OPEN AND CLOSE:PLOTTER:D1:PRINTING	65 - 13
C269 2031	GRIP:SUPPLY:PLOTTER:D2:PRINTING	65 - 4
C269 2032	GRIP:SUPPLY:PLOTTER:D3:PRINTING	63 - 7
C269 2100	BRACKET:OPTICS SENSOR:DUCT	71 - 13
C269 2140	ROLLER:PULL OUT:MASTER	65 - 17
C269 2201	SPRING PLATE:TENSION:FLANGE	63 - 8
C269 2240	BRACKET:SENSOR:LEADING EDGE	67 - 5
C269 2259	STAY:MAIN:PLOTTER:ADHESION	31 - 15
C269 2279	BRACKET:TENSION:PEEN	13 - 16
C269 2401	SIDE PLATE:REAR:LARGE:T	47 - 25
C269 2402	GUIDE:SIDE PLATE:REAR:DRUM	47 - 44
C269 2760	SCREW:M2X7	31 - 32
C269 2941	STAY:SENSOR:MASTER:1:ASS'Y	31 - 3
C269 3356	BRACKET:SHAFT:PAWL:MOVEABLE:EXIT	11 - 4
C269 3559	JOINT:PRESSURE SUB-UNIT:DRIVE:ASS'Y	75 - 14
C269 3564	BRACKET:SHAFT:TAKE OFF	75 - 11
C269 3566	BUSHING:MM8:PRESSURE:DRIVE	75 - 12
C269 5150	PRINTED CIRCUIT BOARD:MOTOR:DRIVE	15 - 1
C269 5168	PCB:OPERATION SUB-UNIT:RIGHT	7 - 13
C269 5618	HINGE:PCB:UPPER	83 - 3
C272 2098	DECAL:MASTER:POSITIONING DISPLAY	69 - 35
C272 2098	DECAL:MASTER:POSITIONING DISPLAY	89 - 15
C272 4384	SEPARATION PLATE:CASE:EXIT:FRONT	81 - 32
C279 1329	COVER:SCANNER:REAR	3 - 12
C279 1330	DECAL:FALL:PAPER FEED TRAY	3 - 2
C279 1330	DECAL:FALL:PAPER FEED TRAY	89 - 16
C279 2048	DECAL:OPEN AND CLOSE:PLOTTER:LEFT	65 - 1
C279 2048	DECAL:OPEN AND CLOSE:PLOTTER:LEFT	89 - 17
C279 2049	DECAL:OPEN AND CLOSE:PLOTTER:RIGHT	65 - 2
C279 2049	DECAL:OPEN AND CLOSE:PLOTTER:RIGHT	89 - 18
C279 4197	DECAL:OPERATION INSTRUCTIONS: PAPER EXIT UNIT	89 - 19
C279 4198	DECAL:GRIP:CASE	89 - 20

Part No.	Description	Page and Index No.
C279 4198	DECAL:GRIP:CASE	81 - 24
C279 4257	PLATE:EXIT:FRONT:ASS'Y	81 - 13
C279 4260	PLATE:EXIT:REAR:ASS'Y	81 - 35
C279 4360	SIDE FENCE:FRONT:PAPER EXIT SUB-UNIT	81 - 25
C279 4361	SIDE FENCE:FRONT UPPER	81 - 18
C279 4362	GUIDE PLATE:EXIT:FRONT UPPER	81 - 14
C279 4363	LINK:GUIDE:FRONT	81 - 16
C279 4364	SPRING PLATE:LINK:FRONT	81 - 17
C279 4365	SIDE FENCE:FRONT LOWER:PRINTING	81 - 31
C279 4367	CASE:SIDE FENCE	81 - 8
C279 4370	SIDE FENCE:REAR:PAPER EXIT SUB-UNIT	81 - 7
C279 4371	SIDE FENCE:REAR UPPER	81 - 26
C279 4372	GUIDE PLATE:EXIT:REAR UPPER	81 - 28
C279 4373	LINK:GUIDE:REAR	81 - 29
C279 4374	SPRING PLATE:LINK:REAR	81 - 30
C279 4375	SIDE FENCE:REAR LOWER:PRINTING	81 - 12
C279 4380	CASE:PLATE:SWIVEL:EXIT	81 - 2
C279 4381	PLATE:SWIVEL:EXIT	81 - 3
C279 4382	BALANCER:LEVER:SWIVEL	81 - 4
C279 4383	LINK:SWIVEL:EXIT	81 - 5
C279 4385	GRIP:END FENCE	81 - 6
C279 4387	GRIP:CASE:EXIT	81 - 1
C280 1069	BRACKET:OPTICS SENSOR:MASTER	9 - 16
C280 1071	DRUM:HOME POSITION SENSOR:ASS'Y	39 - 44
C280 1078	COVER:HARNESS	11 - 9
C280 1079	STAY:SCANNER:RIGHT:ASS'Y	9 - 9
C280 1107	BRACKET:SCANNER UNIT:LEFT	57 - 16
C280 1108	PLATE:EARTH	57 - 27
C280 1135	SPRING PLATE:OPERATION PANEL	5 - 8
C280 1250	COVER:DOOR:ASS'Y	3 - 17
C280 1255	COVER:DOOR	3 - 1
C280 1261	BRACKET:OPERATION PANEL:PROTECT:RIGHT	5 - 10
C280 1263	COVER:SCANNER:RIGHT	3 - 14

Part No.	Description	Page and Index No.
C280 1264	COVER:SCANNER:LEFT	3 - 11
C280 1265	COVER:PANEL:LOWER	5 - 5
C280 1266	COVER:RIGHT FRONT:ASS'Y	3 - 16
C280 1270	COVER:RIGHT REAR	3 - 15
C280 1273	SUPPORTING PLATE:SIDE PLATE:RIGHT UPPER	13 - 15
C280 1275	COVER:LEFT	3 - 10
C280 1277	CAP:COVER:LEFT	3 - 18
C280 1298	CAP:KNOB:PRESS DRAM:CLEANING	5 - 2
C280 1333	DECAL:MASTER SET INSTRUCTIONS	3 - 22
C280 1333	DECAL:MASTER SET INSTRUCTIONS	89 - 21
C280 1335	PANEL:LOGO:DD6650P	3 - 23
C280 1355	COVER:KEY COUNTER	5 - 12
C280 1365	COVER:MAIN SWITCH:PRINTING:ASS'Y	5 - 9
C280 1371	COVER:MAIN SWITCH	5 - 6
C280 1374	DECAL:MAIN SWITCH:EU	89 - 22
C280 1384	COVER:REAR	3 - 13
C280 1456	OPERATION PANEL:NA:ASS'Y	7 - *
C280 1457	OPERATION PANEL:EU:ASS'Y	7 - *
C280 1470	CASE:OPERATION PANEL	7 - 17
C280 1473	DESIGN PLATE:CLEAR:PANEL:MIDDLE:D2	7 - 2
C280 1480	KEYTOP:POWER SOURCE	7 - 7
C280 1481	KEYTOP:STOP	7 - 10
C280 1482	KEYTOP:START	7 - 9
C280 1483	KEYTOP:TRY PRINT	7 - 8
C280 1484	KEYTOP:10KEY	7 - 11
C280 1487	KEYTOP:PROGRAM	7 - 5
C280 1488	KEYTOP:CLEAR:EU	7 - 26
C280 1489	PIN:PANEL:EM-D2	7 - 4
C280 1490	KEYTOP:LEFT	7 - 15
C280 1491	DESIGN PLATE:CLEAR:PANEL:RIGHT:NA	7 - 3
C280 1491	KEYTOP:CLEAR:NA	7 - 26
C280 1492	DESIGN PLATE:CLEAR:PANEL:LEFT:NA	7 - 1
C280 1493	DESIGN PLATE:CLEAR:PANEL:RIGHT:EU	7 - 3

Part No.	Description	Page and Index No.
C280 1494	DESIGN PLATE:CLEAR:PANEL:LEFT:EU	7 - 1
C280 1800	COVER:OPERATION PANEL	57 - 19
C280 1811	BRACKET:COVER:REAR	57 - 20
C280 1815	PLATE:BASE:UPPER:WELDING	57 - 22
C280 1819	BRACKET:HARNESS:SCANNER	57 - 21
C280 1821	BRACKET:SCANNER:BASE	57 - 23
C280 1822	BRACKET:SCANNER:EARTH	83 - 13
C280 1827	ADJUSTING PIN:SCANNER UNIT:UPPER LOWER	57 - 26
C280 1828	SCREW:POLISHED ROUND:M3	57 - 25
C280 2132	COVER:PLOTTER	63 - 22
C280 2154	SIDE PLATE:REAR:UPPER BASE:PEEN	65 - 12
C280 2339	DRUM:ASS'Y	47 - 1
C280 2502	DRUM:PUMP:ASS'Y	51 - 31
C280 2512	PUMP UNIT	51 - 23
C280 2744	PAPER FEED UNIT:ASS'Y	23 - 1
C280 2767	PAPER TRAY:MOVEABLE:ASS'Y	23 - 46
C280 2775	PAPER TRAY:1000	23 - 18
C280 2777	PAPER TRAY:MOVEABLE:AUXILIARY	23 - 33
C280 2782	SHIELDING PLATE:PAPER TRAY:UPPER:FIX	5 - 13
C280 2784	COVER:PAPER TRAY:MOVEABLE	23 - 3
C280 2805	PAPER TRAY:FIX:ASS'Y	25 - 9
C280 2821	DRUM STAY:PAPER FEED:ASS'Y	29 - 1
C280 2935	BRACKET:OPTICS SENSOR:MASTER:ASS'Y	31 - 21
C280 2951	DECAL:SCALE:PAPER	23 - 17
C280 2951	DECAL:SCALE:PAPER	89 - 23
C280 3008	SEPARATION UNIT:EXIT:ASS'Y	41 - 19
C280 3406	TRANSPORT UNIT:MASTER EJECTION:ASS'Y	77 - 1
C280 3570	STAY:UPPER:MAIN:WELDING	11 - 10
C280 4000	CLAMP:OPEN AND CLOSE:MASTER FEED:ASS'Y	21 - 24
C280 4005	HALE UNIT:ASS'Y	43 - 1
C280 4660	ASSORTMENT:MACHINE OR COPIER:ASS'Y	45 - 1
C280 5102	PCB:MPU:EMERALD-D2:FROM:ASS'Y	83 - 1
C280 5115	PRINTED CIRCUIT BOARD:I/O CONTROL:SUB-ASS'Y	83 - 10

Part No.	Description	Page and Index No.
C280 5153	PRINTED CIRCUIT BOARD:SEPARATION CHANGE:ASS'Y	29 - 9
C280 5155	PRINTED CIRCUIT BOARD:PAPER SIZE SENSOR:ASS'Y	23 - 8
C280 5157	PRINTED CIRCUIT BOARD:PAPER FEED PRESSURE:ASS'Y	27 - 11
C280 5164	PCB:LCDC:NA:ASS'Y	7 - 19
C280 5166	PCB:LCDC:EU:ASS'Y	7 - 19
C280 5169	PCB:OPERATION SUB-UNIT:LEFT	7 - 16
C280 5190	PCB:ACU:FROM:ASS'Y	87 - 6
C280 5202	HARNESS:DC FAN MOTOR:CONNECTING:ASS'Y	9 - 19
C280 5206	HARNESS:PAPER FEED PRESSURE:ASS'Y	27 - 19
C280 5208	HARNESS:DRUM:CONNECTING:ASS'Y	31 - 5
C280 5213	HARNESS:MAIN SWITCH:ASS'Y	13 - 3
C280 5214	HARNESS:DRUM:ASS'Y	53 - 28
C280 5215	HARNESS:DRUM:ID:ASS'Y	53 - 15
C280 5222	HARNESS:HALE:ASS'Y	43 - 16
C280 5224	HARNESS:DRUM:HP:ASS'Y	39 - 32
C280 5226	HARNESS:REGISTRATION:ENCODER:0ANG:ASS'Y	37 - 20
C280 5228	HARNESS:CONNECTING:MASTER EJECTION UNIT:ASS'Y	75 - 7
C280 5229	HARNESS:DRUM:ID:CONNECTING:ASS'Y	47 - 41
C280 5230	HARNESS:PRESSURE SUB-UNIT: CONNECTING:ASS'Y	17 - 10
C280 5233	HARNESS:MOTOR:RISE:CONNECTING:ASS'Y	25 - 32
C280 5234	HARNESS:AIR KNIFE:ASS'Y	41 - 3
C280 5236	HARNESS:PAPER:SIZE:ASS'Y	23 - 28
C280 5236	HARNESS:PAPER:SIZE:ASS'Y	25 - 34
C280 5238	HARNESS:SEPARATION:ASS'Y	29 - 8
C280 5241	HARNESS:REGISTRATION ROLLER:PRESSURE RELEASE:ASS'Y	27 - 5
C280 5243	HARNESS:MASTER EJECTION:LOCK:CONNECTING:ASS'Y	11 - 11

Part No.	Description	Page and Index No.
C280 5245	HARNESS:MASTER EJECTION::ASS'Y	77 - 20
C280 5246	HARNESS:DRUM:CONNECTING:MAIN:ASS'Y	39 - 31
C280 5247	HARNESS:DOUBLE FEED SENSOR: CONNECTING:ASS'Y	85 - 8
C280 5248	HARNESS:PLOTTER:ASS'Y	73 - 7
C280 5256	HARNESS:OIL SUPPLY ROLLER:MOTOR:ASS'Y	53 - 1
C280 5262	HARNESS:CHANGE:ASS'Y	39 - 23
C280 5264	HARNESS:REGISTRATION:ASS'Y	33 - 15
C280 5269	HARNESS:ASSORTMENT:SENSOR:ASS'Y	45 - 2
C280 5270	HARNESS:ASSORTMENT:ASS'Y	45 - 23
C280 5283	HARNESS:CONNECTING:PLOTTER:ASS'Y	31 - 12
C280 5284	HARNESS:DC DRIVE:ASS'Y	13 - 25
C280 5284	HARNESS:DC DRIVE:ASS'Y	83 - 9
C280 5285	HARNESS:PUMP UNIT:DRUM:ASS'Y	51 - 29
C280 5286	HARNESS:CONNECTING:MAIN:FRONT:ASS'Y	13 - 28
C280 5615	SHADING PLATE:POWER SUPPLY CORD	85 - 9
C280 5616	BRACKET:PCB:ASS'Y	83 - 4
C280 5617	SHADING PLATE:OUTLET	85 - 10
C280 5621	HINGE:PCB:LOWER	85 - 5
C280 5624	BRACKET:KEY COUNTER:ADF	85 - 2
C280 5625	BRACKET:INTERFACE	85 - 6
C280 5628	BRACKET:BASE:FIX	17 - 15
C280 5630	CONTROL UNIT:WELDING	87 - 2
C280 5632	BRACKET:BASE:AUXILIARY	17 - 29
C280 5679	BASE:HDD	83 - 7
C280 5680	BRACKET:HARNESS:MAIN	83 - 11
C280 5841	INLET:ASS'Y	85 - 4
C280 5850	OPTICS SENSOR:MASTER:DRUM:1	31 - 8
C280 5851	OPTICS SENSOR:MASTER	9 - 14
C280 5851	OPTICS SENSOR:MASTER	33 - 5
C280 5851	OPTICS SENSOR:MASTER	77 - 30
C280 5852	OPTICS SENSOR:MASTER:DRUM:2	31 - 28
C280 5854	OPTICS SENSOR:MASTER:DUCT	65 - 10

Part No.	Description	Page and Index No.
C280 5855	OPTICS SENSOR:MASTER:SET SENSOR	67 - 6
C280 5857	OPTICS SENSOR:DOUBLE FEED SENSOR:PHOTO	33 - 26
C403 1899	RUBBER BUSHING - M4	21 - 19
C593 4104	TRANSPORT BELT ROLLER	43 - 26
C593 4105	CENTER ROLLER - DELIVERY TABLE	43 - 4
C593 4106	FRONT VACUUM PLATE	43 - 5
C593 4107	REAR VACUUM PLATE	43 - 7
C593 4108	WING POSITION SENSOR BRACKET	43 - 20
C593 4112	GROUNDING PLATE	43 - 15
C593 4113	GROUNDING PLATE	43 - 28
C611 5512	DOUBLE FEED SENSOR BOARD	85 - 7
C611 5680	DOUBLE FEED SENSOR BRACKET	85 - 13
C612 1803	SCREW:ENCODER:A4991378B	13 - 7
C628 4368	UPPER - SIDE FENCE PIN	81 - 9
C628 4391	SIDE FENCE GUIDE - FRONT	81 - 20
C628 4394	SIDE FENCE GUIDE - REAR	81 - 33
C628 4413	DELIVERY TABLE SPRING	81 - 10
C628 4414	PIN - LOWER SIDE FENCE	81 - 11
C628 4440	FRONT TABLE HINGE	81 - 23
C628 4448	KNOB SCREW:FIX:EXIT	81 - 22
C628 4450	REAR TABLE HINGE	81 - 21
C630 2496	SHIELD:DRAM METAL SCREEN:A4:SUB-ASS'Y	49 - 32
C630 2497	DRUM METAL SCREEN:DRUM:A4:SUB-ASS'Y	49 - 8
C639 4103	SHAFT:DRIVEN:HALE UNIT	43 - 27
C639 4109	SHAFT:ADJUSTING PLATE:HALE:ASS'Y	43 - 9
C639 4115	SHAFT:DRIVE:HALE UNIT:ASS'Y	43 - 12
D025 1727	MIRROR:NO.2:CONCAVE:ASS'Y	59 - 4
D025 1728	MIRROR:NO.2:CONVAX:ASS'Y	59 - 2
D029 1715	CARRIAGE:NO.1:ASS'Y	59 - 8
D029 1719	SHEET:CARRIAGE:NO.1	59 - 21
D029 1745	PULLEY:DRIVE WERE:FRONT	61 - 20
D029 1748	PULLEY:DRIVE WERE:REAR:ASS'Y	61 - 16
D029 1749	PULLEY:PROTECTION	61 - 17

Part No.	Description	Page and Index No.
D039 1095	GROUND PLATE:SCANNER:STAY:UPPER REAR	57 - 24
D039 1700	INNER COVER:SCANNER:PEEN	59 - 17
D039 1705	GROUND PLATE:HARNESS:SBU	59 - 15
D039 1712	BRACKET:TENSION:FRONT	61 - 25
D039 1713	BRACKET:TENSION:REAR	61 - 24
D039 1715	DRIVE WERE	61 - 15
D039 1717	SHAFT:SCANNER:DRIVE	61 - 21
D039 1718	PULLEY:IDLER:LEFT FRONT:PEEN	61 - 6
D039 1720	PULLEY:IDLER:LEFT REAR:PEEN	61 - 7
D039 1724	BRACKET:STEPPER MOTOR:DRIVE	61 - 23
D039 1733	XENON LAMP:DIA10:ASS'Y	59 - 11
D039 1742	CARRIAGE:NO.2:SUB-ASS'Y	59 - 1
D039 1747	GUIDE:HIGH VOLTAGE SUPPLY CORD	59 - 6
D039 1748	GUIDE:HIGH VOLTAGE SUPPLY CORD:RAIL	59 - 22
D039 1751	HOLDER:EXPOSURE GLASS	57 - 12
D039 1764	BRACKET:ORIGINAL SENSOR:SUB SCANNING	61 - 22
D039 1769	FRAME:REAR	57 - 17
D039 1770	GROUND PLATE:SENSOR:AKS	57 - 8
D039 1792	BRACKET:CONNECTOR:DOCUMENT FEEDER	57 - 15
D039 1801	LENS:HOLDER:ASS'Y	61 - 10
D039 5201	HARNESS:SCANNER:STM	61 - 1
D039 5203	HARNESS:SCANNER:FRAME	57 - 9
D039 5203	HARNESS:SCANNER:FRAME	61 - 12
D039 5205	INTERFACE CABLE:SCANNER:LVDS:PEEN	61 - 9
D039 5206	HARNESS:SCANNER:BASE:H	61 - 26
D039 5401	STABILIZER	61 - 11
D105 1703	GASKET:9X5.5X17	59 - 18
D105 1795	EXPOSURE GLASS:DOCUMENT FEEDER	57 - 2
D120 1551	SHEET:LOGO:NA	7 - 28
D142 1750	SCALE:INNER BACK:PRINTING	57 - 10
D142 1785	SCALE:LEFT:B:DOM/EU:ASS'Y	57 - 5
D142 1786	SCALE:LEFT:B:NA:ASS'Y	57 - 5
D142 1801	SCALE:LEFT:A	57 - 1

Part No.	Description	Page and Index No.
D144 1396	HOLDER:EXPOSURE GLASS:IG:ASS'Y	3 - 20
G011 3305	GEAR - 16Z	23 - 22
G024 1234	SPACER - 12.2X18X0.25	25 - 33
G056 6005	HDD COVER	87 - 5
G404 2810	SPRING PLATE - 2ND MIRROR	59 - 3
G570 1133	TIMING PULLEY 73	61 - 14
G570 1225	SENSOR SHIELDING PLATE	57 - 7
G570 2730	SLIDER - SCANNER	59 - 10
G570 2833	PULLEY HOLDER	59 - 20
G570 2834	PULLEY - HIGH VOLTAGE SUPPLY CORD	59 - 7
H012 1181	BUSHING- 6MM	65 - 19
H012 1181	BUSHING- 6MM	67 - 25
H012 1181	BUSHING- 6MM	69 - 33
H012 1181	BUSHING- 6MM	71 - 23
H041 1583	WASHER - M5.4*0.1	79 - 32
H041 2137	WASHER - M6.2X16	27 - 40
H310 6173	TOUCH PANEL:HVGA:FU-ACF	7 - 14
H519 4357	GEAR:IDLER:26Z	27 - 13
H522 1100	SENSOR GUIDE	17 - 12
H522 1100	SENSOR GUIDE	21 - 23
H522 1100	SENSOR GUIDE	25 - 35
H522 1100	SENSOR GUIDE	27 - 38
H522 1100	SENSOR GUIDE	29 - 3
H522 1100	SENSOR GUIDE	39 - 46
H522 1100	SENSOR GUIDE	43 - 10
H522 1100	SENSOR GUIDE	45 - 18
H522 1100	SENSOR GUIDE	51 - 24
H522 1100	SENSOR GUIDE	53 - 23
H522 1100	SENSOR GUIDE	69 - 6
H522 1100	SENSOR GUIDE	75 - 28
M026 1815	CLAMP:MIRROR:NO.1	59 - 13

Part No.	Description	Page and Index No.
AA06 0979	TENSION SPRING:TENSION:14720MN	61 - 18
AA06 0980	TENSION SPRING:TENSION:11300MN	61 - 19
AA08 2144	BUSHING - 8X12X7	61 - 13
AA13 2080	SPACER - CLEANING BRUSH	47 - 5
AA13 2115	COLLAR - CAM FOLLOWER	35 - 16
AA14 3562	SCREW:M4:DIA6X1.2	37 - 15
AA14 3569	SCREW	31 - 13
AA14 3569	SCREW	75 - 8
AA14 3592	SCREW- M4X6	85 - 3
AA14 3718	STEPPED SCREW - M4	39 - 14
AA14 3791	SCREW:SAFETY	27 - 10
AA14 3791	SCREW:SAFETY	29 - 32
AA14 3813	HEXAGON HEAD BOLT WITH WASHER -M4X6	33 - 2
AA14 3834	SCREW:M4	25 - 16
AA14 3861	SCREW - DIA5	23 - 41
AA14 3861	SCREW - DIA5	27 - 41
AA14 3863	SHOULDER SCREW - M3	11 - 23
AC03 0169	MIRROR:NO.1	59 - 12
AG07 0504	MAGNET CATCH:44.1N	23 - 4
AG07 0504	MAGNET CATCH:44.1N	47 - 12
AG07 0504	MAGNET CATCH:44.1N	53 - 6
AG07 1009	ROTARY CATCH	13 - 1
AG07 1012	MAGNET CATCH:ASS'Y	13 - 6
AH01 0008	STAND:MM24	37 - 39
AW01 0109	PHOTO REFIECTION SENSOR:PS117ED1	43 - 14
AW01 0112	PHOTO REFLECTION SENSOR:ORIGINAL TABLE	23 - 24
AW01 0134	ORIGINAL SENSOR - 48MM	61 - 8
AW02 0141	PHOTOINTERRUPTOR	21 - 9
AW02 0141	PHOTOINTERRUPTOR	27 - 4
AW02 0141	PHOTOINTERRUPTOR	29 - 7
AW02 0141	PHOTOINTERRUPTOR	69 - 34
AW02 0146	PHOTOINTERRUPTOR:FLAT:PICH2MM:M4	57 - 6
AW02 0203	PHOTOINTERRUPTOR:GP1A173LCS2F	17 - 11

Part No.	Description	Page and Index No.
AW02 0203	PHOTOINTERRUPTOR:GP1A173LCS2F	25 - 26
AW02 0203	PHOTOINTERRUPTOR:GP1A173LCS2F	27 - 44
AW02 0203	PHOTOINTERRUPTOR:GP1A173LCS2F	39 - 17
AW02 0203	PHOTOINTERRUPTOR:GP1A173LCS2F	43 - 18
AW02 0203	PHOTOINTERRUPTOR:GP1A173LCS2F	45 - 6
AW02 0203	PHOTOINTERRUPTOR:GP1A173LCS2F	51 - 22
AW02 0203	PHOTOINTERRUPTOR:GP1A173LCS2F	53 - 13
AW02 0203	PHOTOINTERRUPTOR:GP1A173LCS2F	69 - 3
AW02 0203	PHOTOINTERRUPTOR:GP1A173LCS2F	75 - 9
AW02 0204	PHOTOINTERRUPTOR:LGRC102	57 - 4
AW50 0012	PUSH SWITCH	31 - 17
AW50 0012	PUSH SWITCH	53 - 5
AW50 0012	PUSH SWITCH	75 - 22
GX06 5814	DC MOTOR:PAPER FEED TRAY:24V	25 - 11

Part No.	Description	Page and Index No.
0241 6060N	PAN HEAD SCREW M1.6X6	11 - 102
0241 6060N	PAN HEAD SCREW M1.6X6	31 - 110
0241 6060N	PAN HEAD SCREW M1.6X6	45 - 110
0314 0080Z	PHILIPS SCREW - 4X8	49 - 108
0314 0120N	SCREW - M4X12	57 - 102
0314 0160N	PAN HEAD SCREW:M4X16	19 - 103
0323 0060N	SCREW M3X6	47 - 114
0323 0060N	SCREW M3X6	55 - 101
0323 0060N	SCREW M3X6	73 - 103
0323 0100N	SCREW M3X10	5 - 101
0352 0080N	SCREW:M2X8	9 - 114
0352 0080N	SCREW:M2X8	31 - 109
0352 0080N	SCREW:M2X8	33 - 107
0352 0080N	SCREW:M2X8	65 - 107
0352 0080N	SCREW:M2X8	67 - 108
0352 0080N	SCREW:M2X8	77 - 106
0352 5050N	SCREW M2.5X5	45 - 107
0353 0040N	SCREW - M3X4	5 - 106
0353 0040N	SCREW - M3X4	9 - 113
0353 0040N	SCREW - M3X4	17 - 108
0353 0040N	SCREW - M3X4	21 - 104
0353 0040N	SCREW - M3X4	25 - 104
0353 0040N	SCREW - M3X4	25 - 107
0353 0040N	SCREW - M3X4	27 - 105
0353 0040N	SCREW - M3X4	29 - 101
0353 0040N	SCREW - M3X4	31 - 108
0353 0040N	SCREW - M3X4	33 - 116
0353 0040N	SCREW - M3X4	37 - 109
0353 0040N	SCREW - M3X4	39 - 106
0353 0040N	SCREW - M3X4	41 - 107
0353 0040N	SCREW - M3X4	43 - 110
0353 0040N	SCREW - M3X4	45 - 105
0353 0040N	SCREW - M3X4	51 - 103

Part No.	Description	Page and Index No.
0353 0040N	SCREW - M3X4	51 - 106
0353 0040N	SCREW - M3X4	53 - 101
0353 0040N	SCREW - M3X4	55 - 102
0353 0040N	SCREW - M3X4	63 - 108
0353 0040N	SCREW - M3X4	65 - 102
0353 0040N	SCREW - M3X4	67 - 105
0353 0040N	SCREW - M3X4	69 - 107
0353 0040N	SCREW - M3X4	71 - 102
0353 0040N	SCREW - M3X4	73 - 104
0353 0040N	SCREW - M3X4	75 - 105
0353 0040N	SCREW - M3X4	77 - 107
0353 0040N	SCREW - M3X4	81 - 101
0353 0050N	SCREW-M3X5	59 - 101
0353 0060N	BIND SCREW - M3X6	11 - 112
0353 0060N	BIND SCREW - M3X6	13 - 103
0353 0060N	BIND SCREW - M3X6	17 - 105
0353 0060N	BIND SCREW - M3X6	23 - 103
0353 0060N	BIND SCREW - M3X6	25 - 105
0353 0060N	BIND SCREW - M3X6	33 - 112
0353 0060N	BIND SCREW - M3X6	35 - 103
0353 0060N	BIND SCREW - M3X6	37 - 103
0353 0060N	BIND SCREW - M3X6	39 - 109
0353 0060N	BIND SCREW - M3X6	41 - 108
0353 0060N	BIND SCREW - M3X6	47 - 109
0353 0060N	BIND SCREW - M3X6	57 - 101
0353 0060N	BIND SCREW - M3X6	63 - 106
0353 0060N	BIND SCREW - M3X6	67 - 106
0353 0060N	BIND SCREW - M3X6	69 - 106
0353 0060N	BIND SCREW - M3X6	87 - 101
0353 0080N	SCREW:M3X8	73 - 105
0353 0080N	SCREW:M3X8	77 - 105
0353 0080N	SCREW:M3X8	81 - 102
0353 0120N	SCREW M3X12	15 - 106

Part No.	Description	Page and Index No.
0353 0120N	SCREW M3X12	23 - 106
0353 0120N	SCREW M3X12	43 - 106
0353 0120N	SCREW M3X12	49 - 105
0353 0350N	SCREW M3X35	9 - 111
0353 0350N	SCREW M3X35	13 - 106
0353 0350N	SCREW M3X35	71 - 103
0354 0040N	SCREW-M4X4	11 - 113
0354 0040N	SCREW-M4X4	23 - 109
0354 0040N	SCREW-M4X4	49 - 103
0354 0050N	SCREW - M4X5	25 - 101
0354 0060N	SCREW-M4X6	13 - 110
0354 0060N	SCREW-M4X6	33 - 109
0354 0060N	SCREW-M4X6	37 - 111
0354 0060N	SCREW-M4X6	39 - 105
0354 0060N	SCREW-M4X6	63 - 109
0354 0060N	SCREW-M4X6	73 - 101
0354 0080N	SCREW:M4X8	27 - 111
0354 0080N	SCREW:M4X8	35 - 102
0354 0080N	SCREW:M4X8	55 - 105
0354 0100N	SCREW - M4X10	51 - 101
0354 0100N	SCREW - M4X10	81 - 104
0354 0140N	SCREW M4X14	21 - 110
0354 0140N	SCREW M4X14	35 - 105
0354 0140N	SCREW M4X14	63 - 102
0354 0350N	SCREW M4X35	41 - 104
0360 3006N	SCREW - M3X6	57 - 103
0360 3006N	SCREW - M3X6	61 - 101
0360 3006P	SCREW - M3X6	61 - 105
0450 3006N	TAPPING SCREW - M3X6	45 - 111
0450 3008N	TAPPING SCREW - M3X8	5 - 102
0450 3008N	TAPPING SCREW - M3X8	51 - 102
0450 3008N	TAPPING SCREW - M3X8	65 - 103
0450 3008N	TAPPING SCREW - M3X8	79 - 103

Part No.	Description	Page and Index No.
0450 3010N	TAPPING SCREW - M3X10	3 - 102
0450 3010N	TAPPING SCREW - M3X10	23 - 107
0450 3010N	SCREW:M2X8	81 - 106
0450 4006N	TAPPING SCREW:4X6	27 - 104
0450 4008N	TAPPING SCREW - M4X8	3 - 101
0450 4008N	TAPPING SCREW - M4X8	21 - 108
0450 4008N	TAPPING SCREW - M4X8	25 - 109
0450 4008N	TAPPING SCREW - M4X8	37 - 105
0450 4008N	TAPPING SCREW - M4X8	43 - 101
0450 4008N	TAPPING SCREW - M4X8	53 - 105
0450 4025N	TAPPING SCREW:4X25	25 - 110
0451 3006N	TAPPING SCREW - 3X6	7 - 101
0451 3006N	TAPPING SCREW - 3X6	11 - 101
0451 3006N	TAPPING SCREW - 3X6	13 - 105
0451 3006N	TAPPING SCREW - 3X6	21 - 102
0451 3006N	TAPPING SCREW - 3X6	29 - 103
0451 3006N	TAPPING SCREW - 3X6	31 - 101
0451 3006N	TAPPING SCREW - 3X6	33 - 103
0451 3006N	TAPPING SCREW - 3X6	41 - 105
0451 3006N	TAPPING SCREW - 3X6	45 - 101
0451 3006N	TAPPING SCREW - 3X6	57 - 104
0451 3006N	TAPPING SCREW - 3X6	63 - 107
0451 3006N	TAPPING SCREW - 3X6	67 - 107
0451 3006N	TAPPING SCREW - 3X6	69 - 104
0451 3006N	TAPPING SCREW - 3X6	71 - 105
0451 3006N	TAPPING SCREW - 3X6	73 - 102
0451 3006N	TAPPING SCREW - 3X6	75 - 103
0451 3006N	TAPPING SCREW - 3X6	79 - 104
0451 3006N	TAPPING SCREW - 3X6	83 - 101
0451 3006N	TAPPING SCREW - 3X6	85 - 105
0451 3006N	TAPPING SCREW - 3X6	87 - 102
0451 3008N	TAPPING SCREW - M3X8	3 - 107
0451 3008N	TAPPING SCREW - M3X8	5 - 108

Part No.	Description	Page and Index No.
0451 3008N	TAPPING SCREW - M3X8	37 - 110
0451 3008N	TAPPING SCREW - M3X8	45 - 113
0451 3008N	TAPPING SCREW - M3X8	57 - 107
0451 4006N	TAPPING SCREW - 4X6	3 - 108
0451 4006N	TAPPING SCREW - 4X6	9 - 103
0451 4006N	TAPPING SCREW - 4X6	11 - 103
0451 4006N	TAPPING SCREW - 4X6	13 - 104
0451 4006N	TAPPING SCREW - 4X6	15 - 109
0451 4006N	TAPPING SCREW - 4X6	17 - 106
0451 4006N	TAPPING SCREW - 4X6	19 - 109
0451 4006N	TAPPING SCREW - 4X6	21 - 105
0451 4006N	TAPPING SCREW - 4X6	23 - 101
0451 4006N	TAPPING SCREW - 4X6	25 - 102
0451 4006N	TAPPING SCREW - 4X6	27 - 101
0451 4006N	TAPPING SCREW - 4X6	29 - 109
0451 4006N	TAPPING SCREW - 4X6	31 - 102
0451 4006N	TAPPING SCREW - 4X6	33 - 105
0451 4006N	TAPPING SCREW - 4X6	37 - 101
0451 4006N	TAPPING SCREW - 4X6	39 - 101
0451 4006N	TAPPING SCREW - 4X6	41 - 103
0451 4006N	TAPPING SCREW - 4X6	43 - 111
0451 4006N	TAPPING SCREW - 4X6	45 - 104
0451 4006N	TAPPING SCREW - 4X6	57 - 109
0451 4006N	TAPPING SCREW - 4X6	63 - 101
0451 4006N	TAPPING SCREW - 4X6	75 - 106
0451 4006N	TAPPING SCREW - 4X6	77 - 104
0451 4006N	TAPPING SCREW - 4X6	83 - 114
0451 4006N	TAPPING SCREW - 4X6	85 - 102
0451 4008N	TAPPING SCREW:4X8	3 - 103
0451 4008N	TAPPING SCREW:4X8	3 - 105
0451 4008N	TAPPING SCREW:4X8	5 - 103
0451 4008N	TAPPING SCREW:4X8	11 - 111
0451 4008N	TAPPING SCREW:4X8	13 - 108

Part No.	Description	Page and Index No.
0451 4008N	TAPPING SCREW:4X8	15 - 107
0451 4008N	TAPPING SCREW:4X8	19 - 108
0451 4008N	TAPPING SCREW:4X8	23 - 104
0451 4008N	TAPPING SCREW:4X8	27 - 112
0451 4008N	TAPPING SCREW:4X8	35 - 111
0451 4008N	TAPPING SCREW:4X8	37 - 114
0451 4008N	TAPPING SCREW:4X8	39 - 114
0451 4008N	TAPPING SCREW:4X8	43 - 112
0451 4008N	TAPPING SCREW:4X8	69 - 105
0451 4008N	TAPPING SCREW:4X8	79 - 101
0451 4010N	TAPPING SCREW:4X10	3 - 106
0451 4010N	TAPPING SCREW:4X10	9 - 101
0451 4010N	TAPPING SCREW:4X10	37 - 107
0452 3006N	BINDING SELF-TAPPING SCREW:3X6	43 - 105
0452 3008N	TAPPING SCREW - M3X8	23 - 102
0452 3008N	TAPPING SCREW - M3X8	81 - 103
0452 3010N	BINDING SELF-TAPPING SCREW:3X10	23 - 108
0453 3006N	TAPPING SCREW - M3X6	3 - 104
0453 3014N	BINDING SELF TAPPING SCREW 3X14	67 - 104
0453 4006N	BINDING SELF TAPPING SCREW:4X6	5 - 107
0453 4006N	BINDING SELF TAPPING SCREW:4X6	9 - 102
0453 4006N	BINDING SELF TAPPING SCREW:4X6	23 - 110
0453 4006N	BINDING SELF TAPPING SCREW:4X6	39 - 111
0453 4006N	BINDING SELF TAPPING SCREW:4X6	41 - 102
0453 4006N	BINDING SELF TAPPING SCREW:4X6	81 - 105
0454 3006Q	TAPPING SCREW - M3X6	9 - 104
0454 3006Q	TAPPING SCREW - M3X6	45 - 109
0454 3006Q	TAPPING SCREW - M3X6	57 - 106
0454 3006Q	TAPPING SCREW - M3X6	59 - 103
0454 3006Q	TAPPING SCREW - M3X6	61 - 106
0454 3006Q	TAPPING SCREW - M3X6	63 - 103
0454 3006Q	TAPPING SCREW - M3X6	77 - 102
0454 3006Q	TAPPING SCREW - M3X6	83 - 111

Part No.	Description	Page and Index No.
0454 3006Q	TAPPING SCREW - M3X6	87 - 104
0454 4006Q	TAPPING SCREW:4X6	9 - 112
0454 4006Q	TAPPING SCREW:4X6	15 - 101
0454 4006Q	TAPPING SCREW:4X6	17 - 113
0454 4006Q	TAPPING SCREW:4X6	31 - 103
0454 4006Q	TAPPING SCREW:4X6	37 - 116
0454 4006Q	TAPPING SCREW:4X6	39 - 115
0454 4006Q	TAPPING SCREW:4X6	85 - 106
0573 0030E	HEXAGON HEADLESS SET SCREW - M3X3	33 - 114
0573 0030E	HEXAGON HEADLESS SET SCREW - M3X3	71 - 101
0573 0040E	HEXAGON HEADLESS SET SCREW - M3X4	17 - 104
0574 0040E	HEXAGON HEADLESS SET SCREW - M4X4	39 - 112
0574 0040E	HEXAGON HEADLESS SET SCREW - M4X4	49 - 109
0574 0040E	HEXAGON HEADLESS SET SCREW - M4X4	55 - 103
0574 0040E	HEXAGON HEADLESS SET SCREW - M4X4	65 - 106
0574 0040E	HEXAGON HEADLESS SET SCREW - M4X4	69 - 101
0574 0050E	HEXAGON HEADLESS SET SCREW - M4X5	39 - 104
0574 0060E	HEXAGON HEADLESS SET SCREW - M4X6	33 - 111
0575 0050E	HEXAGON HEADLESS SET SCREW - M5X5	19 - 105
0586 0451N	HEXAGONAL HEAD BOLT M6X45	37 - 115
0594 0100E	SOCKET BOLT - M4X10	49 - 110
0594 0120E	HEXAGON BOLT - M4X12	19 - 102
0595 0080E	HEXAGON BOLT - M5X8	19 - 101
0623 0140E	SPRING PIN - 3X14MM	37 - 108
0623 0140E	SPRING PIN - 3X14MM	43 - 107
0623 0140E	SPRING PIN - 3X14MM	67 - 111
0623 0320E	SPRING PIN 3X32	33 - 115
0624 0200E	SPRING PIN - 4X20MM	35 - 110
0633 0140G	PARALLEL PIN - 3X14	27 - 102
0701 0030N	WASHER DIA3	69 - 108
0701 0030N	WASHER DIA3	83 - 103
0701 0060N	WASHER DIA6	17 - 109
0701 0080N	WASHER DIA8	23 - 105

Part No.	Description	Page and Index No.
0703 0060N	SPRING WASHER DIA6	19 - 110
0708 0050N	WASHER DIA5	47 - 115
0710 0040N	HEXAGONAL NUT:M4	19 - 104
0720 0020E	RETAINING RING - M2	29 - 105
0720 0020E	RETAINING RING - M2	41 - 106
0720 0020E	RETAINING RING - M2	45 - 106
0720 0030E	RETAINING RING - M3	9 - 105
0720 0030E	RETAINING RING - M3	11 - 114
0720 0030E	RETAINING RING - M3	13 - 109
0720 0030E	RETAINING RING - M3	27 - 108
0720 0030E	RETAINING RING - M3	35 - 104
0720 0030E	RETAINING RING - M3	45 - 102
0720 0030E	RETAINING RING - M3	67 - 103
0720 0040E	RETAINING RING - M4	9 - 108
0720 0040E	RETAINING RING - M4	11 - 108
0720 0040E	RETAINING RING - M4	17 - 103
0720 0040E	RETAINING RING - M4	29 - 108
0720 0040E	RETAINING RING - M4	35 - 106
0720 0040E	RETAINING RING - M4	37 - 102
0720 0040E	RETAINING RING - M4	39 - 107
0720 0040E	RETAINING RING - M4	43 - 104
0720 0040E	RETAINING RING - M4	45 - 108
0720 0040E	RETAINING RING - M4	59 - 102
0720 0040E	RETAINING RING - M4	63 - 104
0720 0040E	RETAINING RING - M4	65 - 101
0720 0040E	RETAINING RING - M4	67 - 102
0720 0040E	RETAINING RING - M4	69 - 102
0720 0040E	RETAINING RING - M4	71 - 104
0720 0040E	RETAINING RING - M4	75 - 102
0720 0040E	RETAINING RING - M4	77 - 101
0720 0040E	RETAINING RING - M4	79 - 102
0720 0040G	RETAINING RING - M4	47 - 111
0720 0040G	RETAINING RING - M4	55 - 106

Part No.	Description	Page and Index No.
0720 0050E	RETAINING RING - M5	25 - 103
0720 0050E	RETAINING RING - M5	27 - 110
0720 0050G	RETAINING RING - M5	47 - 112
0720 0050G	RETAINING RING - M5	51 - 110
0720 0050G	RETAINING RING - M5	53 - 106
0720 0060E	RETAINING RING - M6	15 - 103
0720 0060E	RETAINING RING - M6	17 - 110
0720 0060E	RETAINING RING - M6	19 - 106
0720 0060E	RETAINING RING - M6	21 - 101
0720 0060E	RETAINING RING - M6	27 - 103
0720 0060E	RETAINING RING - M6	29 - 104
0720 0060E	RETAINING RING - M6	33 - 101
0720 0060E	RETAINING RING - M6	39 - 102
0720 0060E	RETAINING RING - M6	65 - 105
0720 0080E	RETAINING RING - M8	11 - 105
0720 0080E	RETAINING RING - M8	19 - 107
0720 0080E	RETAINING RING - M8	35 - 101
0720 0080E	RETAINING RING - M8	37 - 113
0720 0080E	RETAINING RING - M8	39 - 103
0720 0080E	RETAINING RING - M8	43 - 102
0720 0080G	C-RING - M8	55 - 108
0725 0160E	RETAINING RING C - M16	55 - 109
0725 0170E	RETAINING RING C - M17	49 - 101
0740 3008	BALL BEARING - 8X22X7	33 - 113
0740 3010	BALL BEARING - 10X26X8MM	35 - 109
0740 3010	BALL BEARING - 10X26X8MM	43 - 103
0740 3206	BALL BEARING - 6X19X6	53 - 107
0740 3505	BEARING	35 - 107
0740 3908	BALL BEARING - 8X19X6	65 - 104
0741 3506	BALL BEARING - 6X12X4 MM	17 - 102
0741 3706	BALL BEARING - 6X10X3	33 - 110
0741 3706	BALL BEARING - 6X10X3	67 - 101
0800 0072	PHILIPS PAN HEAD SCREW - M2.6X4	31 - 107

Part No.	Description	Page and Index No.
0802 5312	TAPPING SCREW:WASHER:3X10	61 - 104
0804 6123	HEXAGONAL BOLT:W/WASHER:M3X8	57 - 105
0804 6123	HEXAGONAL BOLT:W/WASHER:M3X8	59 - 104
0804 6123	HEXAGONAL BOLT:W/WASHER:M3X8	61 - 102
0805 0088	RETAINING RING - M6	61 - 103
0805 3134	BALL BEARING - 10X26X8MM	17 - 111
0805 3205	BALL BEARING - 10X19X7MM	15 - 108
0805 3205	BALL BEARING - 10X19X7MM	19 - 111
0805 3205	BALL BEARING - 10X19X7MM	39 - 113
0805 3368	BALL BEARING - 8X16X5MM	27 - 109
0805 3385	BUSHING - 6MM	75 - 101
0805 3385	BUSHING - 6MM	77 - 103
0805 3386	BUSHING - 8MM	33 - 102
0805 3444	BALL BEARING - 25X37X7	15 - 104
0807 4069	WASHER - 6.2X12X0.4MM	35 - 108
0807 5044	SPACER - 8.1MM X 11.5MM X 0.2	29 - 106
0807 5071	SPACER - 10X0.5MM	25 - 113
0807 7013	SPACER - 10.2X14X0.2 MM	43 - 108
0807 7092	SPACER - 10.5/16	37 - 112
0807 7114	WASHER - 16X24X0.3MM	49 - 104
0807 7114	WASHER - 16X24X0.3MM	55 - 107
0951 3004N	SCREW:POLISHED ROUND:M3X4	63 - 105
0951 3004Z	PHILIPS SCREW WITH FLAT WASHER-M3X4	47 - 118
0951 3004Z	PHILIPS SCREW WITH FLAT WASHER-M3X4	49 - 102
0951 3006N	SCREW - M3X6	11 - 106
0951 3006N	SCREW - M3X6	17 - 107
0951 3006Z	PHILIPS SCREW WITH FLAT WASHER - M3	47 - 102
0951 3006Z	PHILIPS SCREW WITH FLAT WASHER - M3	51 - 104
0951 3006Z	PHILIPS SCREW WITH FLAT WASHER - M3	53 - 108
0951 3006Z	PHILIPS SCREW WITH FLAT WASHER - M3	55 - 104
0951 3008Z	PHILIPS SCREW WITH FLAT WASHER - M3	47 - 103
0951 4006N	SCREW:POLISHED ROUND:M4X6	17 - 112
0951 4006Z	PHILIPS SCREW WITH FLAT WASHER - M4	47 - 101

Part No.	Description	Page and Index No.
0951 4006Z	PHILIPS SCREW WITH FLAT WASHER - M4	49 - 106
0951 4006Z	PHILIPS SCREW WITH FLAT WASHER - M4	51 - 107
0951 4006Z	PHILIPS SCREW WITH FLAT WASHER - M4	53 - 102
0951 4008N	SCREW:POLISHED ROUND:M4X8	15 - 105
0951 4008Z	PHILIPS SCREW WITH FLAT WASHER - M4X8	47 - 104
0951 4008Z	PHILIPS SCREW WITH FLAT WASHER - M4X8	49 - 107
0951 4008Z	PHILIPS SCREW WITH FLAT WASHER - M4X8	51 - 109
0951 4008Z	PHILIPS SCREW WITH FLAT WASHER - M4X8	53 - 104
0951 4010Z	PHILIPS SCREW WITH FLAT WASHER - M4	51 - 111
1102 8501	CONNECTOR:54679-1609	57 - 108
1102 9861	DRAWER CONNECTOR	47 - 113
1105 0005	NYLON CLAMP - 3N	25 - 106
1105 0005	NYLON CLAMP - 3N	39 - 110
1105 0016	NYLON CLAMP - 4N	25 - 112
1105 0016	NYLON CLAMP - 4N	47 - 117
1105 0016	NYLON CLAMP - 4N	53 - 103
1105 0193	NYLON STUD	47 - 110
1105 0234	CLAMP	33 - 104
1105 0329	CLAMP - ES-0510	47 - 106
1105 0487	HARNESS CLAMP	25 - 111
1105 0487	HARNESS CLAMP	47 - 116
1105 0487	HARNESS CLAMP	51 - 105
1105 0487	HARNESS CLAMP	73 - 107
1105 0487	HARNESS CLAMP	75 - 104
1105 0487	HARNESS CLAMP	83 - 105
1105 0488	HARNESS CLAMP	31 - 105
1105 0488	HARNESS CLAMP	73 - 106
1105 0489	HARNESS CLAMP - LWS 1316	15 - 102
1105 0489	HARNESS CLAMP - LWS 1316	21 - 106
1105 0489	HARNESS CLAMP - LWS 1316	83 - 112
1105 0489	HARNESS CLAMP - LWS 1316	85 - 104
1105 0490	HARNESS CLAMP - IWS-2218	21 - 107
1105 0490	HARNESS CLAMP - IWS-2218	83 - 104

Part No.	Description	Page and Index No.
1105 0490	HARNESS CLAMP - IWS-2218	85 - 103
1105 0508	HARNESS CLAMP - LWS-0711	9 - 110
1105 0511	HARNESS CLAMP - LWS-0306ZC	9 - 107
1105 0511	HARNESS CLAMP - LWS-0306ZC	11 - 104
1105 0511	HARNESS CLAMP - LWS-0306ZC	13 - 101
1105 0511	HARNESS CLAMP - LWS-0306ZC	17 - 101
1105 0511	HARNESS CLAMP - LWS-0306ZC	21 - 103
1105 0511	HARNESS CLAMP - LWS-0306ZC	27 - 107
1105 0511	HARNESS CLAMP - LWS-0306ZC	31 - 104
1105 0511	HARNESS CLAMP - LWS-0306ZC	33 - 108
1105 0511	HARNESS CLAMP - LWS-0306ZC	37 - 106
1105 0511	HARNESS CLAMP - LWS-0306ZC	39 - 108
1105 0511	HARNESS CLAMP - LWS-0306ZC	41 - 101
1105 0511	HARNESS CLAMP - LWS-0306ZC	43 - 113
1105 0511	HARNESS CLAMP - LWS-0306ZC	45 - 103
1105 0511	HARNESS CLAMP - LWS-0306ZC	47 - 108
1105 0511	HARNESS CLAMP - LWS-0306ZC	51 - 108
1105 0511	HARNESS CLAMP - LWS-0306ZC	61 - 107
1105 0511	HARNESS CLAMP - LWS-0306ZC	69 - 103
1105 0511	HARNESS CLAMP - LWS-0306ZC	75 - 107
1105 0516	CLAMP	5 - 105
1105 0516	CLAMP	9 - 109
1105 0516	CLAMP	25 - 108
1105 0516	CLAMP	29 - 107
1105 0516	CLAMP	73 - 108
1105 0516	CLAMP	83 - 113
1105 0534	CLAMP	9 - 115
1105 0534	CLAMP	29 - 102
1105 0534	CLAMP	43 - 109
1105 0534	CLAMP	67 - 110
1105 0534	CLAMP	69 - 110
1105 0551	CLAMP:LES-0505	11 - 107
1105 0551	CLAMP:LES-0505	27 - 106

Part No.	Description	Page and Index No.
1105 0551	CLAMP:LES-0505	31 - 106
1105 0551	CLAMP:LES-0505	45 - 112
1105 0551	CLAMP:LES-0505	47 - 105
1105 0551	CLAMP:LES-0505	67 - 109
1105 0551	CLAMP:LES-0505	69 - 109
1105 0551	CLAMP:LES-0505	85 - 101
1105 0723	CLAMPS:WES-0507	5 - 104
1105 0723	CLAMPS:WES-0507	13 - 102
1105 0723	CLAMPS:WES-0507	21 - 109
1105 0723	CLAMPS:WES-0507	87 - 103
1105 0724	CLAMPS:WES-1210	47 - 107
1105 0725	CLAMPS:WES-1117	83 - 102
1105 0726	CLAMPS:WES-2217	83 - 106
1106 0167	BUSHING - 11MM	9 - 106
1106 0167	BUSHING - 11MM	11 - 110
1106 0349	BUSHING - 25	11 - 109
1106 0922	BUSHING:JKR-60	83 - 110
1106 0923	BUSHING:JKR-100	83 - 109
1107 1294	FUSE:GLASS CARTRIDGE:FSL 250V 2A(EM)	83 - 108
1107 1295	FUSE:GLASS CARTRIDGE:FSL 250V 6.3A(EM)	83 - 107
1107 1297	FUSE:GLASS CARTRIDGE:FSL 250V 10A(EM)	83 - 115
1150 0377	POWER SUPPLY CODE:250V:10A:EU	85 - 107
1204 2723	SWITCH:AM51612A531N	13 - 107
1407 7459	RAM:FM25V05-PGC(REV.AB)	87 - 105
1407 7520	RAM:FM25V02-PG(REV.AA)	83 - 116
1607 1713	FERRITE CORE:ZCAT1730-0730A	7 - 103
1607 1859	FERRITE CORE:E04SR241336A	3 - 109
2803 0006	CORD BINDER	3 - 110
5053 0223	BUSHING - 8MM	11 - 2
5053 0223	BUSHING - 8MM	25 - 15
5053 0223	BUSHING - 8MM	27 - 31
5053 0419	BUSHING - 10MM	17 - 22
5053 0419	BUSHING - 10MM	37 - 33

Part No.	Description	Page and Index No.
5053 0447	BUSHING - 6MM	37 - 2
5070 0923	SPRING WASHER - ROTATING TABLE	23 - 10
5206 2684	SHOULDER SCREW - M3	31 - 6
5206 2686	SNAP RING	11 - 12
5304 1639	BUSHING - 8MM	39 - 5
5324 1658	BUSHING- 4X8X4.5MM	45 - 4
5442 1924	EXPOSURE GLASS CUSHION	57 - 14
5443 2713	WAVE WASHER	23 - 23
5446 3108	SPACER - 1.5X4.2X11MM	35 - 26
5447 2681	SNAP RING	21 - 7
5447 2681	SNAP RING	77 - 21
5506 1536	SCREW - M4X6	23 - 9
5606 2310	ROLLER	25 - 5
5875 2088	SHOULDER SCREW - M4	47 - 14
5875 2088	SHOULDER SCREW - M4	73 - 17