DDP 92

Digital Document Publisher

Laser Printer Parts Catalog

© 2005 Ricoh Printing Systems, Ltd.

Mar, 2008
N903323

COMPONENT BLOCK TABLE

DWG. CODE	BLOCK		DWG.No.	LIST.No.	REMARKS
	SYMBOL	TITLE			
1	K	Final Ass'y	N517428	N517429	
2	PO	Optical Unit	N517430	N517431	
3	PM	EP Section	N517432	N517433	
4	PMP	Drum Module Ass'y	N517434	N517435	
5	PMC	Charger Ass'y	N517436	N517437	
6	PMD	Developer Unit Ass'y	N517438	N517439	
7	PMH	Toner Hopper Ass'y	N517440	N517441	
8	PMK	Drum Drive Unit	N517442	N517443	
9	PH	Paper Feed Block Ass'y	N517444	N517445	
10	PHF	Fuser Unit Ass'y	N517446	N517447	
11	PHM	Multi-bypass Feeder Ass'y	N517448	N517449	
12	PHR	Resist Ass'y	N517450	N517451	
13	PHT	TH Unit Ass'y	N517452	N517453	
14	PHS	Switch Back Ass'y	N517454	N517455	
15	PHD	Duplex Path Ass'y	N517456	N517457	
16	PTS	500Sheet Hopper Ass'y	N517458	N517459	
17	PTL	2000Sheet Hopper Ass'y	N517460	N517461	
18	PTV	Vertical Path Ass'y	N517462	N517463	
19	LH	3000Sheet Hopper Ass'y	N517464	N517465	
20	TP	Transit Pass Unit	N518892	N518893	

1

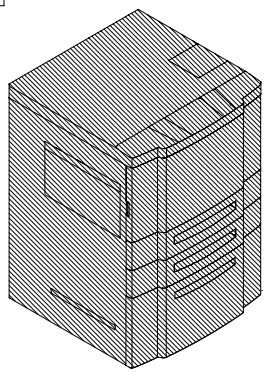

2

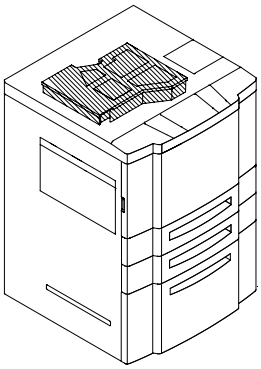

3

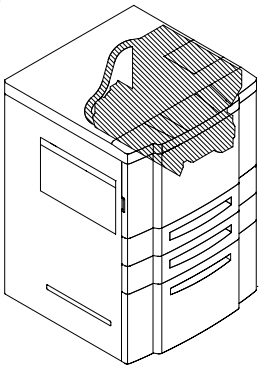

4

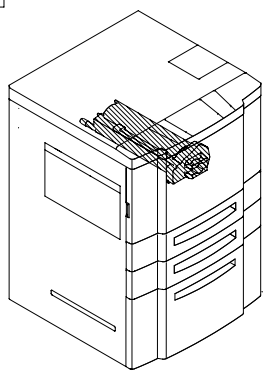

5

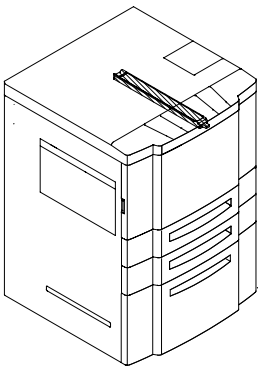

6

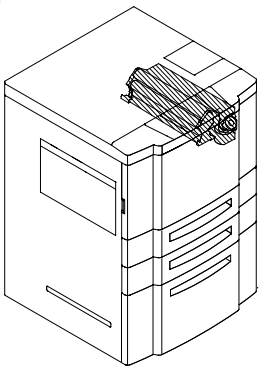

7

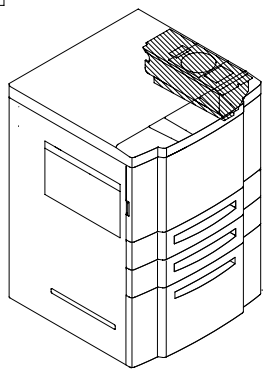

8

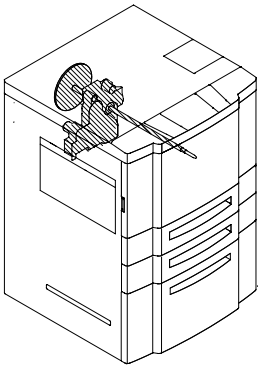

9

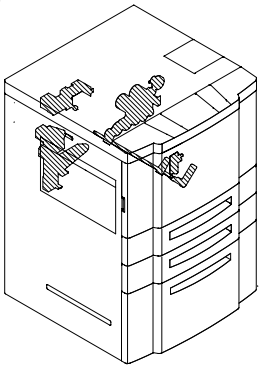

10

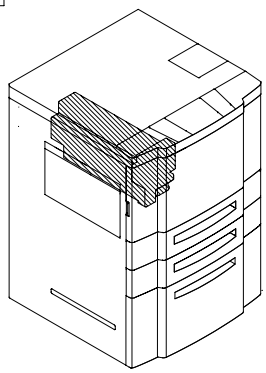

11

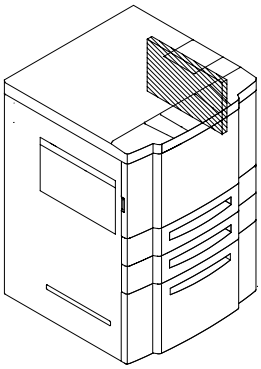

12

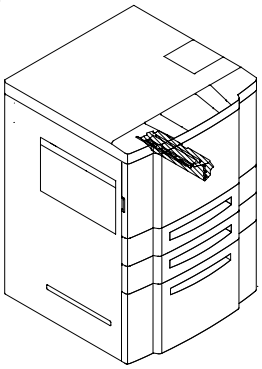

13

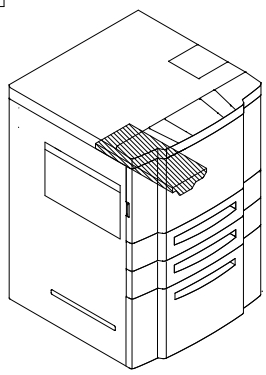

14

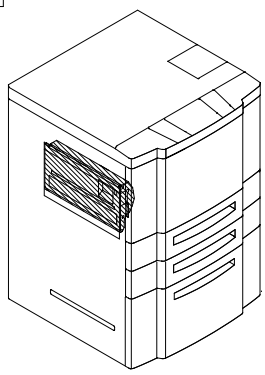

15

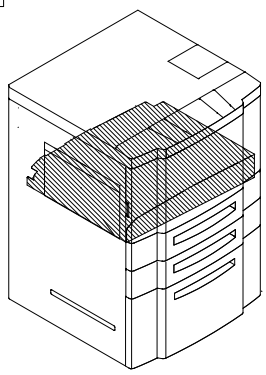

16

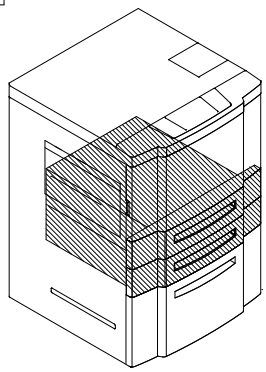

17

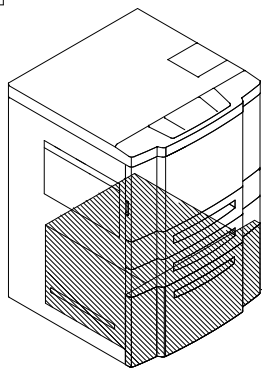

18

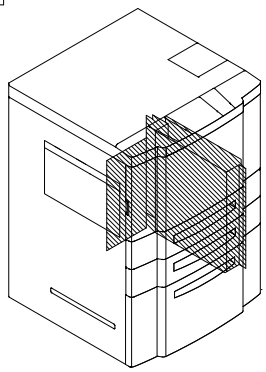

19

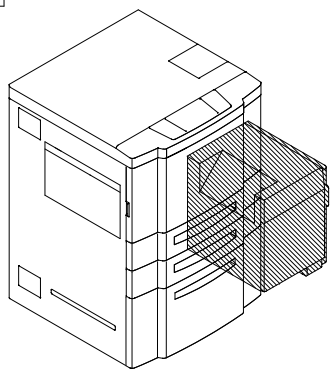

20

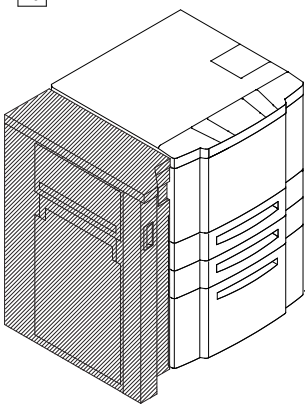

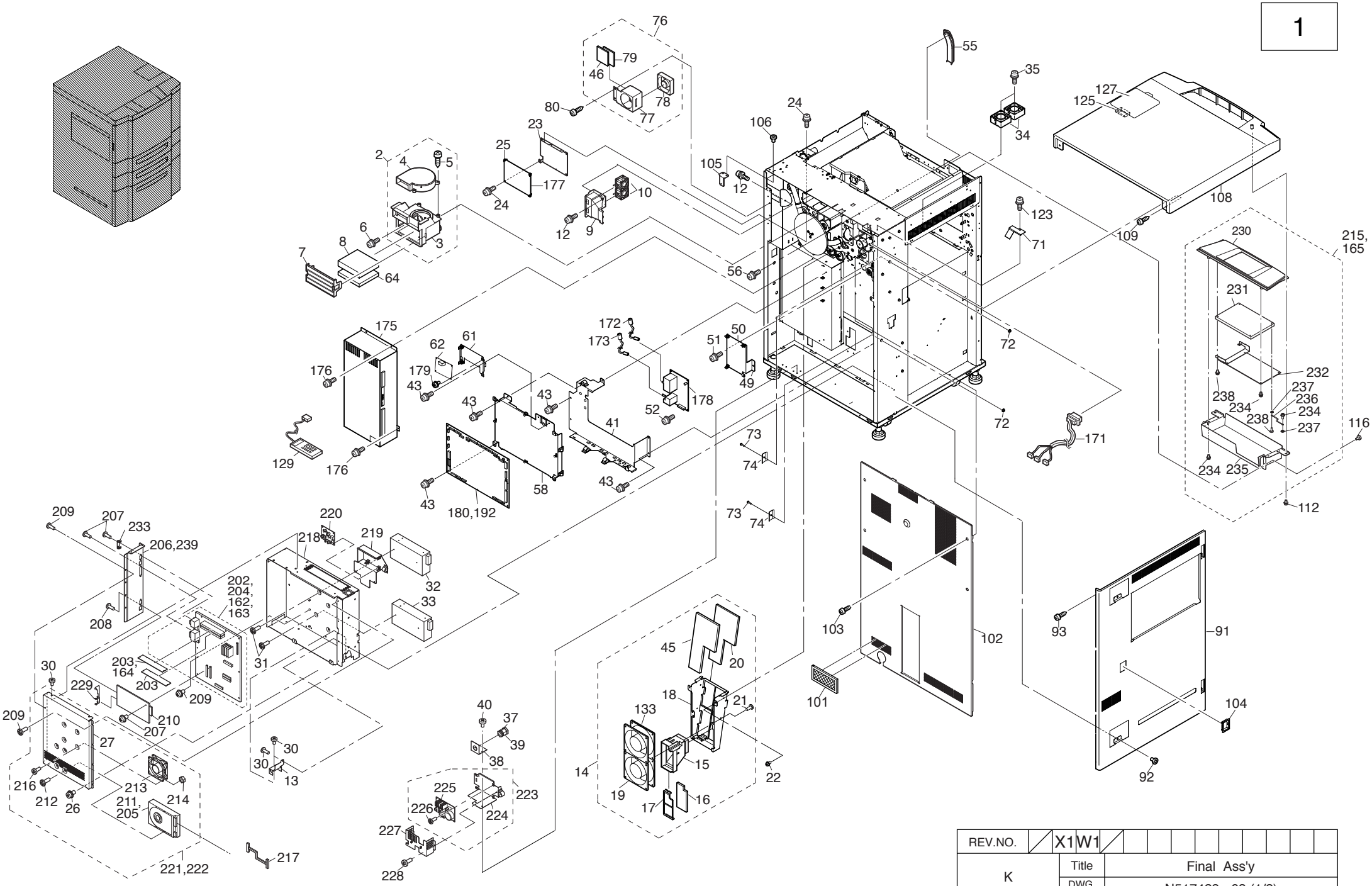

REV.NO.	X1	W1									
K	Title	Final Ass'y									
	DWG. No.	N517428 - 03 (1/2)									

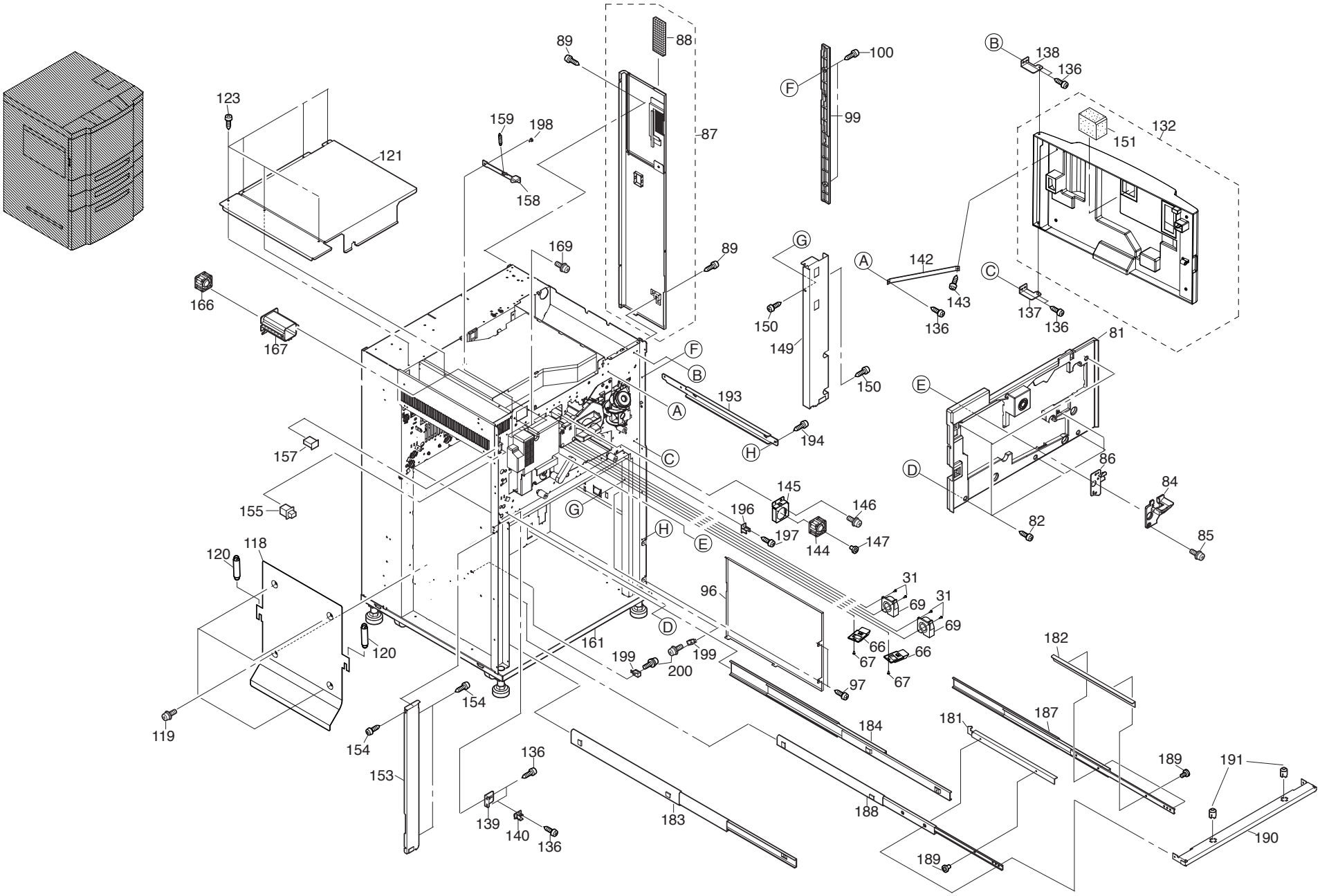

REV.NO.													
K	Title	Final Ass'y											
	DWG. No.	N517428 - 03 (2/2)											

*1: Do not use this parts for RoHS. *2: Use this parts only for RoHS(From S/N Q47604XXXXX).

*:Recommendable Spare Parts

	No.	Part No.		Part name	Q'ty	Remarks	REV. No.	Part No.		Part name	Q'ty	Remarks	REV. No.	Part No.		Part name	Q'ty	Remarks	REV. No.
	40	G1501160	8065203	Screw, M4×8 Pan Hd. Phillips with SW&W	2														
	39	G1501127	7903303	Code Lock	1														
	38	G1501760	N420111	Code Lock Holder	1														
	37	G1501128	7903313	Code Lock (Nat)	1														
	36																		
	35	G1501141	80152295	Screw, M4×30 Pan Hd. Phillips with SW&W	4														
*	34	G1501114	78101142	DC Fan	2	*1		G1505114	78101144	DC Fan	2								
*	33	G1501096	7365710	+5V Switching Regulater	1	*1		G1505096	73657102	+5V Switching Regulater	1								
*	32	G1501097	7365711	+12V Switching Regulater	1	*1		G1505097	73657112	+12V Switching Regulater	1								
	31	G1501154	8065103	Screw, M3×8 Pan Hd. Phillips with SW&W	8														
	30	G1501160	8065203	Screw, M4×8 Pan Hd. Phillips with SW&W	9														
	29																		
	28																		
	27	G1501253	N106026	CE Box(92) Cover	1														
	26	G1501014	70035085	Bind Screw, M4×8	2														
	25	G1501131	7907033	Holder	3														
	24	G1501153	8065102	Screw, M3×6 Pan Hd. Phillips with SW&W	4														
	23	G1501282	N212097	HVPS Holder	1														
	22	G1501027	7007606	Tap Screw, M4×8	2														
	21	G1501018	7005663	Tap Screw, M5×12	4														
*	20	G1501729	N4199104	Air Filter (1)	1														
*	19	G1501115	78101232	DC Fan	1	*1		G1505115	78101234	DC Fan	1								
	18	G1501637	N327003C	Cooling Fan Holder Ass'y	1														
	17	G1501597	N325268	Filter Plate	1														
*	16	G1501730	N4199105	Air Filter (2)	1														
	15	G1501241	N105002	Cooling Duct (Fuser)	1														
	14	G1501579	N324504A	Cooling Ass'y (1)	1														
	13	G1501390	N213882	LV Plate	1														
	12	G1501160	8065203	Screw, M4×8 Pan Hd. Phillips with SW&W	2														
	11																		
*	10	G1501554	N324305A	Fan Ass'y (3)	2	*1		G1505554	N324305B	Fan Ass'y (3)	2								
	9	G1501522	N323311A	DEV Cooling Fan Duct Ass'y	1														
*	8	G1501717	N417348	Ozone Filter	1														
	7	G1501519	N323308A	Ozone Chamber Lid Ass'y	1														
	6	G1501162	8065205	Screw, M4×12 Pan Hd. Phillips with SW&W	1														
	5	G1501023	7007566	Tap Screw, M4×16 Pan Hd. Phillips with W	3														
*	4	G1511051	N324937C	CBDC Sirocco Fan Ass'y	1	*1		G1511051	N324937F	CBDC Sirocco Fan Ass'y	1								
	3	G1501198	N104497	Ozone Chamber	1														
	2	G1511046	N323310C	Ozone Chamber Ass'y	1														
	1																		

Parts list No.	N517429-14 (1/6)	REV. No.		DATE	06 3

Block	K	Title	Final Ass'y
		DWG.No	N517428-03

1

Parts list No.	N517429-14 (2/6)	REV. No.		DATE	06 3

Block	K	Title	Final Ass'y	1
		DWG.No	N517428-03	

	No.	Part No.		Part name	Q'ty	Remarks	REV. No.	Part No.		Part name	Q'ty	Remarks	REV. No.	Part No.		Part name	Q'ty	Remarks	REV. No.
	80	G1501027	7007606	Tap Screw, M4×8	2														
*	79	G1501727	N4199102	Air Filter (3)	1														
*	78	G1501116	78101242	DC Fan	1	*1		G1505116	78101244	DC Fan	1								
	77	G1501578	N324502A	DEV Fan Holder Ass'y	1														
	76	G1501580	N324505A	Cooling (DEV) Ass'y	1														
	75																		
	74	G1501847	N422860	GND Plate	2														
	73	G1501163	8065207	Screw, M4×16 Pan Hd. Phillips with SW&W	2														
	72	G1501035	7037024	Flange Nut	2														
	71	G1501642	N327556	RC GND Plate	1														
	70																		
*	69	G1501117	7810160	DC Fan	2	*1		G1505117	78101602	DC Fan	2								
	68																		
	67	G1501051	7047054	Rivet	2														
*	66	G1501816	N421230A	Detouch Duct Ass'y	2														
	65																		
*	64	G1501732	N4199107	Air Filter	1														
	63																		
*	62	G1511029	N214687A	OC271 Ass'y	1	*1		G1515029	N214687B	OC271 Ass'y	1								
	61	G1501376	N213465	OC Plate	1														
	60																		
	59																		
	58	G1511013	N105539	CP Holder(92)	1														
	57																		
	56	G1501025	7007572	Tap Screw, M3×12 Pan Hd. Phillips with W	1														
	55	G1501520	N323309A	TH Ozone Duct Ass'y	1														
	54																		
	53																		
	52	G1501153	8065102	Screw, M3×6 Pan Hd. Phillips with SW&W	1														
	51	G1501160	8065203	Screw, M4×8 Pan Hd. Phillips with SW&W	2														
	50	G1501130	7907032	Holder	3														
	49	G1501358	N213161	HVPS Holder 2	1														
	48																		
	47																		
*	46	G1501625	N325867	Ozone Filter R2	1														
*	45	G1501624	N325866	Ozone Filter R1	1														
	44																		
	43	G1501160	8065203	Screw, M4×8 Pan Hd. Phillips with SW&W	12														
	42																		
	41	G1511053	N325858B	PK Holder Ass'y	1														

*1: Do not use this parts for RoHS. *2: Use this parts only for RoHS(From S/N Q47604XXXXX).

*:Recommendable Spare Parts

*1: Do not use this parts for RoHS. *2: Use this parts only for RoHS(From S/N Q47604XXXXX).

*:Recommendable Spare Parts

No.	Part No.		Part name	Q'ty	Remarks	REV. No.	Part No.		Part name	Q'ty	Remarks	REV. No.	Part No.		Part name	Q'ty	Remarks	REV. No.
120	G1501076	7062191	Tension Spring	2														
119	G1501153	8065102	Screw, M3×6 Pan Hd. Phillips with SW&W	4														
118	G1501347	N212813	Guide Plate	1														
117																		
116	G1501027	7007606	Tap Screw, M4×8	2														
115																		
114																		
113																		
112	G1501160	8065203	Screw, M4×8 Pan Hd. Phillips with SW&W	2														
111																		
110																		
109	G1501014	70035085	Bind Screw, M4×8	2														
108	G1501178	N000573	Top Cover	1														
107																		
106	G1501014	70035085	Bind Screw, M4×8	2														
105	G1501809	N421043	TC Holder	1														
104	G1501417	N3131562	Bush	1														
103	G1501014	70035085	Bind Screw, M4×8	6														
102	G1501218	N218903A	Rear Cover (ATT) Ass'y	1														
101							G1502042	N3312153	PS Air Filter	1								
100	G1501014	70035085	Bind Screw, M4×8	2														
99	G1501217	N104625	RH Cover	1														
98																		
97	G1501027	7007606	Tap Screw, M4×8	2														
96	G1501216	N104624	RH Side Low Cover	1	*1		G1505216	N104624	RH Side Low Cover	1								
95																		
94																		
93	G1501027	7007606	Tap Screw, M4×8	2														
92	G1501014	70035085	Bind Screw, M4×8	4														
91	G1501215	N104622	LH Cover	1														
90																		
89	G1501027	7007606	Tap Screw, M4×8	4														
* 88	G1501728	N4199103	Air Filter (4)	1														
87	G1501349	N212918A	RH Rear Side Cover Ass'y	1														
86	G1501807	N421038A	TH Hinge Ass'y	1														
85	G1501161	8065204	Screw, M4×10 Pan Hd. Phillips with SW&W	2														
84	G1501351	N212981	Inner Cover (S)	1														
83																		
82	G1501154	8065103	Screw, M3×8 Pan Hd. Phillips with SW&W	7														
81	G1501650	N328365A	Inner Cover Sub Ass'y	1		G2												

Parts list No.	N517429-14 (3/6)	REV. No.		DATE	06 3

Block	K	Title	Final Ass'y
		DWG.No.	N517428-03

Parts list No.	N517429-14 (4/6)	REV. No.		DATE	06 3

Block	K	Title	Final Ass'y	1
		DWG.No	N517428-03	

	No.	Part No.		Part name	Q'ty	Remarks	REV. No.	Part No.		Part name	Q'ty	Remarks	REV. No.	Part No.		Part name	Q'ty	Remarks	REV. No.
	160	G1501001	462228	Shoulder Screw	1														
*	159	G1501064	7062094	Extension Spring	1														
	158	G1501788	N420826A	Fuser Latch Ass'y	1														
*	157	G1501716	N415406C	Counter Ass'y (1)	1	*1	D1	G1505716	N415406D	Counter Ass'y (1)	1								
	156																		
*	155	G1501111	7534178	Push Button Switch	1	*1		G1505111	75341782	Push Button Switch	1								
	154	G1501027	7007606	Tap Screw, M4×8	3														
	153	G1501305	N212345	LH Plate	1														
	152																		
*	151	G1501861	N423751	Front Air Filter	1														
	150	G1501027	7007606	Tap Screw, M4×8	2														
	149	G1501214	N104595	RH Plate	1														
	148																		
	147	G1501883	80151925	M3X35 Screw	2														
	146	G1501160	8065203	Screw, M4×8 Pan Hd. Phillips with SW&W	2														
	145	G1501355	N213152	Fan Holder	1														
*	144	G1501554	N324305A	Fan Ass'y (3)	1	*1		G1505554	N324305B	Fan Ass'y (3)	1								
	143	G1501022	7007562	M4×12 Tap Screw	1														
*	142	G1501425	N315369	FD Cover Band	1														
	141																		
*	140	G1501470	N322883	Hopper Stopper	1														
	139	G1501763	N420221	FC Stopper Base	1														
	138	G1501765	N420224B	FC Hinge Ass'y	1														
	137	G1501764	N420224A	FC Hinge Ass'y	1														
	136	G1501027	7007606	Tap Screw, M4×8	8														
	135																		
	134																		
*	133	G1501113	78101133	DC Fan	1	*1		G1505113	78101134	DC Fan	1								
	132	G1501240	N104989A	Front Cover Ass'y	1														
	131																		
	130																		
*	129	G1501316	N212515	Maintenance Panel Ass'y	1	*1		G1505316	N2125152	Maintenance Panel Ass'y	1								
	128																		
	127	G1501243	N105013	Hopper Cover	1														
	126																		
	125	G1501359	N213207	Cover Hinge	1														
	124																		
	123	G1501027	7007606	Tap Screw, M4×8	7														
	122																		
	121	G1501221	N104674	Optical Cover	1														

*1: Do not use this parts for RoHS. *2: Use this parts only for RoHS(From S/N Q47604XXXXX).

*:Recommendable Spare Parts

*1: Do not use this parts for RoHS. *2: Use this parts only for RoHS(From S/N Q47604XXXXX).

*:Recommendable Spare Parts

	No.	Part No.		Part name	Q'ty	Remarks	REV. No.	Part No.		Part name	Q'ty	Remarks	REV. No.	Part No.		Part name	Q'ty	Remarks	REV. No.
	200	G1501157	8065107	Screw, M3×6 Pan Hd. Phillips with SW&W	2														
*	199	G1501106	7434220	EOF Sensor	1	*1		G1505106	74342202	EOF Sensor	1								
	198																		
	197	G1501026	7007600	Tap Screw, M3×8	2														
*	196	G1501470	N322883	Hopper Stopper	2														
	195																		
	194	G1501027	7007606	Tap Screw, M4×8	6														
	193	G1501300	N212281	Joint Bracket	1														
*	192							G1518034	N219490A	CP629 Ass`y	1	*2	W1						
*	191	G1501469	N322882	Hopper Position Pin	4														
	190	G1501396	N214544	Hopper Hold Plate (P1)	2														
	189	G1501013	70035065	Bind Screw, M4×6	12														
*	188	G1501275	N2120792	Slide Rail (5H)	2														
*	187	G1501274	N212079	Slide Rail (5H)	2														
	186	G1501154	8065103	Screw, M3×8 Pan Hd. Phillips with SW&W	1														
	185	G1501027	7007606	Tap Screw, M4×8	2														
*	184	G1501259	N2071442	Slide Rail (1)	1														
*	183	G1501258	N207144	Slide Rail (1)	1														
	182	G1501643	N327772	Hopper Hold Plate (P2)	2														
	181	G1501644	N327773	Hopper Hold Plate (P3)	2														
*	180	G1511034	N215795A	CP531 Ass'y	1	*1		G1511211	N215795B	CP531 Ass'y	1	*1							
	179	G1501153	8065102	Screw, M3×6 Pan Hd. Phillips with SW&W	2														
*	178	G1501339	N212751	High Voltage Power Supply (2)	1	*1		G1505339	N2127514	High Voltage Power Supply (2)	1								
*	177	G1521070	N2127502	High Voltage Power Supply (1)	1	*1		G1525070	N2127504	High Voltage Power Supply (1)	1								
	176	G1501027	7007606	Tap Screw, M4×8	3														
*	175	G1501337	N2127492	Low Voltage Power Supply	1	*1		G1505337	N2194395	Low Voltage Power Supply	1								
	174																		
*	173	G1501795	N420882	TR Cable Ass'y	1	*1		G1505795	N4208822	TR Cable Ass'y	1								
*	172	G1501794	N420881	DT Cable Ass'y	1	*1		G1505794	N4208812	DT Cable Ass'y	1								
*	171	G1521132	N330229	AC Cable Ass'y(2)	1	*1		G1525132	N3302292	AC Cable Ass'y(2)	1								
	170																		
	169	G1501162	8065205	Screw, M4×12 Pan Hd. Phillips with SW&W	2														
	168																		
	167	G1501238	N212993	MM Cooling Duct	1														
*	166	G1501553	N324303A	Fan Ass'y (1)	1	*1		G1505553	N324303D	Fan Ass'y (1)	1								
*	165							G1518035	N219578C	OCP(92) Ass'y	1	*2	X1	G1518035A	N219578C	OCP(92) Ass'y	1	*2	
*	164							G1508677	N335247A	DDR DIMM Ass'y	1	*2	X1						
*	163	G1518085	N337014K	Controller Board(92) Ass'y	1	*2 PSPCL	X1	G1518085A	N337014K	Controller Board(92) Ass'y	1	*2 PSPCL		G1518085B	N337014K	Controller Board(92) Ass'y	1	*2 PSPCL	
*	162	G1518094	N337014J	Controller Board(92) Ass'y	1	*2 PCL	X1	G1518094A	N337014J	Controller Board(92) Ass'y	1	*2 PCL		G1518094B	N337014J	Controller Board(92) Ass'y	1	*2 PCL	
	161	G1501174	N000567A	Mecha Frame Ass'y	1														

Parts list No.	N517429-14 (5/6)	REV. No.		X1													
		DATE	06.3	06.3	06.9	07.1	07.4										

Block	K	Title	Final Ass'y	1
		DWG.No.	N517428-03	

Parts list No.	N517429-14 (6/6)	REV. No.	X		X1														
		DATE	05-11	06-3	06-3	06-7	06-9	06-11	07-4	07-5	07-7	07-9	07-10	07-11	08-2	08-3			

Block	K	Title	Final Ass'y	1
		DWG.No	N517428-03	

	No.	Part No.		Part name	Q'ty	Remarks	REV. No.	Part No.		Part name	Q'ty	Remarks	REV. No.	Part No.		Part name	Q'ty	Remarks	REV. No.
	240																		
	239							G1508671	N337000A	I/O Pannel (DDP)Ass'y	1	*2	X1						
	238	G1501024	7007568	Tap Screw,M3x8 Pan Hd.Phillips with W	4														
	237	G1501134	80114045	D3 External Tooth Washer	2														
	236	G1501842	N422307	OCP Earth Cable Ass'y	1														
	235	G1501309	N212374A	Panel Holder Ass'y	1														
	234	G1501154	8065103	Screw,M3x8 Pan Hd.Phillips with SW&W	5														
	233							G1501893	N428824	Serial Connector Cover	1								
*	232	G1501407	N216418A	OCP Board (2) Ass'y	1														
	231	G1501109	7436110	LCD Module	1	*1													
	230	G1501631	N326093A	Panel Cover (M) Ass'y	1	*1													
	229							G1501894	N332433	GND Plate	1	Option							
	228	G1501153	8065102	Screw,M3X6 Pan Hd Phillips with SW&W	1														
	227	G1511067	N330141A	HD Cover Ass'y	1														
	226	G1501153	8065102	Screw,M3X6 Pan Hd Phillips with SW&W	4														
*	225	G1511033	N2152892	Heater Driver	1	*1		G1515033	N2194412	Heater Driver	1								
	224	G1511032	N214703	PK Holder(1)	1														
	223	G1511066	N330140A	Heater Driver Ass'y	1														
	222	G1511091	N215913T	CE Box(92) Cover Ass'y	1	PSPCL													
	221	G1511092	N215913S	CE Box(92) Cover Ass'y	1	PCL													
*	220	G1501676	N330497A	AC011 Ass'y	1	*1		G1505676	N330497B	AC011 Ass'y	1								
	219	G1501406	N215975	AC Detect PK Holder	1														
	218	G1501328	N212691A	CE Box Ass'y	1														
	217	G1501673	N330392	IDE Cable Ass'y	1														
	216	G1501016	70035125	M4X12 Bind Screw	4														
*	215	G1511035	N215909B	OCP(92) Ass'y	1	*1													
	214	G1501135	80130035	M4 Nut	4														
*	213	G1501675	N330459	FAN Ass'y(CE)	1	*1		G1505675	N337044A	FAN Ass'y(CE)	1								
	212	G1501857	N423732	6-32 Type SCREW	4														
*	211	G1515068G	N337102L	HDD (92DP)Ass'y	1	PCL		G1515068H	N337102L	HDD (92DP)Ass'y	1	PCL		G1515068I	N337102L	HDD (92DP)Ass'y	1	PCL	
*	210							G1501648	N330836B	Network Board Ass'y	1	*1 Option							
	209	G1501154	8065103	M3X8 SCREW	17														
	208							G1501858	N423735	Inch Screw (4-40 Type)	2	Option							
	207	G1501871	N426438	M2. 5X8 SCREW	4		UnitRevC												
	206	G1501671	N330390A	I/O Pannel (92) Ass'y	1	*1													
*	205	G1515093G	N337102M	HDD (92DP)Ass'y	1	PSPCL		G1515093H	N337102M	HDD (92DP)Ass'y	1	PSPCL		G1515093I	N337102M	HDD (92DP)Ass'y	1	PSPCL	
*	204	G1511085	N330385K	Controller Board(92) Ass'y	1	*1 PSPCL		G1511085A	N330385K	Controller Board(92) Ass'y	1	*1 PSPCL							
*	203	G1501677	N330647A	SDRAM(1) DIMM Ass'y	1	*1		G1501677	N330647A	SDRAM(1) DIMM Ass'y	2	*1							
*	202	G1511094	N330385J	Controller Board(92) Ass'y	1	*1 PCL		G1511094A	N330385J	Controller Board(92) Ass'y	1	*1 PCL							
	201	G1511040	N215914D	Controller Box(92) Ass'y	1														

*1: Do not use this parts for RoHS. *2: Use this parts only for RoHS(From S/N Q47604XXXXX).

*:Recommendable Spare Parts

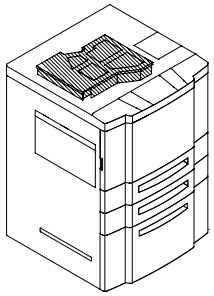

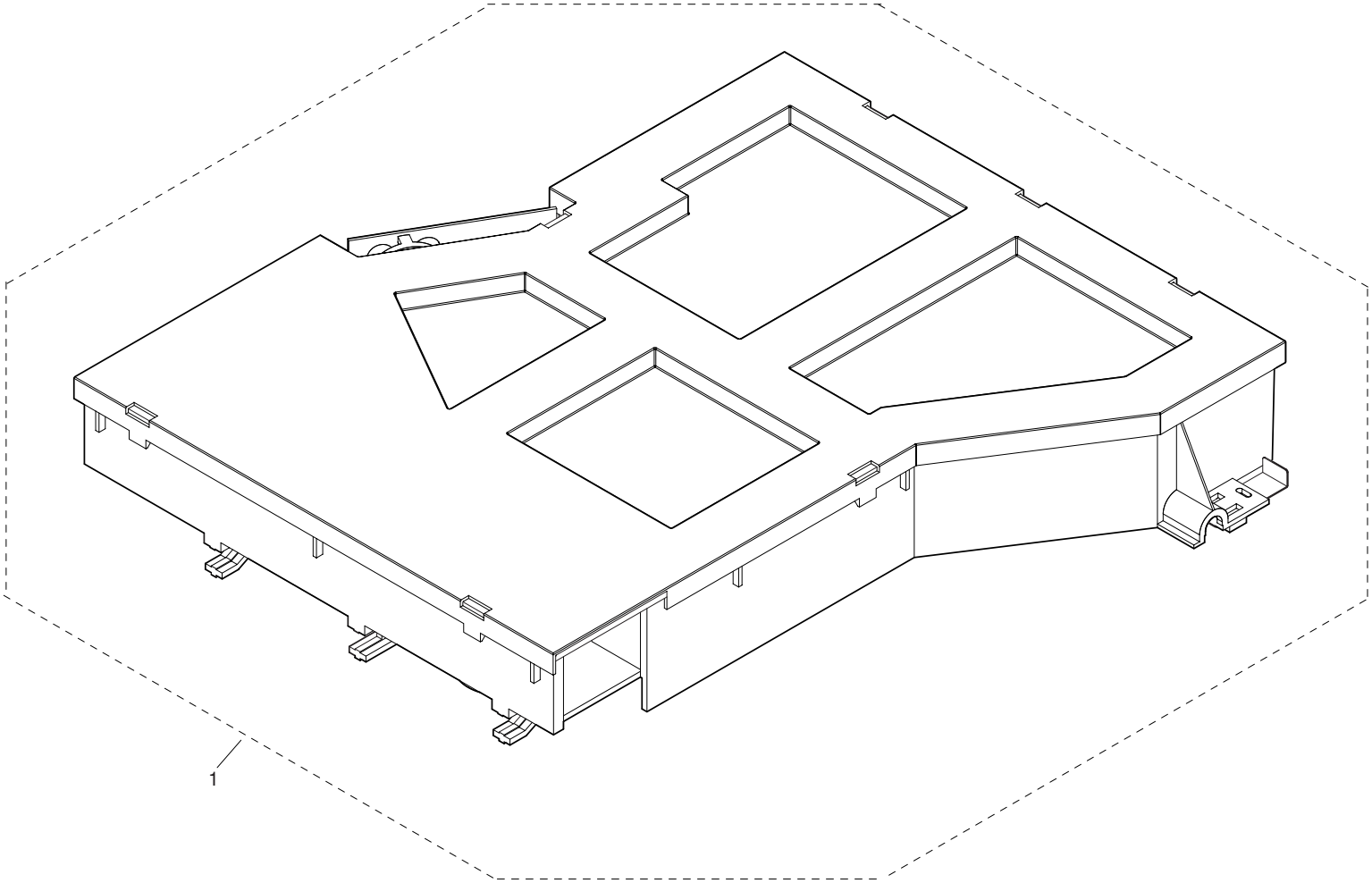

REV.NO.		
PO	Title	Optical Unit
	DWG. No.	N517430 - 00

*1: Do not use this parts for RoHS. *2: Use this parts only for RoHS(From S/N Q47604XXXXX).

*:Recommendable Spare Parts

No.	Part No.		Part name	Q'ty	Remarks	REV. No.	Part No.		Part name	Q'ty	Remarks	REV. No.	Part No.		Part name	Q'ty	Remarks	REV. No.
40																		
39																		
38																		
37																		
36																		
35																		
34																		
33																		
32																		
31																		
30																		
29																		
28																		
27																		
26																		
25																		
24																		
23																		
22																		
21																		
20																		
19																		
18																		
17																		
16																		
15																		
14																		
13																		
12																		
11																		
10																		
9																		
8																		
7																		
6																		
5																		
4																		
3																		
2																		
* 1	G1511016	N106284D	Optical Unit (G)	1	*1		G1511016	N106284K	Optical Unit (G)	1								

Parts list No.	N517431-01 (1/1)	REV. No.																	
		DATE	06 3																

Block	PO	Title	Optical Unit
		DWG.No.	N517430-00

2

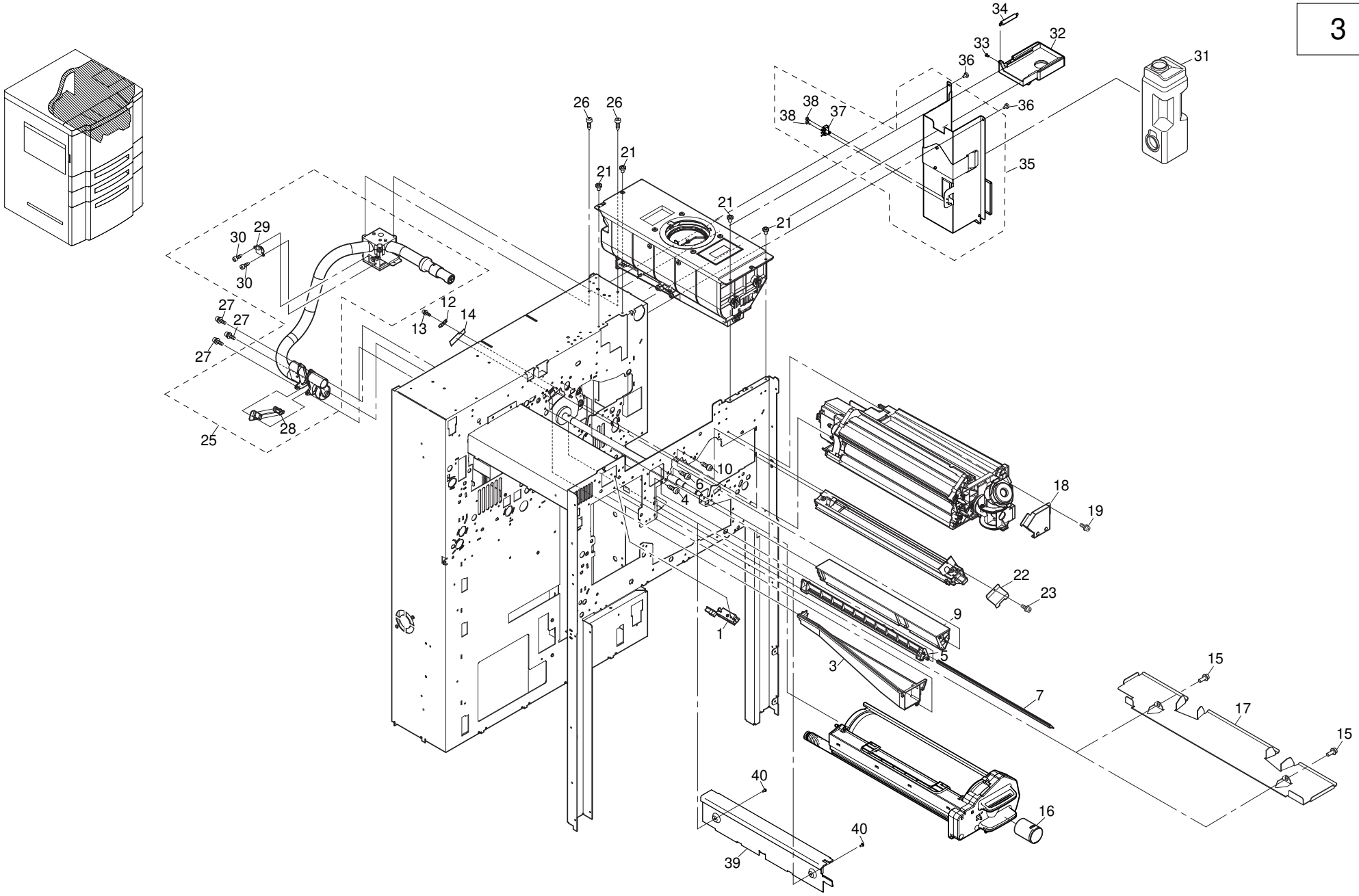

REV.NO.													
PM	Title	EP Section											
	DWG. No.	N517432 - 00											

*1: Do not use this parts for RoHS. *2: Use this parts only for RoHS(From S/N Q47604XXXXX).

*:Recommendable Spare Parts

	No.	Part No.		Part name	Q'ty	Remarks	REV. No.	Part No.		Part name	Q'ty	Remarks	REV. No.	Part No.		Part name	Q'ty	Remarks	REV. No.
	40	G1501154	8065103	M3×8 Screw, Pan Hd. Phillips No.3 ZN	2														
	39	G1501640	N327127A	Shield Plate Ass'y	1														
	38	G1501007	70030105	M2×10 Bind Screw	2														
*	37	G1501112	7562082	Micro Switch	1	*1		G1505112	75620822	Micro Switch	1								
	36	G1501027	7007606	M4×8 Tap Screw	2														
	35	G1501317	N212562A	Bottle Box Ass'y	1														
	34	G1501072	7062148	Extension Spring	1														
	33	G1501051	7047054	Rivet	1														
	32	G1501536	N323961A	Bottle Shutter Ass'y	1														
	31	G1501885	N217885B	Toner Bottle (W) Set Ass'y	1	3pcs.													
	30	G1501024	7007568	M3×8 Tap Screw	2														
*	29	G1501105	7395100	Toner Sensor	1	*1		G1505105	73951002	Toner Sensor	1								
*	28	G1501098	7390160	Photo Interrupter	1	*1		G1505098	73901602	Photo Interrupter	1								
	27	G1501162	8065205	M4×12 Screw, Pan Hd. Phillips No.3 ZN	3														
	26	G1501020	7007560	M4×10 Tap Screw	2														
*	25	G1501318	N212564A	Recycle Path Ass'y	1	*1		G1505318	N212564E	Recycle Path Ass'y	1								
	24																		
	23	G1501163	8065207	M4×16 Screw, Pan Hd. Phillips No.3 ZN	1														
	22	G1501832	N421649	Charger Stopper	1														
	21	G1501014	70035085	M4×8 Bind Screw	4														
	20																		
	19	G1501160	8065203	M4×8 Screw, Pan Hd. Phillips No.3 ZN	1														
	18	G1501824	N421370A	DEV Suport Spring Ass'y	1														
	17	G1511090	N215021	Toner Guard plate															
*	16	G1501537	N323968A	Drum Center Lock	1	*1		G1505537	N323968B	Drum Center Lock	1								
	15	G1501162	8065205	M4×12 Screw, Pan Hd. Phillips No.3 ZN	2														
	14	G1501787	N420825	Rear Seal	1														
	13	G1501153	8065102	M3×6 Screw, Pan Hd. Phillips No.3 ZN	1														
	12	G1501748	N420012	Rear Spring	1														
	11																		
	10	G1501020	7007560	M4×10 Tap+Screw	1														
	9	G1501539	N324027A	Duct (R) Ass'y	1														
	8																		
*	7	G1501108	7435301	LED Eraser	1	*1		G1505108	74353012	LED Eraser	1								
	6	G1501020	7007560	M4×10 Tap+Screw	1														
	5	G1501552	N324295A	Erase Holder Ass'y	1														
	4	G1501020	7007560	M4×10 Tap+Screw	1														
	3	G1501327	N212671A	Duct (L) Ass'y	1														
	2																		
*	1	G1501538	N323969	Wrap Sensor (1) Ass'y	1	*1		G1505538	N3239693	Wrap Sensor (1) Ass'y	1								

Parts list No.	N517433-01 (1/1)	REV. No.		DATE	06 3

Block	PM	Title	EP Section
		DWG.No.	N517432-00

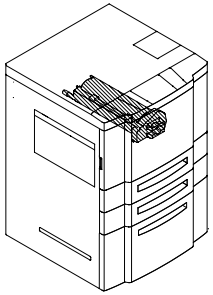

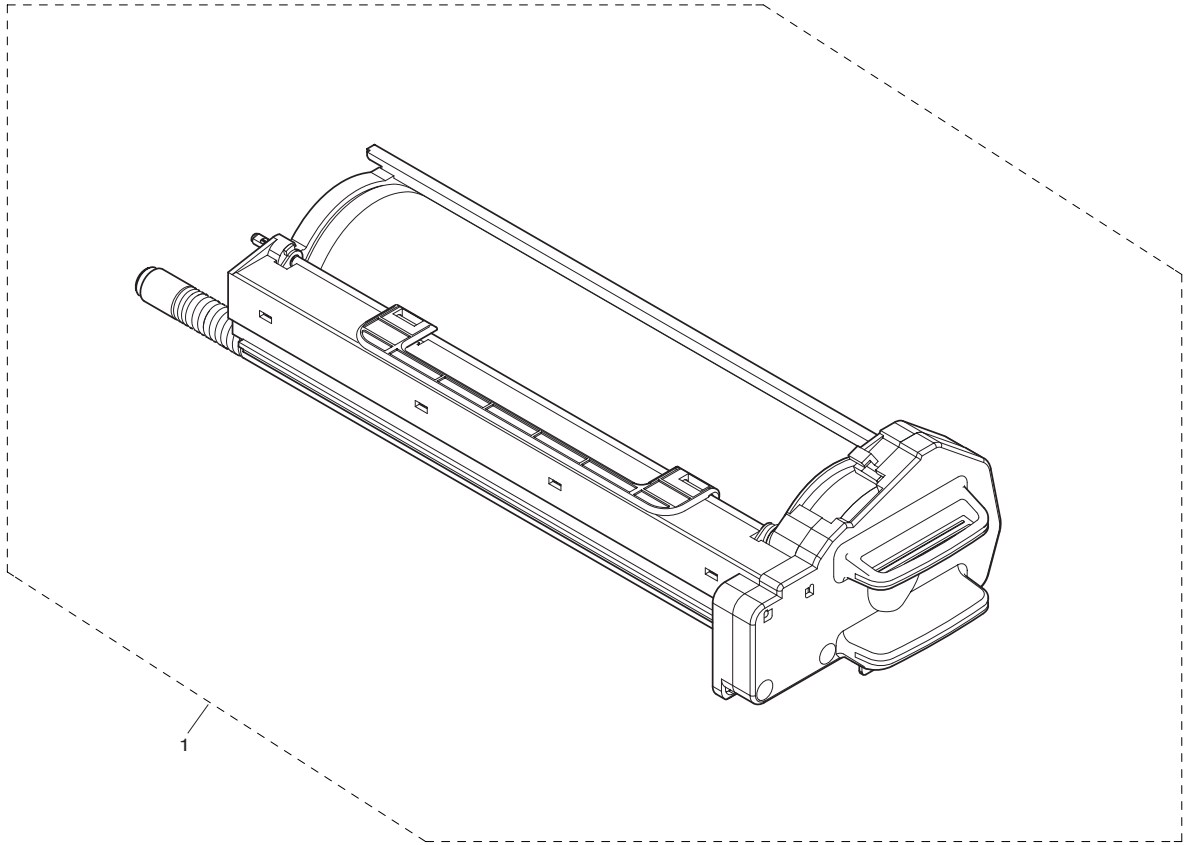

REV.NO.													
PMP	Title	Drum Module Ass'y											
	DWG. No.	N517434 - 00											

*1: Do not use this parts for RoHS. *2: Use this parts only for RoHS(From S/N Q47604XXXXX).

*:Recommendable Spare Parts

No.	Part No.		Part name	Q'ty	Remarks	REV. No.	Part No.		Part name	Q'ty	Remarks	REV. No.	Part No.		Part name	Q'ty	Remarks	REV. No.
40																		
39																		
38																		
37																		
36																		
35																		
34																		
33																		
32																		
31																		
30																		
29																		
28																		
27																		
26																		
25																		
24																		
23																		
22																		
21																		
20																		
19																		
18																		
17																		
16																		
15																		
14																		
13																		
12																		
11																		
10																		
9																		
8																		
7																		
6																		
5																		
4																		
3																		
2																		
1	G1501179	N000595Q	Drum Unit DDP70/92/184	1	*1		G1505179	N000595T	Drum Unit DDP70/92/184	1								

Parts list No.	N517435-01 (1/1)	REV. No.																	
		DATE	06 3																

Block	PMP	Title	Drum Module Ass'y	4
		DWG.No	N517434-00	

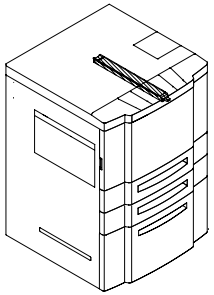

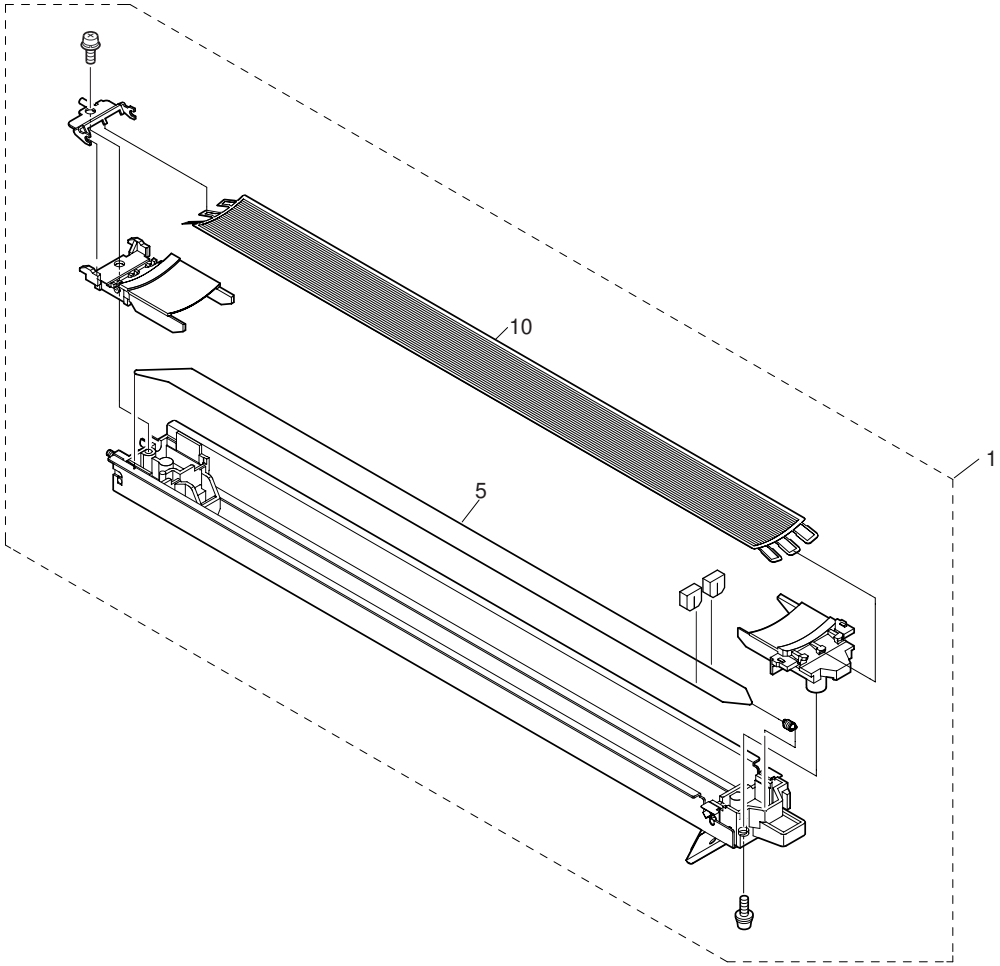

REV.NO.													
PMC	Title	Charger Ass'y											
	DWG. No.	N517436 - 00											

*1: Do not use this parts for RoHS. *2: Use this parts only for RoHS(From S/N Q47604XXXXX).

*:Recommendable Spare Parts

No.	Part No.		Part name	Q'ty	Remarks	REV. No.	Part No.		Part name	Q'ty	Remarks	REV. No.	Part No.		Part name	Q'ty	Remarks	REV. No.
40																		
39																		
38																		
37																		
36																		
35																		
34																		
33																		
32																		
31																		
30																		
29																		
28																		
27																		
26																		
25																		
24																		
23																		
22																		
21																		
20																		
19																		
18																		
17																		
16																		
15																		
14																		
13																		
12																		
11																		
* 10	G1501529	N323697	Grid	1														
9																		
8																		
7																		
6																		
* 5	G1501750	N420029	Corotron Wire	1														
4																		
3																		
2																		
* 1	G1501237	N104839A	Charger Ass'y	1	*1		G1505237	N104839C	Charger Ass'y	1								

Parts list No.	N517437-01 (1/1)	REV. No.		DATE	06 3

Block	PMC	Title	Charger Ass'y
		DWG.No	N517436-00

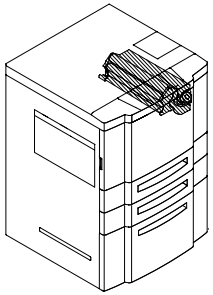

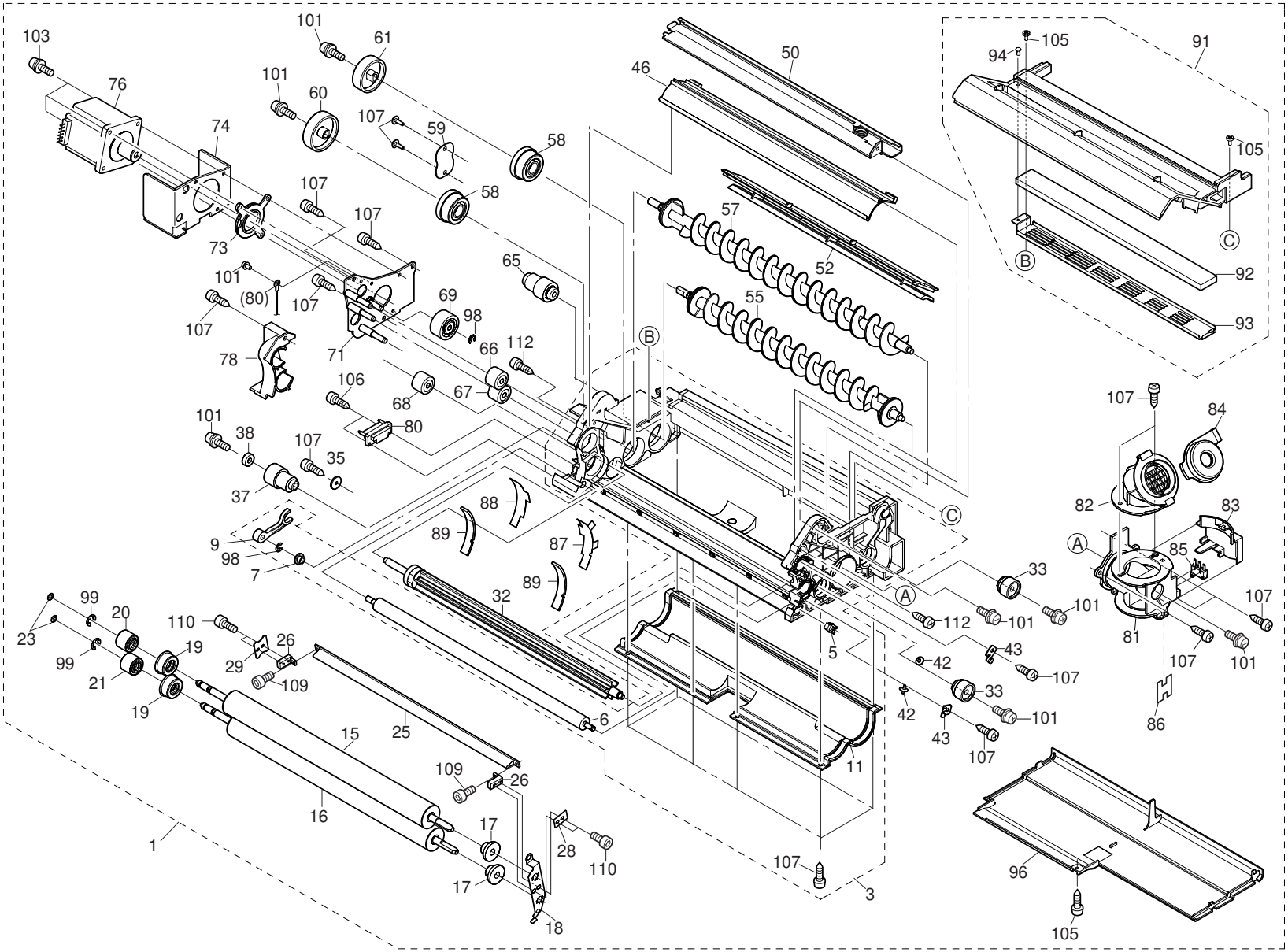

REV.NO.		
PMD	Title	Developer Unit Ass'y
	DWG. No.	N517438 - 00

*1: Do not use this parts for RoHS. *2: Use this parts only for RoHS(From S/N Q47604XXXXX).

*:Recommendable Spare Parts

No.	Part No.		Part name	Q'ty	Remarks	REV. No.	Part No.		Part name	Q'ty	Remarks	REV. No.	Part No.		Part name	Q'ty	Remarks	REV. No.
40																		
39																		
38	G1501040	7040126	B.B	1														
* 37	G1501873	N428352A	TR Gear M 2	1	UNIT REV.H													
36																		
35	G1501000	437086	VF Washer	1														
34																		
33	G1501772	N420289A	BB Holder TR (F) Ass'y	2														
32	G1501825	N421377A	TR Roll Ass'y	1														
31																		
30																		
29	G1501826	N421404	Doctor Fix Plate (Rear)	1														
28	G1501749	N420021	Doctor Fix Plate (R)	1														
27																		
26	G1501841	N422292	Doctor Holder D	2														
25	G1501508	N323079	Doctor Blade	1														
24																		
* 23	G1501152	8062205	O ring	2														
22																		
* 21	G1501704	N335270B	MGR Gear 2	1	UNIT REV.I													
* 20	G1501703	N335270A	MGR Gear 2	1	UNIT REV.I													
19	G1501774	N420291A	BB Holder MGR Ass'y	2														
18	G1501483	N322964	Mag-roll Bias Plate (F)	1														
17	G1501279	N212087	Magnet Roll FL (F)	2														
16	G1501268	N212044F	Magnet Roll (D30)	1														
15	G1501267	N212044E	Magnet Roll (D30)	1														
14																		
13																		
12																		
11	G1501340	N212770A	Bottom Plate Sub Ass'y	1														
10																		
* 9	G1501477	N322901	CR Clutch Arm	1														
8																		
7	G1501046	7044030	Sleeve Bearing	1														
6	G1501405	N215927A	Magnet Roll B (D16)	1														
5	G1501422	N314097	CR Flange (F)	1														
4																		
3	G1511011	N104776B	DEV. Frame Ass'y	1														
2																		
* 1	G1515006	N000603M	DEV. Unit Ass'y	1			G1511201	N000603M	DEV. Unit Ass'y	1	UNIT REV M.N		G1511219	N000603M	DEV. Unit Ass'y	1	UNIT REV O	

Parts list No.	N517439-03 (1/3)	REV. No.				DATE	06 3	07 1	07 6

Block	PMD	Title	Developer Unit Ass'y
		DWG.No	N517438-00

Parts list No.	N517439-03 (2/3)	REV. No.	DATE 06 3

Block	PMD	Title	Developer Unit Ass'y
		DWG.N	N517438-00

	No.	Part No.		Part name	Q'ty	Remarks	REV. No.	Part No.		Part name	Q'ty	Remarks	REV. No.	Part No.		Part name	Q'ty	Remarks	REV. No.
	80	G1501543	N324120	DEV. Cable	1														
	79																		
	78	G1501843	N422405A	DEV. Gear Cover Ass'y	1														
	77																		
*	76	G1511047	N324118B	DEV. Motor Ass'y	1	*1		G1515047	N324118D	DEV. Motor Ass'y	1								
	75																		
	74	G1501277	N212085	Motor Cooling Plate	1														
	73	G1501294	N212198	Motor Shim	1														
	72																		
	71	G1501476	N322895A	Motor Plate Weld Ass'y	1														
	70																		
*	69	G1501775	N420292A	Idler Gear (Z28) Ass'y	1														
*	68	G1501770	N420286A	Idler Gear (Z20) Ass'y	1														
*	67	G1501776	N420293A	Idler Gear (Z21) Ass'y	1														
*	66	G1501771	N420287A	Idler Gear (Z20-L) Ass'y	1														
*	65	G1501777	N420294A	Idler Gear (Z17/Z22) Ass'y	1														
	64																		
	63																		
	62																		
*	61	G1501556	N324311	Auger Gear (Z40)	1														
*	60	G1501557	N324312	Auger Gear (Z44)	1														
	59	G1501831	N421610	Auger Flange Fix Plate	1														
	58	G1501773	N420290A	Auger B Flange Ass'y	2														
	57	G1501528	N323376A	Auger Screw (B) Ass'y	1														
	56																		
	55	G1501527	N323375A	Auger Screw (A) Ass'y	1														
	54																		
	53																		
	52	G1501363	N213284A	Upper Scraper (2-W)	1														
	51																		
	50	G1501507	N323069	DEV. Frame Stay	1														
	49																		
	48																		
	47																		
	46	G1501540	N324115A	Bias Seal Plate Sub-ass'y	1														
	45																		
	44																		
	43	G1501744	N419989	Drum Roller Holder	2														
*	42	G1501821	N421312A	Drum Guide Roller Ass'y	2														
	41																		

*1: Do not use this parts for RoHS. *2: Use this parts only for RoHS(From S/N Q47604XXXXX).

*:Recommendable Spare Parts

*1: Do not use this parts for RoHS. *2: Use this parts only for RoHS(From S/N Q47604XXXXX).

No.	Part No.		Part name	Q'ty	Remarks	REV. No.	Part No.		Part name	Q'ty	Remarks	REV. No.	Part No.		Part name	Q'ty	Remarks	REV. No.
120																		
119																		
118																		
117																		
116																		
115																		
114																		
113																		
112	G1501028	7007607	Tap Screw, M4×12 Pan Hd. Phillips with W	2														
111																		
110	G1501005	70013147	M3×14 Hex Socket Bolt	4														
109	G1501004	70013068	M3×6 Hex Socket Bolt	2														
108																		
107	G1501022	7007562	Tap Screw, M4×12 Pan Hd. Phillips with W	20														
106	G1501025	7007572	Tap Screw, M3×12 Pan Hd. Phillips with W	2														
105	G1501024	7007568	Tap Screw, M3×8 Pan Hd. Phillips with W	3														
104																		
103	G1501163	8065207	Screw, M4×16 Pan Hd. Phillips with SW&W	3														
102																		
101	G1501160	8065203	Screw, M4×8 Pan Hd. Phillips with SW&W	8														
100																		
99	G1501088	7072027	Retaining Ring-E	2														
98	G1501086	7072025	Retaining Ring-E	2														
97																		
96	G1501171	N000543	Bottom Cover	1														
95																		
94	G1501049	7047052	Rivet	1														
93	G1501330	N212724	Inner Cover	1														
92	G1501762	N420120	Toner Filter	1														
91	G1501323	N212616A	DEV. Top Cover Ass'y	1														
90																		
89	G1501767	N420277	Drum Seal	2														
88	G1501768	N420278	Drum Seal (R)	1														
87	G1501769	N420279	Drum Seal (F)	1														
86	G1501868	N426119	TYPE-K LABEL	1														
* 85	G1501112	7562082	Micro Switch	1	*1		G1505112	75620822	Micro Switch	1								
84	G1501269	N212049	DEV. Duct Cap	1														
83	G1501278	N212086	DEV. Duct SW Cover	1														
82	G1501555	N324310A	DEV. Duct Sub-ass'y	1														
81	G1501541	N324116A	DEV. Duct Ass'y	1														

Parts list No.	N517439-03 (3/3)	REV. No.																
		DATE	06 3															

Block	PMD	Title	Developer Unit Ass'y
		DWG.No.	N517438-00

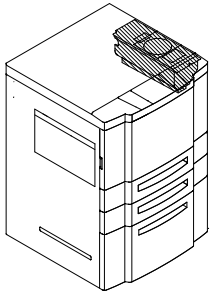

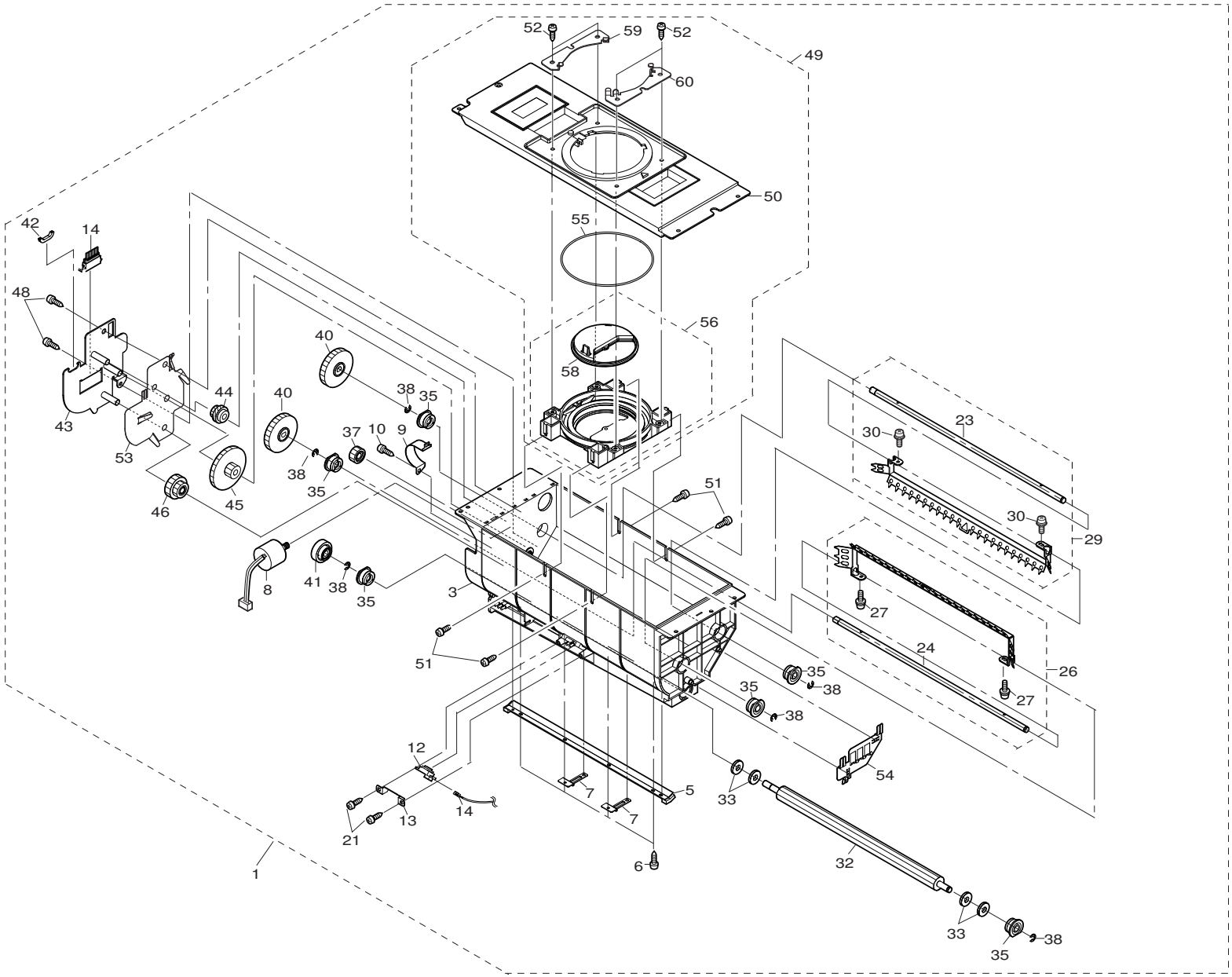

REV.NO.													
PMH	Title	Toner Hopper Ass'y											
	DWG. No.	N517440 - 00											

*1: Do not use this parts for RoHS. *2: Use this parts only for RoHS(From S/N Q47604XXXXX).

*:Recommendable Spare Parts

	No.	Part No.		Part name	Q'ty	Remarks	REV. No.	Part No.		Part name	Q'ty	Remarks	REV. No.	Part No.		Part name	Q'ty	Remarks	REV. No.
*	40	G1501284	N212158	Stir Gear	2														
	39																		
	38	G1501086	7072025	Retaining Ring-E	6														
*	37	G1501493	N323026	Idler Gear (D)	1														
	36																		
	35	G1501511	N323267	Sleeve Bearing	6														
	34																		
	33	G1501761	N420112	Feed Roll Seal	4														
	32	G1501490	N324292A	Toner Feed Roll Ass'y	1														
	31																		
	30	G1501154	8065103	M3×8 Screw	2														
	29	G1501547	N324178A	Stir Shaft (B) Ass'y	1														
	28																		
	27	G1501154	8065103	M3×8 Screw	2														
	26	G1501546	N324177A	Stir Shaft (A) Ass'y	1														
	25																		
	24	G1501489	N323019	Stir Shaft	1														
	23	G1501489	N323019	Stir Shaft	1														
	22																		
	21	G1501019	7007508	M4×8 Tap Screw	2														
	20																		
	19																		
	18																		
	17																		
	16																		
	15																		
	14	G1501559	N324346	Toner Hopper Sensor Cable Ass'y	1														
	13	G1501492	N323025	Toner Empty Sensor Holder	1														
*	12	G1501105	7395100	Toner Sensor	1	*1		G1505105	73951002	Toner Sensor	1								
	11																		
	10	G1501022	7007562	M4×12 Tap Screw	1														
	9	G1501416	N323127	Feed Motor Holder	1														
*	8	G1501548	N324180A	Toner Feed Motor Ass'y (2)	1	*1		G1505548	N324180B	Toner Feed Motor Ass'y (2)	1								
	7	G1501600	N325297	Hopper Holder	2														
	6	G1501024	7007568	M3×8 Tap Screw	4														
	5	G1501518	N323307A	Scraper Holder Ass'y	1														
	4																		
	3	G1501325	N212658A	Toner Hopper Sub Ass'y	1														
	2																		
*	1	G1501233	N104793A	Toner Hopper Ass'y	1	*1		G1505233	N104793H	Toner Hopper Ass'y	1								

Parts list No.	N517441-01 (1/2)	REV. No.		DATE	06 3

Block	PMH	Title	Toner Hopper Ass'y
		DWG.No	N517440-00

Parts list No.	N517441-01 (2/2)	REV. No.	DATE

Block	PMH	Title	Toner Hopper Ass'y
		DWG.No.	N517440-00

No.	Part No.		Part name	Q'ty	Remarks	REV. No.	Part No.		Part name	Q'ty	Remarks	REV. No.	Part No.		Part name	Q'ty	Remarks	REV. No.
80																		
79																		
78																		
77																		
76																		
75																		
74																		
73																		
72																		
71																		
70																		
69																		
68																		
67																		
66																		
65																		
64																		
63																		
62																		
61																		
60	G1501695	N332827	Cap Holder(F)	1	Unit Rev.J													
59	G1501683	N332042	Cap Holder	1	Unit Rev.A													
* 58	G1501815	N421223A	Cap Ass'y	1														
57																		
56	G1501523	N323312A	Bottle Holder Ass'y	1														
55	G1501077	7065049	O Ring	1														
54																		
53	G1501397	N214592	Toner Hopper Ground Plate	1														
52	G1501022	7007562	M4×12 Tap Screw	4														
51	G1501022	7007562	M4×12 Tap Screw	4														
50	G1501324	N212657A	Top Cover Sub Ass'y	1														
49	G1501392	N214112A	Top Cover Ass'y	1														
48	G1501022	7007562	M4×12 Tap Screw	2														
47																		
* 46	G1501494	N323027	Idler Gear (C)	1														
* 45	G1501283	N212157	Idler Gear (B)	1														
* 44	G1501495	N323028	Idler Gear (A)	1														
43	G1501333	N212729A	Idler Gear Holder Ass'y	1														
42	G1501129	7906001	Flexible grommet	1														
* 41	G1501510	N323266	Feed Gear	1														

*1: Do not use this parts for RoHS. *2: Use this parts only for RoHS(From S/N Q47604XXXXX).

*:Recommendable Spare Parts

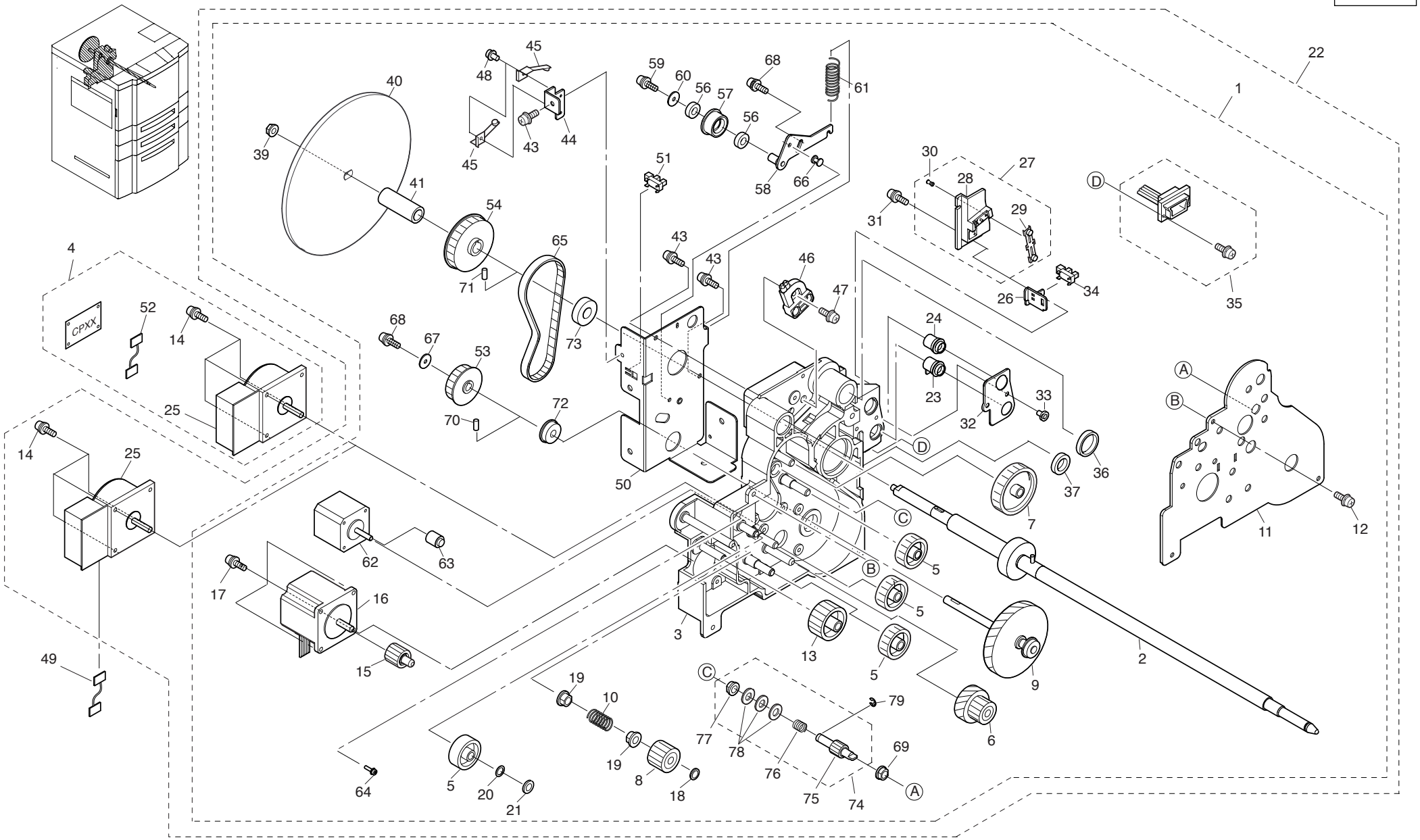

REV.NO.	W1											
PMK	Title	Drum Drive Unit										
	DWG. No.	N517442 - 02										

*1: Do not use these parts for RoHS. *2: Use these parts only for RoHS(From S/N Q47604XXXXX). *3: Use these parts for RoHS machine or Rev. W1 applied machine.

*:Recommendable Spare Parts

	No.	Part No.		Part name	Q'ty	Remarks	REV. No.	Part No.		Part name	Q'ty	Remarks	REV. No.	Part No.		Part name	Q'ty	Remarks	REV. No.
	40	G1501464	N322876	Fly Wheel	1														
	39	G1501036	7037027	Flanged Nut	1														
	38																		
	37	G1501488	N3229932	Seal (K)	1														
	36	G1501487	N3229933	Seal (K)	1														
*	35	G1501598	N325276	CP-DEV Cable Ass'y	1	*1		G1505598	N3252762	CP-DEV Cable Ass'y	1								
*	34	G1501098	7390160	Photo Interrupter	1	*1		G1505098	73901602	Photo Interrupter	1								
	33	G1501013	70035065	M4×6 Bind Screw	2														
	32	G1501799	N420908	Mgins Holder	1														
	31	G1501154	8065103	Screw, M3×8 Pan Hd. Phillips	2														
	30	G1501049	7047052	Rivet	1														
*	29	G1501568	N324437	DEV Bias Terminal	1	*1		G1505568	N3244372	DEV Bias Terminal	1								
	28	G1501276	N212083	Terminal Holder	1														
	27	G1501743	N419983A	MG Bias Terminal Ass'y	1														
	26	G1501473	N322887	MG Sensor Holder	1														
*	25							G1518023	N219005	DC Brushless Motor 2	1	*2	W1	G1518023	N219005	DC Brushless Motor 2	1	*3	W1
*	24	G1501813	N421057B	MG Insulator Ass'y	1														
*	23	G1501812	N421057A	MG Insulator Ass'y	1														
*	22							G1518009	N104655L	Drum Drive Unit	1	*2	W1						
	21	G1501146	80202105	D8 Bolt Washer	1														
	20	G1501002	488582	Poly Slider	1														
*	19	G1501045	7044020	Sleeve Bearing	2														
	18	G1501002	488582	Poly Slider	1														
	17	G1501162	8065205	Screw, M4×12 Pan Hd. Phillips	3														
*	16	G1511024	N2133192	Stepping Motor 8	1	*1		G1515024	N2133195	Stepping Motor 8	1								
*	15	G1501614	N325592	T. Motor Gear	1														
	14	G1501160	8065203	Screw, M4×8 Pan Hd. Phillips	3														
*	13	G1501444	N322793	T. Idle Gear	1														
	12	G1501140	80152185	Screw, M4×8	1														
	11	G1501367	N213328	Shaft Hold Plate (2)	1														
	10	G1501060	7061150	Compression Spring	1														
*	9	G1501735	N419936A	Drum Dirve Gear Ass'y	1														
*	8	G1501630	N326053	Coupling Gear Ass'y	1														
*	7	G1501445	N322794	CB. Shift Gear	1														
*	6	G1501629	N326052	C. Idle Gear Ass'y	1	*1		G1505629	N3260522	C. Idle Gear Ass'y	1								
*	5	G1501447	N322796	C. Idle Gear (2-1)	4														
*	4	G1511023	N2127382	DC Brushless Motor 1	1	*1		G1511209	N337455F	Drum Motor Kit	1	*1							
	3	G1501293	N212197A	Gear Housing Ass'y	1														
	2	G1501585	N324543A	Drum Drive Shaft Ass'y	1														
*	1	G1511009	N104655E	Drum Drive Unit	1	*1		G1511210	N104655S	Drum Drive Unit	1	*1							

Parts list No.	N517443-02 (1/2)	REV. No.	W1														
		DATE	06 3	06 3	06 12												

Block	PMK	Title	Drum Drive Unit
		DWG.No.	N517442-02

Parts list No.	N517443-02 (2/2)	REV. No.			DATE	06.3	06.12

Block	PMK	Title	Drum Drive Unit	8
		DWG.No	N517442-02	

	No.	Part No.		Part name	Q'ty	Remarks	REV. No.	Part No.		Part name	Q'ty	Remarks	REV. No.	Part No.		Part name	Q'ty	Remarks	REV. No.
	80																		
	79	G1501085	7072024	Retaining Ring-E	1														
	78	G1501002	488582	Poly Slider	3														
*	77	G1501045	7044020	Sleeve Bearing	1														
	76	G1501057	7061119	Compression Spring	1														
	75	G1501446	N322795	C. drive Gear Shaft	1														
*	74	G1501752	N420040A	C. drive Gear Shaft Ass'y	1	*1		G1505752	N420040B	C. drive Gear Shaft Ass'y	1								
*	73	G1501038	7040068	B.B	1														
*	72	G1501037	7040023	B.B	1														
	71	G1501033	7033515	Parallel Pin	1														
	70	G1501032	7033513	Parallel Pin	1														
*	69	G1501045	7044020	Sleeve Bearing	1														
	68	G1501160	8065203	Screw, M4×8 Pan Hd. Phillips	2														
	67	G1501000	437086	VF Washer	1														
	66	G1501052	7047061	Rivet	1														
*	65	G1501091	7082373	Timing Belt	1														
	64	G1501155	8065104	Screw, M3×10 Pan Hd. Phillips	3														
*	63	G1501613	N325591	Drive Gear (TH)	1														
*	62	G1511028	N214572	Stepping Motor 40	1	*1		G1515028	N2145722	Stepping Motor 40	1								
	61	G1501074	7062155	Extension Spring	1														
	60	G1501000	437086	VF Washer	1														
	59	G1501154	8065103	Screw, M3×8 Pan Hd. Phillips	1														
	58	G1501740	N419970A	Tension Roller Base Ass'y	1														
	57	G1501413	N312292	Tension Roller	1														
*	56	G1501042	7040910	B.B	2														
	55																		
*	54	G1501449	N322800	Pulley (Drum)	1														
*	53	G1501448	N322799	Pulley (Drum) 40	1														
	52							G1502071	N336369	Drum Motor Cable Ass'y (R)	1	*3	W1						
*	51	G1501098	7390160	Photo Interrupter	1	*1		G1505098	73901602	Photo Interrupter	1								
	50	G1501270	N212054	Drum Pully Holder	1														
	49							G1502070	N420868	Drum Motor Cable Ass'y	1	*1							
	48	G1501026	7007600	M3×8 Tap Screw	2														
	47	G1501162	8065205	Screw, M4×12 Pan Hd. Phillips	1														
	46	G1501280	N212090	Charger Socket	1	*1		G1505280	N2120904	Charger Socket	1								
*	45	G1501423	N314118	Shaft GND Brush (2)	2	*1		G1505423	N3141182	Shaft GND Brush (2)	2								
	44	G1501567	N420909	GND Holder	1														
	43	G1501160	8065203	Screw, M4×8 Pan Hd. Phillips	1														
	42																		
	41	G1501742	N419976	FW Holder	1														

*1: Do not use these parts for RoHS. *2: Use these parts only for RoHS(From S/N Q47604XXXXX). *3: Use these parts for RoHS machine or Rev. W1 applied machine.

*:Recommendable Spare Parts

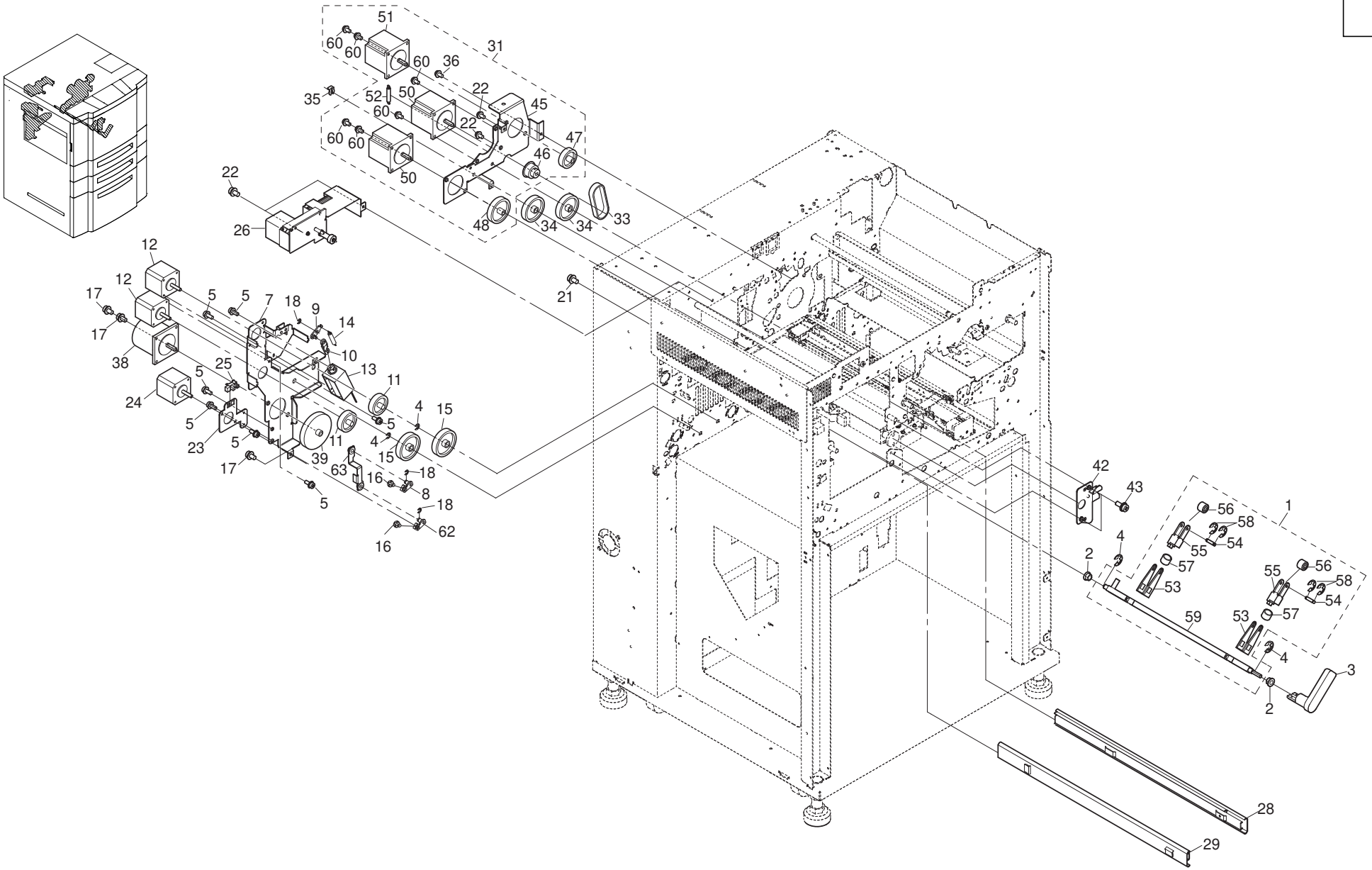

REV.NO.													
PH	Title	Paper Feed Block Ass'y											
	DWG. No.	N517444 - 00											

*1: Do not use this parts for RoHS. *2: Use this parts only for RoHS(From S/N Q47604XXXXX).

*:Recommendable Spare Parts

	No.	Part No.		Part name	Q'ty	Remarks	REV. No.	Part No.		Part name	Q'ty	Remarks	REV. No.	Part No.		Part name	Q'ty	Remarks	REV. No.
	40																		
*	39	G1511059	N328110	SB Motor Gear(92)	1														
*	38	G1511020	N2112192	Stepping Motor 3	1	*1		G1515020	N2112194	Stepping Motor 3	1								
	37																		
	36	G1501027	7007606	M4×8+TP Self-tapping Screw	2														
	35	G1501709	N413005	Hook Ring B	1														
*	34	G1501443	N322790	Idler Gear A	2														
*	33	G1501090	7082372	Timing Belt	1														
	32																		
	31	G1511062	N328412A	PF motor (92) Ass'y	1														
	30																		
*	29	G1501261	N2071464	Slide Rail (3)	1														
*	28	G1501260	N2071463	Slide Rail (3)	1														
	27																		
*	26	G1501303	N212331A	CW Unit Ass'y	1	*1		G1505303	N212331B	CW Unit Ass'y	1								
*	25	G1501098	7390160	Photo Interrupter	1	*1		G1505098	73901602	Photo Interrupter	1								
*	24	G1511019	N2112183	Steppin Motor 2	1	*1		G1515019	N2112186	Steppin Motor 2	1								
	23	G1521206	N423548	SB Gate Motor Holder	1														
	22	G1501160	8065203	M4×8 Pan-head Screw	3														
	21	G1501029	7007608	M4×16+TP Self-tapping Screw	1														
	20																		
	19																		
	18	G1501086	7072025	Retaining Ring-E	3														
	17	G1501027	7007606	M4×8+TP Self-tapping Screw	3														
	16	G1511000	7002225	Hexagonal Socket Bolt	2														
*	15	G1501443	N322790	Idler Gear A	2														
*	14	G1501066	7062119	Extension Spring	1														
*	13	G1501421	N313528	Solenoid A	1	*1		G1505421	N3135282	Solenoid A	1								
*	12	G1511028	N214572	Stepping Motor 40	2	*1		G1515028	N2145722	Stepping Motor 40	2								
*	11	G1501430	N322767	Motor Gear (SB)	2														
	10	G1501655	N328753	Link B(FL)	1														
	9	G1501427	N322763	Gate Link(FL)	1														
	8	G1521203	N423400A	SB Gate Link M Ass'y	1														
	7	G1521045	N105536	SB Drive Holder(92)	1														
	6																		
	5	G1501153	8065102	M3×6 Pan-head Screw	10														
	4	G1501081	7072004	Retaining Ring-E	4														
	3	G1501632	N326146A	TH Handle Ass'y	1														
*	2	G1501047	7044031	Sleeve Bearing	2														
	1	G1501509	N323107A	Retract Shaft Ass'y	1														

Parts list No.	N517445-01 (1/2)	REV. No.		DATE	06 3

Block	PH	Title	Paper Feed Block Ass'y
		DWG.No.	N517444-00

Parts list No.	N517445-01 (2/2)	REV. No.	
		DATE	06.3

Block	PH	Title	Paper Feed Block Ass'y	9
		DWG.No	N517444-00	

	No.	Part No.		Part name	Q'ty	Remarks	REV. No.	Part No.		Part name	Q'ty	Remarks	REV. No.	Part No.		Part name	Q'ty	Remarks	REV. No.
	80																		
	79																		
	78																		
	77																		
	76																		
	75																		
	74																		
	73																		
	72																		
	71																		
	70																		
	69																		
	68																		
	67																		
	66																		
	65																		
	64																		
*	63	G1521205	N423547A	Gate Link SB(M) B Ass'y	1														
	62	G1521204	N423400B	SB Gate Link M Ass'y	1														
	61																		
	60	G1501162	8065205	M4×12 Pan-head Screw	4														
	59	G1501462	N322871	Retract Shaft	1														
	58	G1501085	7072024	Retaining Ring-E	4														
*	57	G1501061	7061166	Compression Spring	2														
	56	G1501741	N419971	Retract Roller	2														
	55	G1501759	N420102	Retract Spring Guide	2														
	54	G1501758	N420100	Retract Roller Shaft	2														
	53	G1501463	N322872	Retract Arm	2														
*	52	G1511001	7062093	Extension Spring	1														
*	51	G1511025	N2133193	Stepping Motor 8	1	*1		G1515025	N2133196	Stepping Motor 8	1								
*	50	G1511020	N2112192	Stepping Motor 3	2	*1		G1515020	N2112194	Stepping Motor 3	2								
	49																		
*	48	G1511060	N328111	RTN Motor Gear (92)	1														
*	47	G1511064	N329431	Drive Gear (92)	1														
*	46	G1501454	N322837	Drive Pulley 1 (A)	1														
	45	G1511061	N328112A	Motor Base (92) Ass'y	1														
	44	G1501155	8065104	M3×10 Pan-head Screw	2														
	43	G1501162	8065205	M4×12 Pan-head Screw	2														
	42	G1501807	N421038A	TH Hinge Plate Ass'y	1														
	41																		

*1: Do not use this parts for RoHS. *2: Use this parts only for RoHS(From S/N Q47604XXXXX).

*:Recommendable Spare Parts

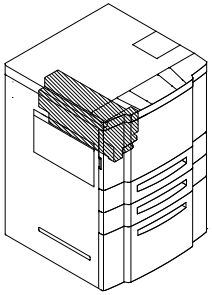

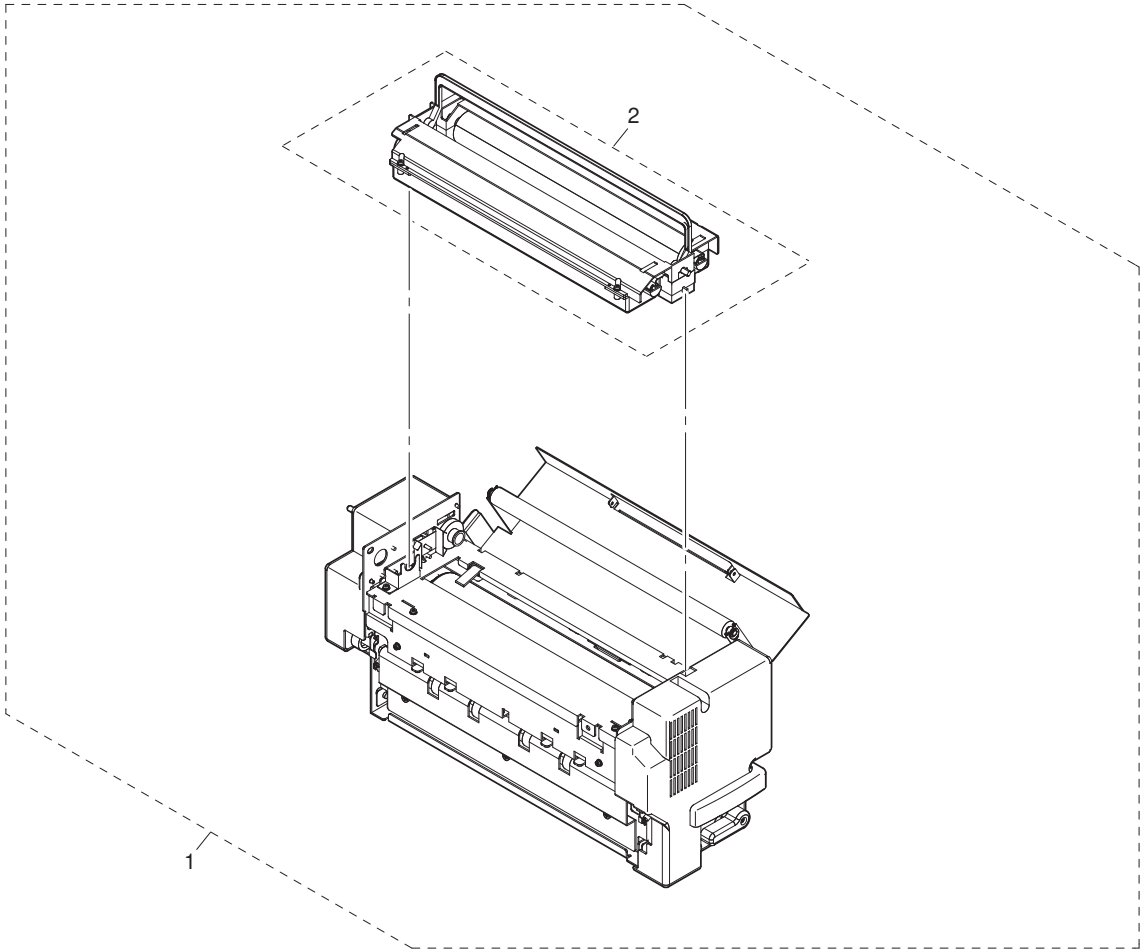

REV.NO.													
PHF	Title	Fuser Unit Ass'y											
	DWG. No.	N517446 - 00											

*1: Do not use this parts for RoHS. *2: Use this parts only for RoHS(From S/N Q47604XXXXX).

*:Recommendable Spare Parts

No.	Part No.		Part name	Q'ty	Remarks	REV. No.	Part No.		Part name	Q'ty	Remarks	REV. No.	Part No.		Part name	Q'ty	Remarks	REV. No.
40																		
39																		
38																		
37																		
36																		
35																		
34																		
33																		
32																		
31																		
30																		
29																		
28																		
27																		
26																		
25																		
24																		
23																		
22																		
21																		
20																		
19																		
18																		
17																		
16																		
15																		
14																		
13																		
12																		
11																		
10																		
9																		
8																		
7																		
6																		
5																		
4																		
3																		
2	G1501310	N212407L	Fuser Cleaning Web DDP70/92/184	1														
1	G1511063	N329396A	Fuser Unit	1	*1		G1515063	N337007A	Fuser Unit	1								

Parts list No.	N517447-01 (1/1)	REV. No.																
		DATE	06 3															

Block	PHF	Title	Fuser Unit Ass'y
		DWG.No	N517446-00

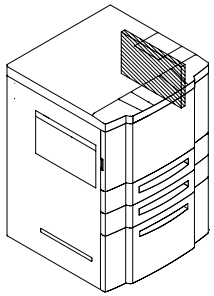

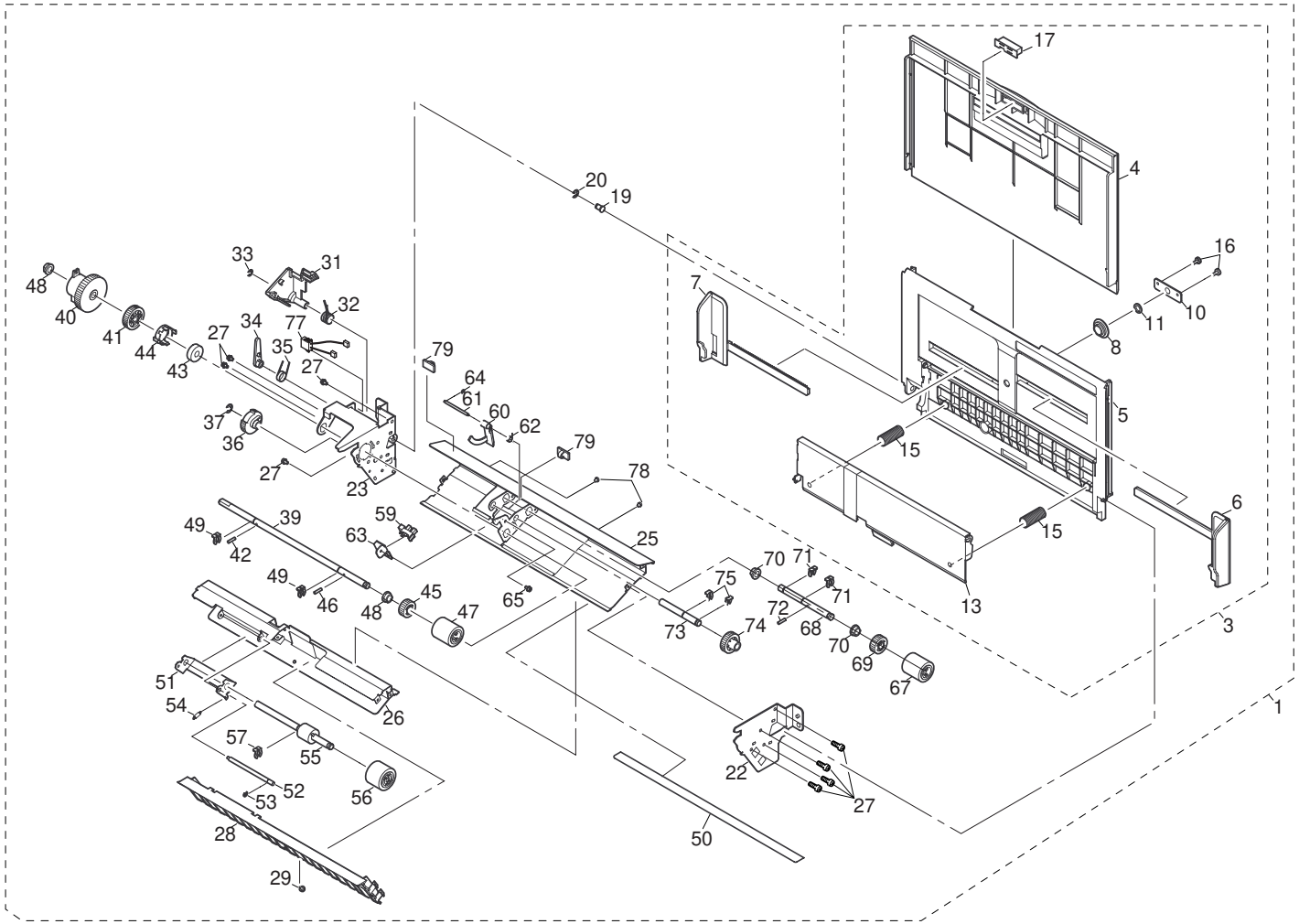

REV.NO.													
PHM	Title	Multi-Bypass Feeder Ass'y											
	DWG. No.	N517448 - 00											

*1: Do not use this parts for RoHS. *2: Use this parts only for RoHS(From S/N Q47604XXXXX).

*:Recommendable Spare Parts

	No.	Part No.		Part name	Q'ty	Remarks	REV. No.	Part No.		Part name	Q'ty	Remarks	REV. No.	Part No.		Part name	Q'ty	Remarks	REV. No.
*	40	G1501386	N213593	Pick Clutch 47	1	*1		G1505386	N2135932	Pick Clutch 47	1								
	39	G1501502	N323035	Drive Shaft	1														
	38																		
	37	G1501082	7072005	Retaining Ring-E	1														
*	36	G1501290	N212165	Cam Gear	1														
	35	G1501500	N3230332	Twisted Coil Spring	1														
	34	G1501501	N323034	Arm	1														
	33	G1501080	7072003	Retaining Ring-E	1														
	32	G1501499	N323033	Twisted Coil Spring	1														
	31	G1501289	N212164	Triangle Arm	1														
	30																		
	29	G1501153	8065102	M3×6 Screw	1														
	28	G1501882	N218616A	Guide Frame Rework	1														
	27	G1501153	8065102	M3×6 Screw	8														
	26	G1501288	N212163	Lower Guide	1														
	25	G1501212	N104555	Upper Guide	1														
	24																		
	23	G1501498	N323032A	Chassis R Ass'y	1														
	22	G1501286	N212161	Chassis L	1														
	21																		
	20	G1501081	7072004	Retaining Ring-E	1														
	19	G1501784	N420712	Hinge Shaft	1														
	18																		
	17	G1501120	7871106	Magnet Catch	1														
	16	G1501024	7007568	M3×8 Tapping Screw	2														
	15	G1501059	7061135	Compression Spring	2														
	14																		
	13	G1501609	N325453B	Paper Tray Ass'y	1														
	12																		
	11	G1501863	N424140	Paper Guide Spring	1														
	10	G1501497	N323031	Rack Holder	1														
	9																		
*	8	G1501285	N212160	Pinion Gear	1														
	7	G1501211	N104552	Paper Guide R	1														
	6	G1501210	N104551	Paper Guide L	1														
	5	G1501610	N325454A	Inner Door Ass'y	1														
	4	G1501209	N104550	Outer Door	1														
	3	G1501332	N212726A	Door Ass'y	1														
	2																		
	1	G1501881	N104757G	Multi-bypass Feeder Ass'y	1	*1		G1505881	N104757J	Multi-bypass Feeder Ass'y	1								

Parts list No.	N517449-01 (1/2)	REV. No.		DATE	06 3

Block	PHM	Title	Multi-Bypass Feeder Ass'y
		DWG.No.	N517448-00

Parts list No.	N517449-01 (2/2)	REV. No.		DATE	06 3

Block	PHM	Title	Multi-Bypass Feeder Ass'y	11
		DWG.No.	N517448-00	

No.	Part No.		Part name	Q'ty	Remarks	REV. No.	Part No.		Part name	Q'ty	Remarks	REV. No.	Part No.		Part name	Q'ty	Remarks	REV. No.
80																		
79	G1501122	7903142	Code Keeper	2														
78	G1501094	7086082	Rubber Cushion	2														
77	G1501561	N324379	MB Tray Sensor Cable Ass'y	1														
76																		
* 75	G1501709	N413005	Hook Ring B	2														
* 74	G1501438	N322779	Pick Idler Gear	1														
73	G1501779	N420448	Idler Gear Shaft	1														
72	G1501149	8021048	D3×14 Pin	1														
* 71	G1501708	N413004	Hook Ring A	2														
* 70	G1501045	7044020	Sleeve Bearing	2														
* 69	G1501460	N322865	Pick Roller Gear	1														
68	G1501726	N419904	Pick Roller Shaft	1														
* 67	G1501550	N3242852	Pick Roller	1														
66																		
65	G1501153	8065102	M3×6 Screw	1														
64	G1501078	7072001	Retaining Ring-E	1														
63	G1501756	N420078	Sensor Bracket	1														
62	G1501757	N420095	Sensor Spring	1														
61	G1501778	N420447	Sensor Lever Shaft	1														
* 60	G1501505	N323038	Sensor Lever	1														
* 59	G1501099	7390161	Photo Interrupter	1	*1		G1505099	73901612	Photo Interrupter	1								
58																		
* 57	G1501708	N413004	Hook Ring A	1														
* 56	G1501551	N324286	Separate Roller	1														
* 55	G1501633	N326183	Torque Limiter 2	1	*1		G1505633	N3261832	Torque Limiter 2	1								
54	G1501062	7062065	Tension Coil Spring	1														
53	G1501079	7072002	Retaining Ring-E	1														
52	G1501755	N420077	Holder Shaft	1														
51	G1501504	N323037	Separation Holder	1														
50	G1501665	N330196	Upper Guide Sheet	1														
* 49	G1501708	N413004	Hook Ring A	2														
* 48	G1501045	7044020	Sleeve Bearing	2														
* 47	G1501550	N3242852	Pick Roller	1														
46	G1501148	80210475	D3×12 Pin	1														
* 45	G1501461	N322866	Pick Drive Gear	1														
* 44	G1501440	N322782	B.B Housing	1														
* 43	G1501164	81005213	B.B	1														
42	G1501148	80210475	D3×12 Pin	1														
* 41	G1501503	N323036	Gear A	1														

*1: Do not use this parts for RoHS. *2: Use this parts only for RoHS(From S/N Q47604XXXXX).

*:Recommendable Spare Parts

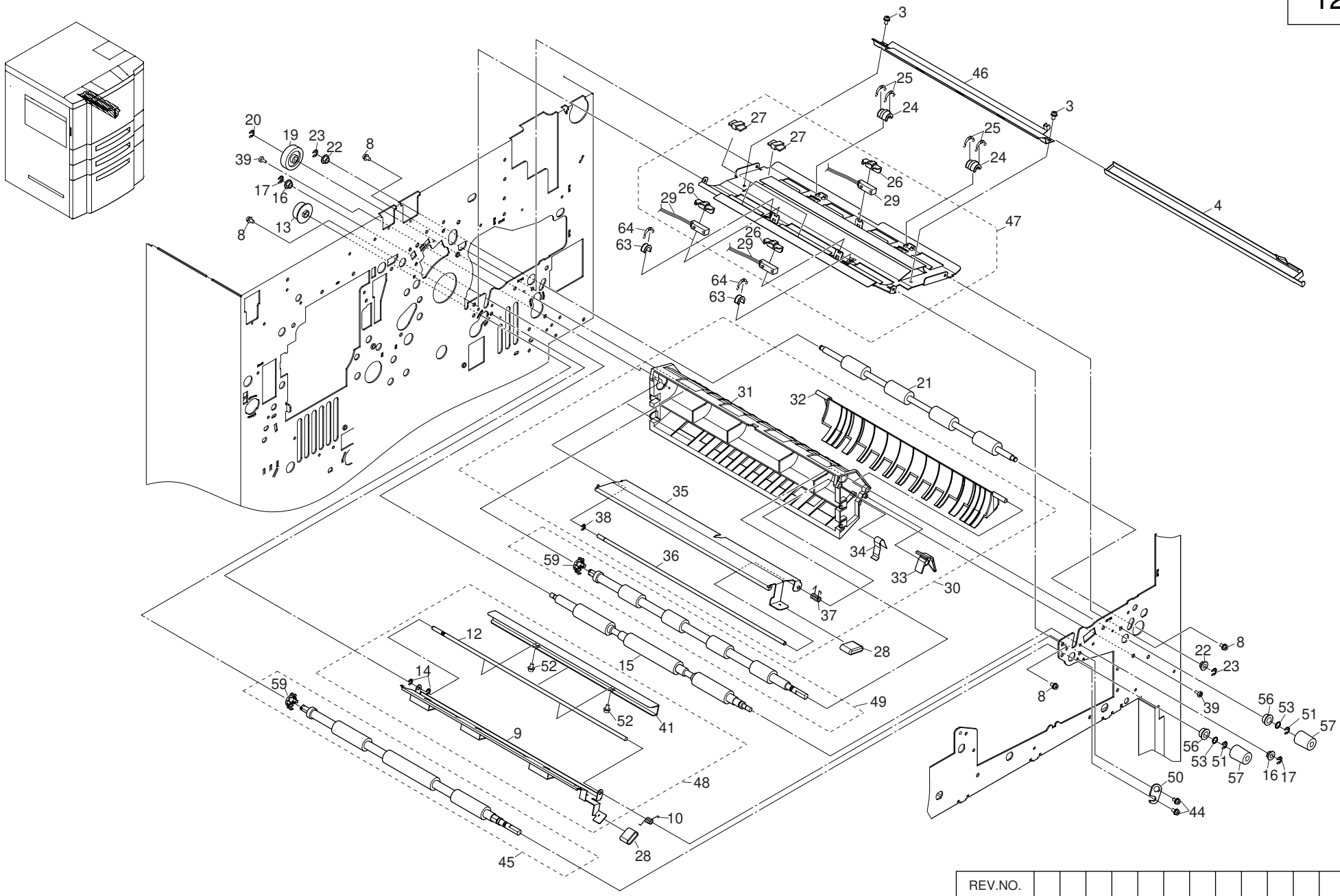

REV.NO.													
PHR	Title	Resist Ass'y											
	DWG. No.	N517450 - 00											

*1: Do not use this parts for RoHS. *2: Use this parts only for RoHS(From S/N Q47604XXXXX).

*:Recommendable Spare Parts

No.	Part No.		Part name	Q'ty	Remarks	REV. No.	Part No.		Part name	Q'ty	Remarks	REV. No.	Part No.		Part name	Q'ty	Remarks	REV. No.
40																		
39	G1501024	7007568	M3×8 Tap Screw	2														
38	G1501085	7072024	Retaining Ring-E	1														
37	G1501837	N422253	Hinge Spring A	1														
36	G1501839	N422255	Hinge Shaft A	1														
35	G1501389	N213758	Low Paper Guide (1)	1														
34	G1501781	N420604	Arm Spring (1)	1														
33	G1501441	N322783	Hinge Arm	1														
32	G1501195	N104490	Inner Paper Guide	1														
31	G1501205	N104514	Paper Guide Stay	1														
30	G1511096	N104772C	Paper Guide Stay Ass'y	1														
* 29	G1501100	7393010	Photo Sensor	3	*1		G1505100	73930102	Photo Sensor	3								
* 28	G1501544	N324150	PHD Knob	2														
27	G1501122	7903142	Code Keep	3														
* 26	G1501344	N212799	Sensor Holder	3														
* 25	G1501713	N414185	Timing Roller SP	4														
* 24	G1501415	N312327	Spring Holder	2														
23	G1501086	7072025	Retaining Ring-E	2														
* 22	G1501046	7044030	Sleeve Bearing	2														
* 21	G1501674	N330444A	Timing Pressure Roller Ass'y	1														
20	G1501087	7072026	Retaining Ring-E	1														
* 19	G1501459	N322862	Drive Gear (D)	1														
18																		
17	G1501086	7072025	Retaining Ring-E	2														
* 16	G1501046	7044030	Sleeve Bearing	4														
* 15	G1501435	N3227722	Resist Pressure Roller	1	*1		G1505435	N3227723	Resist Pressure Roller	1								
14	G1501085	7072024	Retaining Ring-E	2														
* 13	G1501458	N322860	Drive Pully	1														
12	G1501880	N423449	Hinge Shaft B2	1														
11																		
10	G1501838	N422254	Hinge Spring B	1														
9	G1501387	N213599	Low Paper Guide (A)	1														
8	G1501160	8065203	M4×8 Screw	4														
7																		
6																		
5																		
4	G1511048	N324464	Cleaner Holder Ass'y	1														
3	G1501160	8065203	M4×8 Screw	2														
2																		
1																		

Parts list No.	N517451-01 (1/2)	REV. No.	/															
		DATE	06 3															

Block	PHR	Title	Resist Ass'y
		DWG.No.	N517450-00

Parts list No.	N517451-01 (2/2)	REV. No.		DATE	06 3

Block	PHR	Title	Resist Ass'y
		DWG.No.	N517450-00

No.	Part No.		Part name	Q'ty	Remarks	REV. No.	Part No.		Part name	Q'ty	Remarks	REV. No.	Part No.		Part name	Q'ty	Remarks	REV. No.
80																		
79																		
78																		
77																		
76																		
75																		
74																		
73																		
72																		
71																		
70																		
69																		
68																		
67																		
66																		
65																		
*64	G1501836	N422149	Roller Spring	2														
*63	G1501859	N423736	Spring Holder (R)	2														
62																		
61																		
60																		
*59	G1501485	N322976	BB Housing (t1.6)	2														
58																		
*57	G1501587	N324871	Feed Roller Knob	2														
*56	G1501039	7040081	B.B	2														
55																		
54																		
53	G1501002	488582	Poly slider	2														
52	G1501010	70033085	M3×8 Phillps Binding Screw	2														
51	G1501087	7072026	Retaining Ring-E	2														
50	G1501850	N423450	Hinge Plate	1	*1		G1505850	N423450	Hinge Plate	1								
*49	G1501526	N323363A	Timing Drive Roller Ass'y	1	*1		G1505526	N323363C	Timing Drive Roller Ass'y	1								
48	G1511098	N327983C	Low Paper Guide (A) Ass'y	1														
47	G1511026	N213538E	Upper Paper Guide Ass'y	1	*1		G1515026	N213538E	Upper Paper Guide Ass'y	1								
46	G1511054	N325984	Cleaner Holder Base Ass'y	1	*1		G1505628	N325984A	Cleaner Holder Base Ass'y	1								
*45	G1501525	N323362A	Resist Roller Ass'y	1	*1		G1505525	N323362B	Resist Roller Ass'y	1								
44	G1501154	8065103	M3×8 Screw	2														
43																		
42																		
41	G1501851	N332857A	S Paper Guide Ass'y(2)	1														

*1: Do not use this parts for RoHS. *2: Use this parts only for RoHS(From S/N Q47604XXXXX).

*:Recommendable Spare Parts

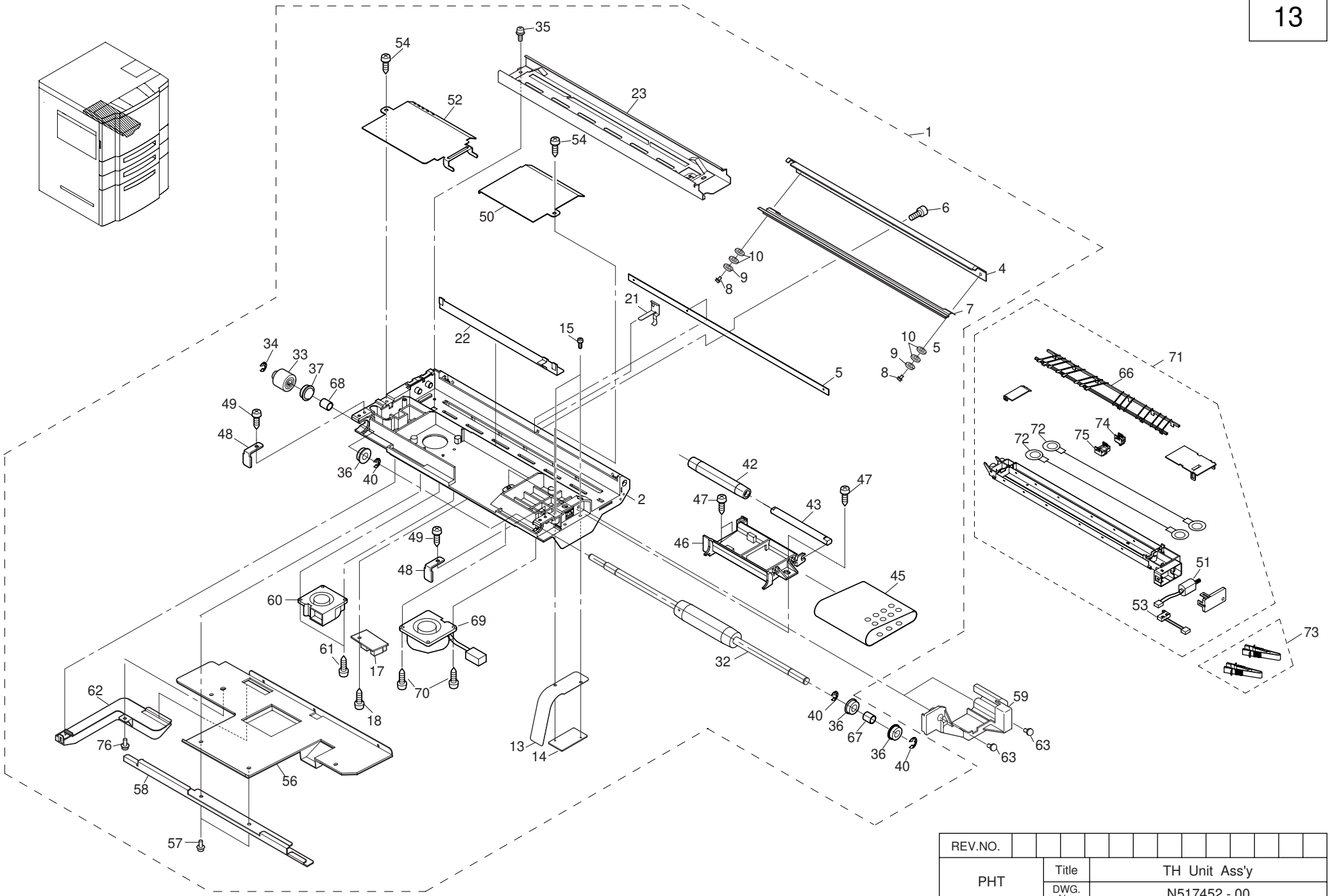

REV.NO.		
PHT	Title	TH Unit Ass'y
	DWG. No.	N517452 - 00

*1: Do not use this parts for RoHS. *2: Use this parts only for RoHS(From S/N Q47604XXXXX).

*:Recommendable Spare Parts

	No.	Part No.		Part name	Q'ty	Remarks	REV. No.	Part No.		Part name	Q'ty	Remarks	REV. No.	Part No.		Part name	Q'ty	Remarks	REV. No.
	40	G1501089	7072028	Retaining Ring-E	3														
	39																		
	38																		
*	37	G1501041	7040201	B.B	1														
*	36	G1501707	N409855	Flange Bearing	3														
	35	G1501154	8065103	Screw, M3×8 Pan Hd. Phillips	1														
	34	G1501085	7072024	Retaining Ring-E	1														
*	33	G1501474	N322888	TH Drive Gear	1														
	32	G1501678	N330713	TH Drive Shaft (R)	1	UNIT REV S													
	31																		
	30																		
	29																		
	28																		
	27																		
	26																		
	25																		
	24																		
	23	G1501302	N212321B	Guide Plate W Ass'y	1														
	22	G1501346	N212808	TH Earth Plate (1)	1														
	21	G1501822	N421339	TH Earth Plate (3)	1														
	20																		
	19																		
	18	G1501021	7007561	M3X6 Tap Screw	1														
*	17	G1501104	7395057	Temperature Humidity Sensor	1	*1		G1505104	73950572	Temperature Humidity Sensor	1								
	16																		
	15	G1501154	8065103	Screw, M3×8 Pan Hd. Phillips	2														
	14	G1501849	N423002	Nut Plate	1														
	13	G1501848	N423001	Balance Spring	1														
	12																		
	11																		
	10	G1501143	80200035	D3 Washer	4														
	9	G1501133	80112012	D3 Spring Washer	2														
	8	G1501138	80151755	Screw, M3×4 Pan Hd. Phillips	2														
*	7	G1501391	N213996B	Nip Guide Plate W Ass'y (2)	1														
	6	G1501006	7002226	HEX Socket Bolt	1														
	5	G1501611	N325497	TR nut Plate	1	*1		G1505611	N325497	TR nut Plate	1								
	4	G1501602	N325425	TR Guide (3)	1														
	3																		
	2	G1501320	N212577A	TH Frame Ass'y	1														
*	1	G1511095A	N104760I	TH Unit Ass'y	1	*1		G1515095	N104760U	TH Unit Ass'y	1			G1515095A	N104760U	TH Unit Ass'y	1		

Parts list No.	N517453-03 (1/2)	REV. No.				DATE	06 3	08 1

Block	PHT	Title	TH Unit Ass'y
		DWG.N	N517452-02

Parts list No.	N517453-03 (2/2)	REV. No.			DATE	06-3	06-4

Block	PHT	Title	TH Unit Ass'y	13
		DWG.N	N517452-00	

No.	Part No.		Part name	Q'ty	Remarks	REV. No.	Part No.		Part name	Q'ty	Remarks	REV. No.	Part No.		Part name	Q'ty	Remarks	REV. No.
80																		
79	G1501796	N420883	TR Earth Cable Ass'y	1														
78	G1501795	N420882	TR Cable Ass'y	1	*1		G1505795	N4208822	TR Cable Ass'y	1								
77	G1501794	N420881	DT Cable Ass'y	1	*1		G1505794	N4208812	DT Cable Ass'y	1								
76	G1501026	7007600	M3×8 Tap Screw	1														
* 75	G1501830	N421609B	Separating Corona Unit Cleaner	1			G1502045	N421609D	Separating Corona Unit Cleaner	1								
* 74	G1501829	N421608B	Transfer Corona Unit Cleaner	1			G1502044	N421608D	Transfer Corona Unit Cleaner	1								
* 73	G1501426	N320426A	Charger Cleaner Kit	1														
* 72	G1501453	N3228303	Corotron Wire	2														
* 71	G1501291	N212169A	Corotron Ass'y	1	*1		G1505291	N219514A	Corotron Ass'y	1								
70	G1501024	7007568	M3×8 Tap Screw	2														
* 69	G1501117	7810160	DC Fan	1	*1		G1505117	78101602	DC Fan	1								
68	G1501805	N4210312	TH Spacer	1														
67	G1501804	N421031	TH Spacer	1														
* 66	G1511308	N212066	Detouch Guide	1														
65	G1511077	N330446	TH Cable Ass'y (2)	1														
64																		
63	G1501155	8065104	Screw, M3×10 Pan Hd. Phillips	2														
62	G1501619	N325708A	TH Duct Ass'y	1														
61	G1501024	7007568	M3×8 Tap Screw	2														
* 60	G1501780	N420484A	Fan Ass'y	1	*1		G1505780	N420484B	Fan Ass'y	1								
59	G1501382	N213492	TH Cable Cover	1														
58	G1501352	N213035	Frame Support	1														
57	G1501020	7007560	M4×10 Tap Screw	4														
56	G1511097	N212806B	Fan Base Ass'y	1														
55																		
54	G1501020	7007560	M4×10 Tap Screw	2														
* 53	G1501627	N325975	Sensor Ass'y	1	*1		G1505627	N3259752	Sensor Ass'y	1								
52	G1501596	N325267A	Paper Guide (R) Ass'y	1														
* 51	G1501626	N325974	DC Motor Ass'y	1	*1		G1505626	N3259742	DC Motor Ass'y	1								
50	G1501595	N325144A	Paper Guide (F) Ass'y	1														
49	G1501020	7007560	M4×10 Tap Screw	2														
48	G1501802	N4210152	BB Stopper	2	*1		G1505802	N4210152	BB Stopper	2								
47	G1501020	7007560	M4×10 Tap Screw	3														
46	G1501353	N213125A	TH Belt Frame Ass'y	1														
* 45	G1501452	N322824	TH Belt	1														
44																		
43	G1501736	N419951	TH Idler Shaft	1														
42	G1501451	N322823	TH Belt Pully (1)	1														
41																		

*1: Do not use this parts for RoHS. *2: Use this parts only for RoHS(From S/N Q47604XXXXX).

*:Recommendable Spare Parts

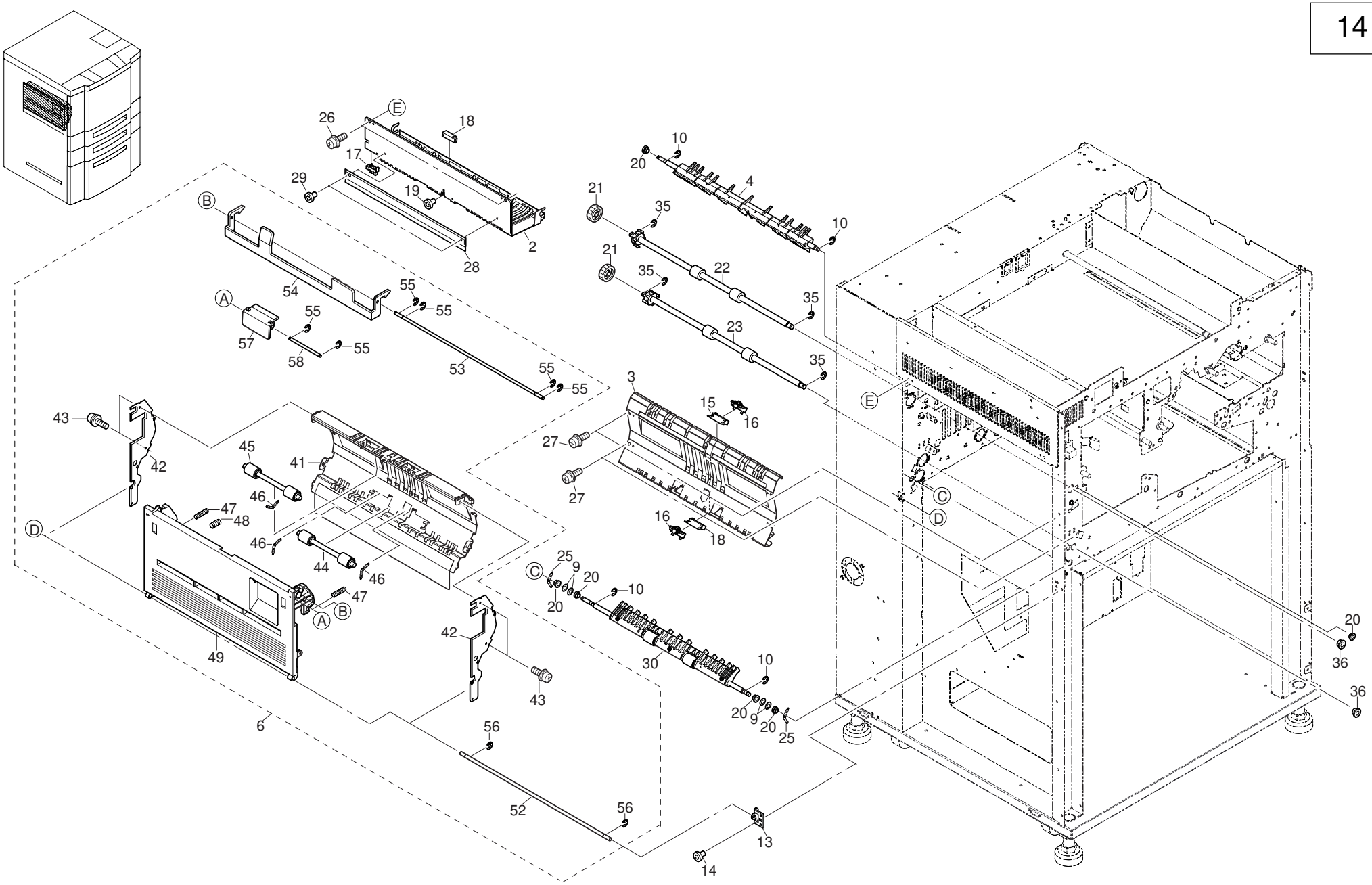

REV.NO.													
PHS	Title	Switch Back Ass'y											
	DWG. No.	N517454 - 00											

*1: Do not use this parts for RoHS. *2: Use this parts only for RoHS(From S/N Q47604XXXXX).

*:Recommendable Spare Parts

No.	Part No.		Part name	Q'ty	Remarks	REV. No.	Part No.		Part name	Q'ty	Remarks	REV. No.	Part No.		Part name	Q'ty	Remarks	REV. No.
40																		
39																		
38																		
37																		
* 36	G1501047	7044031	Sleeve Bearing	2														
35	G1501086	7072025	Retaining Ring-E	4														
34																		
33																		
32																		
31																		
* 30	G1501321	N212605A	SB Gate Ass'y	1	*1		G1505321	N212605C	SB Gate Ass'y	1								
29	G1501010	70033085	M3×8 Bind Screw	2														
* 28	G1501132	7940130	Electrostatic Eraser	1														
27	G1501160	8065203	M4×8 Pan Head Screw	6														
26																		
* 25	G1501063	7062075	Extension Spring	2														
24																		
* 23	G1501535	N323881B	Paper Feed Roller Ass'y	1		01												
* 22	G1501534	N323881A	Paper Feed Roller Ass'y	1		01												
* 21	G1501429	N322766	Drive Roller Gear (SB)	2														
* 20	G1501046	7044030	Sleeve Bearing	6														
19	G1501011	70033125	M3×12 Bind Screw	1														
* 18	G1501100	7393010	Photo Sensor	2	*1		G1505100	73930102	Photo Sensor	2								
* 17	G1501099	7390161	Photo Interrupter	1	*1		G1505099	73901612	Photo Interrupter	1								
* 16	G1501344	N212799	Sensor Holder	2														
* 15	G1501101	7393011	Photo Sensor	1	*1		G1505101	73930112	Photo Sensor	1								
14	G1501027	7007606	M4×8 Self-tapping Screw	1														
13	G1501722	N419892	SB Cover Pin Holder	1														
12																		
11																		
10	G1501084	7072023	Retaining Ring-E	4	*1		G1505084	7072023	Retaining Ring-E	4								
9	G1501145	80202085	D6 Bolt-washer	4														
8																		
7																		
6	G1501181	N000602C	SB Paper Guide (O) Ass'y	1														
5																		
4	G1501401	N215248A	Flip Gate Ass'y	1														
3	G1511052	N325295B	SB Paper Guide (IN) W Ass'y	1														
2	G1511015	N105806	Upper SB Paper Guide(2)	1														
1																		

Parts list No.	N517455-01 (1/2)	REV. No.	/	DATE	06 3

Block	PHS	Title	Switch Back Ass'y
		DWG.No	N517454-00

Parts list No.	N517455-01 (2/2)	REV. No.		DATE	06 3

Block	PHS	Title	Switch Back Ass'y
		DWG.No	N517454-00

No.	Part No.		Part name	Q'ty	Remarks	REV. No.	Part No.		Part name	Q'ty	Remarks	REV. No.	Part No.		Part name	Q'ty	Remarks	REV. No.
80																		
79																		
78																		
77																		
76																		
75																		
74																		
73																		
72																		
71																		
70																		
69																		
68																		
67																		
66																		
65																		
64																		
63																		
62																		
61																		
60																		
59																		
58	G1501806	N421036	SB Cover Lever Shaft	1														
57	G1501378	N213479	SB Cover Lever	1														
56	G1501081	7072004	Retaining Ring-E	2														
55	G1501080	7072003	Retaining Ring-E	6														
54	G1501264	N212037	SB Cover Latch	1														
53	G1501720	N419889	SB Cover Latch Shaft	1														
52	G1501721	N419891	SB Cover Shaft	1														
51																		
50																		
49	G1501165	N000509	SB Cover	1														
* 48	G1501058	7061120	Compression Spring	1														
* 47	G1501056	7061085	Compression Spring	2														
* 46	G1501836	N422149	Roller Spring	3														
* 45	G1501432	N322769B	Pressure Roll Ass'y	1	*1		G1505432	N322769E	Pressure Roll Ass'y	1								
* 44	G1501431	N322769A	Pressure Roll Ass'y	1	*1		G1505431	N322769D	Pressure Roll Ass'y	1								
43	G1501156	8065105	M3×12 Pan Head Screw	4														
42	G1501428	N322765	SB Paper Guide S Plate	2														
41	G1501884	N330610B	SBPG(0) SUB Ass'y	1														

*1: Do not use this parts for RoHS. *2: Use this parts only for RoHS(From S/N Q47604XXXXX).

*:Recommendable Spare Parts

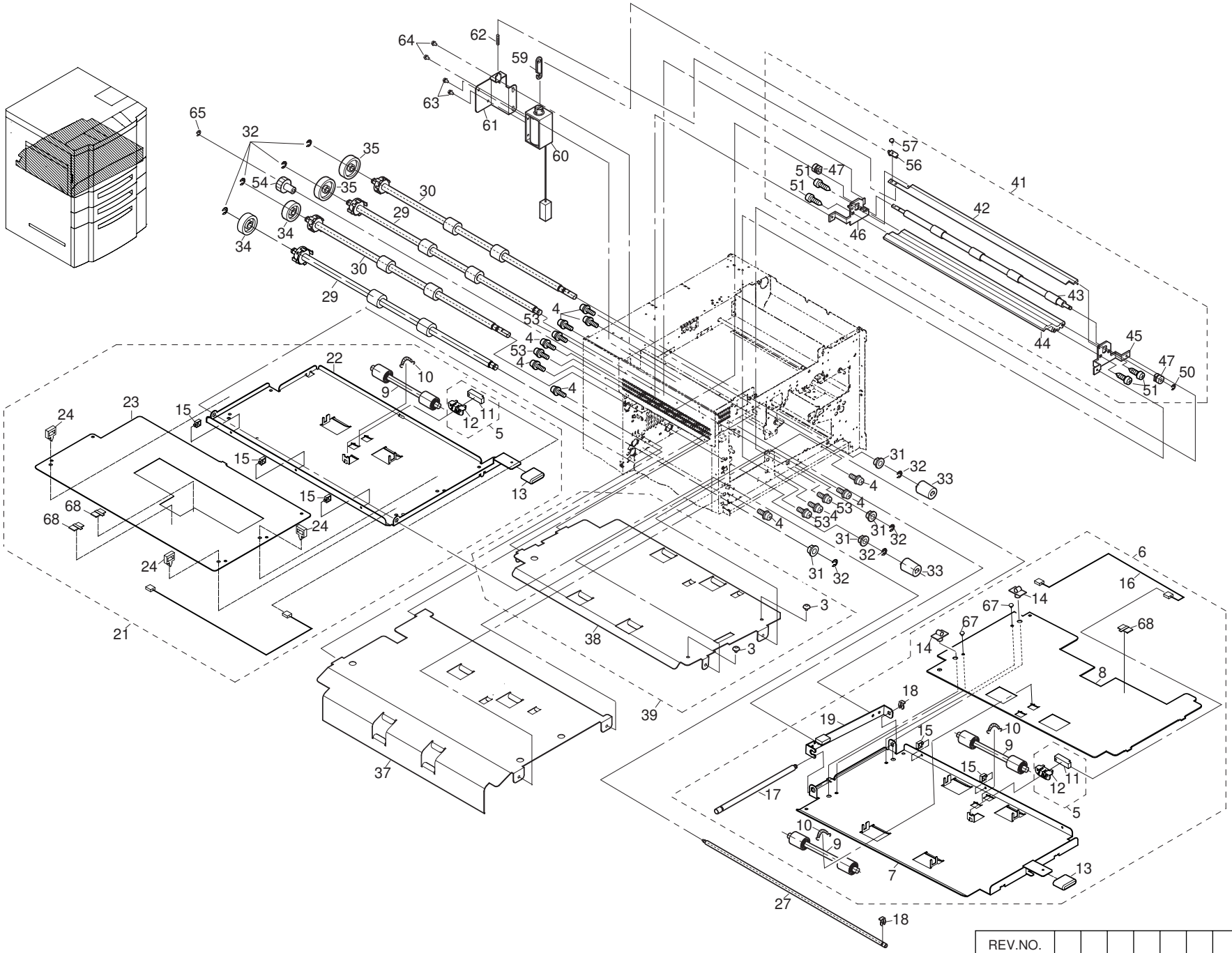

REV.NO.		
PHD	Title	Duplex Path Ass'y
	DWG. No.	N517456 - 00

*1: Do not use this parts for RoHS. *2: Use this parts only for RoHS(From S/N Q47604XXXXX).

*:Recommendable Spare Parts

No.	Part No.		Part name	Q'ty	Remarks	REV. No.	Part No.		Part name	Q'ty	Remarks	REV. No.	Part No.		Part name	Q'ty	Remarks	REV. No.
40																		
39	G1501638	N327023A	L Paper Guide 2 Ass'y	1														
38	G1501245	N105025	L Paper Guide 2	1														
37	G1501244	N105024	L Paper Guide 1	1														
36																		
* 35	G1501545	N324151	Drive Roller Gear (DPX)	2														
* 34	G1501429	N322766	Drive Roller Gear (SB)	2														
* 33	G1501587	N324871	Feed Roller Knob	2														
32	G1501086	7072025	Retaining Ring-E	8														
* 31	G1501047	7044031	Sleeve Bearing	4														
* 30	G1501524	N323317A	Paper Feed Roller Ass'y	2														
* 29	G1501534	N323881A	Paper Feed Roller Ass'y	2														
28																		
27	G1501718	N419832	Hinge Shaft (L)	1														
26																		
25																		
24	G1501124	7903201	Locking Wire Saddle	3														
23	G1501307	N212356	UP Guide Plate (L)	1														
22	G1501222	N104680	U Paper Guide-L (2)	1														
21	G1501235	N104801A	U Paper Guide (L) Ass'y	1														
20																		
19	G1501846	N422782A	Hinge Plate Ass'y	1														
* 18	G1501709	N413005	Hook Ring B	2														
17	G1501719	N419833	Hinge Shaft (R)	1														
16	G1501801	N420983	RTN Sensor 2 Cable Ass'y	1														
15	G1501125	7903210	Locking Wire Saddle	5														
14	G1501123	7903152	Cable Clamp	2														
* 13	G1501544	N324150	PHD Knob	2														
* 12	G1501344	N212799	Sensor Holder	2														
* 11	G1501100	7393010	Photo Sensor	2	*1		G1505100	73930102	Photo Sensor	2								
* 10	G1501063	7062075	Extension Spring	3														
* 9	G1501431	N322769A	Pressure Roller Ass'y	3	*1		G1505431	N322769D	Pressure Roller Ass'y	3								
8	G1501306	N212355	UP Guide Plate (R)	1														
7	G1501193	N104488	U Paper Guide (R)	1														
6	G1501234	N104800A	U Paper Guide (R) Ass'y	1														
5	G1501817	N421234A	Sensor Ass'y	2	*1		G1505817	N421234D	Sensor Ass'y	2								
4	G1501160	8065203	Screw, M4×8 Pan Hd. Phillips with SW&W	10														
3	G1501095	7086091	Plug Cushion Rubber	2														
2																		
1																		

Parts list No.	N517457-01 (1/2)	REV. No.		DATE	06 3

Block	PHD	Title	Duplex Path Ass'y
		DWG.No	N517456-00

Parts list No.	N517457-01 (2/2)	REV. No.	/														
		DATE	06.3														

Block	PHD	Title	Duplex Path Ass'y	15
		DWG.No	N517456-00	

	No.	Part No.		Part name	Q'ty	Remarks	REV. No.	Part No.		Part name	Q'ty	Remarks	REV. No.	Part No.		Part name	Q'ty	Remarks	REV. No.
	80																		
	79																		
	78																		
	77																		
	76																		
	75																		
	74																		
	73																		
	72																		
	71																		
	70																		
	69																		
	68	G1501122	7903142	Code Keep	3														
	67	G1501052	7047061	Blind Rivet	2														
	66																		
	65	G1501079	7072002	Retaining Ring-E	1														
	64	G1501160	8065203	Screw, M4×8 Pan Hd. Phillips	2														
	63	G1501160	8065203	Screw, M4×8 Pan Hd. Phillips	2														
	62	G1501055	7061062	Compression Spring	1														
	61	G1501605	N325430	Solenoid Holder	1														
*	60	G1501421	N313528	Solenoid A	1	*1		G1505421	N3135282	Solenoid A	1		/						
	59	G1501412	N312071	Gate Link B	1														
	58																		
	57	G1501051	7047054	Rivet	1														
	56	G1501606	N325431	Gate Actuator	1														
	55																		
	54	G1501607	N3254352	Drive Roller Gear (De Curler)	1														
	53	G1501154	8065103	Screw, M3×8 Pan Hd. Phillips with SW&W	4														
	52																		
	51	G1501027	7007606	Tap Screw, M4×8 Pan Hd. Phillips with W	4														
	50	G1501080	7072003	Retaining Ring-E	1														
	49																		
	48																		
*	47	G1501046	7044030	Sleeve Bearing	2														
	46	G1501604	N325429	Chassis R	1														
	45	G1501603	N325428	Chassis L	1														
	44	G1501362	N213243	Lower Paper Guide	1														
*	43	G1501361	N213242	Rubber Roller Shaft	1														
	42	G1501612	N325513A	Gate Ass'y	1														
	41	G1501246	N105028B	De Curler Ass'y	1		R												

*1: Do not use this parts for RoHS. *2: Use this parts only for RoHS(From S/N Q47604XXXXX).

*:Recommendable Spare Parts

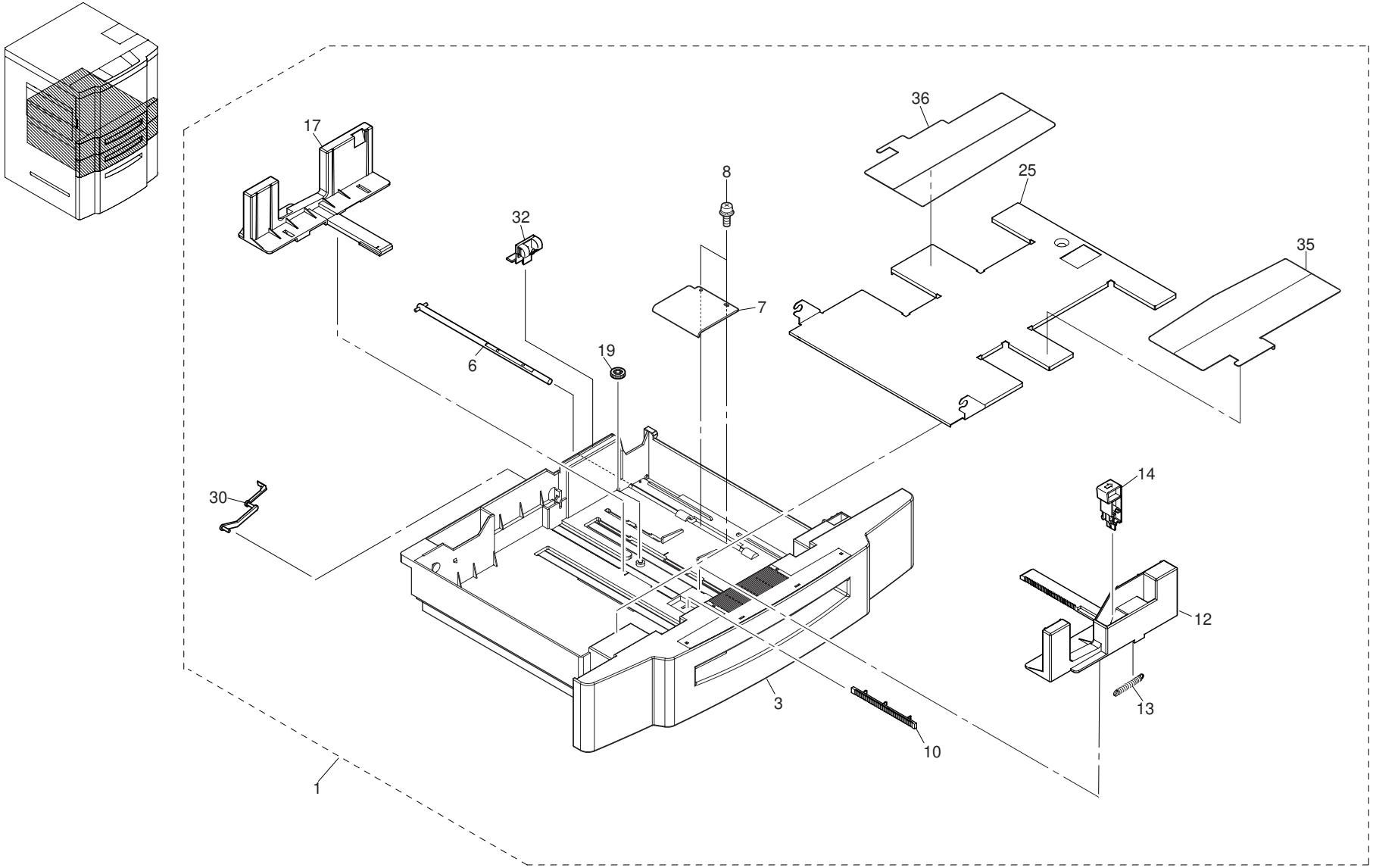

REV.NO.													
PTS	Title	500 Sheet Hopper Ass'y											
	DWG. No.	N517458 - 00											

*1: Do not use this parts for RoHS. *2: Use this parts only for RoHS(From S/N Q47604XXXXX).

*:Recommendable Spare Parts

No.	Part No.		Part name	Q'ty	Remarks	REV. No.	Part No.		Part name	Q'ty	Remarks	REV. No.	Part No.		Part name	Q'ty	Remarks	REV. No.
40																		
39																		
38																		
37																		
36	G1501835	N422013A	Shutter Plate (R) Ass'y	1														
35	G1501834	N422012A	Shutter Plate (F) Ass'y	1														
34																		
33																		
32	G1501272	N212075	Sensor Plate	1														
31																		
30	G1501466	N322879	Sensor Arm	1														
29																		
28																		
27																		
26																		
25	G1501589	N324885A	Hopper Table Ass'y	1														
24																		
23																		
22																		
21																		
20																		
19	G1501468	N322881	Paper Guide Gear	1														
18																		
17	G1501168	N000517	Paper Guide (R)	1														
16																		
15																		
14	G1501273	N212077	Paper Guide Stopper (V)	1														
13	G1501066	7062119	Extension Spring	1														
12	G1501169	N000518	Paper Guide (F)	1														
11																		
10	G1501467	N322880	Paper Guide Stopper (V) S	1														
9																		
8	G1501161	8065204	Screw, M4×10 Pan Hd. Phillips	2														
7	G1501465	N322878	Table Arm	1														
6	G1501814	N421113A	Table Arm Shaft Ass'y	1														
5																		
4																		
3	G1501588	N324884A	Hopper Base Ass'y	1														
2																		
* 1	G1501223	N104702A	500 Sheet Hopper Ass'y	1	*1		G1505223	N104702M	500 Sheet Hopper Ass'y	1								

Parts list No.	N517459-01 (1/1)	REV. No.																	
		DATE	06 3																

Block	PTS	Title	500 Sheet Hopper Ass'y
		DWG.N	N517458-00

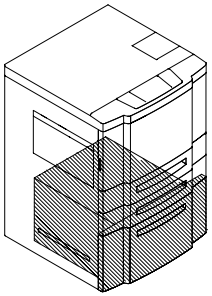

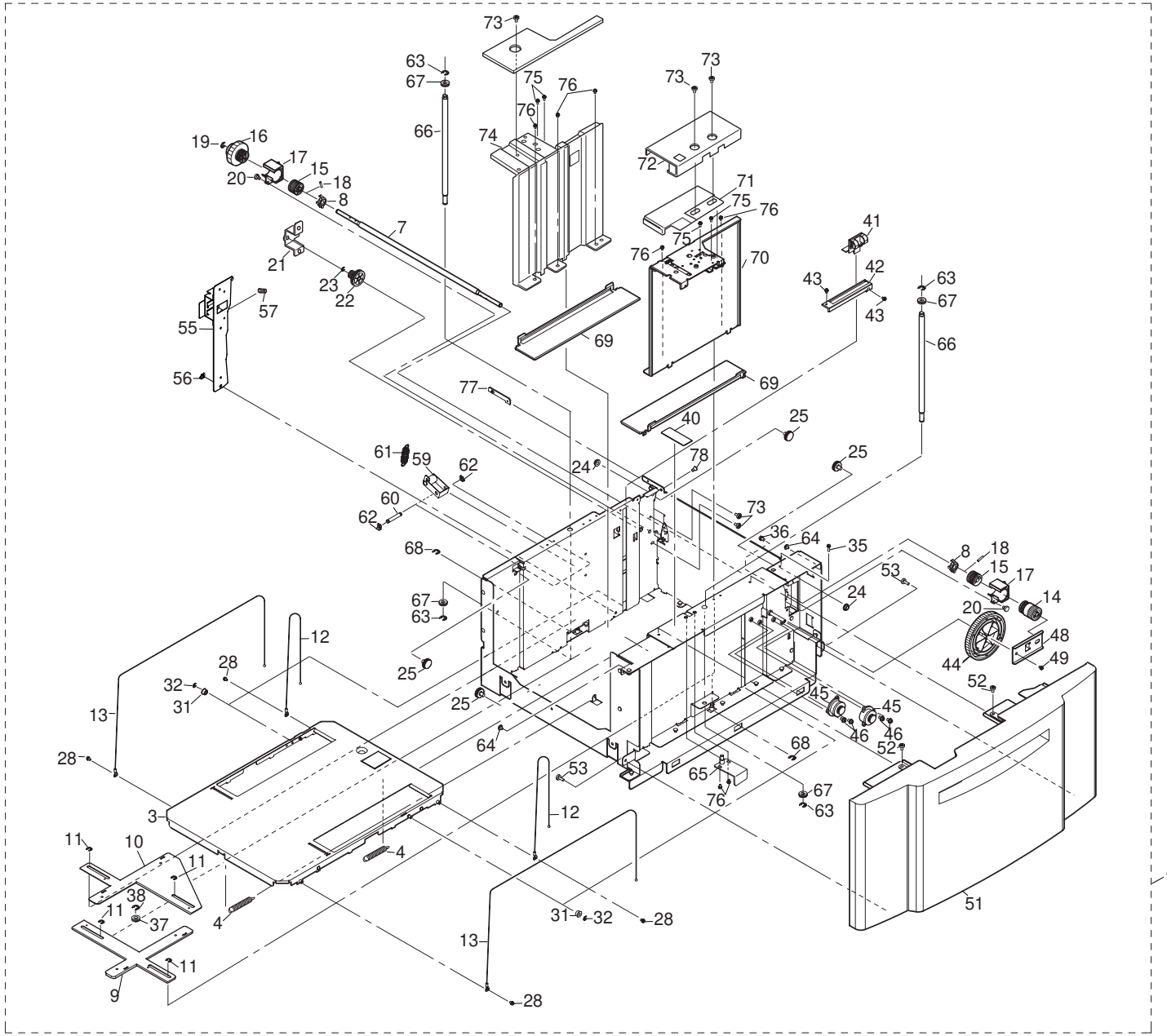

REV.NO.													
PTL	Title	2000 Sheet Hopper Ass'y											
	DWG. No.	N517460 - 00											

*1: Do not use this parts for RoHS. *2: Use this parts only for RoHS(From S/N Q47604XXXXX).

*:Recommendable Spare Parts

No.	Part No.		Part name	Q'ty	Remarks	REV. No.	Part No.		Part name	Q'ty	Remarks	REV. No.	Part No.		Part name	Q'ty	Remarks	REV. No.
40	G1501620	N325712	N.P (Size Guide)	1														
39																		
38	G1501088	7072027	Retaining Ring-E	1														
37	G1501616	N3256022	Pinion	1														
36	G1501160	8065203	Screw, M4×8 Pan Hd. Phillips	1														
35	G1501011	70033125	M3×12 Bind Screw	1														
34																		
33																		
32	G1501085	7072024	Retaining Ring-E	2														
31	G1501790	N420839	Guide Roller	2														
30																		
29																		
28	G1501153	8065102	Screw, M3×6 Pan Hd. Phillips	4														
27																		
26																		
* 25	G1501044	7041345	Derlin Bearing	4														
24	G1501136	80130075	Nut, M6	2														
23	G1501085	7072024	Retaining Ring-E	1														
* 22	G1501482	N322951	Idler Gear	1														
21	G1501618	N325606	Idler Gear Plate	1														
20	G1501001	462228	Sholder Screw	2														
19	G1501087	7072026	Retaining Ring-E	1														
18	G1501149	8021048	D3×14 Pin	2														
17	G1501313	N212437	Pully Cover	2														
16	G1501311	N212416	Drive Gear	1														
15	G1501601	N325307	Drive Drum	2														
14	G1501354	N213146	Drive Gear 2	1														
* 13	G1501481	N3229492	Wire	2	*1		G1505481	N32294922	Wire	2								
* 12	G1501480	N322949	Wire	2	*1		G1505480	N32294921	Wire	2								
11	G1501086	7072025	Retaining Ring-E	4														
10	G1501370	N213334	Rack Slider R	1														
9	G1501369	N213333	Rack Slider F	1														
* 8	G1501714	N414208A	B.B Ass'y	2														
7	G1501479	N322946	Drive Shaft	1														
6																		
5																		
4	G1501782	N420646	Spring T	2														
3	G1501249	N105056A	Table Ass'y 2	1														
2	G1501248	N105055A	Hopper Frame Ass'y 2	1														
* 1	G1501188	N000837A	2000 Sheet Hopper Ass'y 2	1	*1		G1505188	N000837H	2000 Sheet Hopper Ass'y 2	1								

Parts list No.	N517461-01 (1/2)	REV. No.		DATE	06 3

Block	PTL	Title	2000 Sheet Hopper Ass'y
		DWG.No	N517460-00

Parts list No.	N517461-01 (2/2)	REV. No.	DATE 06 3

Block	PTL	Title	2000 Sheet Hopper Ass'y
		DWG.N	N517460-00

No.	Part No.		Part name	Q'ty	Remarks	REV. No.	Part No.		Part name	Q'ty	Remarks	REV. No.	Part No.		Part name	Q'ty	Remarks	REV. No.
80																		
79	G1501395	N214133	Size Guide Cover R	1														
78	G1501142	80154975	Screw, M3×6 Flat Hd. Phillips	1														
77	G1501577	N324493	Release Plate	1														
76	G1501160	8065203	Screw, M4×8 Pan Hd. Phillips	7														
75	G1501154	8065103	Screw, M3×8 Pan Hd. Phillips	4														
74	G1501639	N327088A	Paper Size Guide R Ass'y 2	1														
73	G1501014	70035085	M4×8 Bind Screw	5														
72	G1501368	N213332	Size Guide Cover	1														
71	G1501394	N214132	Lock Release Plate M	1														
70	G1501372	N213369A	Paper Size Guide F Ass'y	1														
69	G1501371	N213335	Shutter Plate 2	2	*1		G1505371	N213335	Shutter Plate 2	2								
68	G1501088	7072027	Retaining Ring-E	2														
67	G1501615	N325602	Pinion	4														
66	G1501617	N325603	Size Guide Drive Shaft	2														
65	G1501828	N421472A	Lock Shaft Plate Ass'y	1														
64	G1501095	7086091	Plug Cushion Rubber	2														
63	G1501086	7072025	Retaining Ring-E	4														
* 62	G1501709	N413005	Hook Ring B	2														
61	G1501075	7062181	Extension Spring	1														
60	G1501710	N413562	Latch Roller Shaft	1														
59	G1501711	N413564A	Latch Roller Ass'y	1														
58																		
57	G1501071	7062137	Extension Spring	1														
* 56	G1501709	N413005	Hook Ring B	1														
55	G1501652	N328490A	Z Arm Sub Ass'y	1														
54																		
53	G1501020	7007560	M4×10 Tap Screw	2														
52	G1501014	70035085	M4×8 Bind Screw	2														
51	G1501184	N000616	Front Case	1														
50																		
49	G1501153	8065102	Screw, M3×6 Pan Hd. Phillips	1														
48	G1501791	N420840	Shaft Holder	1														
47																		
46	G1501160	8065203	Screw, M4×8 Pan Hd. Phillips	4														
* 45	G1501053	7060020	Rotary Damper	2														
* 44	G1501326	N212666	Damper Gear	1														
43	G1501009	70033065	M3×6 Bind Screw	2														
42	G1501634	N326380A	Sensor Plate Holder Ass'y	1														
41	G1501272	N212075	Sensor Plate	1														

*1: Do not use this parts for RoHS. *2: Use this parts only for RoHS(From S/N Q47604XXXXX).

*:Recommendable Spare Parts

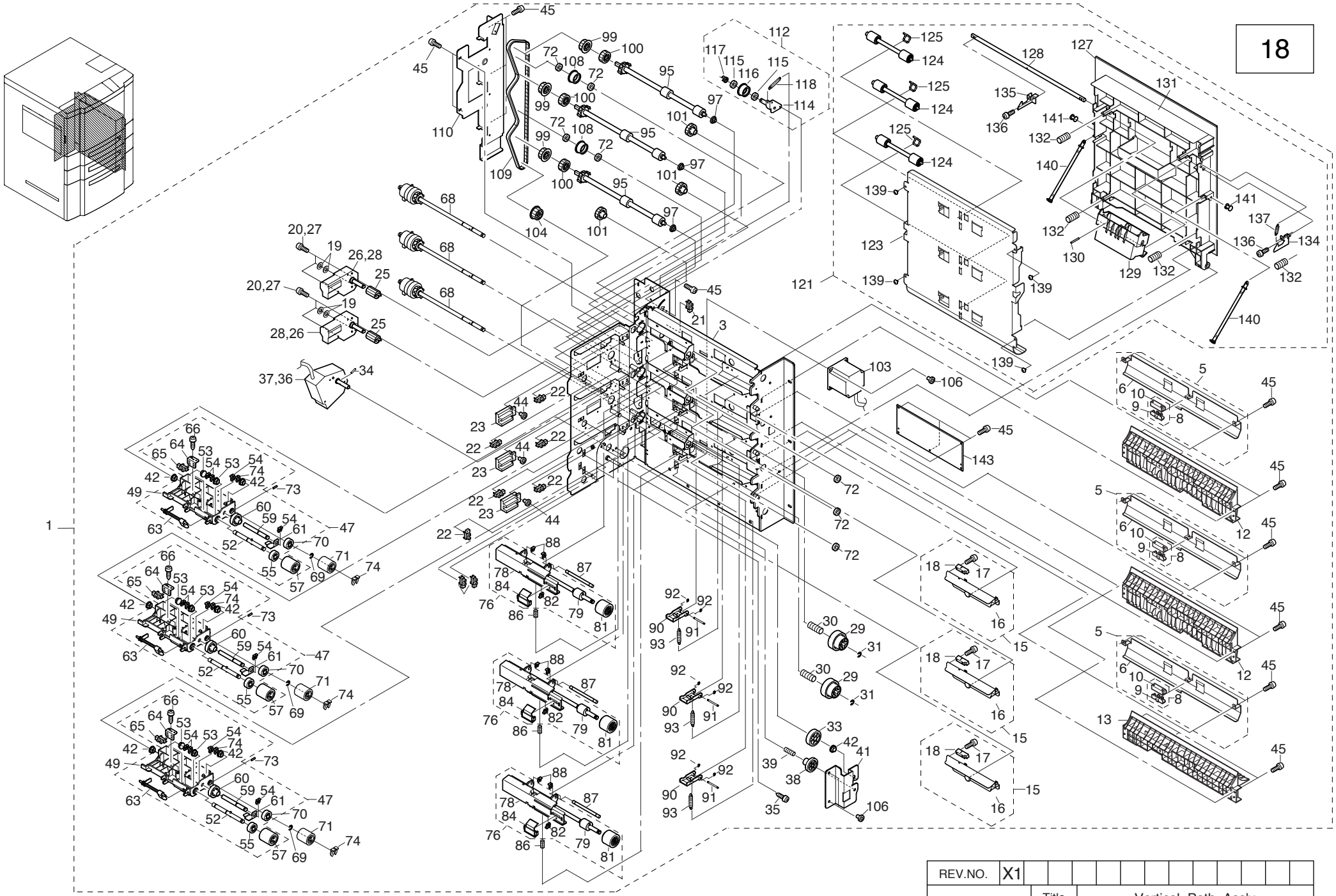

REV.NO.	X1											
PTV		Title	Vertical Path Ass'y									
		DWG. No.	N517462 - 01									

*1: Do not use this parts for RoHS. *2: Use this parts only for RoHS(From S/N Q47604XXXXX).

*:Recommendable Spare Parts

	No.	Part No.		Part name	Q'ty	Remarks	REV. No.	Part No.		Part name	Q'ty	Remarks	REV. No.	Part No.		Part name	Q'ty	Remarks	REV. No.
	40																		
	39	G1501833	N421784	Coupling Spring	1														
*	38	G1501482	N322951	Idler Gear	1														
*	37							G1508295	N2122432	Geared Motor 2000	1	*2	X1						
*	36	G1501295	N212243	Geared Motor 2000	1	*1													
	35	G1501020	7007560	M4X10 Tap Screw	3														
	34	G1501149	8021048	D3X14 Pin	1														
*	33	G1501486	N322979	Motor Gear DDS	1														
	32																		
	31	G1501087	7072026	Retaining Ring-E	2														
	30	G1501753	N420041	Coupling Gear Spring	2														
*	29	G1501471	N322885	Coupling Gear	2														
*	28							G1508312	N2124252	Geared Motor 500	2	*2	X1						
	27	G1501158	8065109	M3X25 Screw	6	*1													
*	26	G1501312	N212425	Geared Motor 500	2	*1													
*	25	G1501472	N322886	Motor Gear	2														
	24																		
*	23	G1501102	7393050	Photo Sensor	3	*1		G1505102	N335673A	Photo Sensor	3								
*	22	G1501098	7390160	Photo Interrupter	8	*1		G1505098	73901602	Photo Interrupter	8								
*	21	G1501099	7390161	Photo Interrupter	1	*1		G1505099	73901612	Photo Interrupter	1								
	20							G1502040	8065110	M3X30 Screw	6	*2	X1						
	19							G1551000	3336813	FP Washer	4	*2	X1						
*	18	G1501100	7393010	Photo Sensor	3	*1		G1505100	73930102	Photo Sensor	3								
	17	G1501157	8065107	M3X16 Screw	3														
	16	G1501455	N322839	Guide Plate	3	*1		G1505455	N322839	Guide Plate	3								
	15	G1501586	N324693A	Guide Plate Ass'y	3														
	14																		
	13	G1501201	N104504	Paper Guide C	1														
	12	G1501200	N104503	Paper Guide B	2														
	11																		
*	10	G1501100	7393010	Photo Sensor	3	*1		G1505100	73930102	Photo Sensor	3								
*	9	G1501344	N212799	Sensor Holder	3														
	8	G1501817	N421234A	Sensor Ass'y	3	*1		G1505817	N421234D	Sensor Ass'y	3								
	7																		
	6	G1501271	N212069	Paper Guide A	3														
	5	G1501532	N323821A	Paper Guide A Ass'y	3														
	4																		
	3	G1501167	N000515A	IS Frame Ass'y	1														
	2																		
*	1	G1511014	N105598B	IS Path Ass'y	1	*1		G1515014	N105598D	IS Path Ass'y	1		X1						

Parts list No.	N517463-01 (1/4)	REV. No.		X1
		DATE	06 3	06 3

Block	PTV	Title	Vertical Path Ass'y
		DWG.No	N517462-01

Parts list No.	N517463-01 (2/4)	REV. No.	DATE 06 3

Block	PTV	Title	Vertical Path Ass'y
		DWG.No	N517462-01

	No.	Part No.		Part name	Q'ty	Remarks	REV. No.	Part No.		Part name	Q'ty	Remarks	REV. No.	Part No.		Part name	Q'ty	Remarks	REV. No.
	80																		
*	79	G1501633	N326183	Torque Limiter 2	3	*1		G1505633	N3261832	Torque Limiter 2	3								
	78	G1501204	N104512	Separate Roller Base	3														
	77																		
	76	G1501531	N323779A	Separate Roller Base Ass'y	3														
	75																		
*	74	G1501708	N413004	Hook Ring A	6														
	73	G1501147	8021047	D3X12 Pin	3														
*	72	G1501042	7040910	B.B	7														
*	71	G1501549	N324285	Pick Roller	3														
*	70	G1501461	N322866	Pick Drive Gear	3														
	69	G1501086	7072025	Retaining Ring-E	3														
*	68	G1501517	N323305A	Pick Drive Shaft Ass'y	3	*1		G1505517	N323305B	Pick Drive Shaft Ass'y	3								
	67																		
	66	G1501025	7007572	Tap Screw	3														
*	65	G1501098	7390160	Photo Interrupter	3	*1		G1505098	73901602	Photo Interrupter	3								
	64	G1501737	N419957	Sensor Plate	3														
	63	G1501478	N322904	Sensor Slit	3														
	62																		
	61	G1501745	N419990	PF Guide	3														
*	60	G1501438	N322779	Pick Idler Gear	3														
	59	G1501725	N419901	Idler Gear Shaft	3														
	58																		
*	57	G1501549	N324285	Pick Roller	3														
	56																		
*	55	G1501460	N322865	Pick Roller Gear	3														
*	54	G1501708	N413004	Hook Ring A	12														
*	53	G1501045	7044020	Sleeve Bearing	6														
	52	G1501747	N419999A	Pick Roller Shaft Ass'y	3														
	51																		
	50																		
	49	G1501202	N104510	Pick Frame	3														
	48																		
	47	G1501314	N212485A	Pick Frame Ass'y	3														
	46																		
	45	G1501153	8065102	M3X6 Screw	24														
	44	G1501016	70035125	M4X12 Bind Screw	3														
	43																		
*	42	G1501045	7044020	Sleeve Bearing	7														
	41	G1501475	N322889	Shaft Holder	1														

*1: Do not use this parts for RoHS. *2: Use this parts only for RoHS(From S/N Q47604XXXXX).

*:Recommendable Spare Parts

*1: Do not use this parts for RoHS. *2: Use this parts only for RoHS(From S/N Q47604XXXXX).

*:Recommendable Spare Parts

	No.	Part No.		Part name	Q'ty	Remarks	REV. No.	Part No.		Part name	Q'ty	Remarks	REV. No.	Part No.		Part name	Q'ty	Remarks	REV. No.
	120																		
	119																		
	118	G1501070	7062130	Extension Spring	1														
*	117	G1501411	N312069	Gear Stopper	1														
*	116	G1501594	N324977	Tension Roller B	1														
*	115	G1501042	7040910	B.B	2														
	114	G1501746	N419998A	TP Base Ass'y	1														
	113																		
	112	G1501533	N323822A	Tension Pulley Ass'y	1														
	111																		
	110	G1501281	N212091	Back Plate	1														
*	109	G1511004	70823762	Timing Belt	1														
*	108	G1501413	N312292	Tension Roller	2														
	107																		
	106	G1501015	70035105	M4X10 Bind Screw	4														
	105																		
*	104	G1511055	N327931	Motor Pulley (Z52)	1														
*	103	G1501262	N2112203	Stepping Motor 5	1	*1		G1505262	N2112206	Stepping Motor 5	1								
	102																		
*	101	G1501438	N322779	Pick Idler Gear	3														
*	100	G1501439	N322780	IS Drive Gear	3														
*	99	G1501437	N322778	IS Drive Pulley	3														
	98																		
*	97	G1501046	7044030	Sleeve Bearing	3														
	96																		
*	95	G1501516	N323304A	Rubber Roll Shaft Ass'y	3														
	94																		
	93	G1501073	7062153	Extension Spring	3														
	92	G1501083	7072022	Retaining Ring-E	6														
	91	G1501739	N419959	SR Pin	3														
	90	G1501723	N419898	Holder Guide B	3														
	89																		
*	88	G1501709	N413005	Hook Ring B	6														
	87	G1501738	N419958	SRB Shaft	3														
*	86	G1501798	N420889	Separate Roller SP	3														
	85																		
*	84	G1501712	N413640B	Separator Ass'y	3														
	83																		
*	82	G1501708	N413004	Hook Ring A	3														
*	81	G1501551	N324286	Separate Roller	3														

Parts list No.	N517463-01 (3/4)	REV. No.																	
		DATE	06 3																

Block	PTV	Title	Vertical Path Ass'y
		DWG.No	N517462-01

Parts list No.	N517463-01 (4/4)	REV. No.	/														
		DATE	06.3														

Block	PTV	Title	Vertical Path Ass'y	18
		DWG.N	N517462-01	

No.	Part No.		Part name	Q'ty	Remarks	REV. No.	Part No.		Part name	Q'ty	Remarks	REV. No.	Part No.		Part name	Q'ty	Remarks	REV. No.
160																		
159																		
158																		
157																		
156																		
155																		
154																		
153																		
152																		
151																		
150																		
149																		
148																		
147																		
146																		
145																		
144																		
*143	G1511030	N214695A	HP092 Ass'y	1	*1		G1515030	N214695B	HP092 Ass'y	1		/						
142																		
141	G1501050	7047053	Rivet	2														
140	G1501419	N313320	Open Stopper	2														
139	G1501095	7086091	Plug Cussion Rubber	4														
138																		
137	G1501069	7062129	Extension Spring	1														
136	G1501153	8065102	M3X6 Screw	2														
135	G1501457	N3228432	Lock Plate	1														
134	G1501456	N322843	Lock Plate	1														
133																		
132	G1501820	N421259	Pressure Spring	4														
131	G1501854	N423682	Protection Sheet	1														
130	G1501151	8021053	D3X28 Pin	1														
129	G1501383	N213533	CV Lever	1														
128	G1501724	N419899	Knob Shaft	1														
127	G1501170	N000521	IS Cover	1														
126																		
*125	G1501065	7062104	Extension Spring	3														
*124	G1501433	N322769C	Pressure Roll Ass'y	3	*1		G1505433	N322769F	Pressure Roll Ass'y	3		/						
123	G1501331	N212725A	Pressure Roll Base Ass'y	1														
122																		
121	G1501224	N104712A	IS Cover Ass'y	1	*1		G1505224	N104712A	IS Cover Ass'y	1		/						

*1: Do not use this parts for RoHS. *2: Use this parts only for RoHS(From S/N Q47604XXXXX).

*:Recommendable Spare Parts

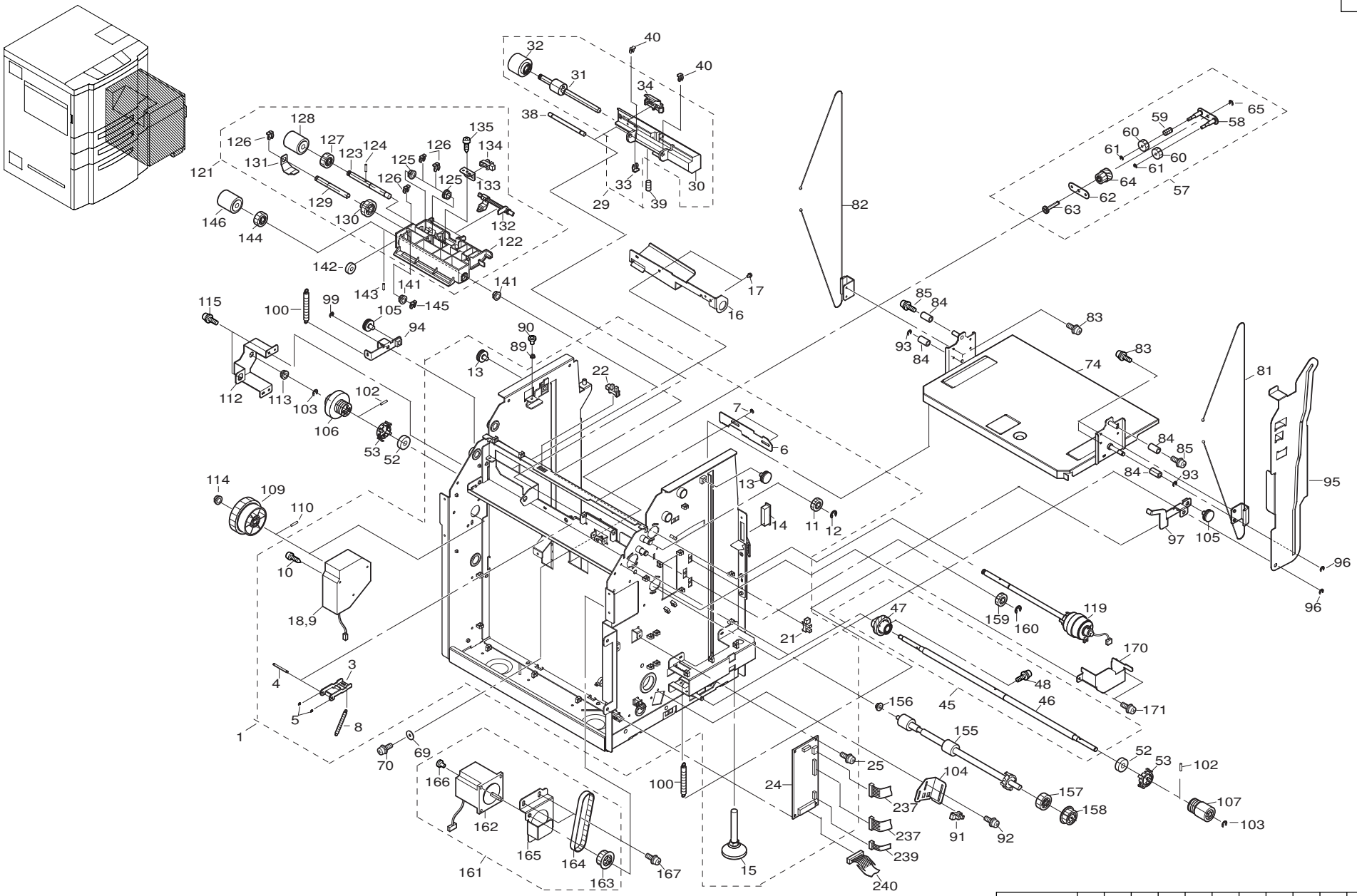

REV.NO.	D												
LH		Title	3000 Sheet Hopper Ass'y										
		DWG. No.	N517464 - 01 (1/2)										

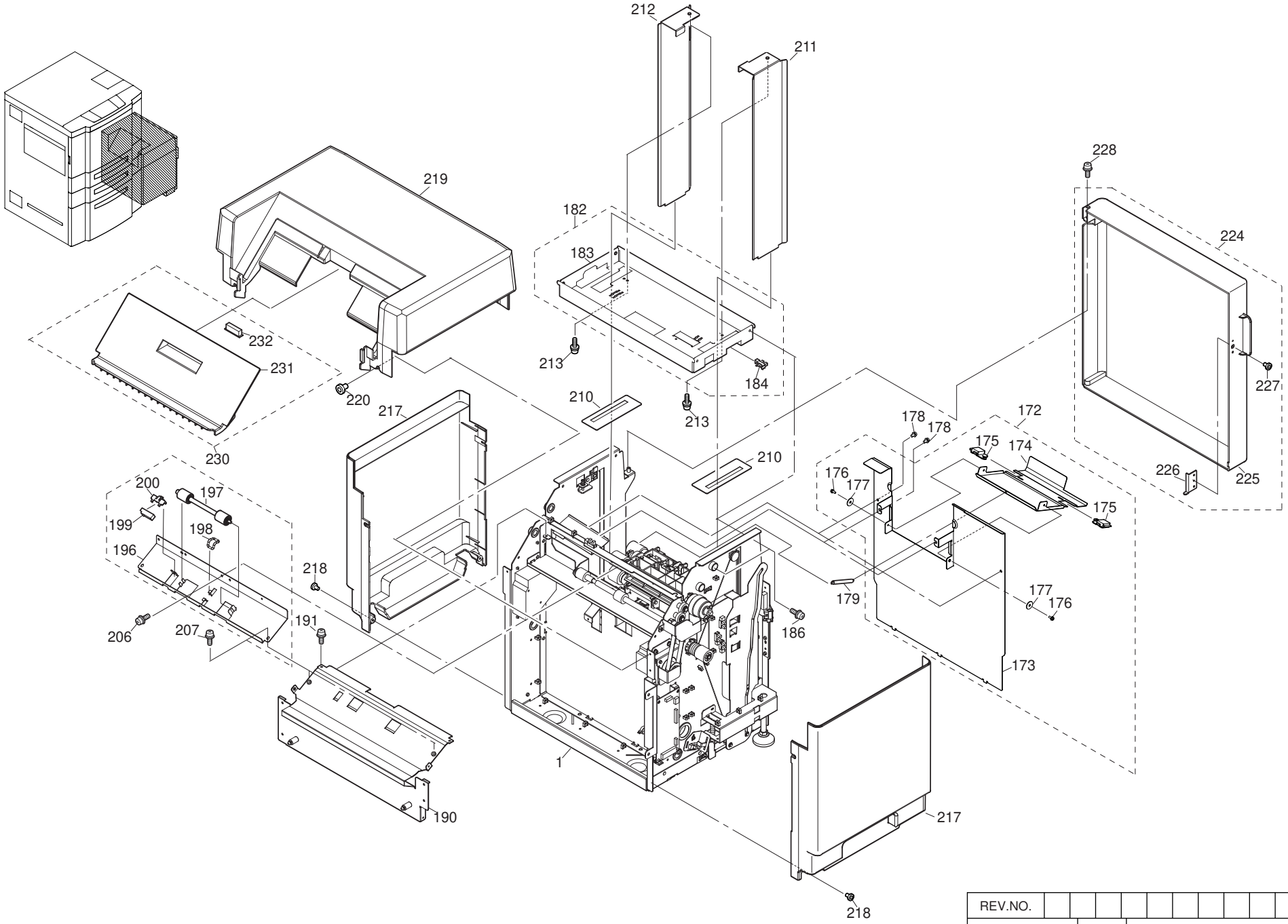

REV.NO.													
LH	Title	3000 Sheet Hopper Ass'y											
	DWG. No.	N517464 - 01 (2/2)											

*1: Do not use this parts for RoHS. *2: Use this parts only for RoHS(From S/N Q58604XXXXX).

*:Recommendable Spare Parts

No.	Part No.		Part name	Q'ty	Remarks	REV. No.	Part No.		Part name	Q'ty	Remarks	REV. No.	Part No.		Part name	Q'ty	Remarks	REV. No.
*40	G1501709	N413005	Hook Ring B	2														
*39	G1501798	N420889	Separate Roller SP	1														
38	G1501738	N419958	SRB Shaft	1														
37																		
36																		
35																		
*34	G1501712	N413640B	Separator Ass'y	1														
*33	G1501708	N413004	Hook Ring A	1														
*32	G1501551	N324286	Separate Roller	1														
*31	G1501633	N326183	Torque Limiter 2	1	*1		G1505633	N3261832	Torque Limiter 2	1								
30	G1501204	N104512	Separate Roller Base	1														
29	G1501531	N323779A	Separate Roller Base Ass'y	1														
28																		
27																		
26																		
25	G1501153	8065102	Screw, M3×6 Pan Hd. Phillips	2														
*24	G1511031	N214697A	AH012 Ass'y	1	*1		G1515031	N214697B	AH012 Ass'y	1								
23																		
*22	G1501099	7390161	Photo Interrupter	1	*1		G1505099	73901612	Photo Interrupter	1								
*21	G1501098	7390160	Photo Interrupter	6	*1		G1505098	73901602	Photo Interrupter	6								
20																		
19																		
*18							G1508295	N2122432	Geared Motor 2000	1	*2	D						
17	G1501153	8065102	Screw, M3×6 Pan Hd. Phillips	2														
16	G1501393	N214121	PF Plate (LH)	1														
15	G1501119	7862004	Adjuster	2														
14	G1501120	7871106	Magnet Catch	1														
*13	G1501043	7041341	Derlin Bearing	2														
12	G1501082	7072005	Retaining Ring-E	1														
*11	G1501414	N312309	Pick Idler Gear	1														
10	G1501020	7007560	Tap Screw	3														
*9	G1501295	N212243	Geared Motor 2000	1	*1													
8	G1501067	7062122	Extension Spring	1														
7	G1501079	7072002	Retaining Ring-E	2														
6	G1501515	N323293	Loading Rack	1														
5	G1501083	7072022	Retaining Ring-E	2														
4	G1501739	N419959	SR Pin	1														
3	G1501785	N420734	Holder Guide B (LH)	1	*1		G1505785	N420734	Holder Guide B (LH)	1								
2	G1501239	N104855A	Frame (R) Ass'y	1														
1	G1501186	N000618A	Frame Ass'y	1														

Parts list No.	N517465-01 (1/6)	REV. No.	D
		DATE	06 3 / 06 3

Block	LH	Title	3000 Sheet Hopper Ass'y
		DWG.N	N517464-01

Parts list No.	N517465-01 (2/6)	REV. No.																Block	LH	Title	3000 Sheet Hopper Ass'y	19
		DATE																		DWG.No.	N517464-01	

	No.	Part No.		Part name	Q'ty	Remarks	REV. No.	Part No.		Part name	Q'ty	Remarks	REV. No.	Part No.		Part name	Q'ty	Remarks	REV. No.
	80																		
	79																		
	78																		
	77																		
	76																		
	75																		
	74	G1501569	N324438A	Table Ass'y	1														
	73																		
	72																		
	71																		
	70	G1501153	8065102	Screw, M3×6 Pan Hd. Phillips	1														
	69	G1501000	437086	VF Washer	1														
	68																		
	67																		
	66																		
	65	G1501080	7072003	Retaining Ring-E	1														
*	64	G1501513	N323289	Change Gear 2	1														
	63	G1501783	N420694	Idler Arm Shaft	1														
	62	G1501808	N421039	Idler Arm HP	1														
	61	G1501079	7072002	Retaining Ring-E	2														
	60	G1501530	N3237442	Loading Gear	2														
	59	G1501786	N420809	Spring R	1														
	58	G1501800	N420911A	Idler Arm (S) Ass'y	1														
	57	G1501571	N324448B	Idler Arm Ass'y	1														
	56																		
	55																		
	54																		
*	53	G1501440	N322782	BB Housing	2														
*	52	G1501164	81005213	B.B	2														
	51																		
	50																		
	49																		
	48	G1501153	8065102	Screw, M3×6 Pan Hd. Phillips	1														
*	47	G1501512	N323288	Change Gear 1	1														
	46	G1501514	N323292	Drive Shaft	1														
	45	G1501572	N324449A	Drive Shaft Ass'y	1														
	44																		
	43																		
	42																		
	41																		

*1: Do not use this parts for RoHS. *2: Use this parts only for RoHS(From S/N Q58604XXXXX).

*:Recommendable Spare Parts

*1: Do not use this parts for RoHS. *2: Use this parts only for RoHS(From S/N Q58604XXXXX).

*:Recommendable Spare Parts

	No.	Part No.		Part name	Q'ty	Remarks	REV. No.	Part No.		Part name	Q'ty	Remarks	REV. No.	Part No.		Part name	Q'ty	Remarks	REV. No.
	120																		
*	119	G1501517	N323305A	Pick Drive Shaft Ass'y	1	*1		G1505517	N323305B	Pick Drive Shaft Ass'y	1								
	118																		
	117																		
	116																		
	115	G1501153	8065102	Screw, M3×6 Pan Hd. Phillips	2														
*	114	G1501045	7044020	Sleeve Bearing	1														
*	113	G1501046	7044030	Sleeve Bearing	1														
	112	G1501299	N212280	T Motor Bracket	1														
	111																		
	110	G1501149	8021048	D3×14 Pin	1														
*	109	G1501329	N212705	Motor Gear LH	1														
	108																		
	107	G1501354	N213146	Drive Gear 2	1														
	106	G1501311	N212416	Drive Gear	1														
*	105	G1501043	7041341	Derlin Bearing	2														
	104	G1501581	N324512	Sensor Holder	1														
	103	G1501081	7072004	Retaining Ring-E	2														
	102	G1501149	8021048	D3×14 Pin	2														
	101																		
	100	G1501074	7062155	Extension Spring	2														
	99	G1501080	7072003	Retaining Ring-E	1														
	98																		
	97	G1501582	N324513A	Pulley Holder DS	1														
	96	G1501080	7072003	Retaining Ring-E	2														
	95	G1501304	N212339	Position Arm	1														
	94	G1501506	N323046A	Pulley Holder D	1														
	93	G1501080	7072003	Retaining Ring-E	2														
	92	G1501153	8065102	Screw, M3×6 Pan Hd. Phillips	1														
*	91	G1501098	7390160	Photo Interrupter	1	*1		G1505098	73901602	Photo Interrupter	1								
	90	G1501012	70033205	M3×20 Bind Screw	1														
	89	G1501034	7037022	Frange Nut	1														
	88																		
	87																		
	86																		
	85	G1501153	8065102	Screw, M3×6 Pan Hd. Phillips	2														
	84	G1501789	N420830	Table Roller A	4														
	83	G1501153	8065102	Screw, M3×6 Pan Hd. Phillips	4														
*	82	G1501565	N324395B	Wire Holder	1	*1		G1505565	N324395D	Wire Holder	1								
*	81	G1501564	N324395A	Wire Holder	1	*1		G1505564	N324395C	Wire Holder	1								

Parts list No.	N517465-01 (3/6)	REV. No.		DATE	06.3

Block	LH	Title	3000 Sheet Hopper Ass'y
		DWG.No.	N517464-01

Parts list No.	N517465-01 (4/6)	REV. No.	DATE
			06 3

Block	LH	Title	3000 Sheet Hopper Ass'y
		DWG.N	N517464-01

No.	Part No.		Part name	Q'ty	Remarks	REV. No.	Part No.		Part name	Q'ty	Remarks	REV. No.	Part No.		Part name	Q'ty	Remarks	REV. No.
160	G1501082	7072005	Retaining Ring-E	1														
*159	G1501414	N312309	Pick Idler Gear	1														
*158	G1501437	N322778	IS Drive Pulley	1														
*157	G1501439	N322780	IS Drive Gear	1														
*156	G1501046	7044030	Sleeve Bearing	1														
*155	G1501516	N323304A	Rubber Roll Shaft Ass'y	1														
154																		
153																		
152																		
151																		
150																		
149																		
148																		
147																		
*146	G1501549	N324285	Pick Roller	1														
*145	G1501708	N413004	Hook Ring A	1														
*144	G1501461	N322866	Pick Drive Gear	1														
143	G1501147	8021047	D3×12 Pin	1														
*142	G1501042	7040910	B.B	1														
*141	G1501045	7044020	Sleeve Bearing	2														
140																		
139																		
138																		
137																		
136																		
135	G1501025	7007572	Tap Screw	1														
*134	G1501098	7390160	Photo Interrupter	1	*1		G1505098	73901602	Photo Interrupter	1								
133	G1501737	N419957	Sensor Plate	1														
132	G1501478	N322904	Sensor Slit	1														
131	G1501745	N419990	PF Guide	1														
*130	G1501438	N322779	Pick Idler Gear	1														
129	G1501725	N419901	Idler Gear Shaft	1														
*128	G1501549	N324285	Pick Roller	1														
*127	G1501460	N322865	Pick Roller Gear	1														
*126	G1501708	N413004	Hook Ring A	4														
*125	G1501045	7044020	Sleeve Bearing	2														
124	G1501031	7033157	D3×14 Roll Pin	1														
123	G1501726	N419904	Pick Roller Shaft	1														
122	G1501203	N1045102	Pick Frame	1														
121	G1501315	N212485B	Pick Frame Ass'y	1														

*1: Do not use this parts for RoHS. *2: Use this parts only for RoHS(From S/N Q58604XXXXX).

*:Recommendable Spare Parts

*1: Do not use this parts for RoHS. *2: Use this parts only for RoHS(From S/N Q58604XXXXX).

*:Recommendable Spare Parts

	No.	Part No.		Part name	Q'ty	Remarks	REV. No.	Part No.		Part name	Q'ty	Remarks	REV. No.	Part No.		Part name	Q'ty	Remarks	REV. No.
*	200	G1501344	N212799	Sensor Holder	1														
*	199	G1501100	7393010	Photo Sensor	1	*1		G1505100	73930102	Photo Sensor	1								
*	198	G1501065	7062104	Extension Spring	1														
*	197	G1501433	N322769C	Pressure Roll Ass'y	1	*1		G1505433	N322769F	Pressure Roll Ass'y	1								
	196	G1501242	N105009	Pressure Roller Base	1														
	195	G1501348	N212898A	Pressure Roller Base Ass'y	1														
	194																		
	193																		
	192																		
	191	G1501153	8065102	Screw, M3×6 Pan Hd. Phillips	5														
	190	G1501172	N000561A	Rear Frame	1														
	189																		
	188																		
	187																		
	186	G1501160	8065203	Screw, M4×8 Pan Hd. Phillips	4														
	185																		
*	184	G1501098	7390160	Photo Interrupter	1	*1		G1505098	73901602	Photo Interrupter	1								
	183	G1501207	N104531	Upper Frame	1														
	182	G1501341	N212797A	Upper Frame Ass'y	1														
	181																		
	180																		
	179	G1501827	N421453	Spring F	1														
	178	G1501160	8065203	Screw, M4×8 Pan Hd. Phillips	4														
	177	G1501000	437086	VF Washer	2														
	176	G1501154	8065103	Screw, M3×8 Pan Hd. Phillips	2														
	175	G1501424	N314393	BR Separator Cover Latch	2														
	174	G1501364	N213305	Cover F	1														
	173	G1501247	N105040	Front Frame	1														
	172	G1501366	N213327A	Front Frame Ass'y	1														
	171	G1501153	8065102	Screw, M3×6 Pan Hd. Phillips	2														
	170	G1501297	N212278	Side Cover	1														
	169																		
	168																		
	167	G1501160	8065203	Screw, M4×8 Pan Hd. Phillips	2														
	166	G1501015	70035105	M4×10 Bind Screw	2														
	165	G1501298	N212279	S Motor Bracket	1														
*	164	G1511003	70823752	Timing Belt	1														
*	163	G1511056	N3279312	Motor Pulley(Z52)	1														
*	162	G1511020	N2112192	Stepping Motor 3	1	*1		G1515020	N2112194	Stepping Motor 3	1								
	161	G1511065	N330023A	Motor Ass'y(92)	1														

Parts list No.	N517465-01 (5/6)	REV. No.		DATE	06.3

Block	LH	Title	3000 Sheet Hopper Ass'y
		DWG.N	N517464-01

Parts list No.	N517465-01 (6/6)	REV. No.		DATE	06 3

Block	LH	Title	3000 Sheet Hopper Ass'y	19
		DWG.No.	N517464-01	

No.	Part No.		Part name	Q'ty	Remarks	REV. No.	Part No.		Part name	Q'ty	Remarks	REV. No.	Part No.		Part name	Q'ty	Remarks	REV. No.
240	G1501560	N324360	HP5 Sensor 2 Cable Ass'y	1														
239	G1501793	N420879	HP5 Sensor 1 Cable Ass'y	1	*1		G1505793	N420879	HP5 Sensor 1 Cable Ass'y	1								
238																		
237	G1501792	N420877	HP5 IF Cable Ass'y	1														
236																		
235																		
234																		
233																		
232	G1501120	7871106	Magnet Catch	1														
231	G1501177	N000570	Top Cover	1														
230	G1501574	N324451A	Top Cover Ass'y	1														
229																		
228	G1501153	8065102	Screw, M3×6 Pan Hd. Phillips	1														
227	G1501008	70033055	M3×5 Bind Screw	1														
226	G1501766	N420272	Magnet Plate	1														
225	G1501176	N000569	Door	1														
224	G1501343	N212798A	Door Ass'y	1														
223																		
222																		
221																		
220	G1501010	70033085	M3×8 Bind Screw	4														
219	G1501175	N000568	Upper Case	1														
218	G1501010	70033085	M3×8 Bind Screw	8														
217	G1501173	N000566	Side Case	2														
216																		
215																		
214																		
213	G1501160	8065203	Screw, M4×8 Pan Hd. Phillips	2														
212	G1501583	N324522A	Paper Guide Ass'y	1														
211	G1501296	N212275	Paper Guide	1														
210	G1501818	N421256	Shutter Plate (LH)	2														
209																		
208																		
207	G1501160	8065203	Screw, M4×8 Pan Hd. Phillips	2														
206	G1501153	8065102	Screw, M3×6 Pan Hd. Phillips	2														
205																		
204																		
203																		
202																		
201																		

*1: Do not use this parts for RoHS. *2: Use this parts only for RoHS(From S/N Q58604XXXXX).

*:Recommendable Spare Parts

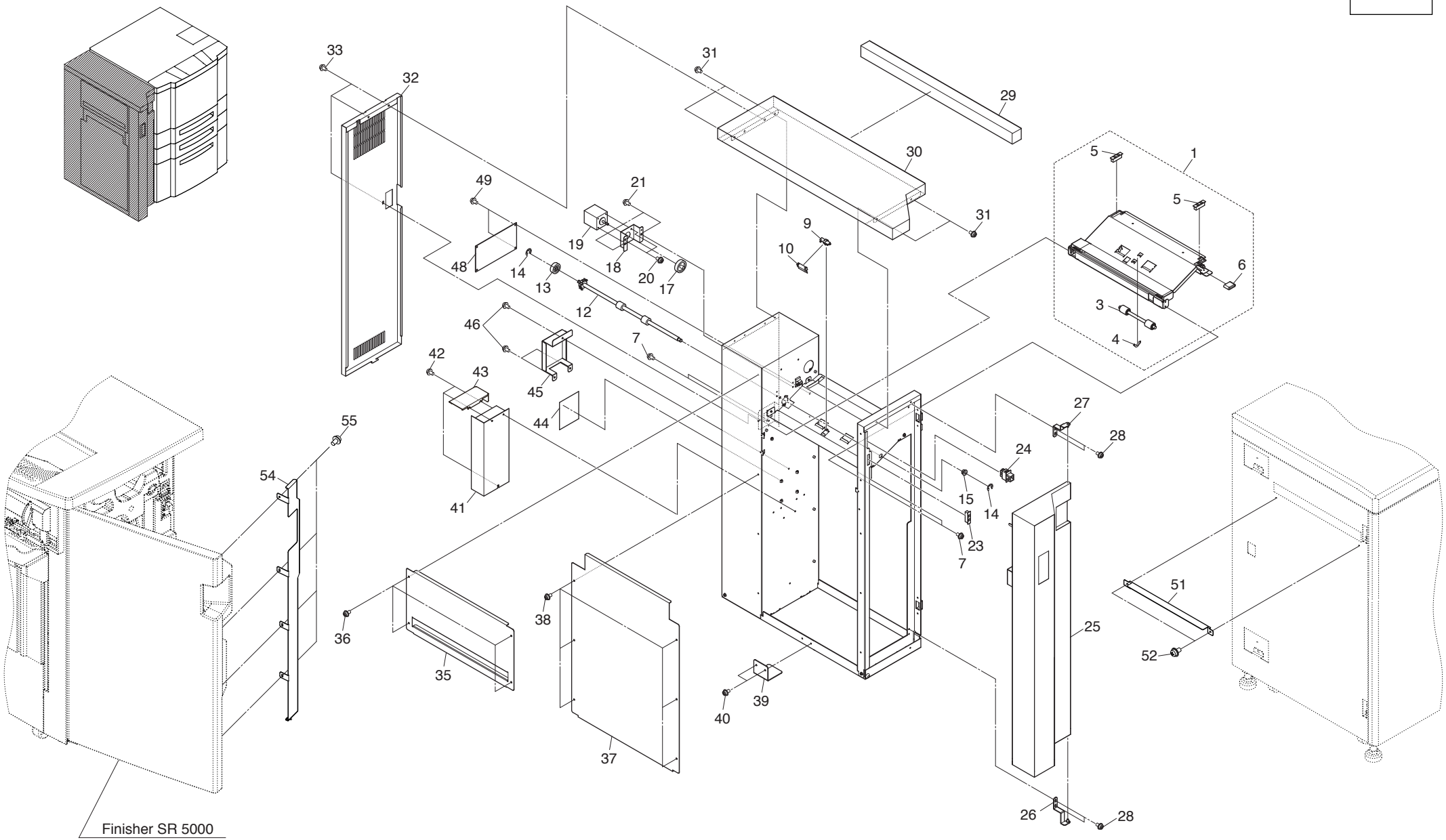

REV.NO.		
TP	Title	Transit Pass Unit
	DWG. No.	N518892 - 00

*:Recommendable Spare Parts

No.	Part No.		Part name	Q'ty	Remarks	REV. No.	Part No.		Part name	Q'ty	Remarks	REV. No.	Part No.		Part name	Q'ty	Remarks	REV. No.
40	G1501160	8065203	M4×8 Screw	2														
39	M3530008	N338961	Grand Plate	1														
38	G1501160	8065203	M4×8 Screw	6														
37	M3530010	N001500	Window Shade Cover2	1														
36	G1501160	8065203	M4×8 Screw	4														
35	M3530009	N110149	Window Shade Cover1	1														
34																		
33	G1501014	70035085	Bind Screw, M4x8	3														
32	M3530007	N110145A	Rear Cover	1														
31	G1501014	70035085	Bind Screw, M4x8	4														
30	M3530004	N001498A	Top Cover	1														
29	M3530012	N339012	Block Sponge	1														
28	G1501160	8065203	M4×8 Screw	4														
27	M3530003	N338957A	Cover Hinge(U)	1														
26	M3530002	N338956A	Cover Hinge(L)	1														
25	M3530001	N220735A	Front Cover Ass'y	1														
* 24	G8515019	75341862	Push Switch	1														
23	G1501120	7871106	Magnet Catch	1														
22																		
21	G1501160	8065203	M4×8 Screw	2														
20	G1501153	8065102	M3×6 Screw	2														
* 19	G1515028	N2145722	Stepping Motor 40	1														
18	M3530006	N338960	Motor Holder	1														
* 17	G1501430	N322767	Motor Gear(SB)	1														
16																		
* 15	G1501047	7044031	Sleeve Bearing	1														
14	G1501086	7072025	Retaining Ring-E	2														
* 13	G1501429	N322766	Drive Roller Gear(SB)	1														
* 12	G1501534	N323881A	Paper Feed Roller Ass'y	1														
11																		
* 10	G1505100	73930102	Photo Sensor	1														
* 9	G1501344	N212799	Sensor Holder	1														
8																		
7	G1501160	8065203	M4×8 Screw	4														
* 6	G1501544	N324150	PHD Knob	1														
5	G1501120	7871106	Magnet Catch	2														
* 4	G1501063	7062075	Extension Spring	1														
* 3	G1505431	N322769D	Pressure Roll Ass'y	1														
2																		
1	M3530005	N110142A	Lower Paper Guide Ass'y	1														

Parts list No.	N518893-00 (1/2)	REV. No.	DATE

Block	TP	Title	Transit Pass Unit
		DWG.No.	N518892-00

Parts list No.	N518893-00 (2/2)	REV. No. / DATE

Block	TP	Title	Transit Pass Unit
		DWG.No.	N518892-00

No.	Part No.		Part name	Q'ty	Remarks	REV. No.	Part No.		Part name	Q'ty	Remarks	REV. No.	Part No.		Part name	Q'ty	Remarks	REV. No.
80																		
79																		
78																		
77																		
76																		
75																		
74																		
73																		
72																		
71																		
70																		
69																		
68																		
67																		
66																		
65																		
64																		
63																		
62																		
61																		
60																		
59																		
58																		
57																		
56																		
55	G1501020	7007560	M4×10 Tap Screw	4														
54	M3530014	N339031A	FC Cover Ass'y	1														
53																		
52	G1501153	8065102	M3×6 Screw	2														
51	M3530013	N220677	SB Cover Paper Guide	1														
50																		
49	G1501160	8065203	M4×8 Screw	2														
* 48	M3530011	N220584A	ED089 Ass'y	1														
47																		
46	G1501160	8065203	M4×8 Screw	3														
45	G8511176	N331898	RB Cover	1														
* 44	G8515108	N327165B	RB301 Ass'y	1														
43	M3530015	N339059	PS Cover	1														
42	G1501160	8065203	M4×8 Screw	3														
* 41	G1525009	73657322	Switching Regulator	1														

*:Recommendable Spare Parts