PRINTER/SCANNER CONTROLLER OPTIONS

(Machine Code: A649, A650, A651, A732, A733)

Service Manual

TS Dept. IPP Business Division
RICOH Co., LTD.

April 25th 1997

SECTION 1

OVERALL
MACHINE INFORMATION

1. INTRODUCTION

The SP3 base engine contains an interface for the SP3 multi-function controller. The SP3 multi-function controller adds printer and/or scanner functions.

In addition to the original copy functions of the SP3 base engine, the SP3 can print image files received from a host computer, and supports SCSI scanning (optional). The printer supports the PCL5E and optional PostScript printer languages. Host printer data can be received at the standard parallel, serial, or optional network port.

An IDE hard disk drive is standard, to provide storage for temporary print data as well as other functions.

The controller board has 2 DRAM SIMM slots for additional RAM modules. Up to 64 MB (32MB x 2) of memory can be installed to improve the printer performance. The base memory is 8 MB, so there is a maximum total of 72 MB.

Images can be printed at 300, 400, or 600 dpi. The engine supports a maximum print speed of 40 pages per minute when printing at 300 dpi, which is the same speed as copying at 400 dpi.

2. MULTI-FUNCTION SPECIFICATIONS

Copying Resolution	400 x 400 dpi
Printing Resolution	300 x 300 dpi, (400 x 400 dpi)*1, 600 x 600 dpi
Scanning Resolution	100 to 1600 dpi
Gray Scale	256 levels
Printing Emulation	Main Controller Board: PCL5e Optional PS board: PostScript Level 2
Print Speed	Maximum: 40 pages per minute (300/400 dpi) Maximum: 20 pages per minute (600 dpi)
Printer Resident Fonts	45 scaleable typefaces in 14 typeface families (35 Intellifont and 10 TrueType format fonts) 6 bitmapped typefaces in the Line Printer typeface family
Host Interface for Printing	Bi-directional Parallel Interface x1 RS-232C x1 Optional Network Interface (Ethernet or Token Ring)
Host Interface for Scanning	Optional SCSI2 Interface
RAM Capacity	8 MB (Standard) 2 DRAM SIMM Slots (Up to 64 MB) Maximum Total: Up to 72 MB

*1: PS2 Only

3. BOARD CONFIGURATION

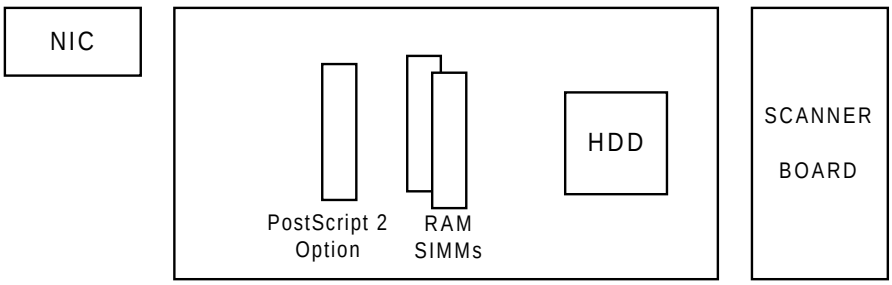

A649V500.wmf

Item	Machine Code
• Main Controller Board (Including HDD)	A649-(Printer Controller Type 401)
• PostScript 2 Option	A650-(PostScript 2 Kit Type 401)
• Scanner Option	A651-(Scanner Kit Type 401)
• Network Interface Card	A732-For Ethernet (NIC401-E) A733-For Token Ring (NIC401-TR)
• RAM SIMM Option	Obtain from local stores The DRAM SIMM sockets accept modules of 8M, 16M, or 32M. You can add up to 64M of additional DRAM for the maximum system.

4. SOFTWARE

4.1 PRINTER DRIVER

- PCL5e Printer Driver for Windows 3.1/ 95
- PS2 Printer Driver for Windows 3.1/ 95/ Macintosh

4.2 SCANNER DRIVER

- ISIS
  Pixview..... Windows 3.1/ 95
  ISIS Driver ..... 16 bit/ 32 bit
- Twain
  Scan Work ..... Windows 3.1/ 95
  Twain Driver..... Windows 3.1/ 95

4.3 NETWORK UTILITY

- Flash Update Utilities
- TES Utilities

5. PRINTING OUTPUT

5.1 TRAY AND BIN FUNCTIONALITY

5.1.1 500-sheet Tray

- Face-up
- Normal and Reverse Order
- Duplex (First side up)
- Document and Group Sort
- Separation sheets

5.1.2 Finisher

- Face-up
- Normal and Reverse Order
- Duplex (First side up)
- Document and Group Sort
- Staggered Job Separation
- Stapling

NOTE: When Normal Order is selected, stapling is not available.

5.1.3 3-bin Sorter

- Face-up and Face-down
- Normal and Reverse Order
- Duplex (First side up)
- Document and Group Sort
- Staggered Job Separation/Separation sheets

NOTE: The job separation type depends on which bin is selected.
If the first bin is selected, staggered job separation is available.
If the second or third bin is selected, separations sheets are available.
In both cases, job separation must be switched on.

5.2 OUTPUT CAPABILITY

5.2.1 Single Copy

Reverse order print	Normal order print	Normal order print at 3-bin sorter (face down)	Duplex print
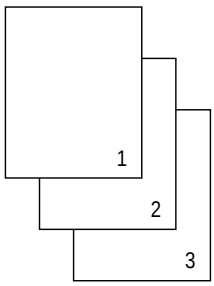	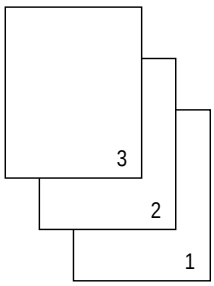	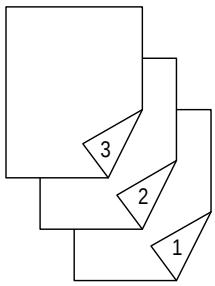	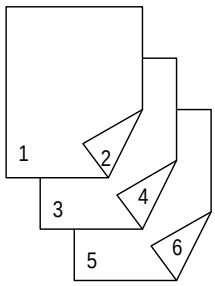

5.2.2 Single Copy with Job Separation Sheet (not used the jogger feature)

Reverse order print	Normal order print	Normal order print at 3-bin sorter (face down)	Duplex print
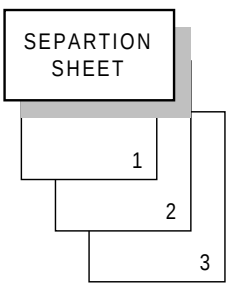	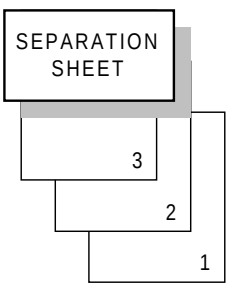	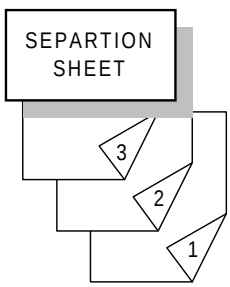	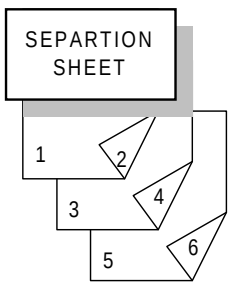

5.2.3 Multiple Copies

Document Sort Reverse order print	Group Sort Normal order print	Group Sort Normal order print at 3-bin sorter (face down)	Duplex print
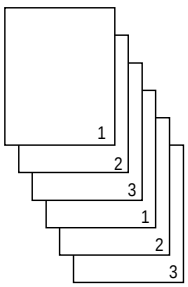	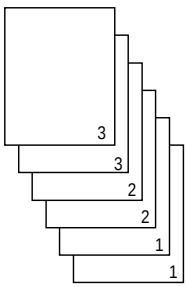	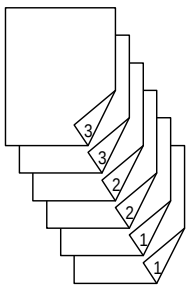	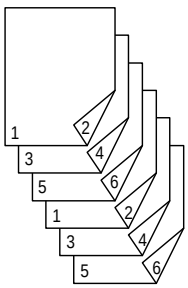

5.2.4 Multiple copies with Job Separation Sheet

Document Sort Reverse order print	Normal order print	Group Sort Normal order print at 3-bin sorter (face down)	Duplex print
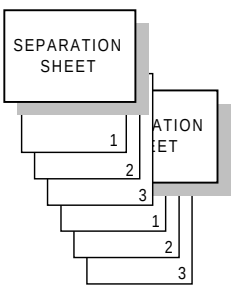	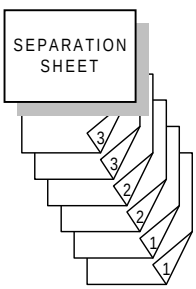	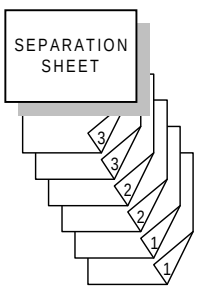	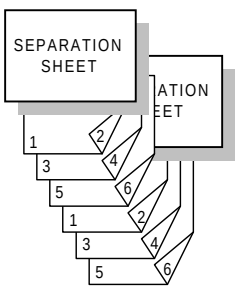

NOTE: In job separation mode (single copy or multiple copy)without the jogger feature, a separation sheet will be inserted only if the same paper size but opposite orientation exists.

5.2.5 Job Separation Using the Jogger Feature

- 1-bin Finisher
- 3-bin Sorter (1st bin only)

Shift using the jogger

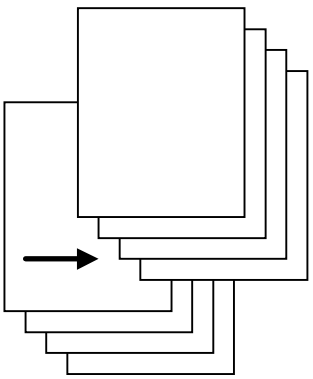

A649V519.wmf

SECTION 2

DETAILED SECTION DESCRIPTIONS

1. OUTLINE

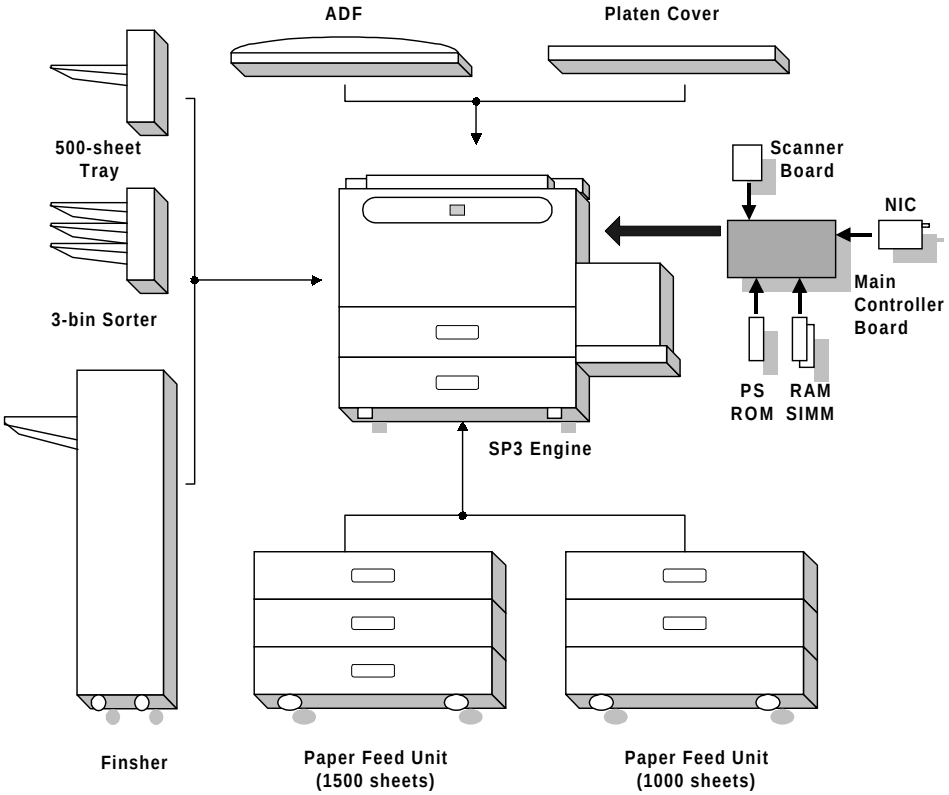

A649D500.wmf

The main controller board is located between the host PC (locally or over a network) and the SP3 engine, and performs the following functions.

- Management of Multifunction Operations
- Printer Interface
- Scanner Interface
- Machine Interface
- Data Buffer
- PCL/PostScript Interpreter

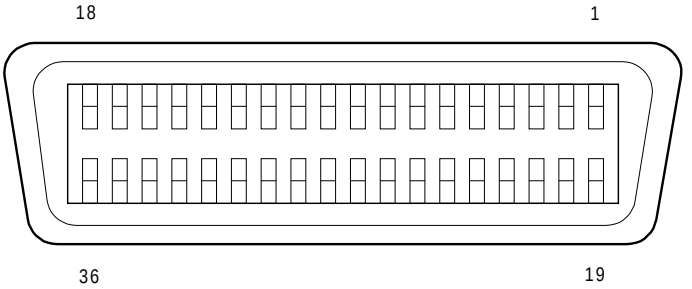

A649D509.wmf

The connector is a 36 pin D-SUB Centronics connector (female).

The bi-directional parallel interface on the controller works in 3 modes; compatible, compatible with nibble, and ECP modes (these modes are standardized by IEEE 1284).

Compatible with nibble and ECP are bidirectional modes, allowing feedback of status data from the SP3 to the host PC.

SIGNAL PIN	**SIGNAL NAME**		
	COMPATIBLE (I/O)	**NIBBLE (I/O)**	**ECP (I/O)**
1	/STROBE (I)	/STROBE (I)	HostClk (I)
2-9	DATA1-8 (I)	NOT USED	DATA1-8 (I/O)
10	/ACK (O)	PtrClk (O)	PeriphClk (O)
11	BUSY (O)	PtrBusy (O)	PeriphAck (O)
12	PE (O)	AckDataReq (O)	/AckReverse (O)
13	SELECT (0)	Xflag (O)	Xflag (O)
14	/AUTOFEED (I)	HostBusy (I)	HostAcK (I)
15	NC		
16	**GND**		
17	**CHASSIS GND**		
18	**NC**		
19-30	**GND**		
31	/INIT (I)	/INIT (I)	/ReverseRequest (I)
32	/ERROR (O)	DataAvail (O)	/PeriphRequest (O)
33	**GND**		
34	**NC**		
35	**+5V**		
36	/SELECTION (I)	1284Active (I)	1284Active (I)

1.2.2 IEEE1284 Compliant Parallel Interface

The Ricoh SP3 controller is compliant with the IEEE 1284 Standard, supporting Compatibility, Nibble, ECP, Device ID, and Negotiation.

1.2.3 Serial Interface

The SP3 operation panel uses the following serial interface configuration parameters.

- Personality
- Baud Rate
  1200, 2400, 4800, 9600, 19200, or 38400.
- Parity, Handshake, DTR Polarity, Stop Bits, Data Bits, I/O Time-out

RS-232C Interface

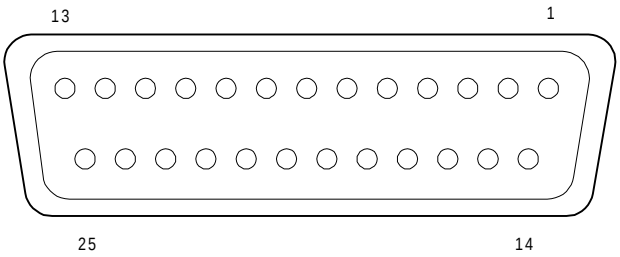

A649D508.wmf

A 25 pin D-SUB female connector (ISO 2110)

PIN NO.	SIGNAL NAME	DESCRIPTION
1	GND	Ground
2	STXD (RD-232)	Serial transmit data
3	SRXD (RD-232)	Serial receive data
4	+10V	
6	SDSR (DSR)	Data set ready
7	GND	Ground
20	SDTR (DTR)	Data terminal ready

1.2.4 Optional Network Interface

When an optional Network Interface Card is installed in the SP3 controller, the printing data, printer status and/or commands can be sent through the network interface.

Two types of network interface card have been provided for the SP3 controller.

1) Ethernet NIC Type 401 10Base 2/T (IPX/SPX, TCP/IP, EtherTalk)
2) TokenRing NIC Type 401 4 Mbps, 16 Mbps (IPX/SPX, TCP/IP)

1.3 SCANNER INTERFACE

An optional SCSI-2 interface is available for SP3 scanner functions.

SCSI commands are available at any time for scanning, if the SP3 is in scanner mode.

The SP3 controller can deliver a sustained data transfer rate of 2.5 Mb/second during the data phase of a read command.

High density 50-pin SCSI pin designations

CODE	SIGNAL	PIN
GND	Signal Ground	1
GND	Signal Ground	2
GND	Signal Ground	3
GND	Signal Ground	4
GND	Signal Ground	5
GND	Signal Ground	6
GND	Signal Ground	7
GND	Signal Ground	8
GND	Signal Ground	9
GND	Signal Ground	10
GND	Signal Ground	11
RESERVED	Reserved	12
(N/C)	(Not Connected)	13
RESERVED	Reserved	14
GND	Signal Ground	15
GND	Signal Ground	16
GND	Signal Ground	17
GND	Signal Ground	18
GND	Signal Ground	19
GND	Signal Ground	20
GND	Signal Ground	21
GND	Signal Ground	22
GND	Signal Ground	23
GND	Signal Ground	24
GND	Signal Ground	25
DB	Data	26
DB	Data	27
DB	Data	28
DB	Data	29
DB	Data	30
DB	Data	31
DB	Data	32
DB	Data	33
DB	Data	34
GND	Signal Ground	35
GND	Signal Ground	36

CODE	SIGNAL	PIN
RESERVED	Reserved	37
TERMPWR	Term Power	38
RESERVED	Reserved	39
GND	Signal Ground	40
-ATN	Attention	41
GND	Signal Ground	42
-BSY	Busy	43
-ACK	Acknowledge	44
-RST	Reset	45
-MSG	Message	46
-SEL	Select Out	47
-C/D	Control/Data	48
-REQ	Request	49
-I/O	Input/Output	50

SCSI Terminator Specifications

COMPONENT	SPECIFICATION
Cable Single-Ended Active high density 50-pin Scanner Terminator plug	SCSI-2, high density narrow terminator with internal shield, all plastic cover, low profile with spring latches

A terminator is supplied with the scanner installation kit.

Active terminator

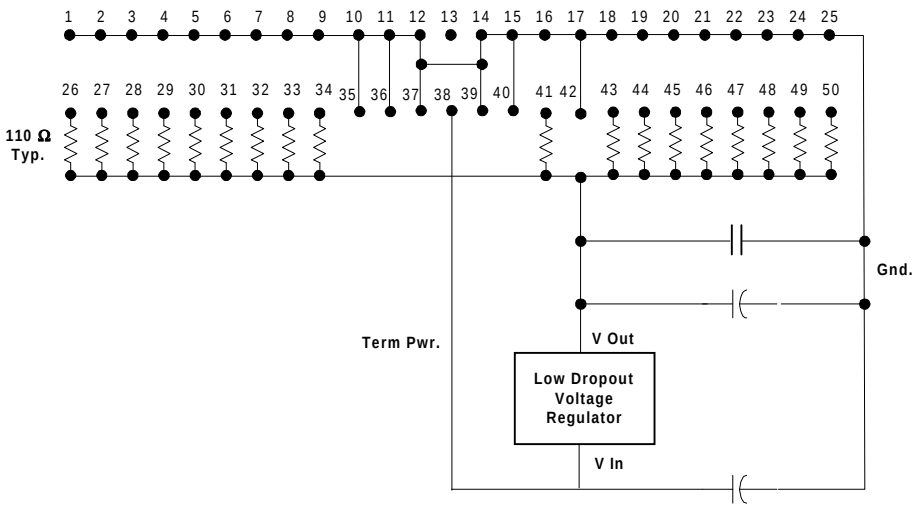

A649D514.wmf

1.4 HARD DISK

The machine is provided with an IDE hard disk.

The following features use the hard disk:
- PostScript
- Input spooler
- Reverse Order Output

The hard disk is used to spool, and print input data, and store image data as required for reverse order output or duplexing.

1.4.1 Partitioning

The hard disk partitioning is used as follows:
- Permanent Partition: not used
- Temporary Partition: used for storage of data that is not maintained across power cycles. This partition contains files for the input spooler and reverse order printing. This partition is reformatted during system initialization following a printer reset or power cycle, or by an explicit command received from the SP3 operation panel.
- PostScript Partition: used exclusively by the PostScript option. This separate partition allows PostScript to format its disk as required by the PostScript command programs without affecting the other disk partitions.

1.4.2 Capacity

The following lists the space allocated to each partition by the disk drive:

Partition	Percentage
Permanent	10%
Temporary	80%
PostScript	10%

1.5 VIDEO INTERFACE

The SP3 controller sends the video data to the laser driver unit through the EX-IPU, and directly drives the laser diode.

2. FEATURES

2.1 MULTIFUNCTION OPERATION

2.1.1 Share Mode

Overview

Share mode allows copying, printing, and scanning. If there is no printing or scanning function being performed, the control panel shows the copier screen and copying functions are allowed.

Entering Printer Mode

The SP3 control panel may transition to the printer screen in two different ways.

- When input from any of the external I/O ports,(parallel, serial, or network interface) is processed and requires the usage of engine resources, the printer controller requests control of the print engine.
- The user may also initiate the display of the printer control panel by pressing the scanner/printer button. If a copy job is in progress the job will complete before the control panel changes to the printer screen.

Note that even if the control panel shows the copier screen the printer may be online. The online/off-line status is indicated by the online LED. Whenever the printer is online it is capable of receiving incoming print data.

When the Printer/Scanner key is pushed or the SCU receives an MF (multifunction) mode transition request from the SP3 Controller, the SP3 will shift to MF mode and the SCU will display the MF mode screen. However, it is impossible to shift to MF mode in the following cases.

During a copying operation
In Interrupt Copy mode
During an error condition at the engine side (SC occurrence, jam, etc.)
While setting an SP (Service Program) or UP (Utility Program) mode

Otherwise, the On Line LED blinks when the SP3 Controller is initializing, and this LED is turned on when the SP3 Controller becomes available.

Operation Panel

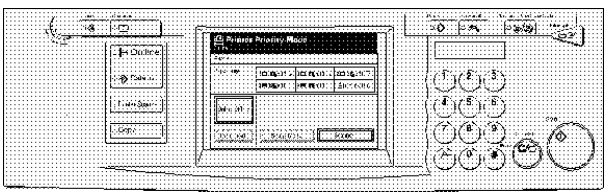

A649D512.img

Copy Mode Screen

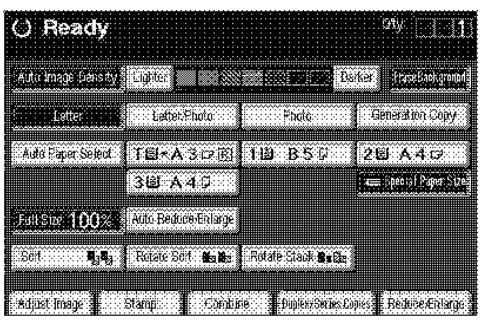

A649d511.img

Share Mode Screen

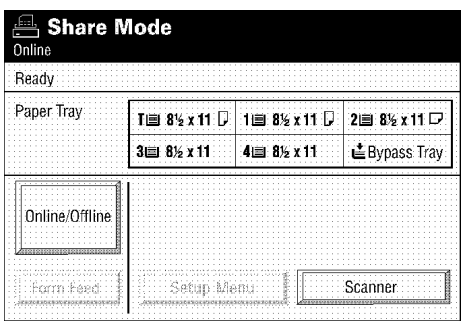

A649D513.img

Return to Copy Mode

When the printer screen is displayed on the control panel, the user can return to the copier functions by pressing the Copy button. At this time, the printer controller will finish the current job that it is working on, scanner or printer job, and then release the engine resources. Any remaining jobs in the printer controller pipeline will remain queued until the printer controller regains control.

Interrupt Copying

If while printing, an interrupt copy request is made, the data flow out of the interpreter to the video is halted at a suitable page boundary.

When the current page being printed in the engine has exited to the appropriate output bin, the copy job can proceed. When the copy job is finished, the interpreter will continue where it left off and finish the print job.

Host data input continues to be spooled during copying. When the interrupt copy is complete the print job will resume printing from where it left off.

If a duplex job is in progress when an interrupt copy takes place, the pages in the duplex bin will remain there. The interrupt copy job is not allowed to use the duplexer.

Scanner Jobs

In order to initiate a scanning job, the control panel must already be displaying the printer screen. The scanner soft button is pressed to request a scanner job. When the current print job is complete, the scanner job may be initiated from the host PC.
While the scanner mode screen is displayed the printer is off-line.

2.1.2 Printer Only Mode

In this mode, only printing is allowed. If the user presses the copy or interrupt copy key, an error beep will sound. Scanning functionality is not available.

2.1.3 Scanner Only Mode

In this mode, only scanning is allowed. If the copy or interrupt copy button is pressed, an error beep will sound. During scanner only mode, the printer is offline.

2.1.4 Printer Priority Mode

This mode works the same as multifunction mode except that interrupt copying is not allowed.

2.2 PCL5E PRINTING

The SP3 controller provides PCL5E compatibility conforming to the PCL5 Technical Reference Manual.

The ROM resident font data contains PCL5E font data, consisting of 45 scaleable typefaces in 14 typeface families (35 Intellifont format and 10 TrueType format fonts). In addition, 6 bit mapped typefaces in the Line Printer typeface family are available. The bitmapped fonts are created for 300 dpi, and scaled for 600 dpi as necessary.

The Transparent Font Manager (TFM) is compatible with HP downloadable and scaleable soft-font formats.

2.3 POSTSCRIPT PRINTING

The SP3 controller supports Adobe PostScript Level II, as defined in the PostScript Language Reference Manual and the PostScript Language Reference Manual Supplement for Version 2015.

Downloading of PostScript Type 1 fonts is supported. PostScript includes a rasterizer for TrueType fonts which allow TrueType fonts to be downloaded as soft fonts. No resident TrueType fonts are supported. (Note: PostScript TrueType fonts and PCL5E TrueType fonts are accessible by the respective personalities).

2.4 SCANNER OPERATION

Memory Requirements

The host PC determines the amount of free memory available for scanning at any time. The amount of free memory sets a limit on the maximum number of pixels which may be imaged. Since the entire image is scanned into memory before any data is sent to the host, there must be enough available memory to contain the entire image. For example, an 8 1/2 x 11 inch page at 400 dpi contains 8.5 x 11 x 400 x 400 = 14,960,000 pixels. In black and white mode, 8 pixels are stored per byte, requiring 14,960,000/8 = 1,870,000 bytes of free memory. In grayscale mode, one pixel is stored per byte, thus 8 times as much free memory is required.

The amount of free memory available for scanning depends on the printer mode. The maximum amount of memory is available for scanning when the printer is in the scanning only mode. In all other modes, memory is shared with the printer languages. The amount of free memory will vary greatly when memory is shared as memory is allocated and deal located for fonts and the internal working storage requirements of the active languages.

Pixel Limitation

Because of the EX-IPU capability, this scanner can scan up to 4672 pixels in the main scan, and 6803 pixels in the subscan.

Example: DLT size at 400 dpi

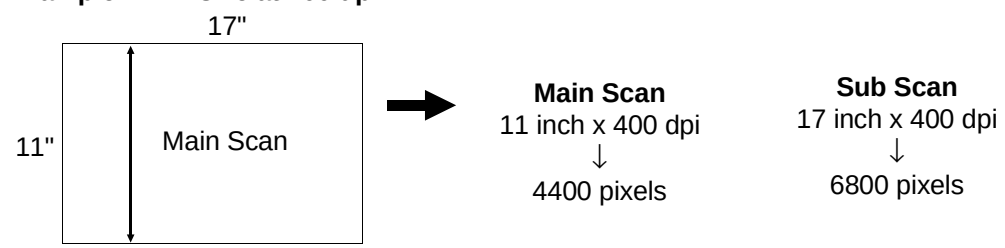

Example: LT size at 500 dpi

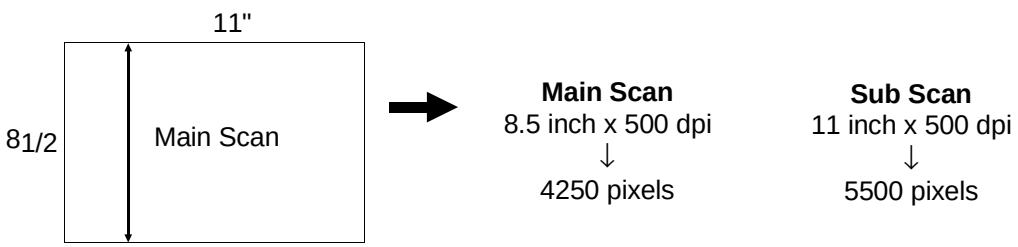

The following tables show the paper sizes that can be scanned at various resolutions.

The values show the amount of free memory on the controller board that is required to scan the image. (More free memory is available in Scanner Only mode.)

Black/White

Unit = MB

Paper Size	Resolution							
	100	200	400	600	800	1000	1200	1600
A3	0.3	1.0	3.8					
A4	0.2	0.5	1.9					
A5	0.1	0.3	1.0	2.2	3.8			
A6	0.1	0.2	0.5	1.1	1.9	3.0		
A7	0.1	0.1	0.2	0.5	0.9	1.4	1.9	3.5
LG	0.2	0.6	2.4					
LT	0.2	0.5	1.9					
HLT	0.1	0.3	1.0	2.1	3.7			
Photo 4x6	0.1	0.1	0.5	1.1	2.0	3.0		
Photo 3x5	0.1	0.1	0.3	0.7	1.2	1.9	2.7	

Gray Scale

Unit = MB

Paper Size	Resolution							
	100	200	400	600	800	1000	1200	1600
A3	1.9	7.6	31.0					
A4	1.0	3.8	15.5					
A5	0.5	1.9	7.6	17.0	30.9			
A6	0.3	1.0	3.8	8.7	15.4	24.0		
A7	0.1	0.4	1.7	3.9	6.9	10.8	15.5	27.6
LG	1.2	4.7	18.7					
LT	1.0	3.7	14.7					
HLT	0.5	1.9	7.4	16.8	29.6			
Photo 4x6	0.3	1.0	3.9	8.6	15.3	24.0		
Photo 3x5	0.2	0.6	2.4	5.4	9.6	15.0	21.6	

Paper size in the shaded areas cannot be scanned.

A649D520.wmf

Entering a Scanner Session

A scanner session may be initiated in scanner only mode, or during multi function mode or printer priority mode at a job boundary. Scanning is initiated by an operation at the control panel. Once the scanner session has been initiated at the control panel, everything is driven from the SCSI host via SCSI commands.

Ending a Scanner Session

Upon completion of a scanner operation, the user terminates scanner mode using the control panel. If the SP3 controller is in multifunction mode or printer priority mode, and no SCSI commands are received within a time-out period, SCSI mode will be exited automatically.

2.4.1 Scanner Command/Data Flow

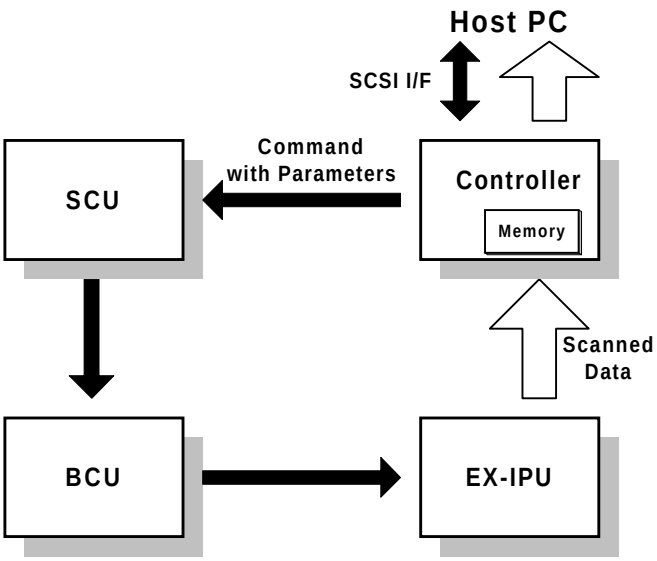

A649D519.wmf

2.5 AUTO-PORT SWITCHING

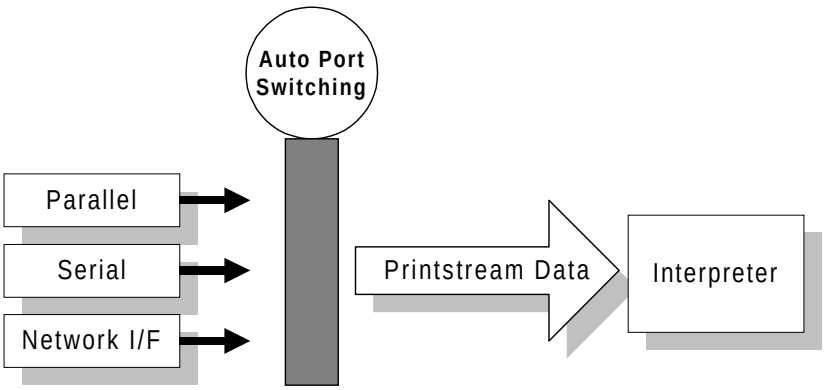

A649D502.wmf

The SP3 controller supports "auto-switching" between all active inputs.

At any instant in time, there is a current active port, and all of the other ports are in a blocked condition. When the current active port stops receiving data from a host computer, the port time-out becomes active.

If more data is not received from the host for the user specified port time-out, the machine monitors all ports, and any port with data can become active on a "first come first serve" basis.

Each port can have a different port time-out values, selectable by the user.

2.6 AUTOMATIC PRINTER LANGUAGE SWITCHING

The SP3 controller can change the page description language (PCL or PostScript) for the print job automatically, if the personality setting is "Auto".

2.6.1 Printer Language Switching Methods

The following methods are shown in order of priority in which the SP3 controller performs printer language switching.

1. Using the particular PJL ENTER command
2. Using intelligent personality selection
3. Default for the system (PCL)

2.6.2 PJL Entry Commands

PJL functions as a job control language where commands are inserted in the print stream. One of its capabilities is to provide explicit selection of a particular personality.

2.6.3 Intelligent Personality Selection

When performing intelligent personality selection, the SP3 controller may scan up to 512 bytes of the printer-stream data to make its decision. If the SP3 controller cannot decide after scanning 512 bytes, then it resorts to the next highest priority selection method available.

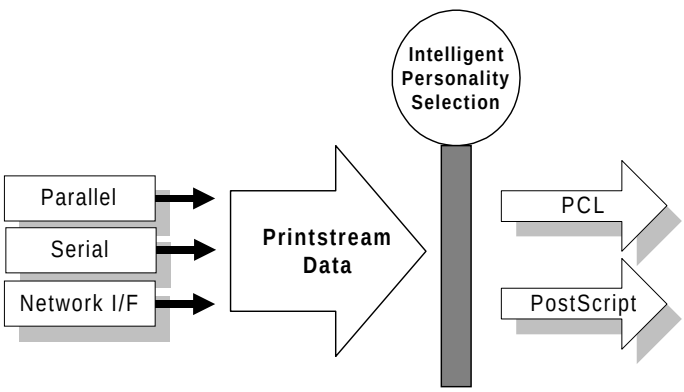

A649D503.wmf

2.7 POWER-UP SELF DIAGNOSTICS

When the SP3 controller board powers up it performs a self diagnostic sequence of tests.

First, the on board DRAM is checked, then the presence of any add-in DRAM SIMM is determined, and is checked. The on-board flash ROM is checked next, then the presence of add-in ROM SIMM is determined, and the add-in ROM SIMM is checked.

The presence of the HDD is determined. The HDD is examined to see if it has previously been partitioned. During scanner only mode, the printer is offline.

After these tests are completed, the SP3 controller MF software modules initialize thier individual modules, including I/O channels.

Four LEDs located on the main controller board are used to display the progress of the self test and to display any errors that have occurred.

2.8 NETWORK

The SP3 can receive print jobs over a network.

The network interface card (NIC) takes up one user slot on the network, and is treated as a printer server.

2.8.1 Flash Memory Software Upgrade

The printer server software is in Flash Memory on the NIC and can be upgraded in one of the following ways.

1. Remote Downloading Software via TFTP (refer to the Network Printer Manager manuals)
2. The DOS Flash Update Utility.

3. PAGE IMAGE DATA HANDLING

3.1 HARD DISK USAGE FOR PAGE IMAGING

This page image data is compressed to reduce the size required for the disk data, and more importantly, to provide faster retrieval speeds for page image data. The SP3 compresses the data by 4 to 10 times.

3.2 EDGE SMOOTHING PROCESSOR

In the SP3 controller, video data from the A7 is enhanced by the edge smoothing processor.

The Edge Smoothing Processor converts 1-bit monochrome video data into multi-bit grayscale video data, using a smoothing algorithm.

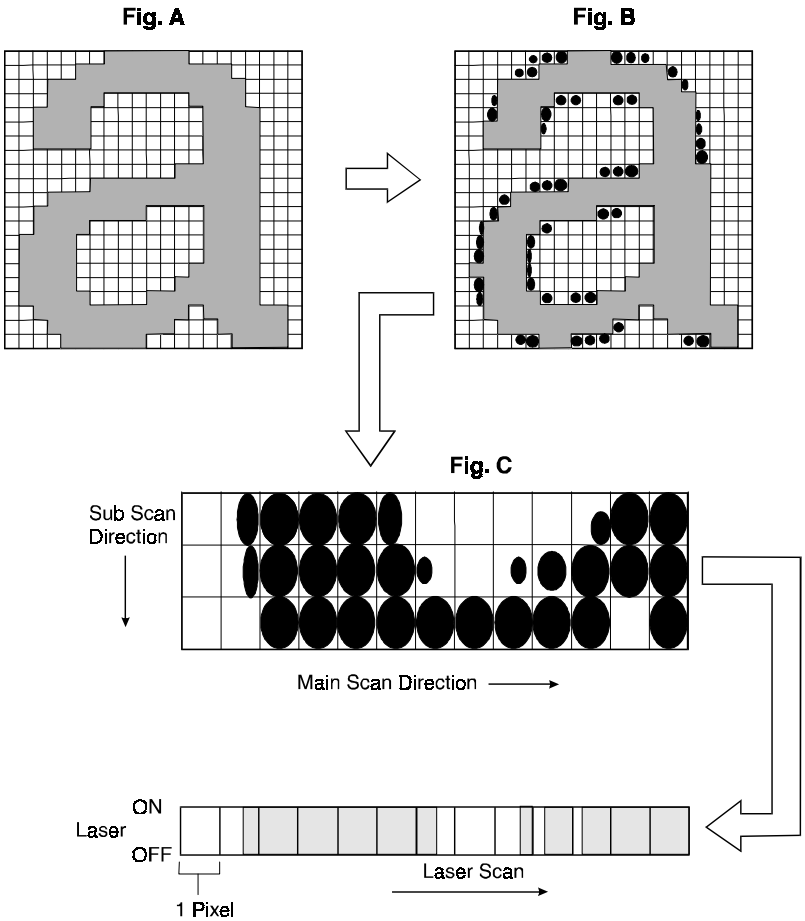

A649D510.wmf

The video data from the A7's Print Engine Video Controller generates the jagged outline on images as shown in the above left illustration. The edge smoothing processor smoothes the jagged outline.

4. PRINT OUTPUT

4.1 SIMPLEX PRINTING

Simplex printing is available in normal and reverse order.

4.1.1 Normal Order Printing

In normal order printing, the pages are printed in the order in which they are received. This is the fastest mode, as the data is not stored to the hard disk before printing.

Normal order printing is available with all output options. If multiple copies are requested, multiple copies of the first page are printed, then multiple copies of the second page are printed and so on.

4.1.2 Reverse Order Printing

In reverse order printing, the entire job is buffered to the hard disk drive; the last page is printed first, then second to last, and so on. The output is face up with page number one on top.

Reverse order printing is available with all options. If multiple copies are requested, the copies are always sorted. The entire document will be retrieved from the hard disk and printed in reverse order for each copy. If job separation is on, the copies will be separated.

4.2 DUPLEX PRINTING

4.2.1 Overview

Duplex printing is available with all output bin options.

Duplex printing is available in two binding methods.

- Short-edge binding refers to horizontal binding across the short edge of the paper. Short-edge binding will produce a sheet where the top margin is on opposite edges for the sheet for the front and back sides of the page.
- Long-edge binding refers to vertical binding along the long edge of the paper. Long-edge binding has the effect of the top margin being on the same edge of the sheet for both the front and back sides of a page.

Duplex printing is not available for all paper sizes. Refer to the specifications section of the base copier manual for the paper sizes that can be duplexed. If a job specifies duplex but the paper size to be used is not usable in the duplex tray, the job will be printed simplex reverse order.

All pages routed to the duplex bin must be the same size. If the page size changes during a duplex job, a new collation set is started. The copy count for a collation set within a duplex job is the copy count of the back side of the last page (print stream order) within that collation set.

4.2.2 Page Output Order

In duplex printing with a single copy, the output is face up with the first page on top. An eight-page job is printed as follows; ’HDD’ means ’hard disk drive’.

1) Page #1 is imaged and stored in the HDD
2) Page #2 is imaged and stored in the HDD
3) Page #2 is printed to the duplex tray
4) Page #3 is imaged and stored in the HDD
5) Page #4 is imaged and stored in the HDD
6) Page #4 is printed to the duplex tray
7) Page #5 is imaged and stored in the HDD
8) Page #6 is imaged and stored in the HDD
9) Page #6 is printed to the duplex tray
10) Page #7 is imaged and stored in the HDD
11) Page #8 is imaged and stored in the HDD
12) Page #8 is printed to the duplex tray
13) Page #7 is retrieved from the HDD and printed from the duplex tray
14) Page #5 is retrieved from the HDD and printed from the duplex tray
15) Page #3 is retrieved from the HDD and printed from the duplex tray
16) Page #1 is retrieved from the HDD and printed from the duplex tray

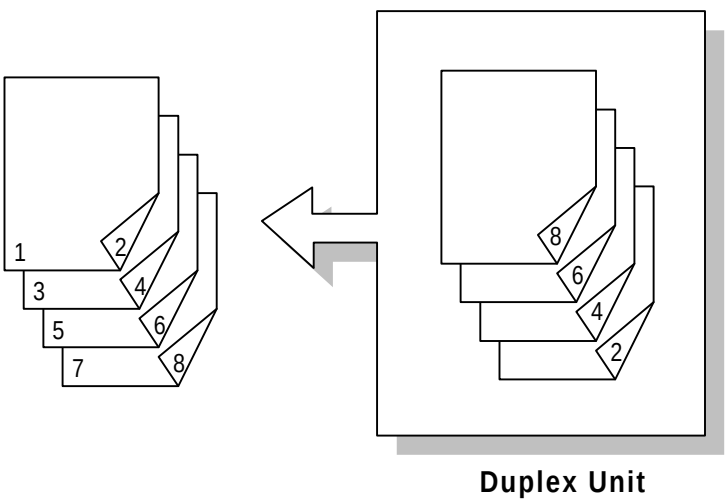

A649D506.wmf

If there are more than 100 sheets in the original, the first 100 sheets (50 duplex-printed pages) are printed as above, then the next 100 sheets are processed. Each set of 100 sheets forms a collation set as described above.

If multiple copies are requested, the steps above are executed for the first copy. The following copies are printed as described below.

1) Page #2 is retrieved from the HDD and printed to the duplex tray
2) Page #4 is retrieved from the HDD and printed to the duplex tray
3) Page #6 is retrieved from the HDD and printed to the duplex tray
4) Page #8 is retrieved from the HDD and printed to the duplex tray
5) Page #7 is retrieved from the HDD and printed form the duplex tray
6) Page #5 is retrieved from the HDD and printed from the duplex tray
7) Page #3 is retrieved from the HDD and printed from the duplex tray
8) Page #1 is retrieved from the HDD and printed from the duplex tray

If job separation is on, the copies are separated.

4.3 JOB SEPARATION

The type of job separation depends on the type of output bin installed and the collation set concept built in to the SP3 control software. Job separation sheets are inserted or staggered job separation is performed as described below. The usage of different bins for different functions, as described below, takes place irrespective of whether the SEPARATION parameter is on or off. The default value of SEPARATION is off.

If the standard output tray is installed, a separation sheet is inserted at the end of each collation set, and after each copy in a set of sorted copies.

If the finisher bin is installed, a separation sheet is inserted at the end of each collation set, and after each copy in a set of sorted copies.

If the 3-bin sorter is installed, the top bin will be used for copier jobs as a default, and the middle bin will be used for printer jobs. Job separation within a bin for the top bin will be staggered job separation, and a separation sheet will be used in the two lower bins.

A separation sheet is a piece of paper of the same size as the previous print job but of opposite orientation. If no sheet of opposite orientation is available in the printer, no separation sheet is inserted between jobs.

4.4 STAPLING

4.4.1 Overview

Stapling is only available when the 1-bin finisher is installed, and when the output order is REVERSE or DUPLEX.

The stapler can accommodate up to 50 sheets.

Stapling can only be performed on certain paper sizes.

Stapling should not be performed on jobs from the manual tray.

4.4.2 Stapling Modes

There are four stapling modes: one-staple portrait or landscape, and two-staples portrait or landscape.

If one-staple is selected, the staple appears in the top left hand corner of the paper for portrait or landscape modes. If two staple is selected, two staples are inserted along the left edge or top edge of the image.

The printer controller will rotate all pages within a job that is being stapled as shown in the diagram below. As different pages within a job can have different orientations, the staple position will not necessarily reflect the diagrams below for all pages.

If a duplex document is stapled, the diagrams below apply to the odd-numbered sheets. The back side of the sheet will be oriented with respect to the front side of the sheet according to the BINDING parameter selected by the user.

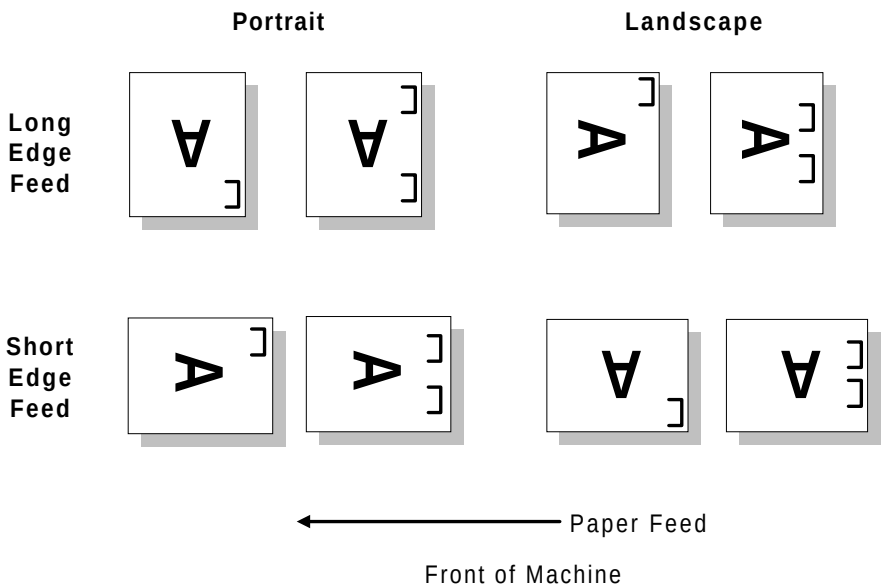

A649D507.wmf

4.5 JAM RECOVERY

4.5.1 Overview

If the jam recovery feature is on and a paper jam occurs, the controller will reprint all pages for which a sheet out indication has not been received from the engine. The necessary pages are retrieved from the hard disk drive and reprinted.

Jam recovery can be turned on and off from the control panel. If the JAMRECOVERY item in the Configuration Menu is on, the data for the page will be retained until the page exits the printer. This guarantees that all paper jams are recoverable. Due to the requirement to save all print data to disk if JAMREVCOVERY is on, printer performance may be lower when JAMRECOVERY is on for normal order printing.

If jam recovery is off, pages will not be reprinted in the case of a paper jam.

4.5.2 Jam Recovery for a Duplex Job

For a jam during a duplex operation, the pages not yet issued to the output bin should be reprinted.

Before automatic jam recovery begins, the user must remove the jammed sheets and the stacked sheets in the duplex bin.

4.5.3 Jam Recovery for a Stapling Job

For a jam during a stapling operation, only the pages not yet issued to the stapling stack should be reprinted.

Before automatic jam recovery begins, the user must remove the jammed sheets. The user must also remove the sheets stacked in the stapling stack but they should be kept as printed pages.

4.6 AUTO TRAY SWITCH

If Auto Tray Switch = ON

If the paper runs out in the middle of a job, the input trays are searched for another tray which has paper of the same size and orientation. When this is found, the machine uses the other input tray until all the correct size paper has run out.

If all the correct size paper runs out in the middle of a job, the message "No Paper. Add xx paper to Tray x." will appear. (xx: print paper size, x: the tray the last sheet was fed from.)
In this case,

1) If the user touches the "Reset" button, the print job will be canceled.
2) If the correct size of paper is add to one of the trays which are set to the correct paper size, the machine restarts the print job automatically, feeding the paper from that tray.
3) If when the user touches the "Continue" button without adding the correct size paper, the print job will be continued; feeding the paper from the specified tray even if the fed paper size does not match the print size.
4) If the user touches the "Continue" button but there is no paper in any trays, "No Paper. Add xx Paper to Tray x." will appear again. (xx: print paper size, x: the tray the last sheet was fed from.)

Auto Tray Switch = OFF

If the paper runs out in the middle of a job, the message "No Paper. Add xx Paper to Tray x." will appear. (xx: print paper size, x: the tray the sheet was fed from.)
In this case,

1) If the user touches the "Reset" button, the print job will be canceled.
2) If the correct size of paper is added to the tray, the machine restarts the print job automatically.
3) If the user touches the "Continue" button after adding the incorrect size of paper, the print job will be continued, feeding the paper from the specified tray even if the fed paper size does not match the print size.
4) If the user touches the "Continue" button without adding any paper to the tray, "No Paper. Add xx Paper to Tray x." will appear again. (xx: print paper size, x: the tray the last sheet was just fed from.)

SECTION 3

INSTALLATION

1. MAIN CONTROLLER BOARD

Machine Code: A649
(Printer Controller Type 401)

1.1 INSTALLATION PROCEDURE

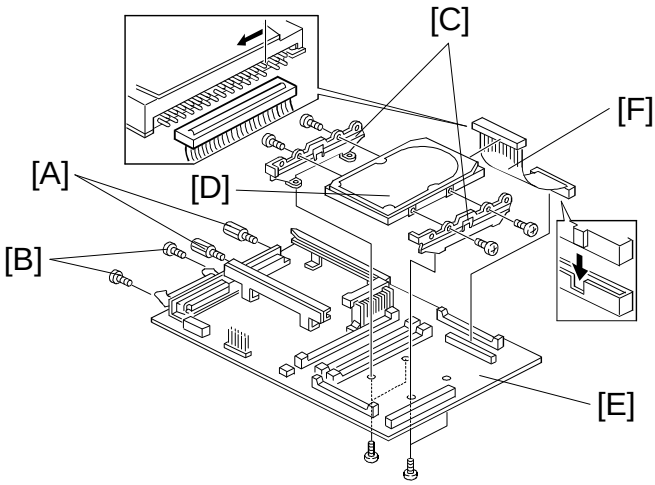

A649I500.wmf

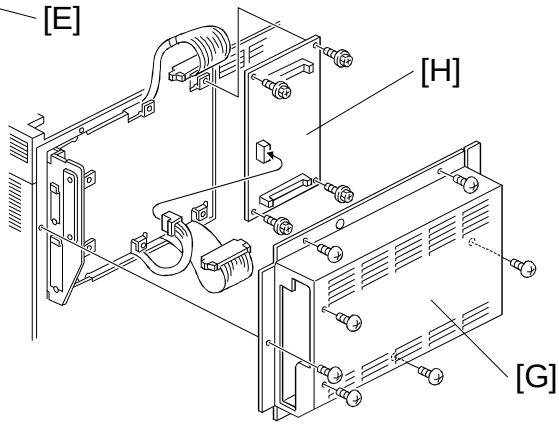

A649I501.wmf

⚠ CAUTION

Unplug the copier power cord before starting the following procedure.

1. Remove the hexagonal head screws [A] (2 screws) and the screw [B] (2 screws) from the main controller board.
2. Attach the HDD brackets [C] to the HDD [D] (4 screws).
3. Mount the hard disk on the main controller board [E] (4 screws).
4. Connect both ends of the harness [F].

   NOTE: Be sure the connector is placed as shown.
5. Remove the controller board cover [G] (7 screws).
6. Remove the dummy board [H] (4 screws, 3 connectors).

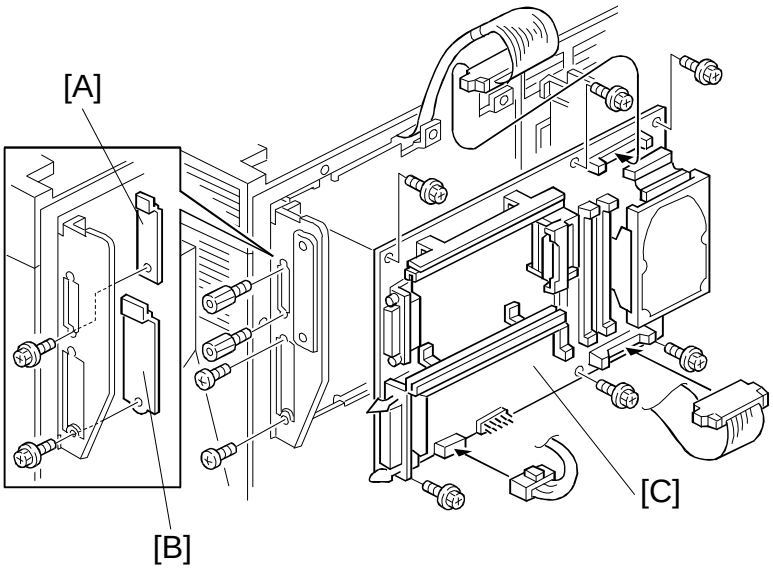

A649I502.wmf

7. Remove the serial connector cover [A] and parallel connector cover [B] (1 screw each).
8. Install the main controller board [C] on the machine (8 screws, 2 hexagonal screws, 3 connectors).
9. Put the controller board cover back on the machine (7 screws).

   NOTE: The controller board drops easily.

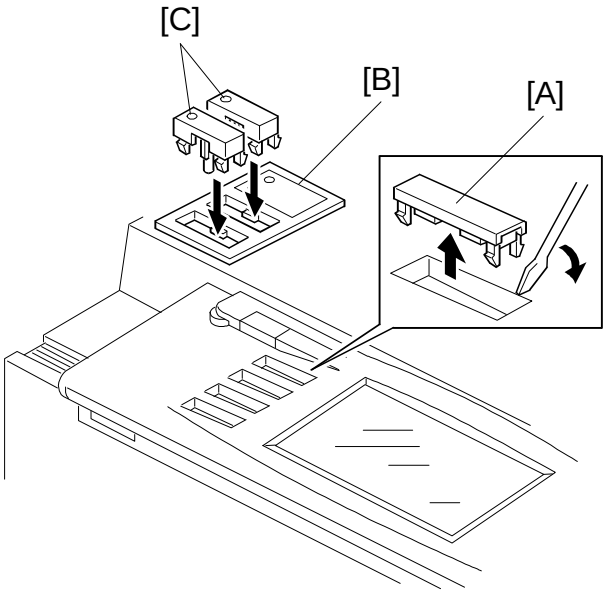

A649I503.wmf

–For the 120 V Version–

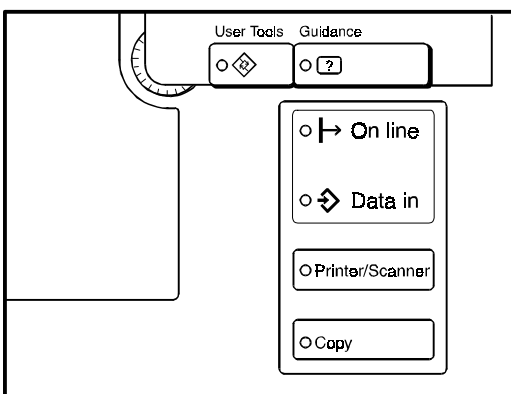

A649I504.wmf

–For the 230 V Version–

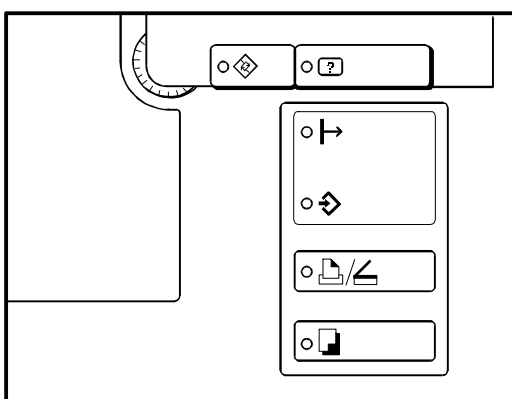

A649I505.wmf

10. Remove all key top covers [A] (4 covers).
11. Install the key top holder [B].
12. Install the key tops [C] (2 key tops).

    NOTE: Be sure the key tops are placed as shown.

For a parallel cable

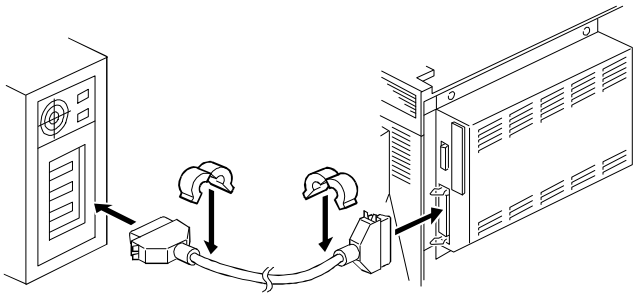

A649i509.wmf

For a serial cable

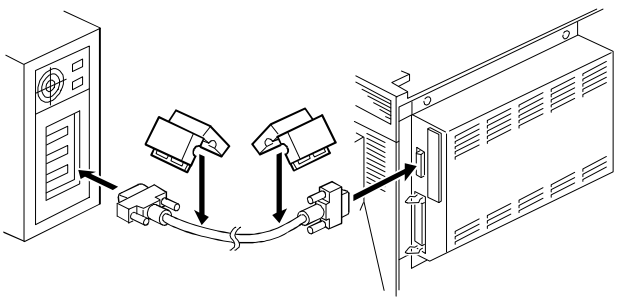

A649I510.wmf

13. Attach the ferrite cores to both ends of the printer interface cable as shown.

    NOTE: Be sure to use the ferrite core type shown.

2. POSTSCRIPT 2 KIT

Machine Code: A650
(PostScript 2 Kit Type 401)

2.1 INSTALLATION PROCEDURE

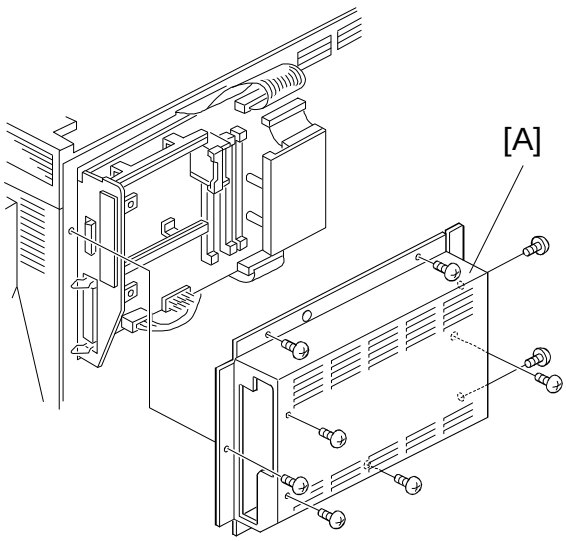

A650I500.wmf

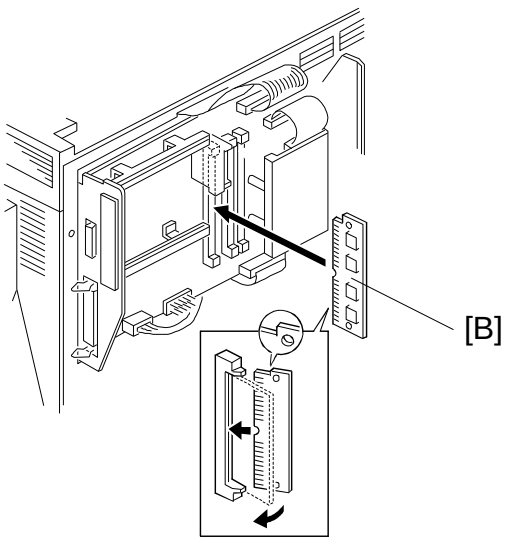

A650I501.wmf

⚠ CAUTION

Unplug the copier power cord before starting the following procedure.

1. Remove the controller board cover [A] (7 screws).
2. Install the postscript ROM board [B] as shown.
3. Put the controller board cover back on the machine (7 screws).

3. SCANNER KIT

Machine Code: A651
(Scanner Kit Type 401)

3.1 INSTALLATION PROCEDURE

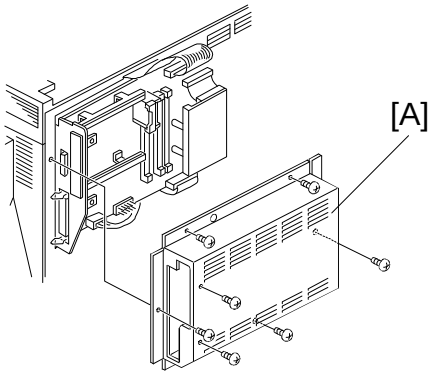

A651I500.wmf

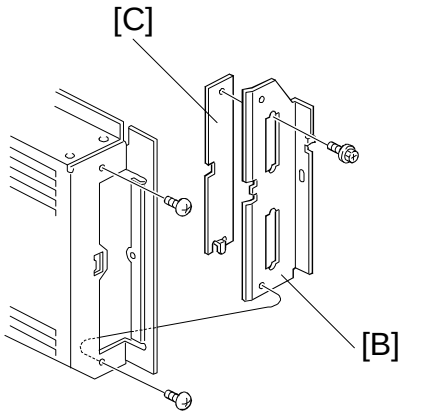

A651I501.wmf

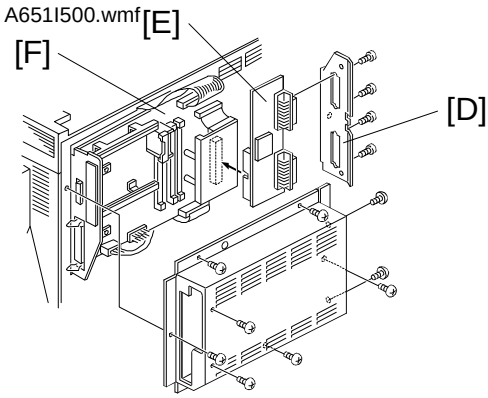

A651I502.wmf

NOTE: For ease of installation, the scanner board should be installed after installation of the other optional board(s) (main controller board, PS ROM board, RAM SIMM), but before installing the NIC.

⚠ CAUTION

Unplug the copier power cord before starting the following procedure.

1. Remove the controller board cover [A] (7 screws).
2. Remove the SCSI connector bracket [B] (2 screws) and the SCSI connector cover [C] (1 screw).
3. Install the SCSI connector bracket [D] on the scanner board [E] with 4 screws.
4. Mount the scanner board [E] on the main controller board [F] (1 connector).
5. Put the controller board cover back on the machine (9 screws).

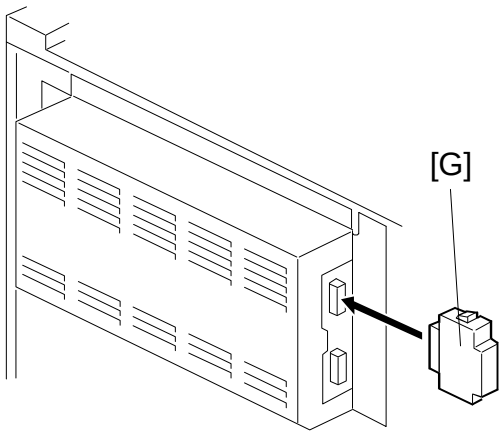

A651I503.wmf

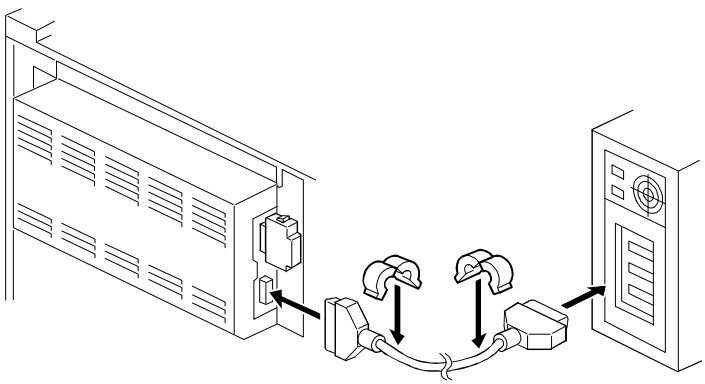

A651I504.wmf

6. Plug in the SCSI terminator [G].
7. Attach the ferrite cores to both end of the SCSI cable as shown after the user connects the cable.

4. NETWORK INTERFACE CARD

Machine Code: A732 - For Ethernet (NIC401-E)
Machine Code: A733 - For Token Ring (NIC401-TR)

4.1 INSTALLATION PROCEDURE

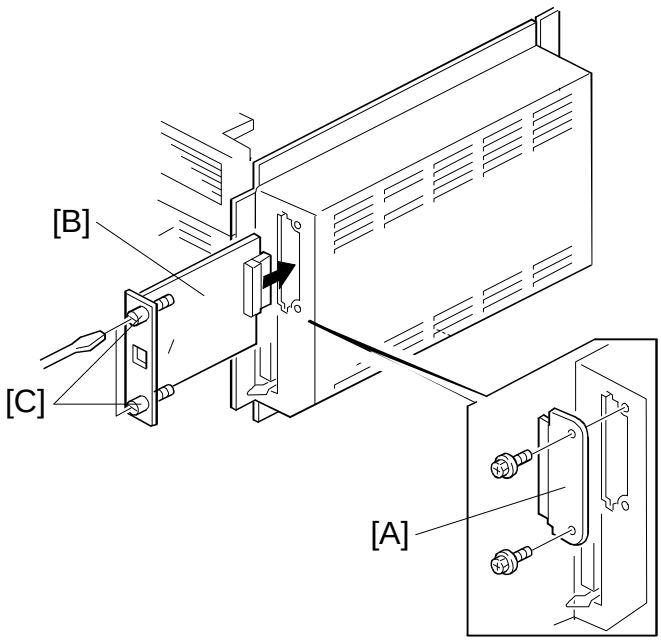

A732I500.wmf

NOTE: For ease of installation, the NIC should be installed after installing other optional board(s) (main controller board, PS board, RAM SIMM, scanner board).

⚠ CAUTION

Unplug the copier power cord before starting the following procedure.

Before installing the card, do the following:

- Write down the MAC address and the serial number of the card (see the User's Guide for Printer Servers, page 2-1).
- Token Ring cards only: Set the speed jumper to match the customer's network (see the User's Guide for Printer Servers, page 2-2).

1. Remove the NIC cover [A] (2 screws).
2. Install the network interface card [B].
3. Tighten the screws [C].

5. RAM SIMM OPTION

5.1 REQUIRED SPECIFICATION CHECK

Before installing the DRAM SIMM, confirm that it satisfies the requirements below.

Number of pins:	72 pins
Access speed:	70 ns or faster
Capacity:	8, 16, or 32 MB
Parity:	Any OK

5.2 INSTALLATION PROCEDURE

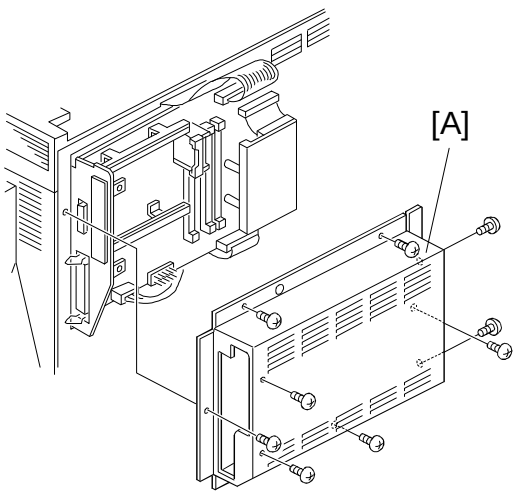

A000I500.wmf

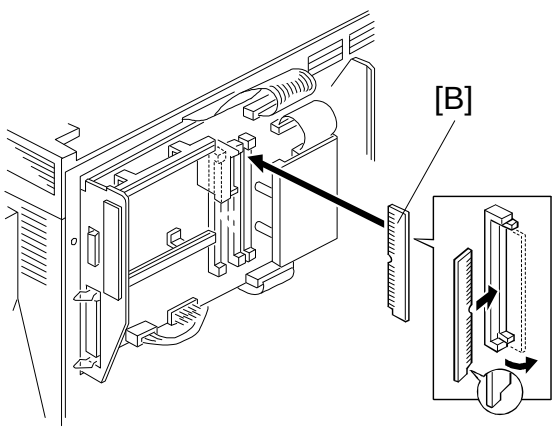

A000I501.wmf

⚠ CAUTION

Unplug the copier power cord before starting the following procedure.

1. Remove the controller board cover [A] (7 screws).
2. Install the RAM SIMM board(s) [B] as shown.
3. Put the controller board cover back on the machine (7 screws).

6. CONNECTING THE INTERFACE CABLES

6.1 PARALLEL INTERFACE

A bi-directional parallel cable is required to connect the printer controller to a host PC parallel port.

6.2 SERIAL INTERFACE

An RS-232C cross cable is required to connect the printer controller to a host PC serial port.
The figure below shows the wiring diagram of the RS-232C cross cable.

PC Side [20 pin connector]

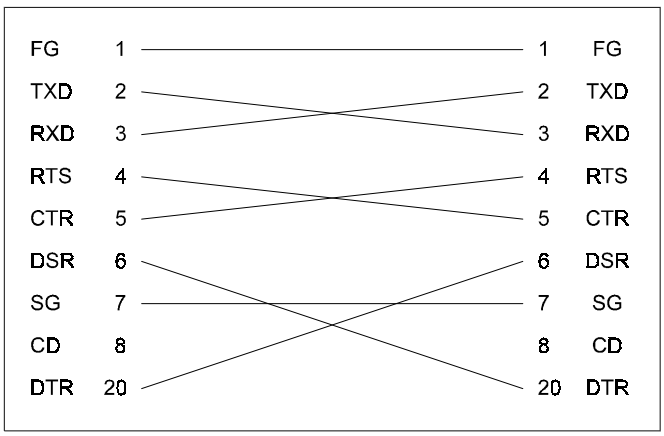

A649I507.wmf

PC Side [9 pin connector]

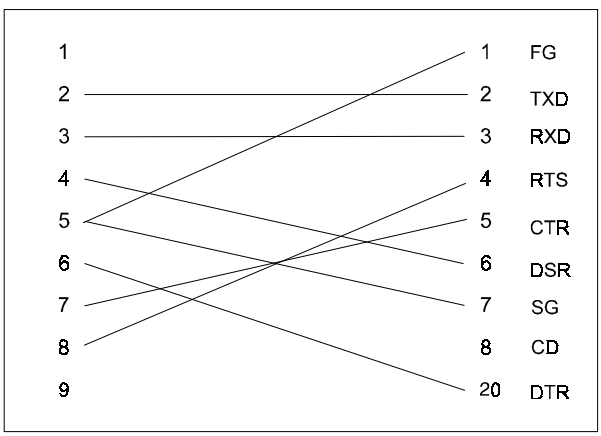

A649I511.wmf

6.3 NETWORK INTERFACE

A network cable (Ethernet 10 Base T cable,10 Base 2 cable, or TokenRing) is required to connect the Network Interface Card to the computer network.

After hardware setup, the network setup should be done by the user.

The setup procedure is described in the NIC manuals.

6.4 SCSI INTERFACE

The SCSI connection is a standard SCSI interface and requires a high density 50-pin SCSI cable and a SCSI port available on the host computer. In addition, you must provide and connect a SCSI terminator plug to one of the SCSI ports on the scanner board of the SP3, if the SP3 is at the end of the SCSI bus line.

NOTE: Before SCSI cable connection, the SP3 should be set with the appropriate SCSI ID using the SCSI ID Setting screen.

⚠ CAUTION

Before plugging in the SCSI cable, make sure that both the machine and host computer are turned off.

1. Plug one end of the high density 50-pin SCSI cable into one SCSI port on the scanner board of the SP3.
2. Plug the other end of the SCSI cable into the SCSI port on the host computer or other peripheral.
3. Plug the SCSI terminator into the other SCSI port on the scanner board of the SP3, if the SP3 is at the end of the SCSI bus line.

   NOTE: 1) Advise the user to locate the SP3 at the end of the SCSI line, and plug the SCSI terminator into the end of the SCSI bus line.
   2) If the SP3 is not located at the end of the SCSI line, the SCSI device at the end of the SCSI bus line has to be turned on to supply the SCSI termination power for the SP3.
4. Attach the ferrite cores to both ends of the SCSI cable.

NOTE: The SCSI cable is not supplied with the scanner kit.

7. CONFIGURATION PARAMETER SETTINGS

The configuration parameters can be set through the control panel by the user.

NOTE: For the control panel settings, refer to the user manual.

PCL Menu

Orientation
Form Length
Font Source
Font Number
Point Size
Pitch
Symbol Set
Reset to Save

PostScript Menu (**Note:** This menu will appear if a PS board is installed.)

Printer Errors

Feeder Menu

Page Size
Input Tray
Auto Tray Change
Bypass Tray Time-out
Output
Staple
Separation
Binding

Parallel Menu

Personality
Bidirection

Serial Menu

Personality
Baud Rate
Parity
Handshake
DTR Polarity
Stop Bits
Data Bits
I/O Time-out

Network Menu (**Note:** This menu will appear if an NIC is installed.)

I/O Time-out

Configuration Menu

Resolution
Copies
Jam Recovery
Auto Continue
Spooling
Smoothing
Mode
SCSI ID (**Note:** This menu item will appear if a scanner board is installed.)

8. CHECKING THE CONNECTIONS

8.1 CONNECTION BETWEEN MAIN CONTROLLER BOARD (and related options; PostScript ROM, Scanner Board, RAM SIMM, NIC) AND THE COPIER ENGINE

1. Plug in the power cord and turn on the main switch.
2. Press the Printer/Scanner button to enter the printer/scanner mode.
3. Press the Online/Off-line button to enter off-line mode.
4. Press the Setup Menu button to enter the setup menu screen.
5. Press the Test Menu to enter the test menu screen.
6. Press the Print button to print out the Print Self Test.

NOTE: For more detailed information about the control panel settings, refer to the user manual.

The self test page is like the following.

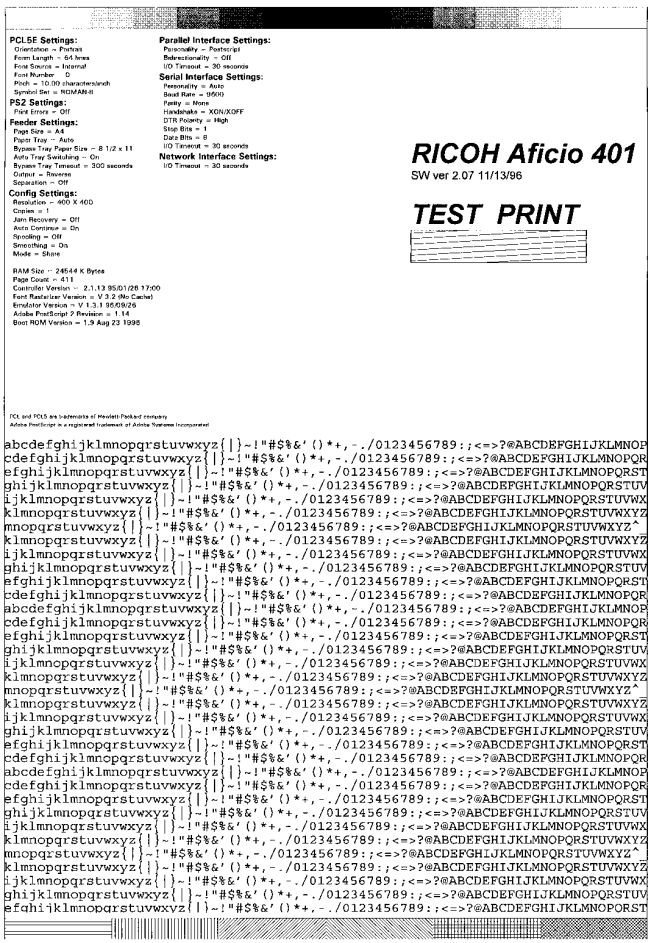

A649I506.img

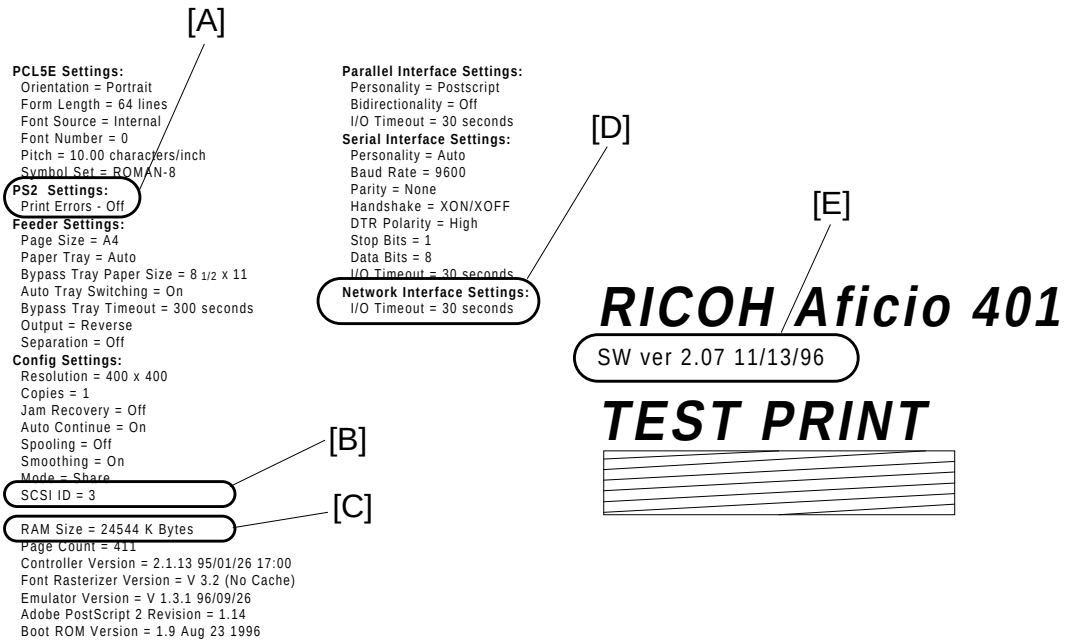

A649I508.wmf

Check the following:

- For the main controller board, confirm that the machine prints the test page.
- For the PostScript option, confirm that the self test page includes "PS2 Settings" [A] in the Setting Menu.
- For the scanner option, confirm that the self test page includes "Config. Settings - SCSI ID" [B] in the setting menu.
- For the RAM SIMM, confirm that "RAM Size" [C] printed on the self test page shows the size of the module just installed, plus 8 Mbytes.
- For the NIC, confirm that the self test page includes "Network Interface Settings-I/O Timeout" [D] in the setting Menu.
- For the system software version, check "SW ver XXX" [E].

If any problem occurs in the above checks, reinstall the printer controller and other options, then set up the machine again and test again.

8.2 Connection Between Main Controller Board and related the Network Interface Card

There are three ways to check the connection between the main controller board and the network interface card.

- To check that the self test page includes "Network Interface Setting".
- To check "Network Interface Settings:" in the Setting Menu on the Self Test Page.
- To print out the Network Interface Configuration Sheet with the network information.

8.2.1 Printing the Network Interface Configuration Sheet

NOTE: Before printing the Network Interface Configuration Sheet, the SP3 printer should be available (e.g., in the printer mode).

1. Remove the LAN cable from the NIC of the SP3.
2. Turn on the main switch.
3. Switch to the printer menu, and keep the machine on line.
4. Within approximately 2 minutes, the configuration sheet will be printed automatically.

NOTE: If the SP3 does not print the Network Interface Configuration Sheet, you can check the Network Menu through the Setting Menu.

If any problem occurs during the above steps, reinstall the printer controller and other options, then set the machine up again and test again.

SECTION 4

SERVICE TABLES

1. SERVICE REMARKS

⚠ GENERAL CAUTION

Do not turn off the machine or switch the controller off-line when the data LED is blinking or is lit, or the data which has been sent to the controller will be lost. If you need to do this, ask the customer for consent.

⚠ GENERAL NOTE

If the machine can print the self test page to record the previous customer setting, do this before starting any service operation.

1.1 HARD DISK DRIVE

Like the HDD for a PC, the HDD is very sensitive to vibration. Avoid any vibration.

1.2 HARD DISK FORMATTING/REPLACEMENT

The maintenance menu has utilities to format the PCL or PS area of the disk.

If the hard disk is formatted or replaced, the stored data (macros) will be erased.

If you need to do this, ask the customer for consent.

After this operation, advise the customer to store data again, if necessary.

1.3 BOARDS, RAM SIMM, ROM SIMM

The Controller Board, scanner board, ROM SIMM, and RAM SIMM are very sensitive to static electricity. Keep these parts away from static electricity.

1.4 REPLACING THE CONTROLLER BOARD

If you replace the controller, the previous settings will not remain.

The settings should be stored again by the customer.
If you need to replace the board, ask the customer for consent.

1.5 DOWNLOADING SYSTEM SOFTWARE

System software can be downloaded from a PC via the parallel port. (See Section 2.3 "Download New System Software")

If you do this, all the settings will be reset to the factory defaults.

1.6 RESET MENU

There are reset menus (menu reset, system reset) under the Reset Menu in the Setup Menu on the SP3 operation panel.

If you do a reset, all or some settings will be reset to the factory defaults.

2. MAINTENANCE MENU

2.1 INTRODUCTION

The Maintenance Menu is used to perform the following controller maintenance functions.

1) Download New System Software
2) Download New PostScript Software
3) Format the Disk (PCL area)
4) Format the Disk (PostScript area)
5) Update the Key Operator Code

2.2 HOW TO ENTER THE MAINTENANCE MENU

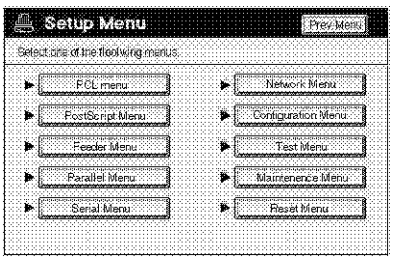

A649M503.img

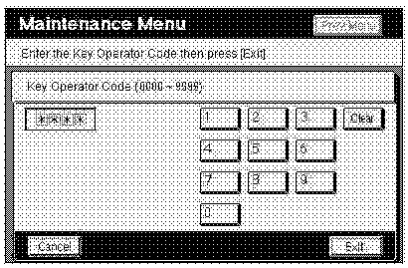

A649M502.img

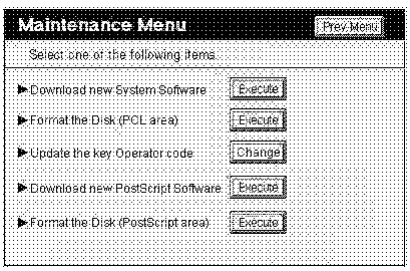

A649M501.img

1. Plug in the power cord and turn on the main switch.
2. Press the Printer/Scanner button to enter the printer/scanner mode.
3. Press the Online/Off-line button to enter Off-line mode.
4. Press the Setup Menu button to enter the setup menu screen.
5. Press the Maintenance Menu button to enter the Key Operator Code screen.
6. Enter the Key Operator Code to enter the maintenance menu screen.
   The Key Operator Code for a service engineer is "2463".
   Then, press the "Exit" button.
7. Select the maintenance item.

Service Tables

2.3 DOWNLOAD NEW SYSTEM SOFTWARE

Download New System Software is used to update the controller system software from the personal computer through the parallel cable.

2.3.1 Preparation

- Provide the DOS based computer with a parallel port (LPT1 is used by default)

  NOTE: MS-DOS or PC-DOS is required on the PC.
- Provide a standard parallel cable to connect the computer to the SP3.
- Provide new system software to download from the computer
- Provide the SCOPY program. (command file)

2.3.2 How to download new system software

NOTE: Before doing this, remove all printer/network cables from the SP3.

1. Check that the parallel cable is properly connected to the downloading computer.
2. Turn on the SP3, then turn on the computer.
3. Copy the new system software file to the computer's hard disk.
4. Check the location of SCOPY.EXE on the computer.
5. Check the name of the printer port to which the parallel cable is connected (LPT1, LPT2, or other).
6. After the DOS prompt appears, change directory to perform the SCOPY.EXE command, if necessary.
7. On the SP3, enter the Maintenance Menu through the control panel. Refer to the "How to enter the Maintenance Menu" section.
8. On the SP3, press the "Execute" button in the "Download new system software" screen. The control panel displays the following message:
   "Are you sure you want to Download New System Software?"
   If the computer is ready to upload the software, press the "Yes" button.

9. On the computer, type the following at the DOS prompt in the directory where SCOPY.EXE is.
   SCOPY (space)[Path]File name(space)[Port Name]

   Example:
   c:\SCOPY 201r.img [LPTx]

   If you use LPT1, it is not necessary to include LPT1 in the command line.
   However, if LPT1 is already in use, input another parallel port name here, such as LPT2.

10. Press the "Enter" key on the computer
    - The SP3 control panel displays the following message during software downloading.
      "Downloading New System Software"
      The computer displays the following:
      [e.g.]
      c:\SCOPY 201r.img
      Please wait.
      Downloading new software.

      ****
      Check control panel.
      Confirm successful downloading.
      c:\

⚠ CAUTION

Do not press any key or turn off the machine before confirming that the software download was successful on the SP3 control panel (i.e., until the following message is displayed).

Within approximately 5 minutes, the displayed message will be changed to the following message on the SP3 control panel automatically.
"System Flash Download is successful
Power machine off and then on to restart."

NOTE: Depending on the PC configuration, the time to complete downloading software may differ.

11. After confirming a successful download, turn off and restart the machine.

12. Print out the Print Self Test to check the software version. (Refer to the Checking the Connections Section.)

    NOTE: If the job cannot be completed, it may be necessary to change the LPT configuration.

Service Tables

2.4 DOWNLOAD NEW POSTSCRIPT SOFTWARE

Download New PostScript Software is used to update the PostScript software from the personal computer through the parallel cable.

2.4.1 Preparation

- Provide the DOS based computer with a parallel port (LPT1 is used by default).

  NOTE: MS-DOS or PC-DOS is required on the PC.

- Provide a standard parallel cable to connect the computer to the SP3.
- Provide new PostScript software to download from the computer.
- Provide the SCOPY program (command file).

2.4.2 How to download new PostScript software

NOTE: Before doing this, remove all printer/network cables from the SP3.

1. Check the parallel cable is properly connected to the downloading computer.
2. Turn on the SP3, then turn on the computer.
3. Copy the new PostScript software file to the computer's hard disk.
4. Check the location of SCOPY.EXE on the computer.
5. Check the name of the printer port to which the parallel cable is connected (LPT1).
6. After the DOS prompt is displayed on the computer, change directory to where the SCOPY.EXE command, if necessary.
7. On the SP3, enter the Maintenance Menu through the control panel. Refer to the "How to enter the Maintenance Menu" section.
8. On the SP3, press the "Execute" button in the "Download New PostScript software" screen. The control panel displays the following message:
   "Are you sure you want to Download New PostScript Software?"
   If the computer is ready to upload the software, press the "Yes" button.

9. Type the following at the DOS prompt in the directory where SCOPY.EXE is.
   SCOPY(space)[Path]File name(space)[Port Name]

   Example:
   c:\SCOPY mf3.img [LPTx]

   If you use LPT1, it is not necessary to include LPT1 in the command line.
   However, if LPT1 is already in use, input another parallel port name here, such as LPT2.

10. Press the "Enter" key on the computer
    - The SP3 control panel displays the following message during software downloading.
      "Downloading New System Software"

      The computer displays the following:
      [e.g.]
      c:\SCOPY mf3.img
      Please wait.
      Downloading new software.

      ****
      Check control panel.
      Confirm successful downloading.
      c:\

⚠ CAUTION

Do not press any key or turn off the machine before confirming that the software download was successful on the SP3 control panel (i.e., until the following message is displayed).

Within approximately 5 minutes, the displayed message will be changed to the following message on the SP3 control panel automatically.
"PostScript Flash Download is successful.
Power machine off and then on to restart."

NOTE: Depending on the PC configuration, the time to complete downloading software may differ.

11. After confirming that the download was successful, turn off and restart the machine.

12. Print out the Print Self Test to check the software version. (Refer to the Checking the Connections Section.)

    NOTE: If the job cannot be completed, it may be necessary to change the LPT configuration.

Service Tables

2.5 FORMAT THE DISK (PCL AREA)

This menu is used to format the PCL area on the hard disk (this is also known as the Permanent area).

2.5.1 Operation

NOTE: Before doing this, remove all printer/network cables from the SP3.

1. Turn on the SP3.
2. Enter the Maintenance Menu through the control panel.
   Refer to the "How to enter the Maintenance Menu" section.
3. Press the "Execute" button in the "Format the Disk (PCL area)" screen.
   The control panel displays the following message:
   "Are you sure you want to Format the Disk (PCL area)?"
   Press the "Yes" button.
   Then, the SP3 control panel displays the following message during formatting.
   "Formatting the Disk (PCL area)"
   After formatting, the displayed message will be changed to the following message automatically.
   "Formatting the Disk (PCL area) was successful.
   Power machine off and then on to restart."

⚠ CAUTION

Do not press any key or turn off the machine before confirming that formatting was successful (i.e., until the above message is displayed).

4. After confirming that formatting was successful, turn off and restart the machine.

2.6 FORMAT THE DISK (POSTSCRIPT AREA)

This menu is used to format the PostScript area of the hard disk.

If the hard disk is formatted, the stored data (downloaded fonts, macros) will be erased. So if you need to do this, ask the customer for consent.

After this operation, advise the customer to store their data again, if necessary.

2.6.1 Operation

NOTE: Before doing this, remove all printer/network cable from the SP3.

1. Turn on the SP3.
2. Enter the Maintenance Menu through the control panel.
   Refer to the "How to enter the Maintenance Menu" section.
3. Press the "Execute" button in the "Format the Disk (PostScript)" screen.
   The control panel displays the following message:
   "Are you sure you want to Format the Disk (PostScript)?"
   Press the "Yes" button.
   Then, the SP3 control panel displays the following message during formatting.
   "Formatting the Disk (PostScript)"
   The displayed message will be changed to the following message automatically.
   "Formatting the Disk (PostScript) was successful.
   Power machine off and then on to restart."

⚠ CAUTION

Do not press any key or turn off the machine before confirming that formatting was successful (i.e., until the above message is displayed).

4. After confirming that formatting was successful, turn off and restart the machine.

Service Tables

2.7 UPDATE THE KEY OPERATOR CODE

If the key operator code must be changed, use this menu item. The key operator code cannot be changed by the user.

When the operator intends to change the key operator code, it can be done by entering the old and new key operator codes at the ten-key pad. Both soft keys and hard keys are effective. The key operator code can be any four digits from 0 to 9. (The key operator code for a service man is "2463")

2.7.1 Operation

1. Turn on the SP3.
2. Enter the Maintenance Menu through the control panel.
   Refer to the "How to enter the Maintenance Menu" section.
3. Press the "Execute" button in the "Update the Key Operator Code" screen.
4. The current key operator code enter screen appears.
5. Enter the current key operator code, then press the Exit button.
   If the entered key operator code is correct, the New Key Operator Code input screen appears. If an incorrect key operator code was entered, the alert window appears.
6. Enter the new key operator code. Do not use "2463".
   Then push Exit. The key operator code confirmation screen appears.
7. Enter the new key operation code again to confirm your input.
   Then push Exit.

3. RESET MENU

3.1 INTRODUCTION

The Reset Menu is used to perform the following functions for controller maintenance.

1) Printer Reset
2) Menu Reset
3) System Reset

3.2 HOW TO ACCESS THE RESET MENU

1. Plug in the power cord and turn on the main switch.
2. Press the Printer/Scanner button to enter the printer/scanner mode.
3. Press the Online/Off-line button to enter Off-line mode.
4. Press the Setup Menu button to enter the setup menu screen.
5. Press the Reset Menu.

   NOTE: This menu is not protected by any key operator code. Any user can do this operation.

3.3 PRINTER RESET

Printer Reset cancels any print jobs being processed and returns the machine to the initial power-on state, but does not delete the spooled print jobs (except for the job currently in progress). Reset Printer does not change the menu settings.

3.4 MENU RESET

Menu Reset cancels most menu settings and returns them to their factory settings.

The following menu fields are not returned to the factory defaults.

Manual Size
Bidirection
Baud Rate
Parity
Handshake
DTR Polarity
Stop Bits
Data Bits
SCSI ID

3.5 SYSTEM RESET

All Reset functions are performed.

Menu Reset cancels any menu settings and returns them to their factory settings.

Page count and user password are not restored to zero with System Reset.

4. NETWORK INTERFACE CARD SOFTWARE UPGRADE

The printer server software in the Flash Memory can be upgraded using one of the following ways.

- Remote Downloading Software via TFTP. (Refer to the Network Printer Manager manuals.)

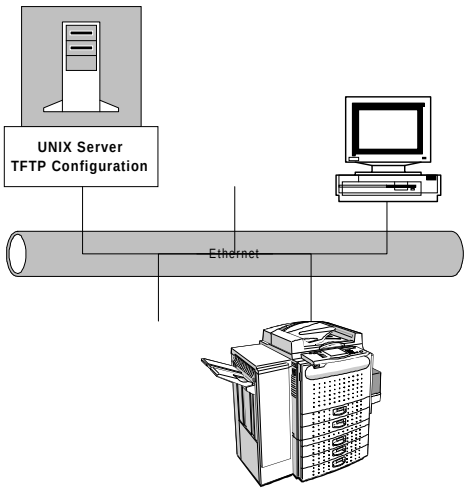

A649M507.wmf

- The DOS Flash Update Utility.

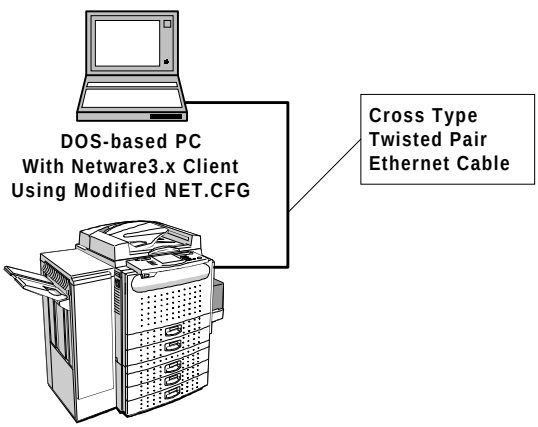

A649M508.wmf

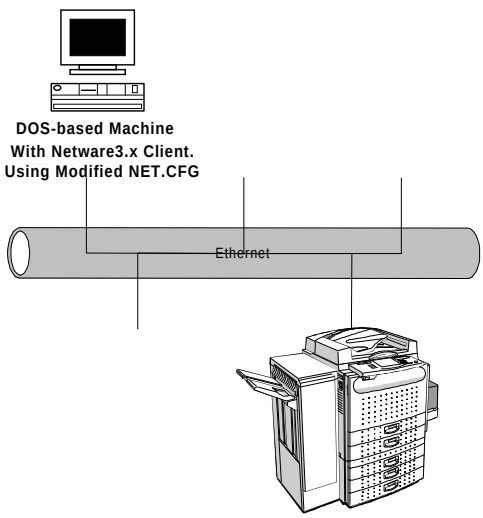

A649M509.wmf

Service Tables

4.1 DOS FLASH UPDATE UTILITY

4.1.1 Overview

The printer server software upgrade can be performed through the DOS Flash Update Utility. Anyone doing this must have a good understanding of DOS commands and needs to be familiar with the Network Interface Card documentation.

If more than one printer server requires upgrading, a DOS batch file may be created to prevent re-entering commands for each printer server. See your DOS manual for help with batch files.

4.1.2 Outline of the Procedure

Preparing your Portable PC

1. Install Novell Netware 3.x on your portable PC. This will cause the net.cfg file to be automatically created.
   NOTE: Netware 4.x will not do this.
2. Make a backup copy of the net.cfg file and rename it (e.g., netcfg.bak).
3. Modify the net.cfg file to match the NIC installed in your portable PC, as explained in sections 4.2 and 4.3.
   NOTE: The net.cfg files modified for this process cannot be used for logging on to a Netware server. They are only good for connecting to an SP3.
4. Install the Flash Update Utility as explained in section 4.4.
5. Copy the latest SP3 software (system/PostScript) version to the c:\download directory.

Using the Update Utility

There are two ways to do this.

- At the customer's site
- At the service center

⚠ CAUTION

Do not perform this operation using a PC belonging to the user, and do not connect your PC to the user's network. Otherwise, you may cause problems with the user's network configuration.

- Upgrade at the Customer's Site -

1. Connect your portable PC directly to the SP3's NIC using an Ethernet Cross-type Twisted Pair Cable. Do not hook up your portable to the user's network (see the above Caution).
2. Run the Flash Update Utility (see section 4.6). This copies the new software from your portable to the SP3.

- Upgrade at the Service Center -

1. If you set up a network at your service center, you can bring the user's SP3 NIC and install it in the SP3 on your network.
2. Connect your portable PC to the network (a normal network cable can be used; there is no need to use a cross-cable).

   NOTE: The PC you use to run the Flash Update Utility must be on the same physical wire as the printer server. No bridges or routers are allowed between the PC running the Flash Update Utility and the printer server.
3. Run the Flash Update Utility (see section 4.6). This copies the new software from your portable to the SP3.

4.2 MODIFYING NET.CFG

The net.cfg file must be modified before the Flash Update Utility can function. This utility only works under DOS; do not use Windows 3.1/95.

⚠ **CAUTION**
Make a backup copy of the NET.CFG file before proceeding.

4.3 SAMPLE NET.CFG

4.3.1 Overview

Typical NET.CFG files are presented on the following pages. Your NET.CFG file will be somewhat different, but Emulex (the NIC manufacturer) recommends following one of the samples whenever possible. Required entries are in italic type.

The NET.CFG file requires certain entries to support the MOP Protocol. They are presented below.

1. During initialization, the Flash Update Utility (the protocol stack) checks the NET.CFG file for its main section header.
2. A main section heading for the MOP protocol is labeled "PROTOCOL" and must be on the left margin of the display screen.
3. The "PROTOCOL" entry is followed by the name of the protocol stack MOP.
4. The Flash Update Utility will search for a "BIND" configuration entry.
5. Under the main section heading for the Link Driver, the ETHERNET_II Frame type must be enabled. This is done with the entry "FRAME ETHERNET_II".
6. Under the Main Section Heading for the Link Driver, the following must appear:
   Protocol ID and frame type for the MOP (Dump/Load) Protocol
   Protocol ID for the MOPRC (Remote Console) Protocol
7. The protocol identification and frame types for the MOP are:
   MOP, Dump/Load, Ethernet Standard frame type II
   MOPRC, Remote Console, Ethernet Standard frame type I

4.3.2 SMC EtherCard Elite16C Ultra Ethernet Card

LINK SUPPORT

BUFFERS 6 1600

LINK DRIVER smc8000

FRAME ETHERNET_II MSB

FRAME ETHERNET_802.3 MSB

PROTOCOL IPX 0 ETHERNET_802.3 (binds IPX to frame)

PROTOCOL MOP 6001 ETHERNET_II

PROTOCOL MOPRC 6002 ETHERNET_II

PROTOCOL MOP

BIND #1

Netware DOS Requester

:

:

these dots represent entries unique to your site)

:

:

4.3.3 2. 3Com 3C503 Etherlink II TCP Ethernet Card

LINK SUPPORT

BUFFERS 6 1600

LINK DRIVER 3C503

PORT 300

mem d800

INT 5

; CONNECTOR DIX

; the odipkt driver talks ethernet_ii

FRAME ETHERNET_II MSB

; the ipxodi driver needs 802.3

FRAME ETHERNET_802.3 MSB

Service Tables

```
   PROTOCOL IPX 0 ETHERNET_802.3   (binds IPX to frame)
   PROTOCOL MOP 6001 ETHERNET_II
   PROTOCOL MOPRC 6002 ETHERNET_II
PROTOCOL MOP
   BIND #1
Netware DOS Requester
                    :
                    :
(these dots represent entries unique to your site)
                    :
                    :
```

4.3.4 3. 3Com 3C509B-COMBO Ethernet Card

```
;This section is for configuration of linkwatch manageable end nodes.
;
Protocol DME
   BIND #1
; replace with your specific information for LinkWatch.
   USER_NAME "Your Name"
   NODE_NAME "Your Node Name"
   NODE_LOCATION "Your Node Location"
; set password according to your network administrator's instructions.
; NODE_PASSWORD "ABCDEFGH"
   PHONE_NUMBER "Your Phone Number"
   NOTES "Miscellaneous text"
   NOTES "and more text"
LINK DRIVER 3C5X9
; PORT 300
   FRAME ETHERNET_II
```

```
    FRAME ETHERNET_802.3
    ; FRAME ETHERNET_802.2 MSB
    ; FRAME ETHERNET_SNAP
    PROTOCOL IPX 0 ETHERNET_802.3
    PROTOCOL MOP 6001 ETHERNET_II
    PROTOCOL MOPRC 6002 ETHERNET_II
;
; =======
; port [index] STARTING_PORT COUNT
; This setting is only required when there is two
; adapters in the workstation.
;
; All adapter specific parameters are read from the adapter.
;
; mem [index] MEMORY_WINDOW (Optional)
; If parameter not present in protocol.ini, driver auto selects a
; a free 4K memory window. Released after initialization of card.
; If specified, forces driver to use this address to map card's
; CIS memory during driver initialization. Window is released
; after driver finishes initializing card or fails to find card.
;   Use 0xC000 - 0xEF00 in steps of 0x100
;
; NOTE: frame ethernet_802.3
; *****This is a version 4.X DOS ODI driver. The default
; frame type is 802.2, but you may be using 802.3.
;
; =======
PROTOCOL MOP
```

BIND #1

Netware DOS Requester

:
:

4.3.5 Novell NE2000PLUS-3 Ethernet Card

LINK SUPPORT

BUFFERS 6 1600

link driver ne2000

Int 5

Port 300

FRAME ETHERNET_II

Frame Ethernet_802.2

PROTOCOL IPX e0 ETHERNET_802.2 (binds IPX to frame)

PROTOCOL MOP 6001 ETHERNET_II

PROTOCOL MOPRC 6002 ETHERNET_II

PROTOCOL MOP

BIND #1

Netware DOS Requester

:
:

4.3.6 Intel Express Ethernet Card

```
LINK SUPPORT
    BUFFERS 6 1600
LINK DRIVER EXP16ODI
    PORT 300
    mem d800
    INT 5
; the odipkt driver talks ethernet_ii
    FRAME ETHERNET_II MSB
; the ipxodi driver needs 802.3
    FRAME ETHERNET_802.3 MSB
    PROTOCOL IPX 0 ETHERNET_802.3   (binds IPX to frame)
    PROTOCOL MOP 6001 ETHERNET_II
    PROTOCOL MOPRC 6002 ETHERNET_II
PROTOCOL MOP
    BIND #1
Netware DOS Requester
                :
                :
```

4.4 INSTALLING THE FLASH UPDATE UTILITY

1. Create a subdirectory:
   C:\md download
   This command creates a subdirectory called "download".

2. Insert the floppy disk
   Drive "A" is assumed; if a different drive is used, type the appropriate letter in the next step.

3. Copy the files to the designated drive by entering:
   Copy A:\utils\fwudate *.* C:\download

4. Enter:
   C:\cd download
   C:\download> install
   This installs the Flash Update Utility.

4.5 BEFORE RUNNING THE FLASH UPDATE UTILITY

Read the following section before executing the Flash Update Utility. Choose between defaults, paths, and changes.

4.5.1 AVAILABLE SWITCHES

/b Boot Target Server and exit program, no load

/c Remote Console Connection to target server
Type CTRL-D to exit RCF

/d Change path from default directory for load file

/o Output execution information to the specified log file

/f Netload Target Server and update Flash with load file

/h Display this Help Screen

/l Netload Target Server

/n Name of file to be loaded without the extension

/pl Printer Server Login Password, default = "access"

/pm Maintenance Password (RCF Connection), defaults to disabled.

/pp Printer Server Privilege Password, default = "system"

4.5.2 SWITCH SUMMARY

Switches may be entered in any order. Parameters associated with a switch must follow the switch characters with no intervening spaces. Selections from the table in the preceding paragraph are described in detail below.

b

This switch causes the target printer server to be booted. No change occurs in the printer server settings and the printer server's Flash memory is not updated by the Flash Update Utility. This is a reboot only.

Switch format: /b

c

This switch causes a Remote Console Facility (RCF) connection to be made with the target printer server. After the connection is made, the "#" prompt is displayed. Enter the printer server remote login password (default is access). If the maintenance password has been changed in the printer server, an error will result unless the maintenance password switch (/pm) is also entered on the command line.

Switch format: /c

d

The default path for the load file is "c:\download". If the load file is in another directory, this switch permits a change of path.

Switch format: /d***path***

path Enter the new path for the load file if it has been changed from the default.

o

This switch causes a log file to be kept during execution. If the specified file does not exist, one is created and the execution information is written to it. If the file exists, the information is appended to the file. This allows the log to grow with multiple executions, such as from a batch file.

Switch format: /o***[path]filenam.ext***

path The path to the location of the log file.

filenam.ext Log file name.

f

This switch causes the printer server to perform a DECNet load and Flash update. The printer server is defined for a DECNet load. If the load filename switch is also entered on the command line, the file name for a DECNet load is defined. The printer server is rebooted so the DECNet load will take place. Upon completion of the load, the Flash Update Utility exits to DOS. The printer server will perform a Flash update at the completion of the load independent of the Flash Update Utility.

Switch format: /f

h

This switch causes the help screen to be displayed.

Switch format: /h

l

This switch causes the printer server to perform a DECNet load. The server is rebooted and upon completion of the load the Flash Update Utility exits to DOS.

Switch format: /l

n

This switch is used to enter a load file name different from the default NIC name. The file name is limited to 8 characters without an extension, which is assumed to be ".sys".

Switch format: /n***file_name***

pl

The default printer server remote login password is "access". If the default password is still in use, the switch is not needed. If the login password has been changed, this switch must be used with the /l or /f switches to allow the utility to login to the server.

Switch format: /pl***password***

pm

The maintenance password is disabled by default. If the maintenance password has been changed, the switch must be used when the /l, /f, or /c switches are entered. The maintenance password consists of 1 to 16 hexadecimal characters.

Switch format: /pm***password***

pp

The default privilege password is "system". If this password has been changed, this switch must be entered when the /l or /f switches are used.

Switch format: /pp***password***

4.6 RUNNING THE DOS FLASH UPDATE UTILITY

4.6.1 COMMAND SYNTAX

To run the Flash Update Utility, type the following:

c:\download> flashup mac_add[/switch]

mac_add Enter the Ethernet or MAC address.

switch Switches may be combined if the correct syntax is applied.

4.6.2 SAMPLE SWITCH APPLICATIONS

In each of these sample applications, the flashup command causes the printer server to perform a netload, and the MAC address remains the same: 00-00-c9-03-80-a5.

1. Enter
   C:\download> flashup 00-00-c9-03-80-a5 /f /nCPF518NB

   f This switch causes the printer server to perform a DECNet load and flash update.

   n This switch is used to enter a load file name different from the default NIC name (in this case, the filename is CPF518NB).
   The file name is limited to 8 characters without an extension, which is assumed to be ".sys".

   NOTE: The spaces after the MAC address and after /f are necessary.
2. Press Enter
3. Wait until the DOS prompt is displayed.
4. Wait for 3 more minutes.

⚠ CAUTION

Do not turn off the machine soon after data transfer from the PC wait about 3 minutes after data transfer completed (after returning to the DOS prompt) to allow complete software replacement inside of the NIC memory area.

5. Reboot the NIC (either switch the machine off/on, or use the Network Printer manager).

SECTION 5

REPLACEMENT AND ADJUSTMENT

1. CONTROLLER BOARD COVER REMOVAL

⚠ CAUTION

Unplug the copier power cord before starting the following procedure.

NOTE: This procedure assumes that all optional boards are installed (including scanner board and NIC).

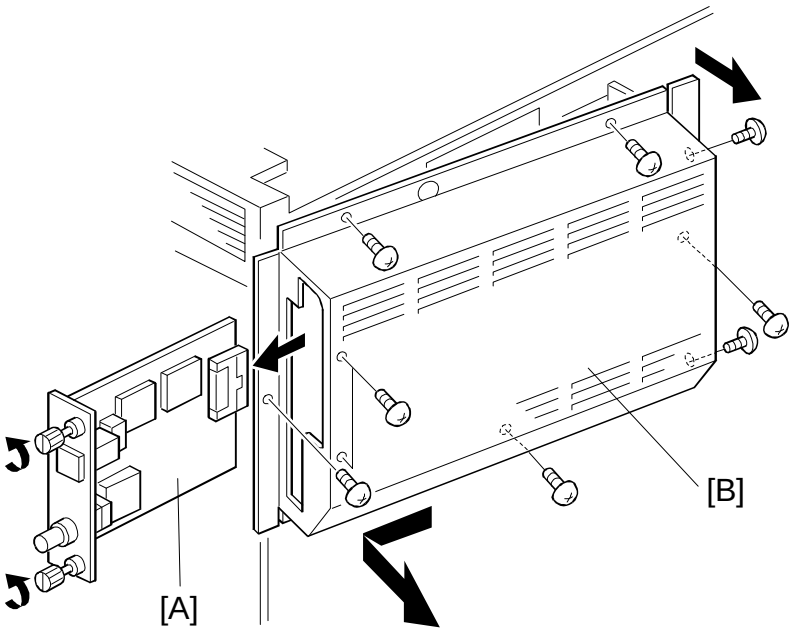

A649R500.wmf

1. Unplug all cables (Parallel, Serial, SCSI) and the SCSI terminator.
2. Remove the NIC [A] (2 screws).
3. Remove the controller cover [B] (9 screws).

2. SCANNER BOARD REMOVAL

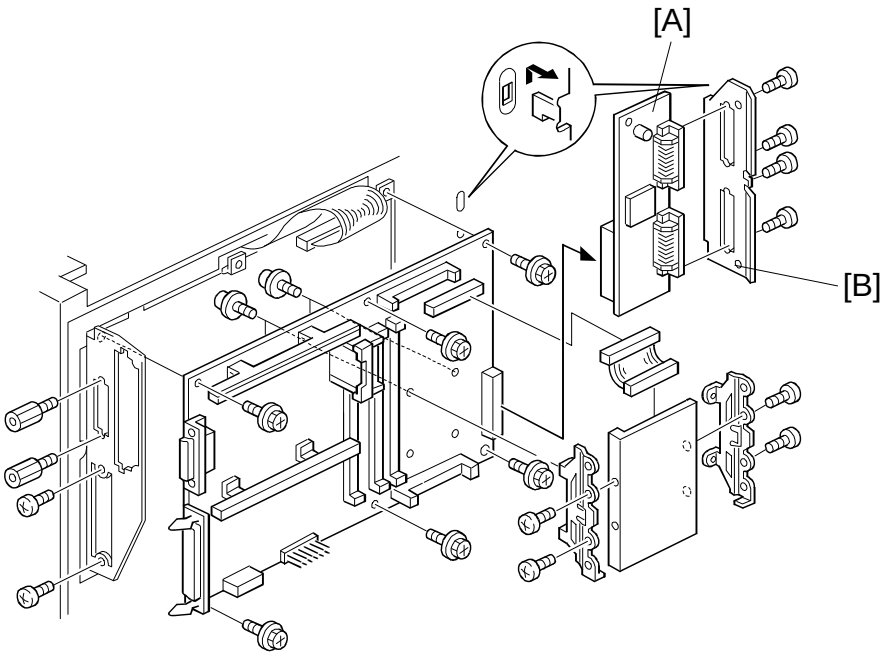

A649R501.wmf

1. Remove the controller board cover (see Controller Board Cover Removal).
2. Dismount the scanner board from the main controller board [A] (1 connector).
3. Remove the SCSI connector bracket [B] (4 screws).

3. HDD REMOVAL

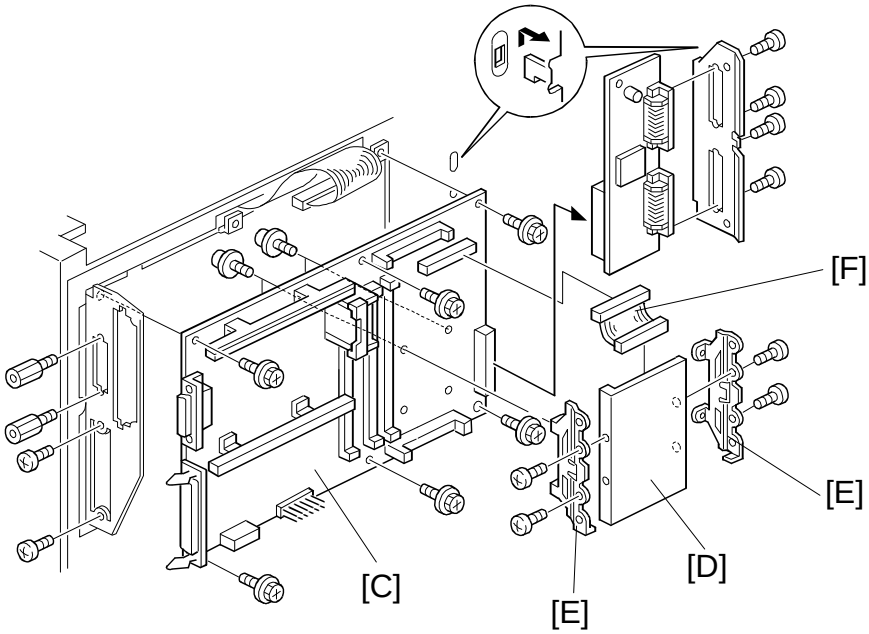

A649R501-2.wmf

1. Remove the controller board cover (see Controller Board Cover Removal).
2. Dismount the scanner board from the main controller board (see Scanner Board Removal).
3. Remove the main controller board [C] with HDD (3 connectors, 10 screws).
4. Dismount the HDD [D] with bracket from the main controller board (4 screws).
5. Remove the bracket [E] (4 screws).
6. Remove the IDE cable [F].

4. MAIN CONTROLLER BOARD REMOVAL

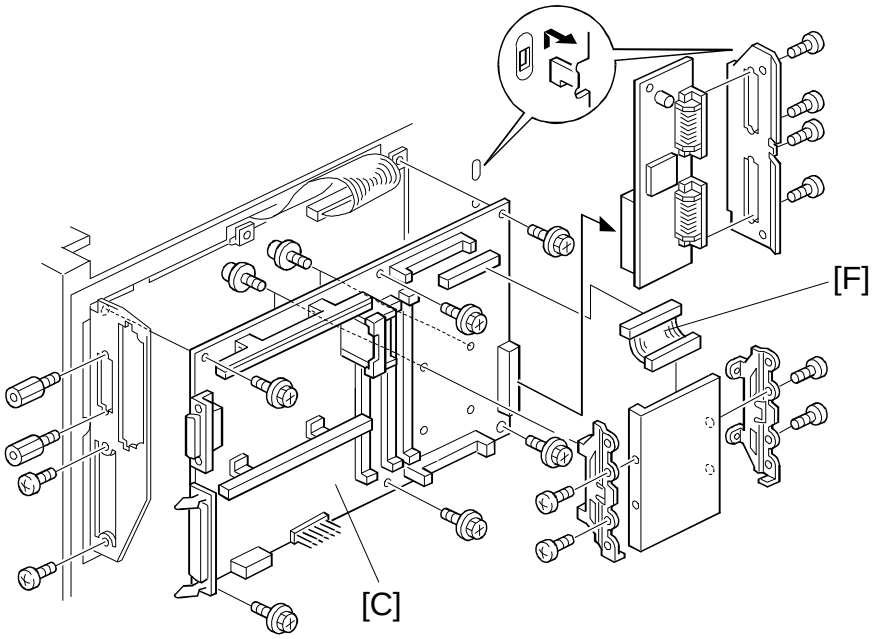

A649R501-3

1. Remove the controller board cover (see Controller Board Cover Removal).
2. Dismount the scanner board from the main controller board (see Scanner Board Removal).
3. Remove the main controller board [C] with HDD (3 connectors, 10 screws).
4. Remove the HDD (see HDD Removal).
6. Remove the IDE cable [F].

5. POSTSCRIPT ROM BOARD REMOVAL

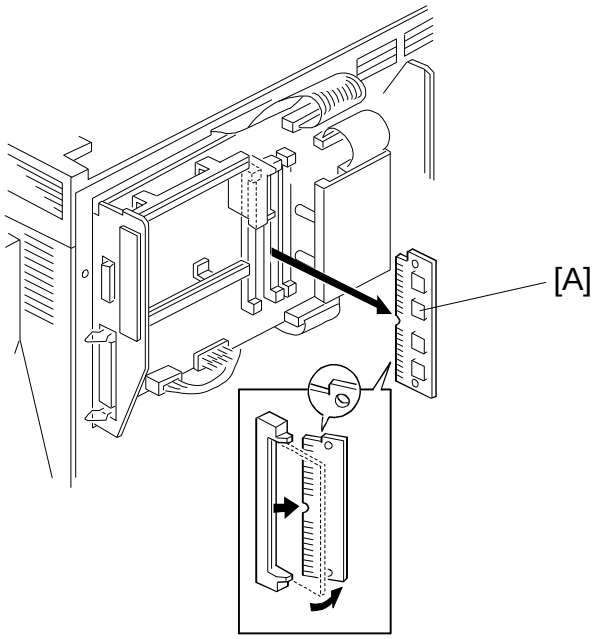

A649R502.wmf

1. Remove the controller board cover (see Controller Board Cover Removal).
2. Hold the SIMM stopper on both sides and release the PostScript ROM.
3. Remove the PostScript ROM [A]

6. RAM SIMM BOARD REMOVAL

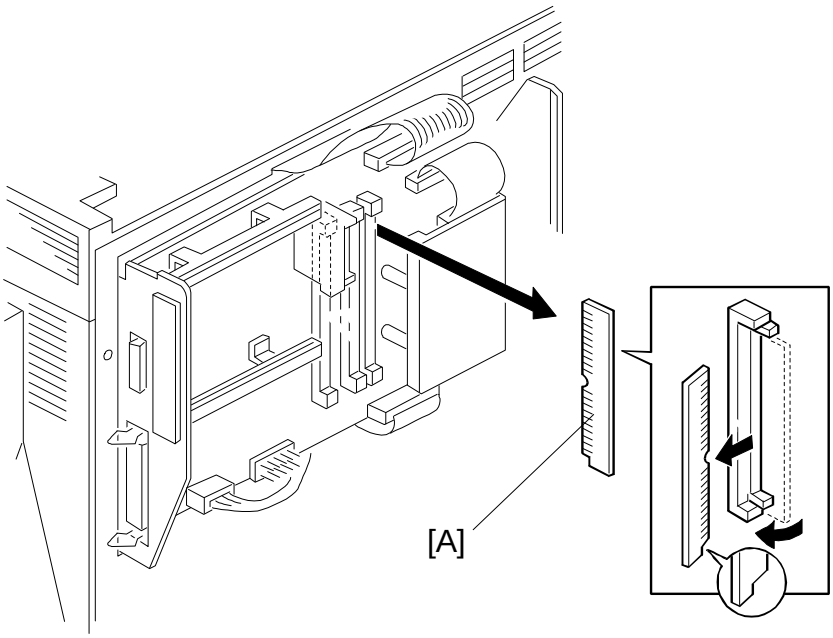

A649R503.wmf

1. Remove the controller board cover (see Controller Board Cover Removal).
2. Hold the SIMM stopper on both sides and release the RAM SIMM.
3. Remove the RAM SIMM Board [A]

SECTION 6

TROUBLESHOOTING

1. TROUBLESHOOTING

1.1 GENERAL

To solve a problem, you need to classify the cause of the problem into one of the following groups.

1. Machine Operation
   1) Setup Menu Setting Error
   2) Paper Handling Error (Paper Size, Paper Tray Selection, others)
   3) Operation Error related to Connecting Cables/Terminator

2. PC Operation
   1) Application Setting Error
   2) Driver Setting Error
   3) Network Setting Error at the PC side

3. Network Operation
   1) SP3 NIC Setting Error
   2) Network Configuration Setting Error (File Server, Print Server, others)

4. Hardware
   1) Hardware Error in the SP3 engine
   2) Hardware Error in the controller (or the related options)
   3) Hardware Error in the Connection Environment (Cables, Hub, Terminator, PC, others)

5. Software
   1) Controller, PostScript, NIC Software Bug
   2) Driver Software Bug
   3) Application Software Bug

You need to provide the following information before troubleshooting each case.

1. Self Test Page and print sample
2. Application Configuration and Print Sample/Scanned Sample File (Including Software versions)
3. Error Code/Error Message/Error Status
4. Print Sample and Occurrence Conditions
5. Operating Conditions and Environment

1.2 MESSAGES/STATUS INDICATION

The SP3 controller has two methods of indicating the status information.

1. In the printer/scanner mode, the SP3 controller provides an operation panel message. These are listed in the "Error Messages" section.
2. After initialization of the controller, the SP3 controller indicates the status using the LEDs on the main controller board.

1.3 ERROR MESSAGES

The SP3 message list includes call service errors.

The following error messages might need assistance from service.

1.3.1 Controller Error

Possible Cause

- The main controller board is defective.
- The HDD is defective.

Action:

1. Check the connection between the HDD and the main controller board.
2. Check the connection the cables between the SP3 engine and main controller board.
3. Check the LEDs on the main controller board.
   If it is a disk test error, do the following.
   - If it is another fatal error code of a main controller board component, go to step 5.
   - (Boot ROM, Onboard RAM, Shared Memory, FCI Chip, Compression Chip, Font ROM)
4. Replace the HDD.
5. Replace the main controller board.

1.3.2 Controller Disk Error

Possible Cause

- The main controller board is defective.
- The HDD has a bad area.
- The HDD is defective.

Action:

1. Check the connection between the HDD and the main controller board.
2. Check the connection the cables between the SP3 engine and main controller board.
3. Try to duplicate the same error after turning off.
   If this error message disappear, check the Printer Controller Disk Error Log using the system parameter report (SP5990).
4. Replace the HDD.
5. If the problem still remains, replace the main controller board.

1.3.3 Print Overrun Error

Possible Cause

- A complex page is printed.
- The RAM SIMM board is defective.
- The controller board is defective.

Action:

1. Check the memory capacity.
   - If the RAM size does not match the installed RAM SIMM board size, go to step 4.
2. Try to print out with the printer only mode using the same file.
   - If the print out is successful, add a RAM SIMM board depending on the users configuration.
3. Try to print out with the added RAM.
4. Check the LEDs on the main controller board.
   - If it is a DRAM SIMM test error, do the following.
5. Replace the RAM SIMM board.
6. If the DRAM SIMM test error still remains, replace the main controller board.

1.3.4 Memory Overflow

Possible Cause

- A complex page is printed.
- The RAM SIMM board is defective.
- The controller board is defective.

Action:

1. Check the memory capacity.
   - If the RAM size does not match the installed RAM SIMM board size, go to step 4.

2. Try to print out with the printer only mode using the same file.
   - If the print out is successful, add a RAM SIMM board depending on the users configuration.

3. Try to print out with the added RAM.

4. Check the LEDs on the main controller board.
   - If it is a DRAM SIMM test error, do the following.

5. Replace the RAM SIMM board.

6. If the DRAM SIMM test error still remains, replace the main controller board.

1.3.5 <Tray> failure has occurred

Definition:

The paper tray which was feeding paper broke.
If the main controller receives any paper tray error from the SP3 engine during paper feeding, this message will be displayed.

Actions:

1. Shift the mode to the copier menu.

2. Check the condition of the copier trays.

1.3.6 No Exit from Initializing the controller

Definition:

The On-Line LED is blinking, and/or "Initializing the controller. Please wait." is displayed all the time.

The SP3 controller cannot be shifted On-Line, as the SP3 controller cannot complete the initialization.

Possible Cause:

- The SCSI I/F is not terminated correctly.
- The HDD is defective.
- The scanner board defective
- The main controller board is defective.

Action:

1. Check the terminator of the SCSI I/F, if the scanner board is installed.
   - If the SCSI I/F is not terminated, plug in the SCSI terminator.
   - If the SCSI Device at end of the SCSI bus is not turned on, turn it on to supply the termination electrical power.
2. Check the connection between the HDD and the main controller board.
3. Check the connection of the cables between the SP3 engine and main controller board.
4. Check the connection between the scanner board and the main controller board.
5. Check the LEDs on the main controller board.
   - If it is a disk test error, do the following (from step 6).
   - If it is another fatal error code of a main controller board component, go to step 8.
     (Boot ROM, Onboard RAM, Shared Memory, FCI Chip, Compression Chip, Font ROM)
6. Replace the HDD.
7. Replace the scanner board.
8. Replace the main controller board.

1.4 DIAGNOSTIC LEDS

1.4.1 Self Diagnostics

When the SP3 controller board powers on, it performs a self diagnostic sequence of tests.

Test Items :

- Boot ROM Checksum
- On Board RAM Area Test
- DRAM SIMM Test
- On-Board Shared Memory Test
- FCI Chip Register Test
- Compression Chip Test
- Font ROM Checksum
- Disk Test
- Network Port Test
- SCSI Port Test
- PostScript ROM Checksum

Four LEDs located on the main controller board are used to display the progress of the self test and to display any errors that have occurred.

1.4.2 Diagnostic LEDs Codes

Several type of code is available to light LEDs on the controller board.

Fatal Error Codes
Initial Image Loading
Non-Fatal Errors
Other Codes

NOTE:
1) When multiple failures exist (for example no NIC or scanner card) only the highest priority (lowest number) code is displayed.
2) The DRAM SIMM error will only be displayed when a SIMM is detected and the memory test fails. An empty DRAM SIMM socket is not an error. If the DRAM SIMM test fails, the memory is disabled and operation continues using only the onboard DRAM.
3) The Flash SIMM error will only be displayed when a SIMM is detected, and the checksum test fails. A programmed SIMM in the socket is not an error.
4) If the onboard flash ROM contents are invalid, the flash download routine is started automatically to allow the initial image to be loaded without the use of a monitor board.
5) The LED test code (all LEDS on) is displayed for a brief period following power-up.

1.4.3 LED Code Table

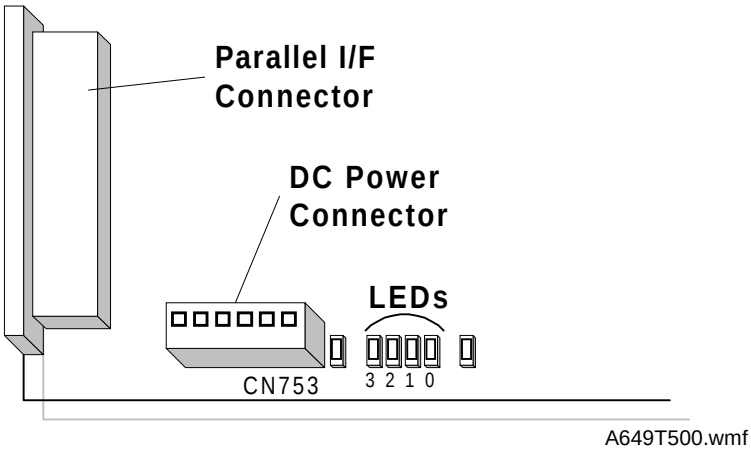

The LEDs are located near DC Power Connector (CN753) on the main controller board. The middle four LEDs (0 to 3) are used for the diagnostic status indication.

LEDs				Hex.	Description
#3	#2	#1	#0		
OFF	OFF	OFF	OFF	0x0	All tests passed
OFF	OFF	OFF	ON	0x1	BootROM checksum error
OFF	OFF	ON	OFF	0x2	On-board RAM test failed
OFF	OFF	ON	ON	0x3	Shared memory test failed
OFF	ON	OFF	OFF	0x4	FCI chip register test failed
OFF	ON	OFF	ON	0x5	Compression chip test failed
OFF	ON	ON	OFF	0x6	Font ROM checksum error
OFF	ON	ON	ON	0x7	Onboard flash ckecksum error (O/S), download waiting
ON	OFF	OFF	OFF	0x8	Flash download started
ON	OFF	OFF	ON	0x9	Flash download complete, programming flash
ON	OFF	ON	OFF	0xa	DRAM SIMM test failed
ON	OFF	ON	ON	0xb	Disk test failed
ON	ON	OFF	OFF	0xc	Network Port Test Failed
ON	ON	OFF	ON	0xd	SCSI test failed
ON	ON	ON	OFF	0xe	FLASH SIMM (Postscript) checksum error
ON	ON	ON	ON	0xf	LED test

2. ERROR HANDLING AND MANUAL TRAY OPERATION

2.1 ERROR SUSPENSION SCREEN

If an error has occurred in the SP3 and operator intervention is required, the error suspension screen is displayed on the control panel, and the machine enters offline mode.

This screen has two buttons, Reset and Continue.

2.2 AUTO-CONTINUE

The configuration menu has an item called AUTO-CONTINUE.

If an error has occurred in the SP3 and operator intervention is required at the printer side, then the error suspension screen is displayed on the control panel, and the machine enters offline mode.

Then, if AUTO-CONTINUE is ON, and there is no operator response within the auto-continue time-out period (30 seconds), the SP3 will go back online (just like when the Continue button is pressed), and the job will be resumed automatically.

This function is very important in a multi-function network printer like the SP3.

2.3 BYPASS TRAY TIME-OUT

When a print job selects the manual tray, the SP3 displays "Please open the Bypass Tray" on the control panel.

If the bypass tray is not opened within the specified time-out period, the print job will be canceled.

The default is 300 seconds (5 minutes). The possible range is from 5 seconds to 300 seconds.

3. ERROR MESSAGES

The message strings used by the copier application are not included in the following tables.

3.1 PRINTER ERRORS

Error Message	Type	Description	Action	Auto-Continue
Controller error(01). Please call for service. Tel:######## Press [Copy] key to leave this mode.	Alert window	A diagnostic error occurred at power-on.	The controller has a hardware problem . The user has to call a technician. If the user presses the **[COPY]** key, then the copier application can be used.	No
Controller error(02). Please call for service. Tel: ######## Press [Copy] key to leave this mode.	Alert window	Anexception error has occurred in the controller.	The controller has a software or hardware problem. If this error has occurred many times, the user has to call service. If the user presses the **[COPY]** key, then the copier application is available.	
Controller disk error. Please call for service. Tel: ########	Error suspension	A disk error occurred during printing.	If the machine is powered off then powered back on, the printer will attempt to use the disk as usual. If this error occurs again, this error suspension screen will be displayed again. If this error has occurred many times, the user has to call a technician to repair the disk. At the time, the printer is still off-line. However, the user can use the copier application by pressing the COPY key.	No

Trouble-shooting

Error Message	Type	Description	Action	Auto-Continue
Serial communi-cation error. Please set up communi-cation parameters again.	Error suspension	A serial communication error occurred during printing.	The user has to check the serial communication settings. The user needs to press the RESET button to cancel the print job. **[Reset]** The print job is canceled. If some paper is remaining in the machine, the paper is discharged automatically.	No
Ethernet failure. Network communi-cation is not available.	Error suspension	This error occurs only at power-up time when an installed network card fails to correctly establish communication with the network. **Note** If a network card is installed but not plugged into a network connection, no error will occur. When the network card fails to initialize, the printer will go on line and operate normally. Note that this can take several minutes.	The user has to check the network settings. **[Continue]** If the user presses the CONTINUE button, the printer operation will continue without network capability.	No
Token Ring failure. Network communi-cation is not available.	Error suspension	This error occurs only at power-up time when an installed network card fails to correctly establish communication with the network. **Note** If a network card is installed but not plugged into a network connection, no error will occur. When the network card fails to initialize, the printer will go on line and operate normally. Note that this can take several minutes.	The user has to check the network settings. **[Continue]** If the user presses the CONTINUE button, the printer operation will continue without network capability.	No

Error Message	Type	Description	Action	Auto-Continue
Print overrun error	Error suspension	A print overrun has occurred on a file that is being printed in banding mode. When the printer is in banding mode, a complex page may not have enough time to image a band while the engine is printing the previous band.	Only part of the data on the page will print, and the print job is suspended. **[Continue]** If the user presses this button, the print job will resume. To print the image correctly, the user has to add more memory to the machine, or reduce the resolution of the image and resend the job. **[Reset]** The print job is canceled. If some paper is remaining in the machine, the paper is discharged automatically.	Yes
Memory overflow	Error suspension	A memory overflow occurred during printing. The language has sent a file too complex to interpret in the available memory.	**[Continue]** If the user presses this button, the printing will resume. However, only a part of the data on that page will print, and subsequent pages will continue to print. To print the print job correctly, the user has to add more memory to the machine. **[Reset]** The print job is canceled. If some paper is remaining in the machine, the paper is discharged automatically.	Yes

Error Message	Type	Description	Action	Auto-Continue
The spooling area of the disk is full. Press Continue to resume printing. The current print job will be split.	Error suspension	A disk full error has occurred in the spooling area during printing. The spooling area of the disk contains both spooling data and page image data if reverse order and duplex printing are used. Whenever this area becomes more than a certain amount full, spooling is turned off automatically. At this point, the user does not receive any error message. This allows spooling to only take up a certain amount of the area, leaving most of the room available for page image data.	**[Continue]** The current collation is ended, and the pages that are already on the disk are printed, including any multiple copies of these pages. A new collation set is then started with the new input data. So, the print job is not completed in the desired order. **[Reset]** The print job is canceled. If some paper is remaining in the machine, the paper is discharged automatically.	No
The PostScript area of the disk is full	Error suspension	A disk full error has occurred in the PostScript area during printing.	**[RESET]** Once this area is full, there is no reasonable way to continue with the current job. After the user has confirmed this error, the user should select the RESET button. Once the job is RESET, the user should delete data from the area prior to resending the job.	No
The PCL area of the disk is full	Error suspension	A disk full error has occurred in the PCL partition during printing.	**[RESET]** Once this area is full, there is no reasonable way to continue with the current job. After the user has confirmed this error, the user should select the RESET button. Once the job is RESET, the user should delete data from the area prior to resending the job.	No

Error Message	Type	Description	Action	Auto-Continue
Add Staples	Message	The staples have almost run out.	The user has to add staples. This is only a warning message, so the print job will be continued.	No
No paper. Add <size> paper <tray>	Error suspension	There is no specified paper in the specified input tray. **Note** This error does not occur if auto tray change is enabled and there is some paper of the same size and direction in another input tray; printing will continue from that tray.	The user has to put the specified paper in the specified tray. After that, printing will resume automatically. **[Continue]** If the user presses this button without putting any paper in the specified tray and if auto tray change is enabled, paper of an incorrect size will be pulled from another tray, and printing will resume. If auto tray change is not enabled, the error suspension screen is displayed again. If the user puts paper of a different size in the specified tray, the printing will continue this incorrect paper size. **[Reset]** The print job is canceled. If some paper is remaining in the machine, this paper is discharged automatically.	No
Check tray. Set the <Tray> correctly.	Error suspension	The tray which is used by the print job is open.	The user has to close specified tray (this includes the duplex tray). After that, printing will resume automatically.	No

Error Message	Type	Description	Action	Auto-Continue
<Tray> failure has occurred. Please call for service. Tel: ########	Alert window	The tray has broken.	The user has to call a technician. However, if the machine is turned off and on, a print job which does not use the tray can print. Then, the broken tray information will be displayed on the control panel as an icon or error message.	No
The shift tray is full. Remove the copies.	Error suspension	A bin overflow has occurred in the 1-bin finisher.	The user has to remove the paper from the 1-bin finisher, and printing will resume automatically.	No
Printing is interrupted. Press [Continue], or press [Reset] to cancel the current job.	Error suspend	A paper jam has occurred, and after the paper jam bas been removed by the user, this error suspend screen is displayed.	The user can select the following operations after the paper jam. **[RESET]** The print job is canceled. **[CONTINUE]** If jam recovery is off, the rest of the print job will be flushed and the next print job that was not involved in the jam in any way will start to print. If jam recovery is on, then jam recovery will be started.	
Remove the paper in the staple unit.	Alert window	When a paper jam has occurred during printing, if there are the remained papers in staple unit, this alert window is displayed.	The user has to remove the paper in the staple unit.	No
Remove the paper in duplex tray.	Alert window	When a paper jam has occurred during printing, if there are the remained papers in duplex tray, this alert window is displayed.	The user has to remove the paper in the duplex tray.	No

3.2 MANUAL TRAY OPERATION MESSAGES

Error Message	Type	Description	Action	Auto-Continue
Please open the Bypass Tray	Error suspension	When a manual feed job is selected and the manual tray is not opened, this message is displayed on the panel.	This error suspension screen has no buttons. The user has to open the bypass tray on the machine. If the bypass tray is not opened within a time-out period, the manual feed job will be canceled. The time-out is called the Bypass Tray Time-out and is settable at the control panel.	No
No paper. Add <size> paper to Bypass Tray **Note:** <size> includes paper size and orientation.	Error suspension	After a manual tray job is selected and the manual tray is opened, or paper ran out during printing, this message is displayed on the panel.	If the user puts the specified paper in the bypass tray, the machine loads the paper automatically and the job will be resumed. **[Reset]** The print job is canceled. If some paper is remaining in the machine, the paper is discharged automatically.	No
Please close the Bypass Tray	Error suspension	After a manual tray feed job is finished, when **an "LCT** feed page" command is encountered and if the manual tray is opened, this message is displayed on the panel.	The error suspension screen has no buttons. The user has to close the bypass tray. If the bypass tray is NOT closed, the next print job is not printed until closing the bypass tray.	No

3.3 ENGINE WARNING LEVEL ERROR MESSAGES

The following errors are only warnings. Even if one of these errors has occurred, printing and scanning are possible.

Error Message	Type	Description	Action	Level
Toner is almost used up.	Message	Toner has almost run out.	----	Warning
The used toner bottle is nearly full.	Message	The used toner tank is nearly full.	----	Warning
Warming up. Please wait.	Message	The engine is warming up.	The user has to wait until the engine is ready.	Warning
Duplex tray failure has occurred.	Message	The duplex tray has a mechanical problem.	The user has to call service to repair the duplex tray.	Warning

3.4 ENGINE ALERT LEVEL ERROR MESSAGES

Engine alert level error messages are displayed by the system alert window in the same way as for the copier.

These errors include the following.

Toner End
Used Toner Bottle Full
Cover Open (Front door, ADF, Sorter)
Engine Fatal Error (call for service)
Jam (ADF, Engine, Sorter)

3.5 MISCELLANEOUS ERROR MESSAGES

The following errors are indigenous to a multi-function engine.

When the active application is changed from the copier application to the printer application, or the start-up application is the printer/scanner application, on of the following error messages may be displayed on the screen.

If there are copies left in the duplex tray, one of the following alert messages is displayed on the control panel.

Error Message	Type	Description	Action
There are copies left in the duplex tray. Pull out the duplex tray and remove the copies.	Alert Window	There are copies left in the duplex tray at power-on	This alert window is displayed.
There are copies left in the staple unit. Open the duplex tray and remove the copies.	Alert Window	There are copies left in the staple unit at power-on	This alert window is displayed.
Copies left in the duplex tray are exiting.	Alert Window	If there are copies left in the duplex tray and these copies are being discharged by the machine automatically, this alert window is displayed.	----------
There are copies left in the duplex tray. Press OK to exit the copies in the duplex tray.	Alert Window	When the machine shifts to Printer/Scanner mode from copier mode, if there are copies left in the duplex tray, this alert window is displayed.	The user has to press the OK button or remove the copies in the duplex tray.
Original is left on exposure glass.	Alert Window	In scanner mode, if there is paper on the exposure glass and paper is placed in the ADF, this alert window is displayed.	The user has to remove the paper on the exposure glass or the paper in the ADF.