RICOH

Technical Bulletin

Model: V-C2 Color Controller E-8100	Date: 23-May-14	No.: RD450001

Subject: Part Information (BUTTON:UIB:45064547)	Prepared by: Chihiro Shimaji
From: 1st Tech Service Sect., MFP/P Tech Service Dept.	

Classification:			
	☐ Troubleshooting	☒ Part information	☐ Action required
	☐ Mechanical	☐ Electrical	☐ Service manual revision
	☐ Paper path	☐ Transmit/receive	☐ Retrofit information
	☐ Product Safety	☐ Other ( )	☐ Tier 2

Please add the following part to your parts catalog.

Old P/N	New P/N	Description	Q'ty	Int	Page	Index	Note
-	M4361095	BUTTON:UIB:45064547	1	-	3	16	Add
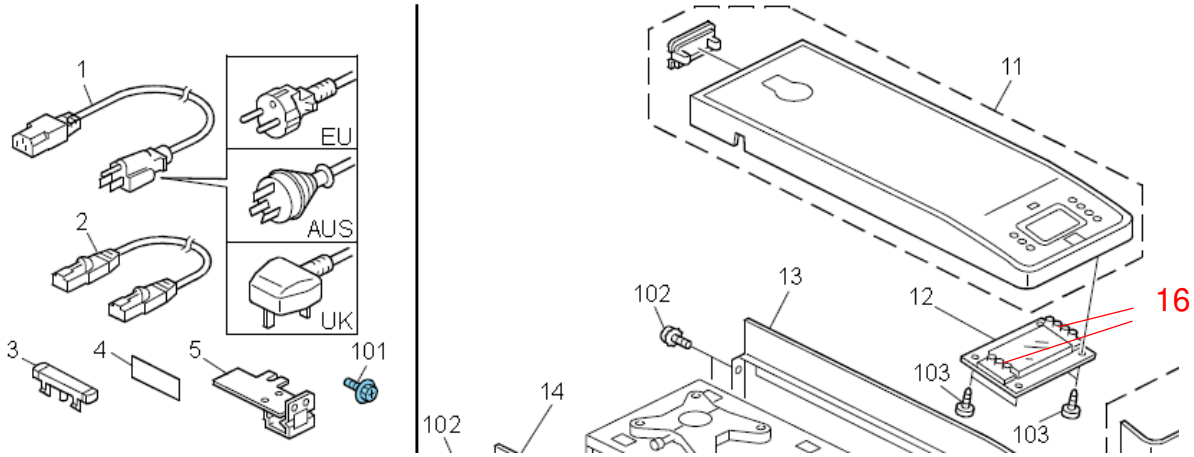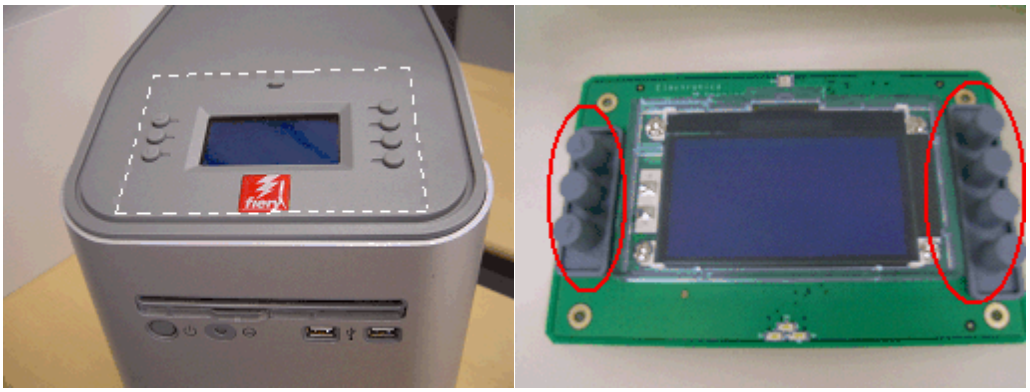
1.Controller Bundled Items and Covers (D450-01/-02)