Buffer Pass Unit (D751)

PARTS CATALOG

This catalog gives the numbers and names of parts on this machine.

1 Exterior 1 (D751) ····· 2P
2 Exterior 2 (D751) ····· 4P
3 Paper Transfer 1 (D751) ····· 6P
4 Paper Transfer 2 (D751) ····· 8P
5 Paper Transfer 3 (D751) ····· 10P
6 Paper Transfer 4 (D751) ····· 12P
7 Paper Transfer 5 (D751) ····· 14P
8 Paper Transfer 6 (D751) ····· 16P
9 Paper Transfer 7 (D751) ····· 18P
10 Electrical Section 1 (D751) ····· 20P
11 Electrical Section 2 (D751) ····· 22P
12 Electrical Section 3 (D751) ····· 24P
13 Electrical Section 4 (D751) ····· 26P
14 Frame Section (D751) ····· 28P
15 Parts Index ····· 30P

May 1, 2013

1.Exterior 1 (D751)

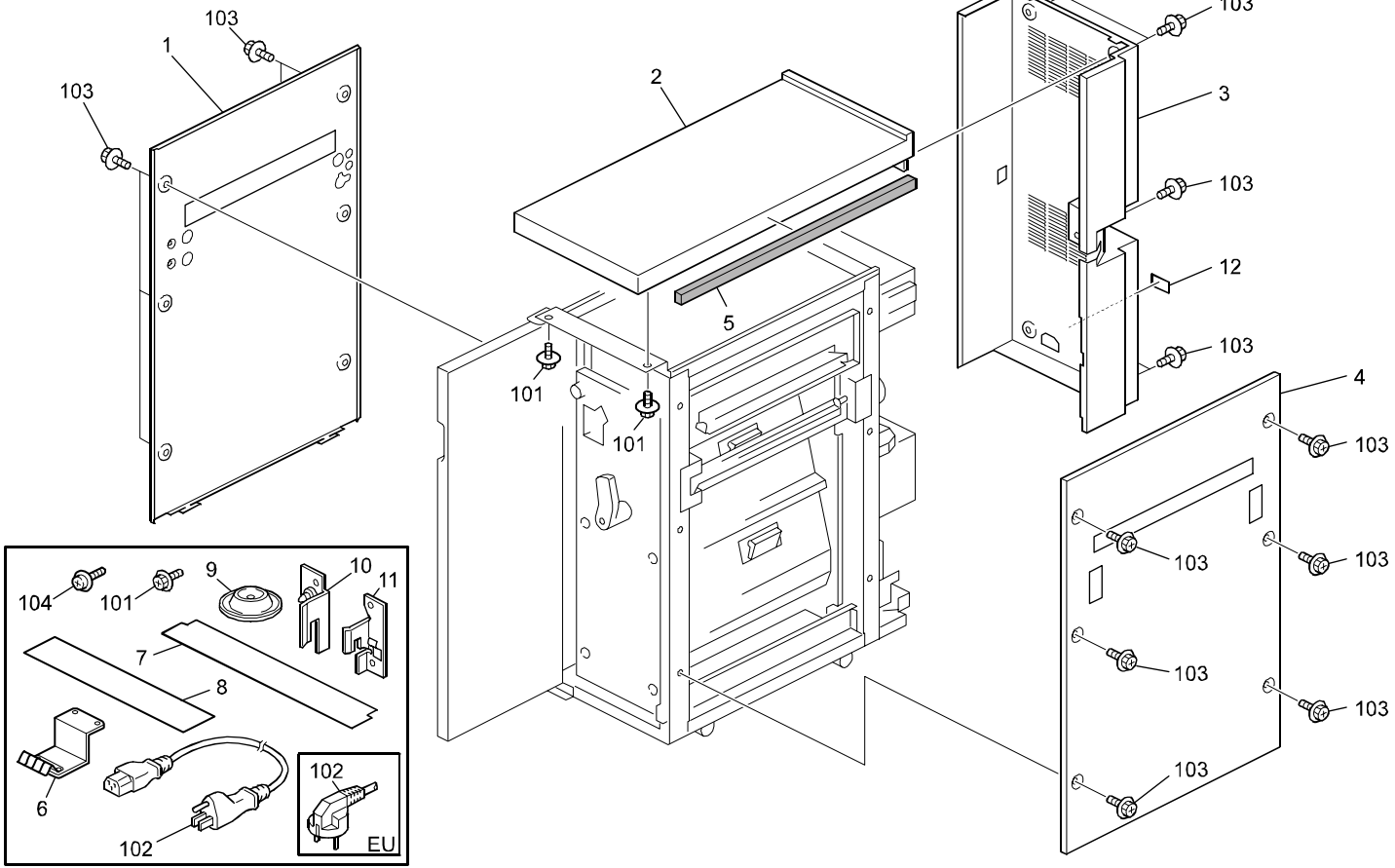

1.Exterior 1 (D751)

Index No.	Part No.	Description	Q'ty Per Assembly
1	D751 1277	Cover:Side:Left	1
2	D751 1259	Cover:Upper:Coat	1
3	D751 1264	Cover:Rear	1
4	M379 1270	Cover:Side:Right	1
5	B302 7531	Cushion -10x15x585	1
6	D548 8002	Bracket:Ground Plate:Ass'y	1
7	M379 1596	Sheet:Guide Plate:Finishing Section	2
8	D751 1677	Sheet:Guide Plate:Enterance	2
9	B132 1226	Holder:Stand	4
10	B835 1191	Coupling Bracket - Rear	1
11	B835 1195	Coupling Bracket - Front	1
12	G166 1391	Decal:Earth:NE	1

Index No.	Part No.	Description	Q'ty Per Assembly
101	0451 4008N	Tapping Screw:4x8	
102	1150 0438	Power Supply Code:125V:15A:NA	
102	1150 0377	Power Supply Code:250V:10A:EU	
103	0454 4008N	Tapping Screw:Round Point:4x8	
104	0951 4020N	Screw:Polished Round:M4x20	

2.Exterior 2 (D751)

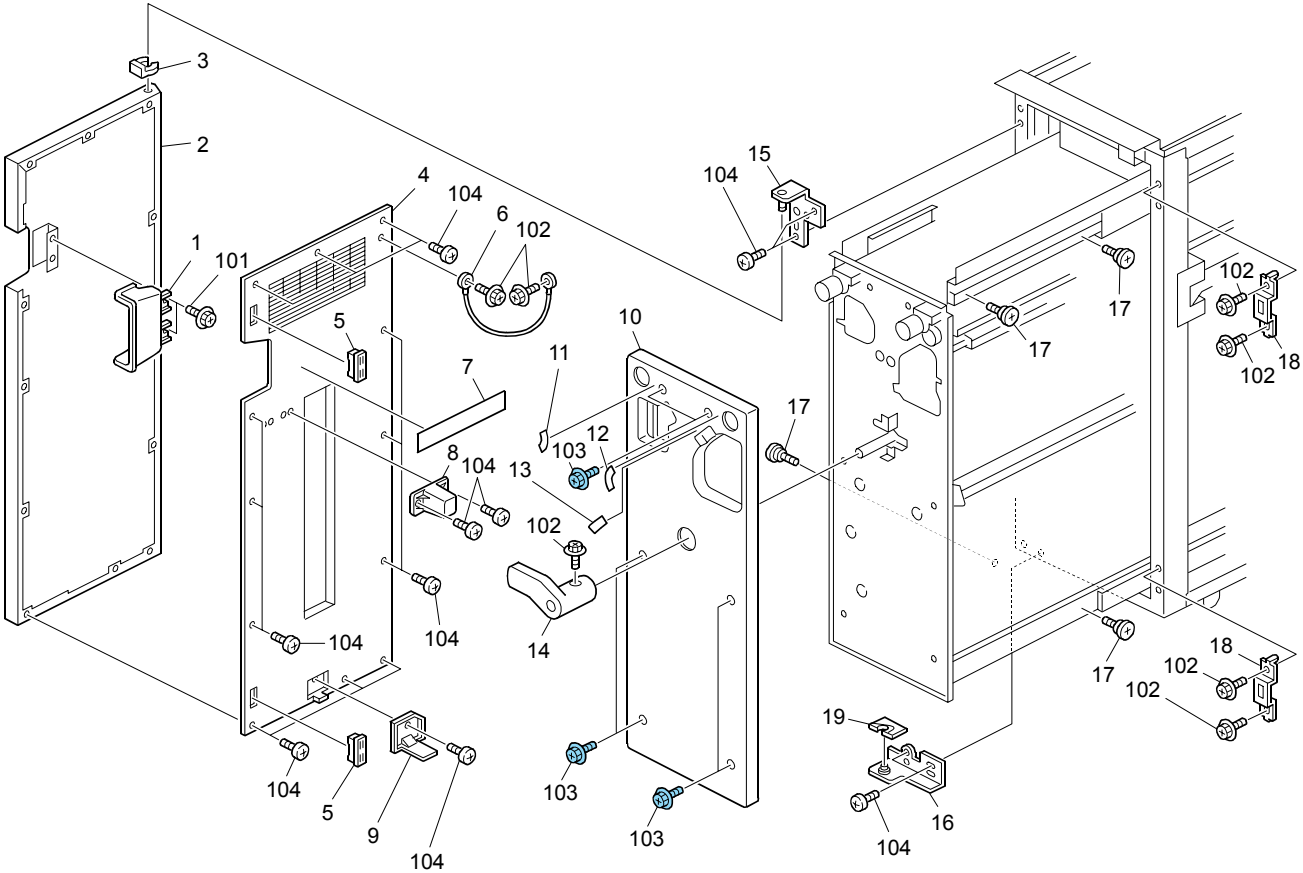

2.Exterior 2 (D751)

Index No.	Part No.	Description	Q'ty Per Assembly
1	D751 1240	Door:Knob	1
2	D751 1250	Cover:Front	1
3	5447 2681	Snap Ring	1
4	D751 1251	Cover:Front:Inner Cover	1
5	AG07 0007	Magnet Catch	2
6	M379 1759	Harness:Earth:Cover	1
7	M379 1655	Decal:Pick-up Paper Jam:Upper	1
8	D751 1239	Stand:Un Lock	1
9	B234 1293	Lever - Safety Switch	1
10	M379 1609	Inner Cover:Transport Unit	1
11	M379 1664	Decal:Knob:KC4	1
12	M379 1661	Decal:Knob:KC1	1
13	M379 1662	Decal:Knob:KC2	1
14	M379 1665	Lever:Pull Out:Transport:KC5	1
15	M379 1220	Hinge:Door:Front	1
16	M379 1223	Hinge:Door:Lower	1
17	G178 4909	Screw:Transport	4
18	M379 1226	Plate:Magnet Catch	2
19	M379 1244	Stopper:Cover:Front	1

Index No.	Part No.	Description	Q'ty Per Assembly
101	0451 3006N	Tapping Screw - 3x6	
102	0451 4008N	Tapping Screw:4x8	
103	0454 4008Q	Tapping Screw - M4x8	
104	0354 0080N	Screw:M4x8	

3.Paper Transfer 1 (D751)

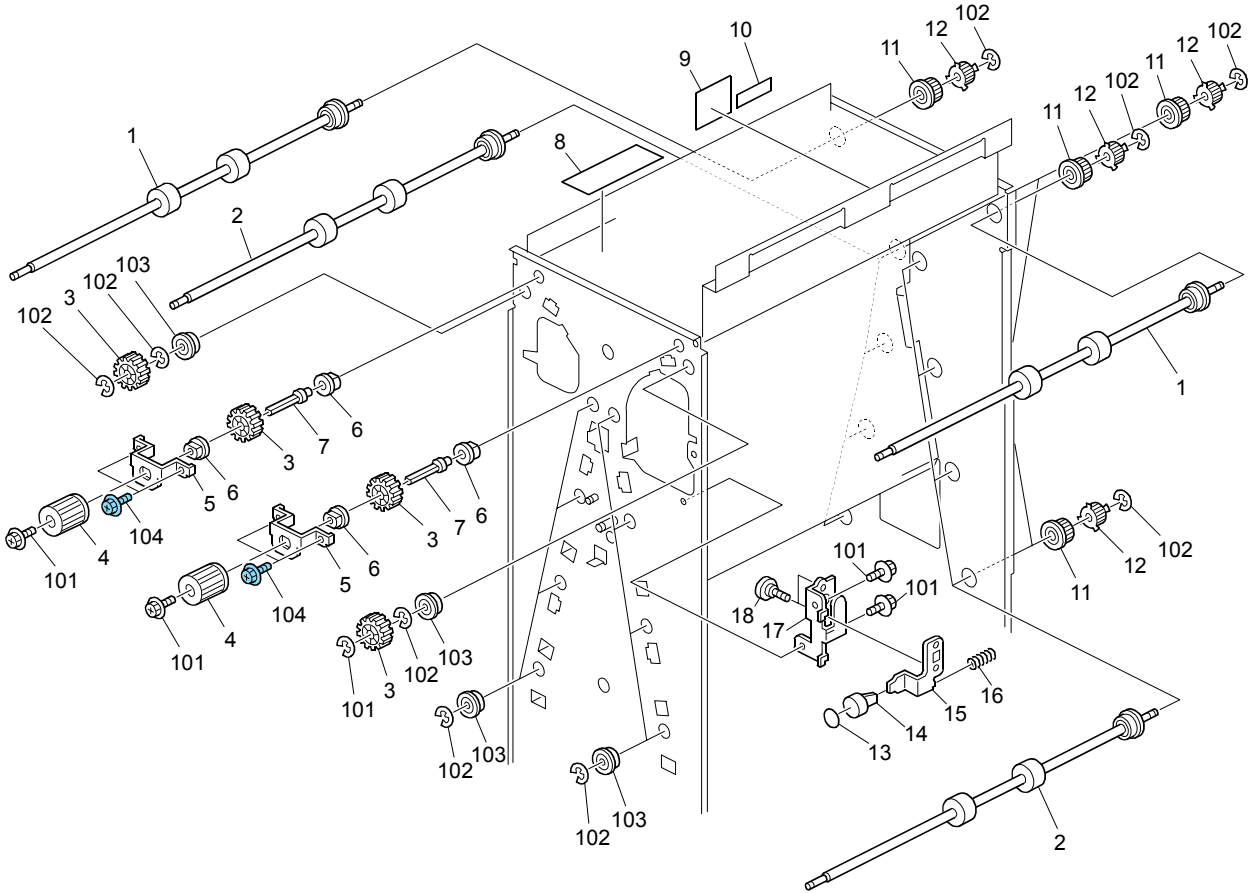

3.Paper Transfer 1 (D751)

Index No.	Part No.	Description	Q'ty Per Assembly
1	M379 1623	Transport Roller:Knob	2
2	G178 4943	Transport Roller:Duplex	8
3	AB01 3751	Gear - 24Z	4
4	AG05 0101	Knob - Misfeed Removal	2
5	M379 1531	Bracket:Knob	2
6	AA08 2104	Bushing - 8x12x7	4
7	M379 1530	Shaft:Knob	1
8	M379 1654	Decal:Pick-up Paper Jam:Lower	1
9	D355 4572	Decal:Paper Tray:Warning	1
10	M379 1657	Decal:Transport Unit:Caution	1
11	AB03 0081	Pulley - 20Z	10
12	AB03 0802	Timing Pulley - 24T	10
13	M379 1663	Decal:Button:KC3	1
14	B234 2793	Button	1
15	M379 1587	Slider:Un Lock	1
16	AA06 3677	Spring	1
17	M379 1585	Bracket:Guide Plate:Positioning	1
18	AA14 3802	Screw:6x1.7	2

Index No.	Part No.	Description	Q'ty Per Assembly
101	0451 4008N	Tapping Screw:4x8	
102	0720 0060E	Retaining Ring - M6	
103	0741 3808	Ball Bearing - 8x16x5mm	
104	0454 4008Q	Tapping Screw - M4x8	

4.Paper Transfer 2 (D751)

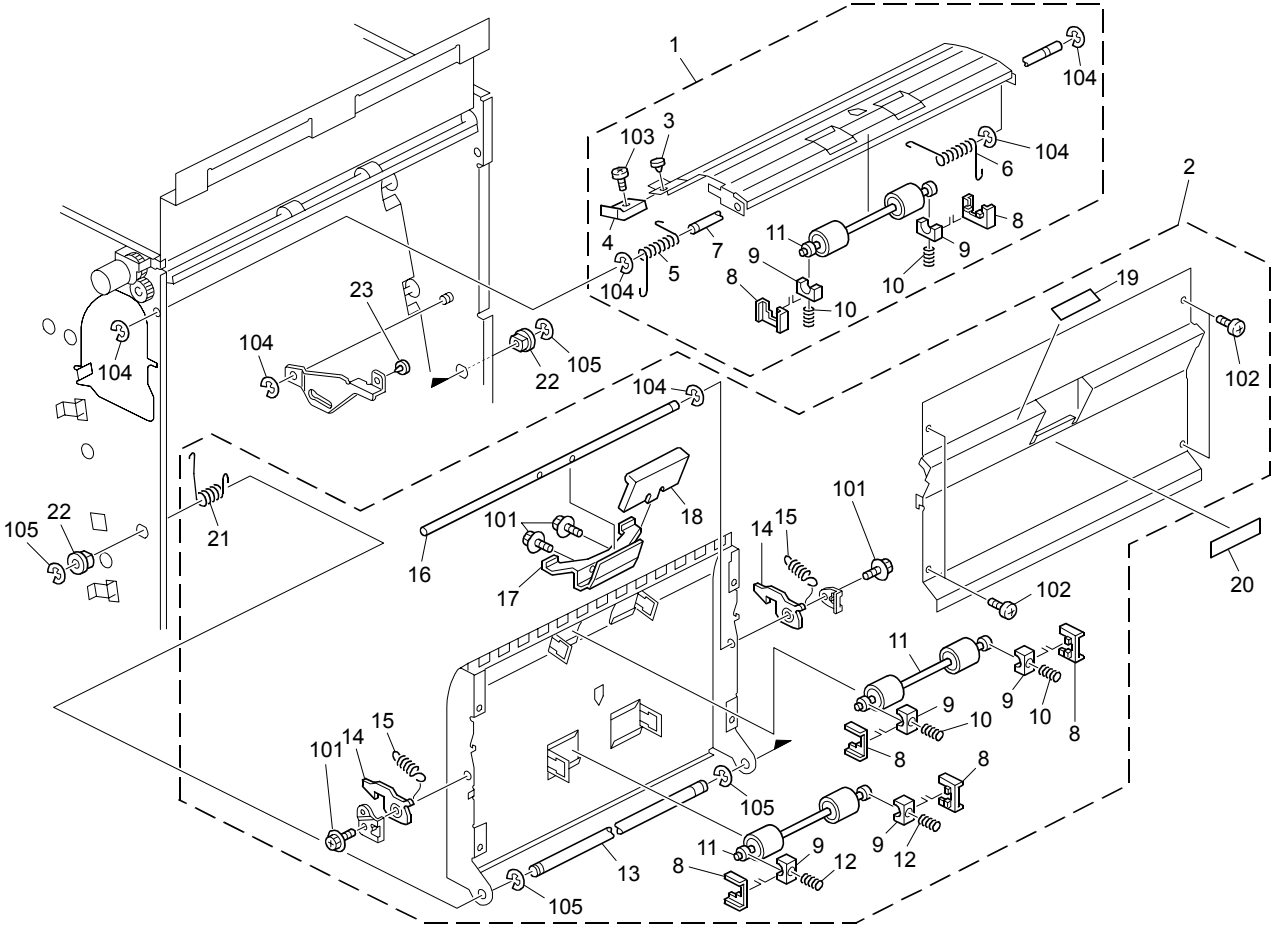

4.Paper Transfer 2 (D751)

Index No.	Part No.	Description	Q'ty Per Assembly
1	D751 1557	Guide:Right Upper	1
2	D751 1629	Guide:Right Middle	1
3	G178 7667	Rubber Foot	1
4	AG05 1141	Release Lever	1
5	M379 1566	Coil Spring:Left Upper	1
6	M379 1567	Coil Spring:Right Upper	1
7	M379 1588	Shaft:Hinge:Right Upper	1
8	G178 7790	Holder:Roller:On-Off	6
9	AA08 4059	Ball Bearing Holder	6
10	AA06 3674	Spring - 8N	4
11	M379 1627	Transport Roller:Driven	3
12	AA06 3678	Spring - 3.5N	2
13	M379 1564	Shaft:Contact Point:Frame	1
14	G178 4815	Lever:Lock:Left Lower:Frame	2
15	G178 6870	Tension Spring	2
16	M379 1541	Shaft:Lock:Upper	1
17	M379 1540	Handle:Lock:Frame:Upper	1
18	B234 6424	Release Grip	1
19	M379 1675	Decal:Operate:Guide	1
20	M379 1666	Decal:Grip:KC6	1
21	G178 4838	Spring:Open And Close:Left Lower	1
22	AA08 2104	Bushing - 8x12x7	2
23	G178 4852	Rubber Foot:7086082	1

Index No.	Part No.	Description	Q'ty Per Assembly
101	0451 3006N	Tapping Screw - 3x6	
102	0453 4008N	Binding Self Tapping Screw:4x8	
103	0313 0040N	Screw:M3x4	
104	0720 0040E	Retaining Ring - M4	
105	0720 0060E	Retaining Ring - M6	

5.Paper Transfer 3 (D751)

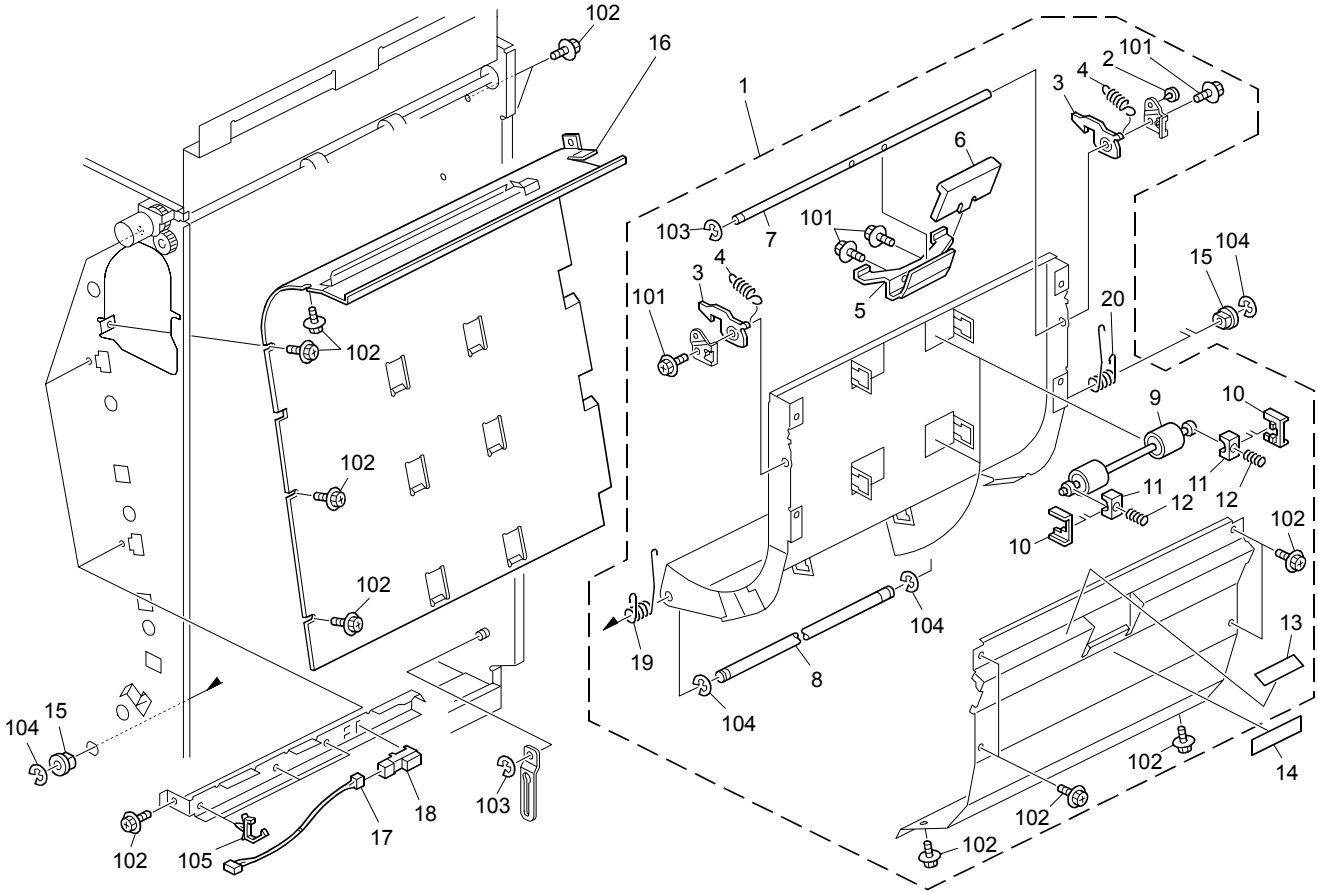

5.Paper Transfer 3 (D751)

Index No.	Part No.	Description	Q'ty Per Assembly
1	M379 1631	Guide:Right Lower	1
2	G178 4852	Rubber Foot:7086082	1
3	G178 4815	Lever:Lock:Left Lower:Frame	2
4	G178 6870	Tension Spring	2
5	M379 1603	Handle:Lock:Frame:Lower	1
6	B234 6424	Release Grip	1
7	M379 1604	Shaft:Lock:Lower	1
8	M379 1564	Shaft:Contact Point:Frame	1
9	M379 1627	Transport Roller:Driven	3
10	G178 7790	Holder:Roller:On-Off	6
11	AA08 4059	Ball Bearing Holder	6
12	AA06 3674	Spring - 8N	6
13	M379 1675	Decal:Operate:Guide	1
14	M379 1667	Decal:Grip:KC7	1
15	AA08 2104	Bushing - 8x12x7	2
16	M379 1560	Guide Plate:Vertical Transport:Right	1
17	M379 1762	Harness:Transport Unit:Sensor	3
18	AW01 0107	Paper Feed Sensor	3
19	M379 1652	Coil Spring:Open And Close:Lower Front:DIA2.6	1
20	M379 1653	Coil Spring:Open And Close:Lower Rear:DIA2.6	1

Index No.	Part No.	Description	Q'ty Per Assembly
101	0451 3006N	Tapping Screw - 3x6	
102	0451 4008N	Tapping Screw:4x8	
103	0720 0040E	Retaining Ring - M4	
104	0720 0060E	Retaining Ring - M6	
105	1105 0511	Harness Clamp - LWS-0306ZC	

6.Paper Transfer 4 (D751)

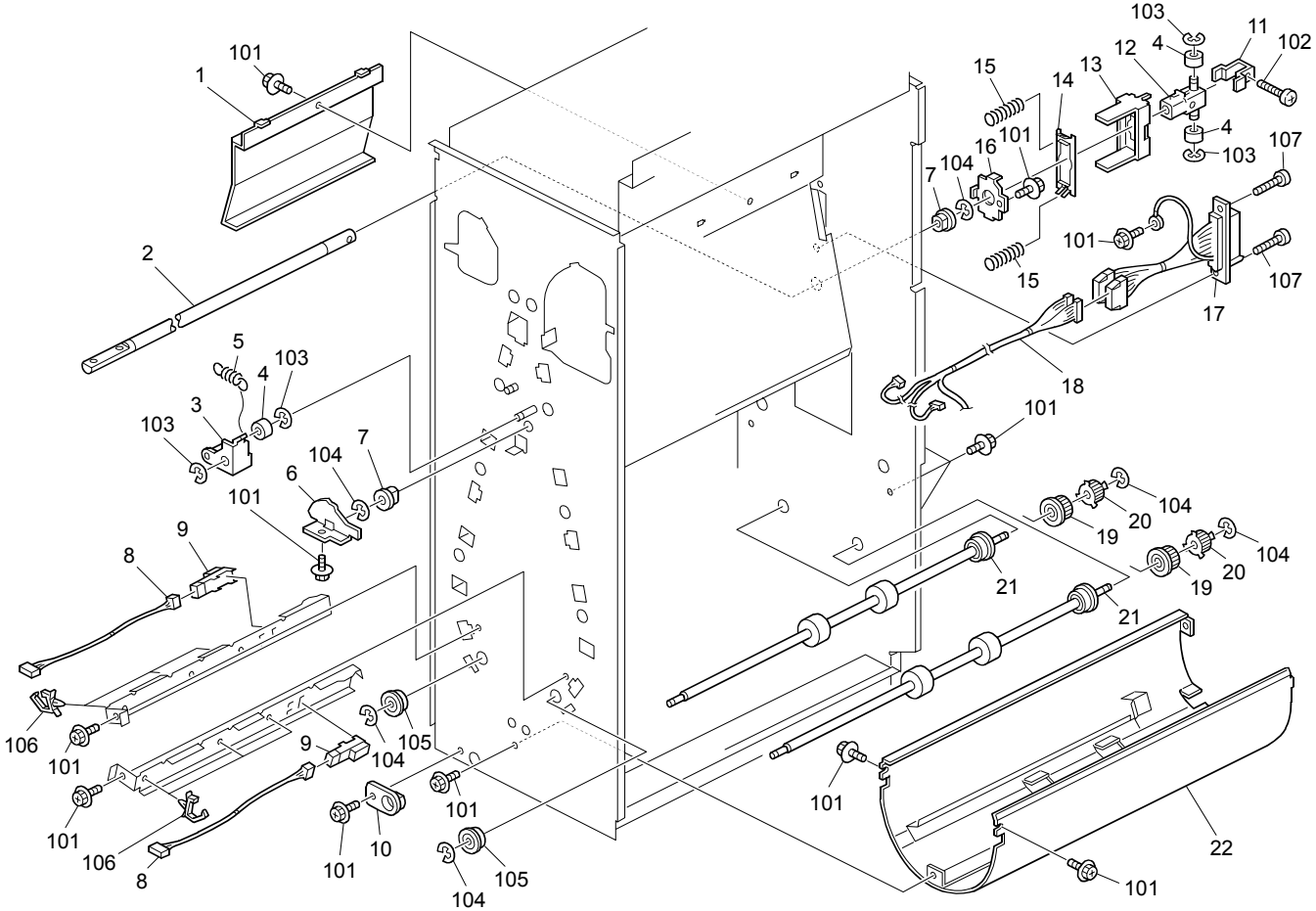

6.Paper Transfer 4 (D751)

Index No.	Part No.	Description	Q'ty Per Assembly
1	M379 1602	Cover:Harness:Drawer	1
2	G178 4623	Shaft:Lock:Lever	1
3	G178 4802	Lever:Latch:Handle	1
4	AA13 2300	Roller:Lock:Pull Out	3
5	G178 7651	Tension Spring:Registration	1
6	G178 4801	Cam:Latch:Handle	1
7	AA08 2104	Bushing - 8x12x7	2
8	M379 1762	Harness:Transport Unit:Sensor	2
9	AW01 0107	Paper Feed Sensor	2
10	G178 7743	Boss:Positioning Pin:Transport Unit:No.1	1
11	B132 1224	Supporting Plate:Bracket:Lock	1
12	B132 1183	Bracket:Lock	1
13	G178 4759	Bracket:Lock:Exit	1
14	B132 1221	Holder:Spring:Pull Out	1
15	G178 4818	Spring:Pull Out:Lock:Exit	2
16	G178 4848	Holder:Handle:Latch:Spring	1
17	M379 1760	Harness:Transport Unit:Drawer:Connecting	1
18	D751 1761	Harness:Transport Unit:Sensor:Connecting	1
19	AB03 0081	Pulley - 20Z	2
20	AB03 0802	Timing Pulley - 24T	2
21	G178 4943	Transport Roller:Duplex	2
22	M379 1525	Guide Plate:Lower	1

Index No.	Part No.	Description	Q'ty Per Assembly
101	0451 4008N	Tapping Screw:4x8	
102	0314 0180N	Pan Head Screw:M4x18	
103	0720 0040E	Retaining Ring - M4	
104	0720 0060E	Retaining Ring - M6	
105	0741 3808	Ball Bearing - 8x16x5mm	
106	1105 0511	Harness Clamp - LWS-0306ZC	
107	0353 0100N	Screw-M3x10	

7.Paper Transfer 5 (D751)

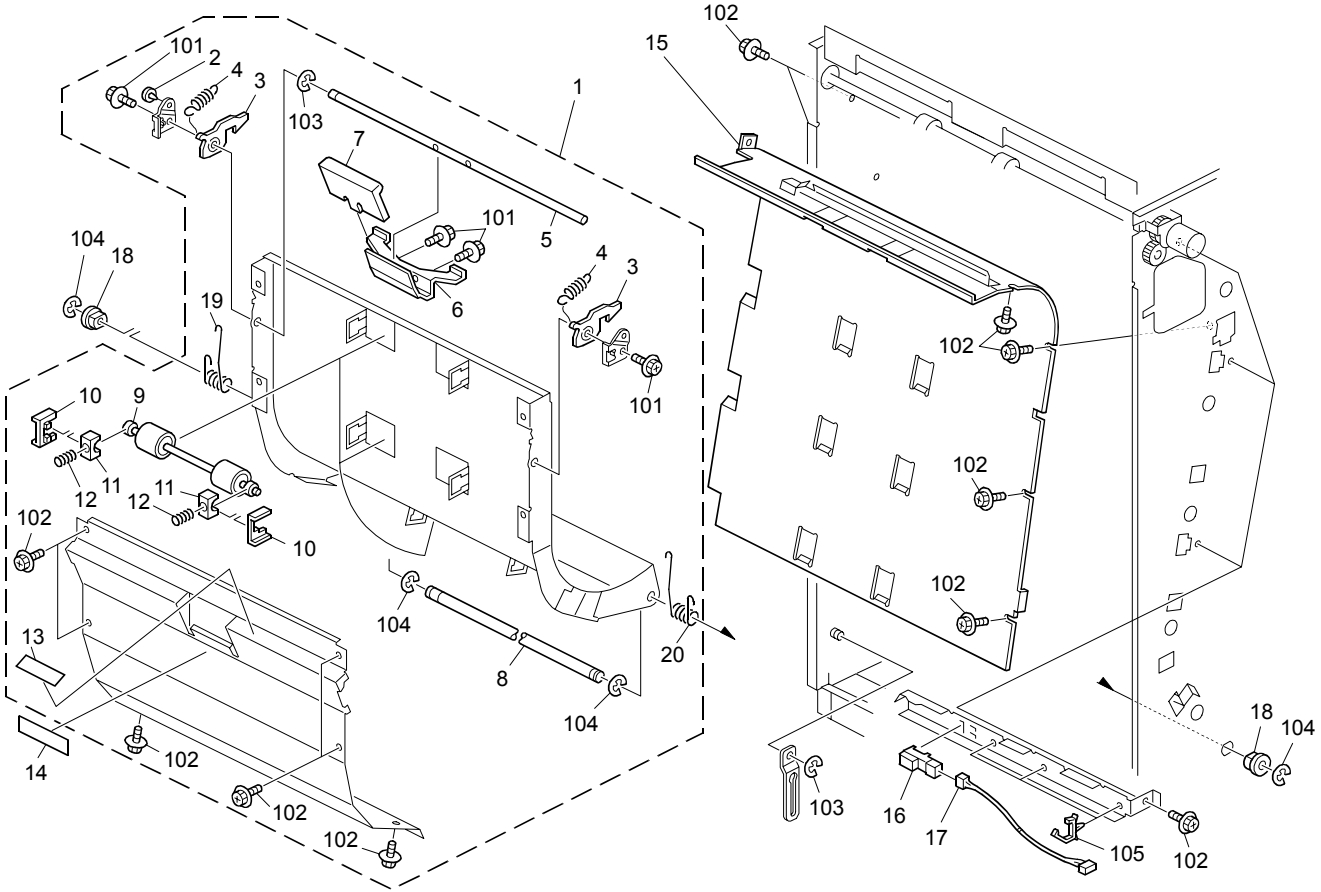

7.Paper Transfer 5 (D751)

Index No.	Part No.	Description	Q'ty Per Assembly
1	M379 1632	Guide:Left Lower	1
2	G178 4852	Rubber Foot:7086082	1
3	G178 4815	Lever:Lock:Left Lower:Frame	2
4	G178 6870	Tension Spring	2
5	M379 1604	Shaft:Lock:Lower	1
6	M379 1603	Handle:Lock:Frame:Lower	1
7	B234 6424	Release Grip	1
8	M379 1564	Shaft:Contact Point:Frame	1
9	M379 1627	Transport Roller:Driven	3
10	G178 7790	Holder:Roller:On-Off	6
11	AA08 4059	Ball Bearing Holder	6
12	AA06 3674	Spring - 8N	6
13	M379 1675	Decal:Operate:Guide	1
14	M379 1668	Decal:Grip:KC8	1
15	D751 1562	Guide Plate:Vertical Transport:Left	1
16	AW01 0107	Paper Feed Sensor	3
17	M379 1762	Harness:Transport Unit:Sensor	3
18	AA08 2104	Bushing - 8x12x7	2
19	M379 1653	Coil Spring:Open And Close:Lower Rear:DIA2.6	1
20	M379 1652	Coil Spring:Open And Close:Lower Front:DIA2.6	1

Index No.	Part No.	Description	Q'ty Per Assembly
101	0451 3006N	Tapping Screw - 3x6	
102	0451 4008N	Tapping Screw:4x8	
103	0720 0040E	Retaining Ring - M4	
104	0720 0060E	Retaining Ring - M6	
105	1105 0511	Harness Clamp - LWS-0306ZC	

8.Paper Transfer 6 (D751)

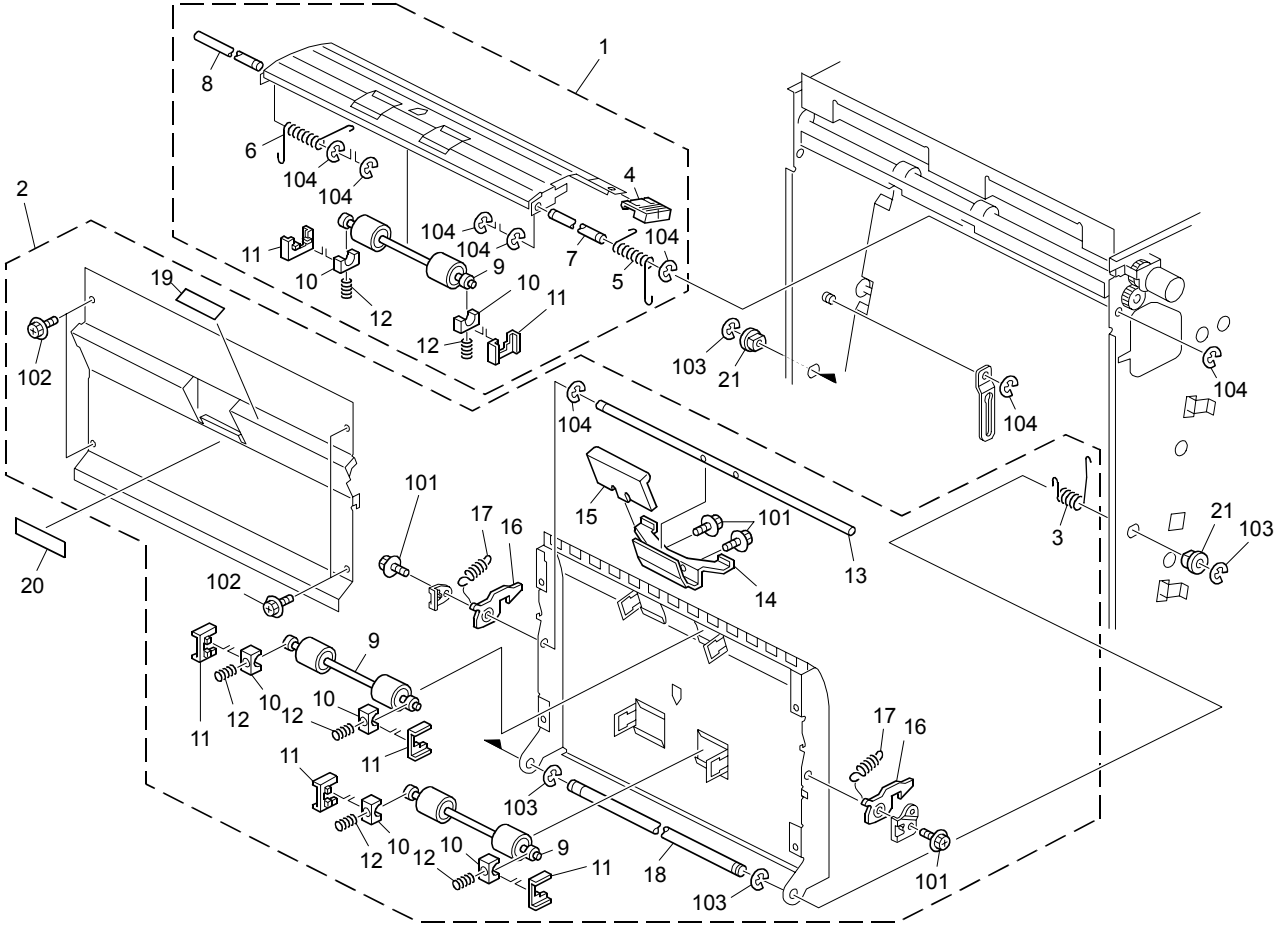

8.Paper Transfer 6 (D751)

Index No.	Part No.	Description	Q'ty Per Assembly
1	D751 1628	Guide:Left Upper	1
2	D751 1630	Guide:Left Middle	1
3	M379 1641	Coil Spring:Open And Close:Left Upper:DIA2.6	1
4	D447 2564	Knob:Turn	1
5	M379 1566	Coil Spring:Left Upper	1
6	M379 1567	Coil Spring:Right Upper	1
7	M379 1549	Shaft:Hinge:Exit	1
8	M379 1533	Shaft:Hinge:Left	1
9	M379 1627	Transport Roller:Driven	3
10	AA08 4059	Ball Bearing Holder	6
11	G178 7790	Holder:Roller:On-Off	6
12	AA06 3674	Spring - 8N	6
13	M379 1541	Shaft:Lock:Upper	1
14	M379 1540	Handle:Lock:Frame:Upper	1
15	B234 6424	Release Grip	1
16	G178 4815	Lever:Lock:Left Lower:Frame	2
17	G178 6870	Tension Spring	2
18	M379 1564	Shaft:Contact Point:Frame	1
19	M379 1675	Decal:Operate:Guide	1
20	M379 1669	Decal:Grip:KC9	1
21	AA08 2104	Bushing - 8x12x7	2

Index No.	Part No.	Description	Q'ty Per Assembly
101	0451 3006N	Tapping Screw - 3x6	
102	0451 4008N	Tapping Screw:4x8	
103	0720 0060E	Retaining Ring - M6	
104	0720 0040E	Retaining Ring - M4	

9.Paper Transfer 7 (D751)

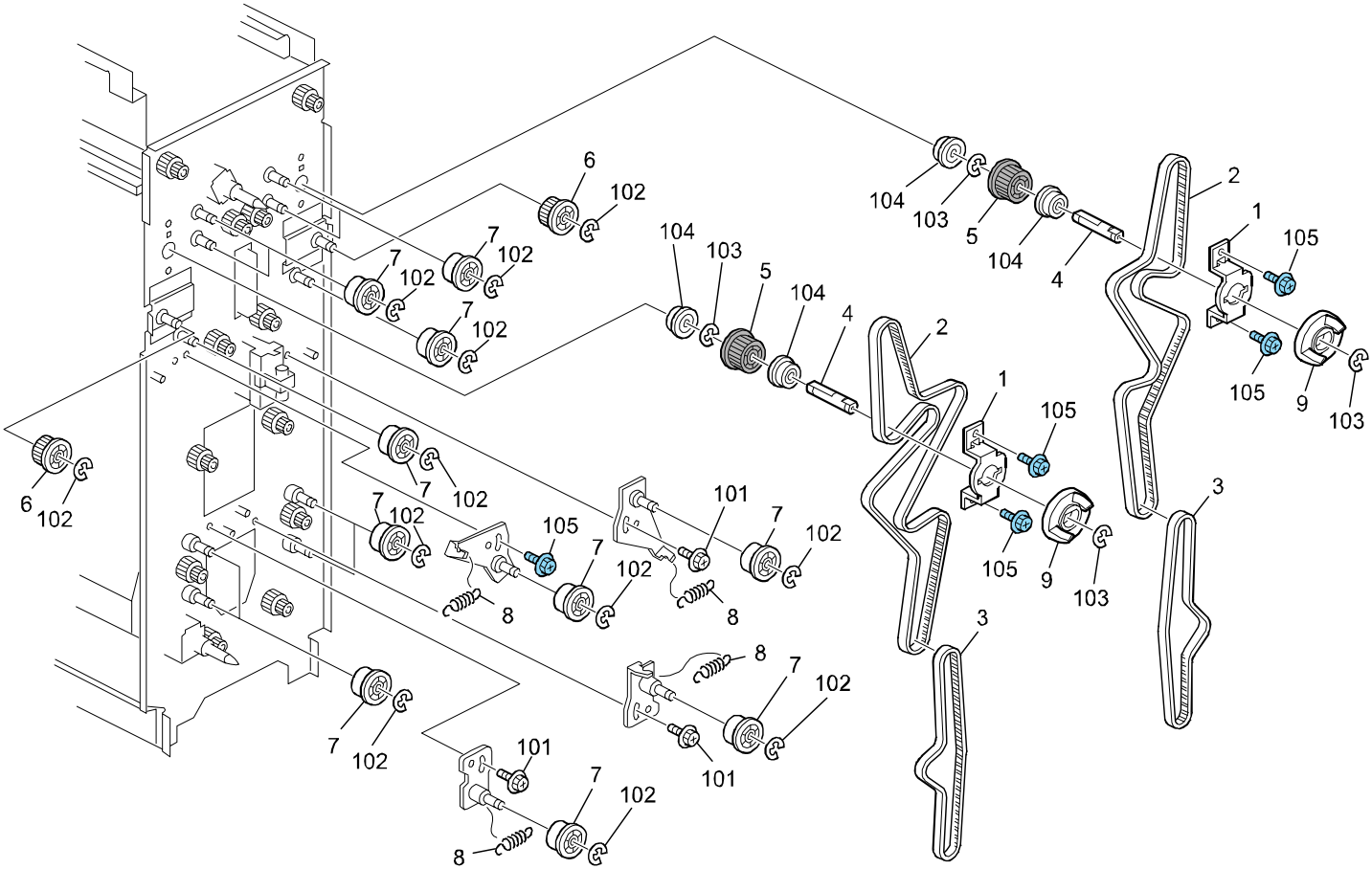

9.Paper Transfer 7 (D751)

Index No.	Part No.	Description	Q'ty Per Assembly
1	M379 1501	Bracket:Bearing	2
2	AA04 3434	Timing Belt:60S3M999	2
3	M379 1599	Timing Belt:B60S2M520	2
4	D548 1593	Shaft:Drive:Coupling:Cooling Unit	2
5	AB03 0805	Pulley:Coupling:30T	2
6	M379 1565	Pulley:Tightener:T20	2
7	AB03 0310	Tightener Pulley	14
8	G178 4794	Spring:Tensioner:Exit	4
9	D548 1592	Joint:Drive:Cooling Unit	2

Index No.	Part No.	Description	Q'ty Per Assembly
101	0451 4008N	Tapping Screw:4x8	
102	0720 0040E	Retaining Ring - M4	
103	0720 0060E	Retaining Ring - M6	
104	0741 3808	Ball Bearing - 8x16x5mm	
105	0454 4008Q	Tapping Screw - M4x8	

10.Electrical Section 1 (D751)

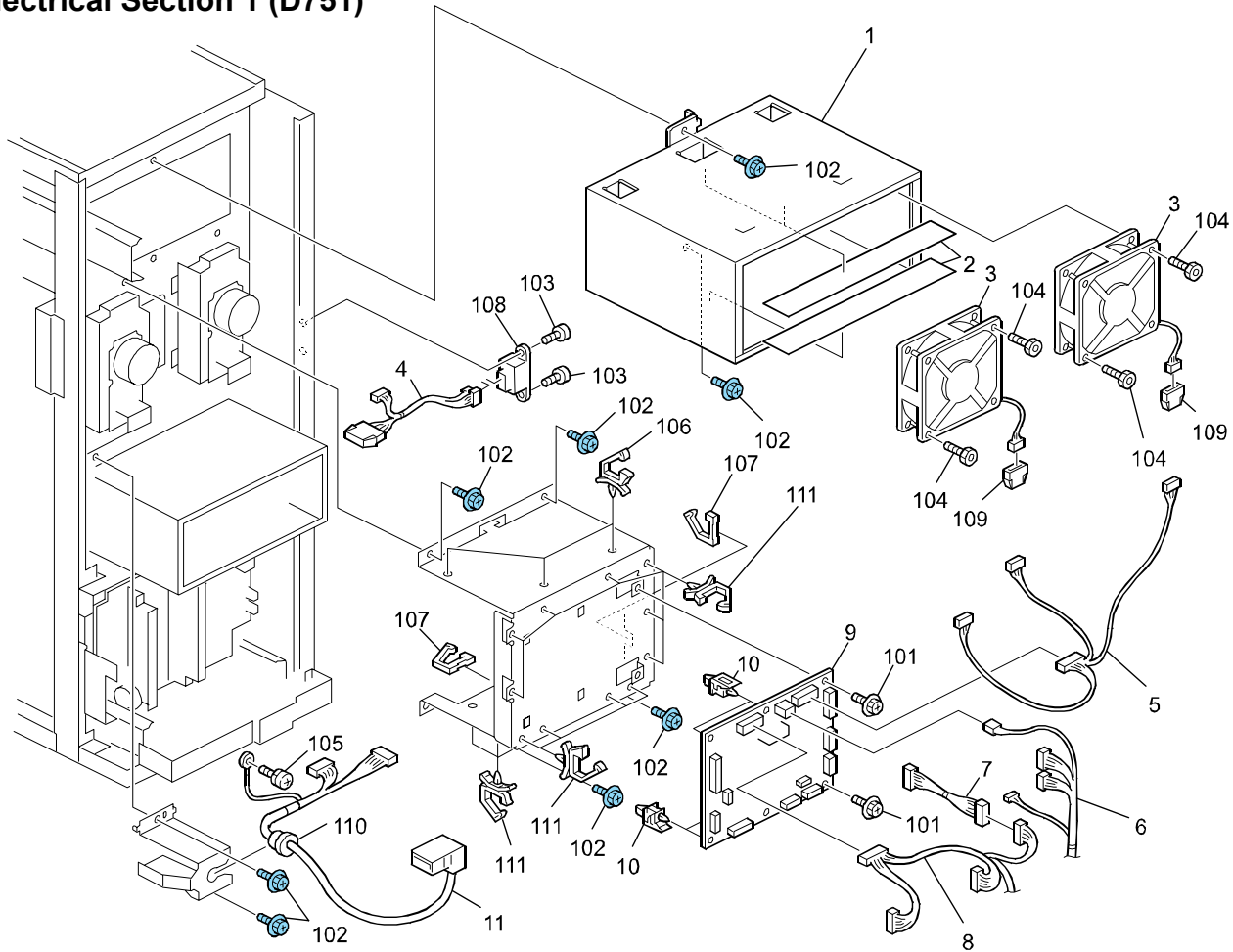

10.Electrical Section 1 (D751)

Index No.	Part No.	Description	Q'ty Per Assembly
1	M379 1310	Duct:Cooling Unit:Fan	1
2	M379 1315	Seal:Duct	3
3	AX64 0220	DC Fan Motor:8.88W	2
4	M379 1757	Harness:Interface:Rear	1
5	M379 1754	Harness:CTB:Fan:No.1	1
6	D751 5001	Harness:Power Source:CTB:Fan	1
7	M379 1753	Harness:CTB:Motor:No.2:Connecting	1
8	D751 1751	Harness:Power Source:CTB:Motor	1
9	D751 1800	PCB:CTB	1
10	G178 7668	Spacer:7907032:Base	4
11	B835 5300	Harness - Interface	1

Index No.	Part No.	Description	Q'ty Per Assembly
101	0451 3006N	Tapping Screw - 3x6	
102	0454 4008Q	Tapping Screw - M4x8	
103	0353 0060N	Bind Screw - M3x6	
104	0594 0080E	Bolt - M4x8	
105	0954 4008N	Screw - M4x8	
106	1105 0487	Harness Clamp	
107	1105 0724	Wing Edge Saddle - WES-1210	
108	1102 8502	Connector - 54679-1615	
109	1102 6246	Relay Connector - 3P	
110	1106 0289	Bushing - SR-5N-1	
111	1105 0488	Harness Clamp	

11.Electrical Section 2 (D751)

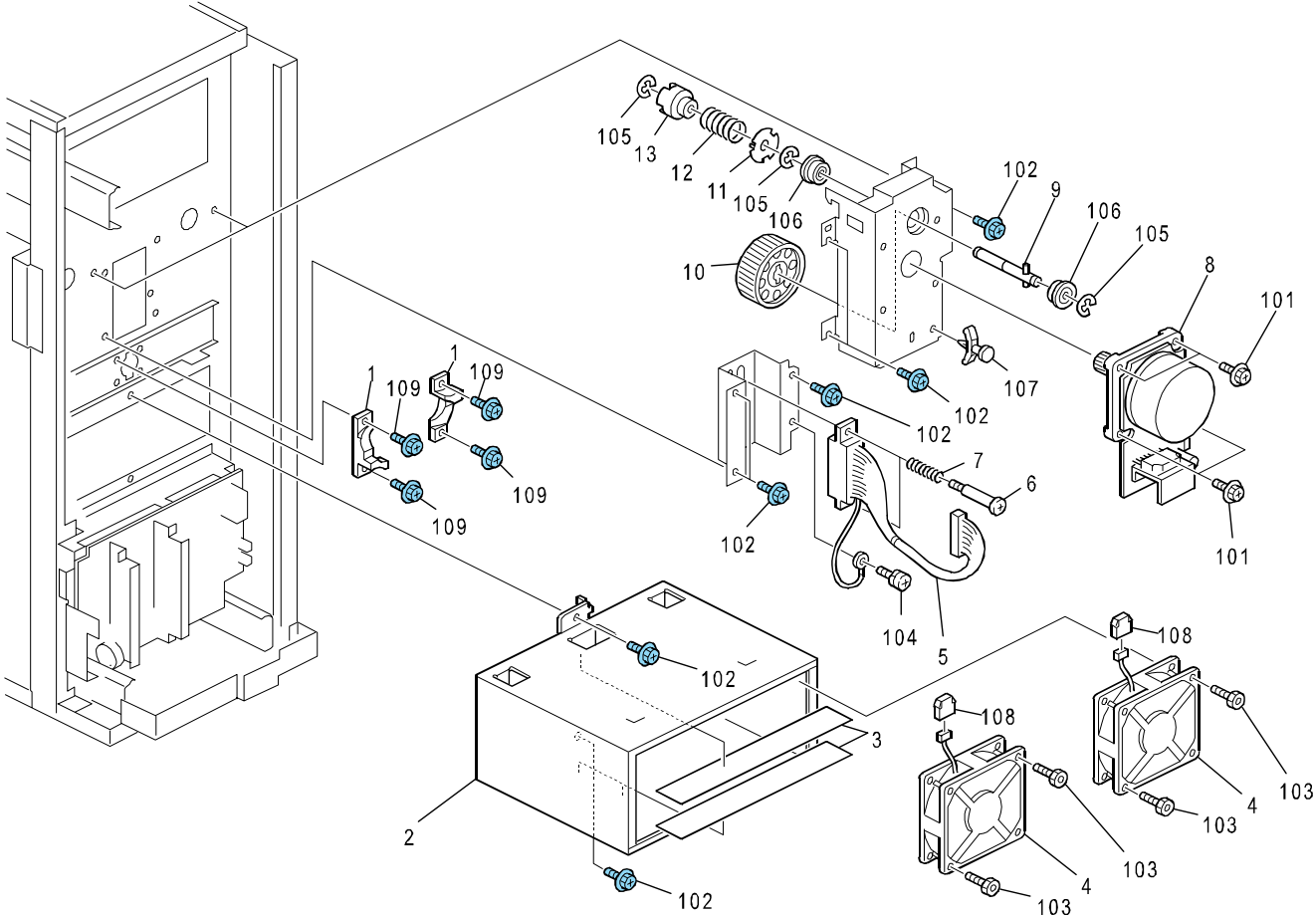

11.Electrical Section 2 (D751)

Index No.	Part No.	Description	Q'ty Per Assembly
1	G178 1122	Guide:Lock:Transport Unit	2
2	M379 1310	Duct:Cooling Unit:Fan	1
3	M379 1315	Seal:Duct	3
4	AX64 0220	DC Fan Motor:8.88W	2
5	M379 1756	Harness:CTB:Transport Unit:Drawer	1
6	AA14 3797	Connector Guide Pin	2
7	G178 4866	Compression Spring:Exit:Connector	2
8	D548 1635	DC Brushless Motor:Ass'y	1
9	G178 4573	Shaft:Drive:Motor:Press Fit	1
10	M379 1686	Gear:Joint:66Z	1
11	B234 4320	Holder:Compression Spring:Joint	1
12	AA06 3691	Compression Spring:Joint	1
13	M379 1598	Joint:Transport Unit:Drive	1

Index No.	Part No.	Description	Q'ty Per Assembly
101	0451 4008N	Tapping Screw:4x8	
102	0454 4008Q	Tapping Screw - M4x8	
103	0594 0080E	Bolt - M4x8	
104	0954 4008N	Screw - M4x8	
105	0720 0060E	Retaining Ring - M6	
106	0741 3808	Ball Bearing - 8x16x5mm	
107	1105 0409	Card Spacer - 6.4mm	
108	1102 6246	Relay Connector - 3P	
109	0454 4010Q	Tapping Screw:4x10	

12.Electrical Section 3 (D751)

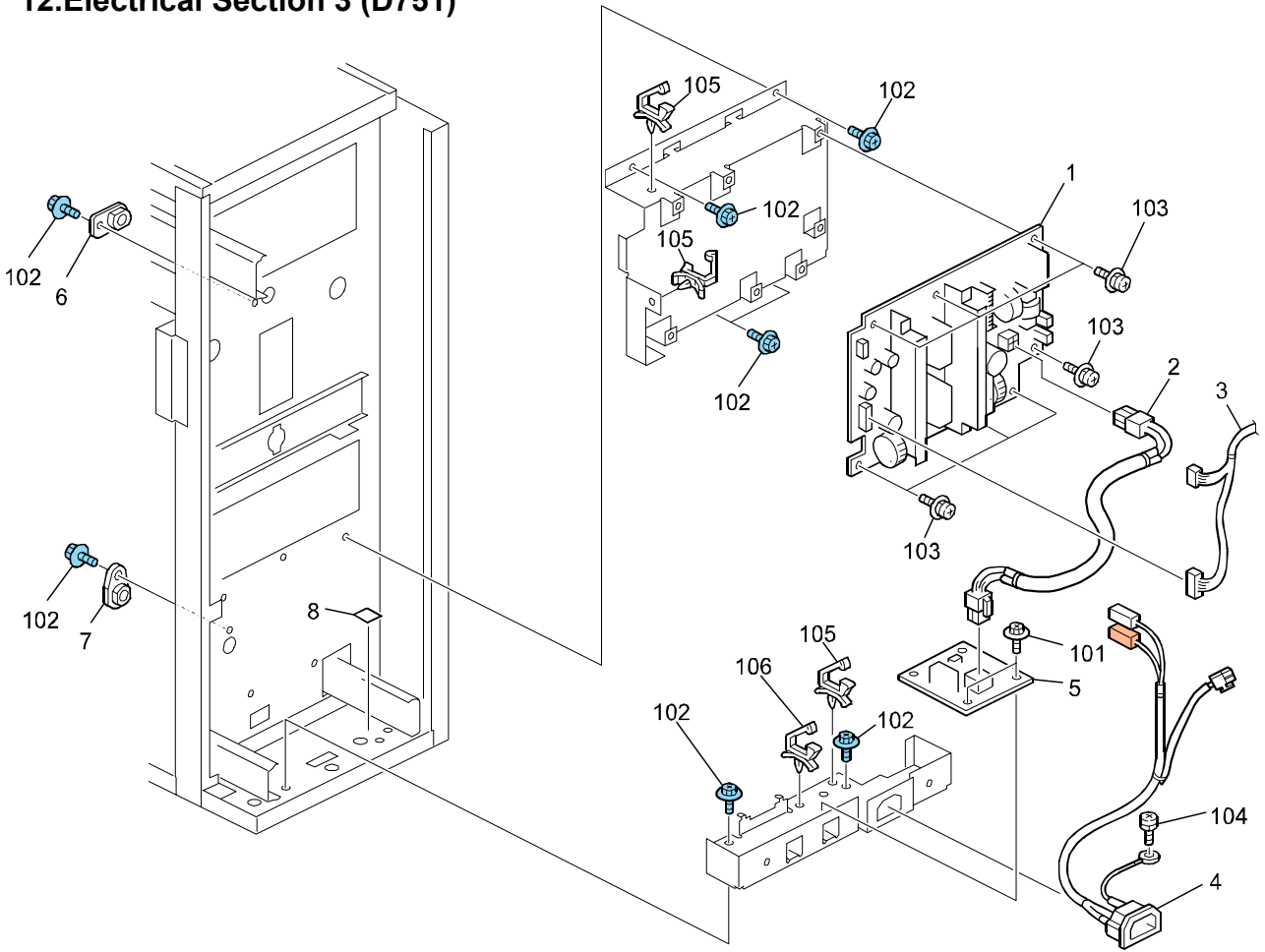

12.Electrical Section 3 (D751)

Index No.	Part No.	Description	Q'ty Per Assembly
1	AZ23 0259	Power Supply Unit:S-C5:100V	1
1	AZ23 0261	Power Supply Unit:S-C5:200V	1
2	D751 1763	Harness:AC:SRB:Power Source	1
3	D751 5001	Harness:Power Source:CTB:Fan	1
4	D751 1750	Harness:AC:Inlet:Power Source	1
5	M379 1710	PCB:SRB	1
6	G178 7743	Boss:Positioning Pin:Transport Unit:No.1	1
7	G178 7744	Boss:Positioning Pin:Transport Unit:No.2	1
8	M379 1415	Decal:Earth	1

Index No.	Part No.	Description	Q'ty Per Assembly
101	0451 3006N	Tapping Screw - 3x6	
102	0454 4008Q	Tapping Screw - M4x8	
103	0954 3006N	Screw - M3x6	
104	0954 4008N	Screw - M4x8	
105	1105 0487	Harness Clamp	
106	1105 0488	Harness Clamp	

13.Electrical Section 4 (D751)

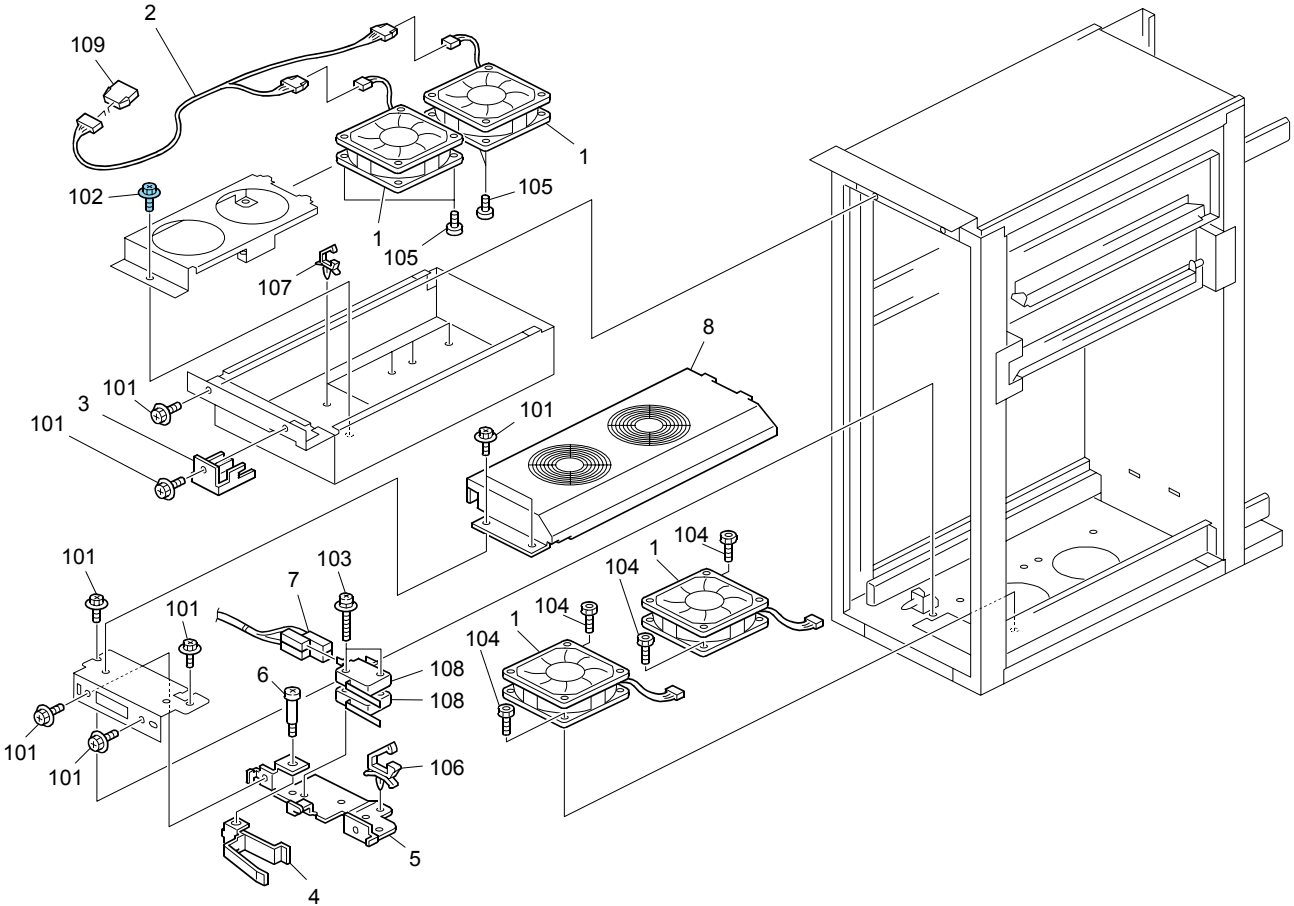

13.Electrical Section 4 (D751)

Index No.	Part No.	Description	Q'ty Per Assembly
1	AX64 0220	DC Fan Motor:8.88W	4
2	M379 1755	Harness:Upper:Cooling:Fan	1
3	M379 1109	Cover:Upper:Harness	1
4	G178 5493	Lever:Safety Switch:Front	1
5	G178 5499	Bracket:Safety Switch:Front	1
6	AA14 3797	Connector Guide Pin	1
7	D751 1752	Harness:Cover:Switch:Connecting	1
8	M379 1125	Cover:Fan:Lower	1

Index No.	Part No.	Description	Q'ty Per Assembly
101	0451 4008N	Tapping Screw:4x8	
102	0454 4006Q	Tapping Screw:4x6	
103	0954 3025N	Screw:Polished Round/Spring:M3x25	
104	0594 0080E	Bolt - M4x8	
105	0354 0080N	Screw:M4x8	
106	1105 0487	Harness Clamp	
107	1105 0511	Harness Clamp - LWS-0306ZC	
108	1204 2612	Micro Switch	
109	1102 6252	Relay Connector	

14.Frame Section (D751)

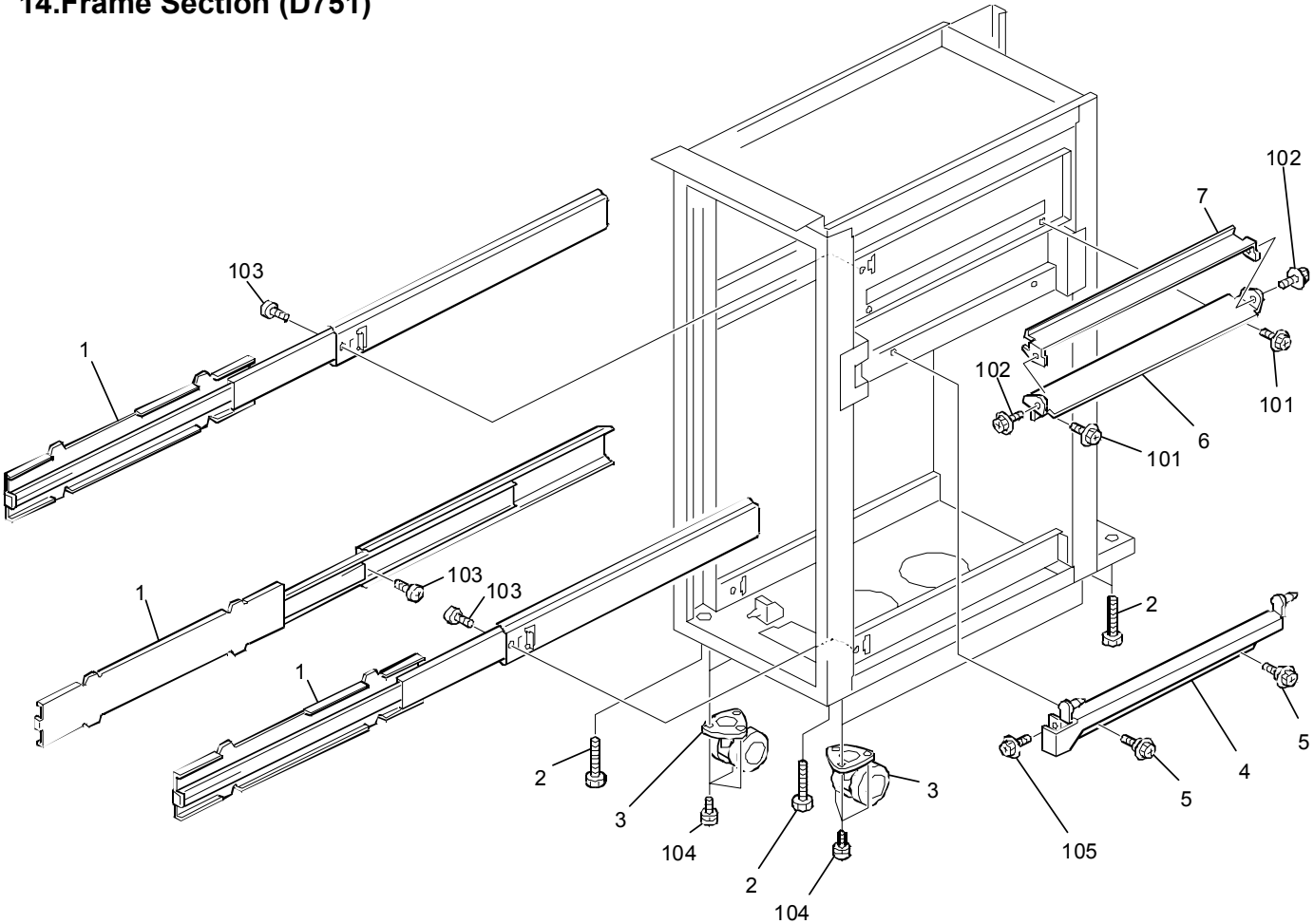

14.Frame Section (D751)

Index No.	Part No.	Description	Q'ty Per Assembly
1	G178 4746	Slide Rail:Exit	3
2	B834 1089	Hexagonal Bolt - M12x50	4
3	B804 1035	Caster:DIA50:400N	4
4	B835 1181	Coupling Lever	1
5	AA14 3790	Screw:Contact Point	2
6	M379 1581	Guide:Connecting:Entrance:Lower	1
7	D548 1580	Guide:Connecting:Entrance:Upper	1

Index No.	Part No.	Description	Q'ty Per Assembly
101	0451 4008N	Tapping Screw:4x8	
102	0454 3006N	Tapping Screw:Round Point:3x6	
103	0354 0080N	Screw:M4x8	
104	0954 5010N	Screw:Polished Round/Spring:M5x10	
105	0451 3006N	Tapping Screw - 3x6	

Parts Index

Part No.	Description	Page and Index No.
D751 1239	Stand:Un Lock	5 - 8
D751 1240	Door:Knob	5 - 1
D751 1250	Cover:Front	5 - 2
D751 1251	Cover:Front:Inner Cover	5 - 4
D751 1259	Cover:Upper:Coat	3 - 2
D751 1264	Cover:Rear	3 - 3
D751 1277	Cover:Side:Left	3 - 1
D751 1557	Guide:Right Upper	9 - 1
D751 1562	Guide Plate:Vertical Transport:Left	15 - 15
D751 1628	Guide:Left Upper	17 - 1
D751 1629	Guide:Right Middle	9 - 2
D751 1630	Guide:Left Middle	17 - 2
D751 1677	Sheet:Guide Plate:Enterance	3 - 8
D751 1750	Harness:AC:Inlet:Power Source	25 - 4
D751 1751	Harness:Power Source:CTB:Motor	21 - 8
D751 1752	Harness:Cover:Switch:Connecting	27 - 7
D751 1761	Harness:Transport Unit:Sensor:Connecting	13 - 18
D751 1763	Harness:AC:SRB:Power Source	25 - 2
D751 1800	PCB:CTB	21 - 9
D751 5001	Harness:Power Source:CTB:Fan	25 - 3
D751 5001	Harness:Power Source:CTB:Fan	21 - 6

Part No.	Description	Page and Index No.
B132 1183	Bracket:Lock	13 - 12
B132 1221	Holder:Spring:Pull Out	13 - 14
B132 1224	Supporting Plate:Bracket:Lock	13 - 11
B132 1226	Holder:Stand	3 - 9
B234 1293	Lever - Safety Switch	5 - 9
B234 2793	Button	7 - 14
B234 4320	Holder:Compression Spring:Joint	23 - 11
B234 6424	Release Grip	9 - 18
B234 6424	Release Grip	17 - 15
B234 6424	Release Grip	15 - 7
B234 6424	Release Grip	11 - 6
B302 7531	Cushion -10x15x585	3 - 5
B804 1035	Caster:DIA50:400N	29 - 3
B834 1089	Hexagonal Bolt - M12x50	29 - 2
B835 1181	Coupling Lever	29 - 4
B835 1191	Coupling Bracket - Rear	3 - 10
B835 1195	Coupling Bracket - Front	3 - 11
B835 5300	Harness - Interface	21 - 11
D355 4572	Decal:Paper Tray:Warning	7 - 9
D447 2564	Knob:Turn	17 - 4
D548 1580	Guide:Connecting:Entrance:Upper	29 - 7
D548 1592	Joint:Drive:Cooling Unit	19 - 9
D548 1593	Shaft:Drive:Coupling:Cooling Unit	19 - 4
D548 1635	DC Brushless Motor:Ass'y	23 - 8
D548 8002	Bracket:Ground Plate:Ass' y	3 - 6
G166 1391	Decal:Earth:NE	3 - 12
G178 1122	Guide:Lock:Transport Unit	23 - 1
G178 4573	Shaft:Drive:Motor:Press Fit	23 - 9
G178 4623	Shaft:Lock:Lever	13 - 2
G178 4746	Slide Rail:Exit	29 - 1
G178 4759	Bracket:Lock:Exit	13 - 13
G178 4794	Spring:Tensioner:Exit	19 - 8
G178 4801	Cam:Latch:Handle	13 - 6

Part No.	Description	Page and Index No.
G178 4802	Lever:Latch:Handle	13 - 3
G178 4815	Lever:Lock:Left Lower:Frame	15 - 3
G178 4815	Lever:Lock:Left Lower:Frame	17 - 16
G178 4815	Lever:Lock:Left Lower:Frame	9 - 14
G178 4815	Lever:Lock:Left Lower:Frame	11 - 3
G178 4818	Spring:Pull Out:Lock:Exit	13 - 15
G178 4838	Spring:Open And Close:Left Lower	9 - 21
G178 4848	Holder:Handle:Latch:Spring	13 - 16
G178 4852	Rubber Foot:7086082	15 - 2
G178 4852	Rubber Foot:7086082	9 - 23
G178 4852	Rubber Foot:7086082	11 - 2
G178 4866	Compression Spring:Exit:Connector	23 - 7
G178 4909	Screw:Transport	5 - 17
G178 4943	Transport Roller:Duplex	13 - 21
G178 4943	Transport Roller:Duplex	7 - 2
G178 5493	Lever:Safety Switch:Front	27 - 4
G178 5499	Bracket:Safety Switch:Front	27 - 5
G178 6870	Tension Spring	9 - 15
G178 6870	Tension Spring	15 - 4
G178 6870	Tension Spring	11 - 4
G178 6870	Tension Spring	17 - 17
G178 7651	Tension Spring:Registration	13 - 5
G178 7667	Rubber Foot	9 - 3
G178 7668	Spacer:7907032:Base	21 - 10
G178 7743	Boss:Positioning Pin:Transport Unit:No.1	25 - 6
G178 7743	Boss:Positioning Pin:Transport Unit:No.1	13 - 10
G178 7744	Boss:Positioning Pin:Transport Unit:No.2	25 - 7
G178 7790	Holder:Roller:On-Off	11 - 10
G178 7790	Holder:Roller:On-Off	17 - 11
G178 7790	Holder:Roller:On-Off	9 - 8
G178 7790	Holder:Roller:On-Off	15 - 10
M379 1109	Cover:Upper:Harness	27 - 3
M379 1125	Cover:Fan:Lower	27 - 8

Part No.	Description	Page and Index No.
M379 1220	Hinge:Door:Front	5 - 15
M379 1223	Hinge:Door:Lower	5 - 16
M379 1226	Plate:Magnet Catch	5 - 18
M379 1244	Stopper:Cover:Front	5 - 19
M379 1270	Cover:Side:Right	3 - 4
M379 1310	Duct:Cooling Unit:Fan	23 - 2
M379 1310	Duct:Cooling Unit:Fan	21 - 1
M379 1315	Seal:Duct	23 - 3
M379 1315	Seal:Duct	21 - 2
M379 1415	Decal:Earth	25 - 8
M379 1501	Bracket:Bearing	19 - 1
M379 1525	Guide Plate:Lower	13 - 22
M379 1530	Shaft:Knob	7 - 7
M379 1531	Bracket:Knob	7 - 5
M379 1533	Shaft:Hinge:Left	17 - 8
M379 1540	Handle:Lock:Frame:Upper	9 - 17
M379 1540	Handle:Lock:Frame:Upper	17 - 14
M379 1541	Shaft:Lock:Upper	17 - 13
M379 1541	Shaft:Lock:Upper	9 - 16
M379 1549	Shaft:Hinge:Exit	17 - 7
M379 1560	Guide Plate:Vertical Transport:Right	11 - 16
M379 1564	Shaft:Contact Point:Frame	15 - 8
M379 1564	Shaft:Contact Point:Frame	9 - 13
M379 1564	Shaft:Contact Point:Frame	17 - 18
M379 1564	Shaft:Contact Point:Frame	11 - 8
M379 1565	Pulley:Tightener:T20	19 - 6
M379 1566	Coil Spring:Left Upper	9 - 5
M379 1566	Coil Spring:Left Upper	17 - 5
M379 1567	Coil Spring:Right Upper	9 - 6
M379 1567	Coil Spring:Right Upper	17 - 6
M379 1581	Guide:Connecting:Entrance:Lower	29 - 6
M379 1585	Bracket:Guide Plate:Positioning	7 - 17
M379 1587	Slider:Un Lock	7 - 15

Part No.	Description	Page and Index No.
M379 1588	Shaft:Hinge:Right Upper	9 - 7
M379 1596	Sheet:Guide Plate:Finishing Section	3 - 7
M379 1598	Joint:Transport Unit:Drive	23 - 13
M379 1599	Timing Belt:B60S2M520	19 - 3
M379 1602	Cover:Harness:Drawer	13 - 1
M379 1603	Handle:Lock:Frame:Lower	11 - 5
M379 1603	Handle:Lock:Frame:Lower	15 - 6
M379 1604	Shaft:Lock:Lower	15 - 5
M379 1604	Shaft:Lock:Lower	11 - 7
M379 1609	Inner Cover:Transport Unit	5 - 10
M379 1623	Transport Roller:Knob	7 - 1
M379 1627	Transport Roller:Driven	15 - 9
M379 1627	Transport Roller:Driven	9 - 11
M379 1627	Transport Roller:Driven	17 - 9
M379 1627	Transport Roller:Driven	11 - 9
M379 1631	Guide:Right Lower	11 - 1
M379 1632	Guide:Left Lower	15 - 1
M379 1641	Coil Spring:Open And Close:Left Upper:DIA2.6	17 - 3
M379 1652	Coil Spring:Open And Close:Lower Front:DIA2.	15 - 20
M379 1652	Coil Spring:Open And Close:Lower Front:DIA2.	11 - 19
M379 1653	Coil Spring:Open And Close:Lower Rear:DIA2.6	15 - 19
M379 1653	Coil Spring:Open And Close:Lower Rear:DIA2.6	11 - 20
M379 1654	Decal:Pick-up Paper Jam:Lower	7 - 8
M379 1655	Decal:Pick-up Paper Jam:Upper	5 - 7
M379 1657	Decal:Transport Unit:Caution	7 - 10
M379 1661	Decal:Knob:KC1	5 - 12
M379 1662	Decal:Knob:KC2	5 - 13
M379 1663	Decal:Button:KC3	7 - 13
M379 1664	Decal:Knob:KC4	5 - 11
M379 1665	Lever:Pull Out:Transport:KC5	5 - 14
M379 1666	Decal:Grip:KC6	9 - 20
M379 1667	Decal:Grip:KC7	11 - 14
M379 1668	Decal:Grip:KC8	15 - 14

Part No.	Description	Page and Index No.
M379 1669	Decal:Grip:KC9	17 - 20
M379 1675	Decal:Operate:Guide	17 - 19
M379 1675	Decal:Operate:Guide	15 - 13
M379 1675	Decal:Operate:Guide	11 - 13
M379 1675	Decal:Operate:Guide	9 - 19
M379 1686	Gear:Joint:66Z	23 - 10
M379 1710	PCB:SRB	25 - 5
M379 1753	Harness:CTB:Motor:No.2:Connecting	21 - 7
M379 1754	Harness:CTB:Fan:No.1	21 - 5
M379 1755	Harness:Upper:Cooling:Fan	27 - 2
M379 1756	Harness:CTB:Transport Unit:Drawer	23 - 5
M379 1757	Harness:Interface:Rear	21 - 4
M379 1759	Harness:Earth:Cover	5 - 6
M379 1760	Harness:Transport Unit:Drawer:Connecting	13 - 17
M379 1762	Harness:Transport Unit:Sensor	11 - 17
M379 1762	Harness:Transport Unit:Sensor	13 - 8
M379 1762	Harness:Transport Unit:Sensor	15 - 17

Part No.	Description	Page and Index No.
AA04 3434	Timing Belt:60S3M999	19 - 2
AA06 3674	Spring - 8N	17 - 12
AA06 3674	Spring - 8N	11 - 12
AA06 3674	Spring - 8N	15 - 12
AA06 3674	Spring - 8N	9 - 10
AA06 3677	Spring	7 - 16
AA06 3678	Spring - 3.5N	9 - 12
AA06 3691	Compression Spring:Joint	23 - 12
AA08 2104	Bushing - 8x12x7	9 - 22
AA08 2104	Bushing - 8x12x7	13 - 7
AA08 2104	Bushing - 8x12x7	17 - 21
AA08 2104	Bushing - 8x12x7	11 - 15
AA08 2104	Bushing - 8x12x7	15 - 18
AA08 2104	Bushing - 8x12x7	7 - 6
AA08 4059	Ball Bearing Holder	11 - 11
AA08 4059	Ball Bearing Holder	9 - 9
AA08 4059	Ball Bearing Holder	17 - 10
AA08 4059	Ball Bearing Holder	15 - 11
AA13 2300	Roller:Lock:Pull Out	13 - 4
AA14 3790	Screw:Contact Point	29 - 5
AA14 3797	Connector Guide Pin	27 - 6
AA14 3797	Connector Guide Pin	23 - 6
AA14 3802	Screw:6x1.7	7 - 18
AB01 3751	Gear - 24Z	7 - 3
AB03 0081	Pulley - 20Z	13 - 19
AB03 0081	Pulley - 20Z	7 - 11
AB03 0310	Tightener Pulley	19 - 7
AB03 0802	Timing Pulley - 24T	13 - 20
AB03 0802	Timing Pulley - 24T	7 - 12
AB03 0805	Pulley:Coupling:30T	19 - 5
AG05 0101	Knob - Misfeed Removal	7 - 4
AG05 1141	Release Lever	9 - 4
AG07 0007	Magnet Catch	5 - 5

Part No.	Description	Page and Index No.
AW01 0107	Paper Feed Sensor	15 - 16
AW01 0107	Paper Feed Sensor	13 - 9
AW01 0107	Paper Feed Sensor	11 - 18
AX64 0220	DC Fan Motor:8.88W	21 - 3
AX64 0220	DC Fan Motor:8.88W	23 - 4
AX64 0220	DC Fan Motor:8.88W	27 - 1
AZ23 0259	Power Supply Unit:S-C5:100V	25 - 1
AZ23 0261	Power Supply Unit:S-C5:200V	25 - 1

Part No.	Description	Page and Index No.
0313 0040N	Screw:M3x4	9 - 103
0314 0180N	Pan Head Screw:M4x18	13 - 102
0353 0060N	Bind Screw - M3x6	21 - 103
0353 0100N	Screw-M3x10	13 - 107
0354 0080N	Screw:M4x8	29 - 103
0354 0080N	Screw:M4x8	27 - 105
0354 0080N	Screw:M4x8	5 - 104
0451 3006N	Tapping Screw - 3x6	9 - 101
0451 3006N	Tapping Screw - 3x6	15 - 101
0451 3006N	Tapping Screw - 3x6	11 - 101
0451 3006N	Tapping Screw - 3x6	17 - 101
0451 3006N	Tapping Screw - 3x6	21 - 101
0451 3006N	Tapping Screw - 3x6	29 - 105
0451 3006N	Tapping Screw - 3x6	25 - 101
0451 3006N	Tapping Screw - 3x6	5 - 101
0451 4008N	Tapping Screw:4x8	19 - 101
0451 4008N	Tapping Screw:4x8	23 - 101
0451 4008N	Tapping Screw:4x8	17 - 102
0451 4008N	Tapping Screw:4x8	27 - 101
0451 4008N	Tapping Screw:4x8	15 - 102
0451 4008N	Tapping Screw:4x8	29 - 101
0451 4008N	Tapping Screw:4x8	13 - 101
0451 4008N	Tapping Screw:4x8	3 - 101
0451 4008N	Tapping Screw:4x8	11 - 102
0451 4008N	Tapping Screw:4x8	7 - 101
0451 4008N	Tapping Screw:4x8	5 - 102
0453 4008N	Binding Self Tapping Screw:4x8	9 - 102
0454 3006N	Tapping Screw:Round Point:3x6	29 - 102
0454 4006Q	Tapping Screw:4x6	27 - 102
0454 4008N	Tapping Screw:Round Point:4x8	3 - 103
0454 4008Q	Tapping Screw - M4x8	7 - 104
0454 4008Q	Tapping Screw - M4x8	25 - 102
0454 4008Q	Tapping Screw - M4x8	5 - 103

Part No.	Description	Page and Index No.
0454 4008Q	Tapping Screw - M4x8	23 - 102
0454 4008Q	Tapping Screw - M4x8	21 - 102
0454 4008Q	Tapping Screw - M4x8	19 - 105
0454 4010Q	Tapping Screw:4x10	23 - 109
0594 0080E	Bolt - M4x8	23 - 103
0594 0080E	Bolt - M4x8	27 - 104
0594 0080E	Bolt - M4x8	21 - 104
0720 0040E	Retaining Ring - M4	13 - 103
0720 0040E	Retaining Ring - M4	11 - 103
0720 0040E	Retaining Ring - M4	19 - 102
0720 0040E	Retaining Ring - M4	15 - 103
0720 0040E	Retaining Ring - M4	17 - 104
0720 0040E	Retaining Ring - M4	9 - 104
0720 0060E	Retaining Ring - M6	17 - 103
0720 0060E	Retaining Ring - M6	7 - 102
0720 0060E	Retaining Ring - M6	11 - 104
0720 0060E	Retaining Ring - M6	15 - 104
0720 0060E	Retaining Ring - M6	23 - 105
0720 0060E	Retaining Ring - M6	9 - 105
0720 0060E	Retaining Ring - M6	19 - 103
0720 0060E	Retaining Ring - M6	13 - 104
0741 3808	Ball Bearing - 8x16x5mm	19 - 104
0741 3808	Ball Bearing - 8x16x5mm	23 - 106
0741 3808	Ball Bearing - 8x16x5mm	13 - 105
0741 3808	Ball Bearing - 8x16x5mm	7 - 103
0951 4020N	Screw:Polished Round:M4x20	3 - 104
0954 3006N	Screw - M3x6	25 - 103
0954 3025N	Screw:Polished Round/Spring:M3x25	27 - 103
0954 4008N	Screw - M4x8	23 - 104
0954 4008N	Screw - M4x8	21 - 105
0954 4008N	Screw - M4x8	25 - 104
0954 5010N	Screw:Polished Round/Spring:M5x10	29 - 104
1102 6246	Relay Connector - 3P	21 - 109

Part No.	Description	Page and Index No.
1102 6246	Relay Connector - 3P	23 - 108
1102 6252	Relay Connector	27 - 109
1102 8502	Connector - 54679-1615	21 - 108
1105 0409	Card Spacer - 6.4mm	23 - 107
1105 0487	Harness Clamp	27 - 106
1105 0487	Harness Clamp	25 - 105
1105 0487	Harness Clamp	21 - 106
1105 0488	Harness Clamp	25 - 106
1105 0488	Harness Clamp	21 - 111
1105 0511	Harness Clamp - LWS-0306ZC	27 - 107
1105 0511	Harness Clamp - LWS-0306ZC	11 - 105
1105 0511	Harness Clamp - LWS-0306ZC	15 - 105
1105 0511	Harness Clamp - LWS-0306ZC	13 - 106
1105 0724	Wing Edge Saddle - WES-1210	21 - 107
1106 0289	Bushing - SR-5N-1	21 - 110
1150 0377	Power Supply Code:250V:10A:EU	3 - 102
1150 0438	Power Supply Code:125V:15A:NA	3 - 102
1204 2612	Micro Switch	27 - 108

Part No.	Description	Page and Index No.
5447 2681	Snap Ring	5 3