MODIFICATION BULLETIN NO. CFO-004 ISSUED ON December 24th, 1992

Old Parts No.	New Parts No.	Description	Q'ty Used Old ® New	Interchange-ability	Remarks	Parts Catalog	
						Index No.	Page
1407 3206		IC - CMOS: TC7532F	(4 - 2)		For H082 6019, 6032, 6020		
1407 3290		IC - TC74 HC02AF	(1 - 0)		For H082 6019, 6032, 6020		
	1407 4167	IC - CMOS: TC7W02F	(0 - 1)		For H082 6019, 6032, 6020		
	1407 4168	IC - CMOS: TC74VHC32FS	(0 - 1)		For H082 6019, 6032, 6020		
	1605 0185	Capacitor - 150PF ± 5%	(0 - 1)		For H082 6019, 6032, 6020		
16050283		Capacitor - 1mF + 80 -20%	(8 - 9)		For H082 6019, 6032, 6020		
16061140		Capacitor - 0.1mF + 80 -20%	(66 - 67)		For H082 6019, 6032, 6020		
	16070524	BLM 32A 06	(0 - 1)		For H082 6019, 6032, 6020		
16303101		Resistor - 100W ±5% 1/10W	(50 - 51)		For H082 6019, 6032, 6020		
14080565	14080969	Comparator - LM311M	(2 - 2)		For H082 6019, 6032		
	16070587	Coil: SBT - 0410	(0 - 1)		For H082 6019		
16070587		Coil: SBT - 0410	(1 - 2)		For H082 6032, 6020		
16330000		Resistor - 0W ±1% 1/10W	(5 - 6)		For H082 6032		

MODIFICATION BULLETIN NO. CFO-005

ISSUED ON December 24th, 1992

Model	CFO All models	Date of Modification
Modified Article	PCB - FCU	Execution Date
Reason for Modification	☐ Parts catalog correction ☐ Vender change ☐ To meet standards ( ) ☐ Part standardization ☐ To facilitate assembly ☐ To improve reliability ■ Other When transmitting with G4 mode, a part of the image might be deleted.	From Oct of '92 productions.

Old Part No.	New Part No.	Description	Q'ty Used Old ® New	Interchange-ability	Remarks	Parts Catalog	
						Index No.	Page
H082 6019E	H082 6040	PCB - FCU - USA	1 - 1	X / O		49	1 - 5
H082 6020E	H082 6041	PCB - FCU - ASIA	1 - 1	X / O		49	1 - 5
H082 6032A	H082 6042	PCB - FCU - EUR	1 - 1	X / O		49	1 - 5
1400 0392		Transistor - DTC 114EK	(2 - 1)		For H082 6040, 6041, 6042		
1407 2948		Invertor: TS7S M4F	(1 - 0)		For H082 6040, 6041, 6042		
1407 3206		IC - CMOS TC7S32F	(2 - 4)		For H082 6040, 6041, 6042		
	1407 3290	IC - CMOS TC74HC02AF	(0 - 1)		For H082 6040, 6041, 6042		
1407 4167		IC - CMOS TC7W02F	(1 - 0)		For H082 6040, 6041, 6042		
1407 4168		IC - CMOS TC74VH C32FS	(1 - 0)		For H082 6040, 6041, 6042		

Reference No. for this MB

QECR	
ECN No.	

H.Motojima

Assistant General Manager

FTS Sect. TS Dept.

MODIFICATION BULLETIN NO. CFO-005 ISSUED ON December 24th, 1992

Old Parts No.	New Parts No.	Description	Q'ty Used Old ® New	Interchange-ability	Remarks	Parts Catalog	
						Index No.	Page
	1601 7654	Resistor - 4.7k W	(0 - 1)		For H081 6040, 6041, 6042		
	1601 7659	Resistor - 4.7k W	(0 - 1)		For H081 6040, 6041, 6042		
1605 0185		Capacitor - 150PF ± 5%	(1 - 0)		For H081 6040, 6041, 6042		
1605 0283		Capacitor - 1mF + 80 -20%	(9 - 8)		For H081 6040, 6041, 6042		
1606 1140		Capacitor - 0.1mF + 80 -20%	(67 - 66)		For H081 6040, 6041, 6042		
1607 0524		BLM 32A06	(1 - 0)		For H081 6040, 6041, 6042		
1630 3101		Resistor - 100W ±5% 1/10W	(51 - 50)		For H081 6040, 6041, 6042		
	1408 0565	Comparator - MPC311G	(0 - 2)		For H081 6040, 6041		
1408 0969		Comparator - LM311M	(2 - 0)		For H081 6040, 6041		
1607 0587		Coil: SBT - 0410	(2 - 1)		For H081 6041, 6042		
1607 0587		Coil: SBT - 0410	(1 - 0)		For H081 6040		
1633 0000		Resistor - 0W ±1% 1/10W	(6 - 5)		For H081 6041		

MODIFICATION BULLETIN NO. CFO-006

ISSUED ON December 24th, 1992

Model	CFO All models	Date of Modification
Modified Article	PCB - FCU	Execution Date
Reason for Modification	☐ Parts catalog correction ☐ Vender change ☐ To meet standards ( ) ☐ Part standardization ■ To facilitate assembly ☐ To improve reliability ☐ Other Change the second sorce for DRAMS. · 1MDRAM(H082 7111) - NEC, Fujitsu. · 4MDRAM(H082 7112) - Toshiba · 4MDRAM(H082 7116) - Hitachi	From Nov. of 92 productions

Old Part No.	New Part No.	Description	Q'ty Used Old ® New	Interchange-ability	Remarks	Parts Catalog	
						Index No.	Page
H082 6040	H082 6040A	PCB - FCU - USA	1 - 1	O / O		49	1 - 5
H082 6042	H082 6042A	PCB - FCU - EUR	1 - 1	O / O		49	1 - 5
H082 6041	H082 6041A	PCB - FCU - ASIA	1 - 1	O / O		49	1 - 5
H082 7111A	H082 7111B	IC - 1MDRAM	(1 - 1)				
H082 7112A	H082 7112B	IC - 4MDRAM	(1 - 1)				
H082 7116A	H082 7116B	IC - 4MDRAM(L version)	(1 - 1)				

Reference No. for this MB

QECR	
ECN No.	

H.Motojima

Assistant General Manager

FTS Sect. TS Dept.

MODIFICATION BULLETIN NO. CFO-007

ISSUED ON December 24th, 1992

Model	CFO Europe only	Date of Modification
Modified Article	PCB - FCU	Execution Date
Reason for Modification	☐ Parts catalog correction ☐ Vender change ☐ To meet standards ( ) ☐ Part standardization ☐ To facilitate assembly ☐ To improve reliability ■ Other To correct a spelling mistake, the wording IC has been changed.	From Mov. of '92 productions.

Old Part No.	New Part No.	Description	Q'ty Used Old ® New	Interchange-ability	Remarks	Parts Catalog	
						Index No.	Page
H082 6042A	H082 6042B	PCB - FCU - EUR	1 - 1	X / O		49	1 - 15
H082 7151	H082 7151A	IC - ROM (IC12)	(1 - 1)				

Reference No. for this MB

QECR	
ECN No.	

H.Motojima

Assistant General Manager

FTS Sect. TS Dept.

MODIFICATION BULLETIN NO. CFO-008

ISSUED ON Janualy 6th, 1993

Model	CFO all models	Date of Modification
Modified Article	PCB - MBU	Execution Date
Reason for Modification	☐ Parts catalog correction ☐ Vender change ☐ To meet standards ( ) ☐ Part standardization ☐ To facilitate assembly ☐ To improve reliability ■ Other The second sorce of EPROM has been changed. Mitsubishi ® ATMEL	After the old parts have become out of stock.

Old Part No.	New Part No.	Description	Q'ty Used Old ® New	Interchange-ability	Remarks	Parts Catalog	
						Index No.	Page
H082 6008B	H082 6008C	PCB - MBU: USA	1 - 1	O / O		48	1 - 5
H082 7136B	H082 7136C	IC - PROM: USA	(1 - 1)				
H082 6027	H082 6027A	PCB - MBU: EUR	1 - 1	O / O		48	1 - 5
H082 7152	H082 7152A	IC - PROM: EUR	(1 - 1)				
H082 6022C	H082 6022D	PCB - MBU: ASIA	1 - 1	O / O		48	1 - 5
H082 7139A	H082 7139B	IC - PROM: ASIA	(1 - 1)				

Reference No. for this MB

QECR	
ECN No.	

H.Motojima

Assistant General Manager

FTS Sect. TS Dept.

MODIFICATION BULLETIN NO. CFO-009

ISSUED ON March 24th, 1993.

Model	CFO All models	Date of Modification
Modified Article	Development Unit	Expected Date
Reason for Modification	☐ Parts catalog correction ☐ Vender change ☐ To meet standards ( ) ☐ Part standardization ☐ To facilitate assembly ☐ To improve reliability ■ Other The development roller and the Joint - development roller have been combined to one part, in order to facilitate servicing.	Execution Date From the Feb. production.

Old Part No.	New Part No.	Description	Q'ty Used Old ® New	Interchange-ability	Remarks	Parts Catalog Index No.	Parts Catalog Page
H081 2410 →	H082 2400	Development Roller Ass'y	1 - 1	O / O		28	7
H081 2474 ┘		Joint - Development Roller	1 - 0			31	7

Reference No. for this MB

QECR	
ECN No.	

H.Motojima

Assistant General Manager

FTS Sect. TS Dept.

MODIFICATION BULLETIN NO. CFO-009 ISSUED ON March 24th, 1993.

DETAILS OF MODIFICATION

The shape of roller shaft and joint holl have be changed as follows.

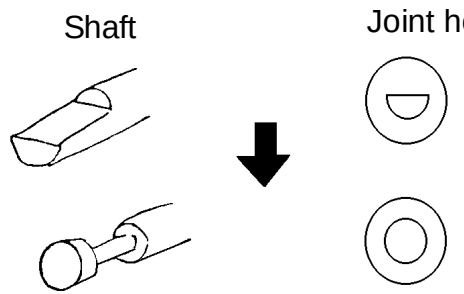

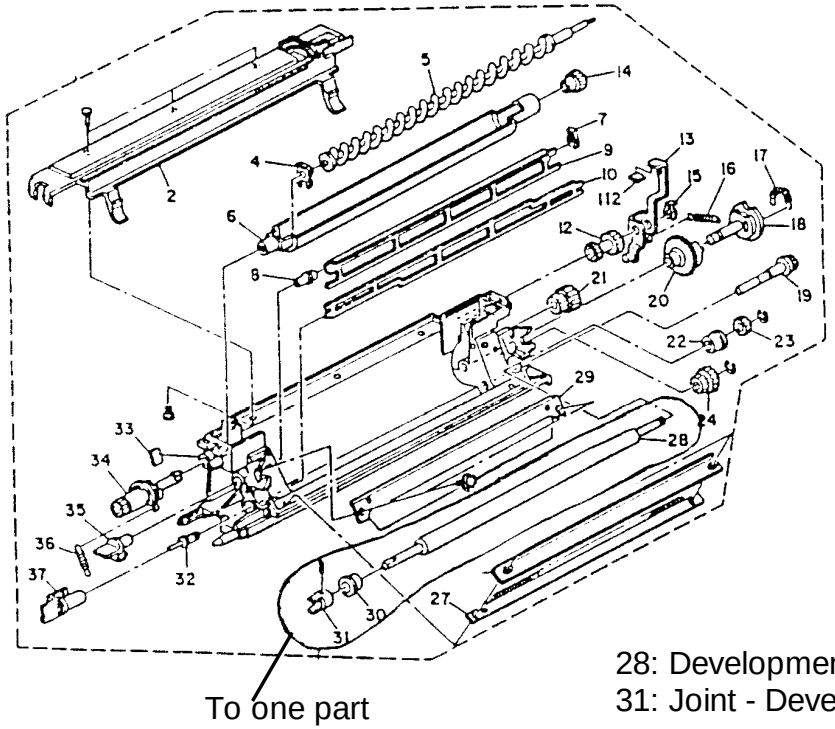

28: Development Roller
31: Joint - Development Roller

MODIFICATION BULLETIN NO. CFO-010

ISSUED ON March 24th, 1993

Model	CFO PFU All models	Date of Modification
Modified Article	Bushing	Expected Date
Reason for Modification	☐ Parts catalog correction ☐ Vender change ☐ To meet standards ( ) ■ Part standardization ☐ To facilitate assembly ☐ To improve reliability ☐ Other	Execution Date After the old parts have become out of stock.

Old Part No.	New Part No.	Description	Q'ty Used Old ® New	Interchange-ability	Remarks	Parts Catalog	
						Index No.	Page
H006 2478	H053 1600	Bushing - Fan Motor	2 - 2	O / O		52	3
5053 0447	H053 1600	Bushing - 6mm	2 - 2	O / O		214	3
H110 3828	H110 3881	Upper Base	1 - 1	O / O		70	3

Reference No. for this MB

QECR	
ECN No.	

H.Motojima

Assistant General Manager

FTS Sect. TS Dept.

MODIFICATION BULLETIN NO. CFO-011

ISSUED ON March 24th, 1993

Model	CFO (USA only)	Date of Modification
Modified Article	PCB - NCU	Expected Date
Reason for Modification	☐ Parts catalog correction ☐ Vender change ☐ To meet standards ( ) ☐ Part standardization ■ To facilitate assembly ☐ To improve reliability ☐ Other	Execution Date After the old parts have become out of stock.

Old Part No.	New Part No.	Description	Q'ty Used Old ® New	Interchange-ability	Remarks	Parts Catalog	
						Index No.	Page
H081 6014B	H081 6014C	PCB - NCU - USA	1 - 1	O / O		9	9
1606 1140		Capacitor - 0.1 mF	(3 - 0)				
1606 1762		Capacitor - 0.022mF	(1 - 0)				
	1633 0000	Chip Resistor - 0W	(1 - 2)				

Reference No. for this MB

QECR	
ECN No.	

H.Motojima

Assistant General Manager

FTS Sect. TS Dept.

MODIFICATION BULLETIN NO. CFO - 012

ISSUED ON March 24th, 1993

Model	CFO All models	Date of Modification
Modified Article	Lower Document Table	Expected Date
Reason for Modification	☐ Parts catalog correction ☐ Vender change ☐ To meet standards ( ) ■ Part standardization ☐ To facilitate assembly ☐ To improve reliability ☐ Other	From Oct. of '92 production Execution Date

Old Part No.	New Part No.	Description	Q'ty Used Old ® New	Interchange-ability	Remarks	Parts Catalog Index No.	Parts Catalog Page
H081 4337		Lower Document Guide (G)	1 ® 0				
	H081 4105	Lower Document Guide	0 ® 1	O / O		26	1 - 3
H081 4401		Lower Document Guide (Tel)	1 ® 0				
	H081 4105	Lower Document Guide	0 ® 1	O / O		26	1 - 3
H081 4298		Lower Document Guide (H)	1 ® 0				
	H081 4105	Lower Document Guide	0 ® 1	O / O		26	1 - 3

Reference No. for this MB

QECR	
ECN No.	92070082

H.Motojima

Assistant General Manager

FTS Sect. TS Dept.

MODIFICATION BULLETIN NO. CFO-013

ISSUED ON March, 26th, 1993

Model	CFO all models	Date of Modification
Modified Article	Paper Exit Cover	Expected Date
Reason for Modification	☐ Parts catalog correction ☐ Vender change ☐ To meet standards ( ) ☐ Part standardization ■ To facilitate assembly ☐ To improve reliability ☐ Other In order to facilitate assembly, the spring plate (H0812157) has been separated from the paper exit cover. (At present, the spring plate is attached to the paper exit cover)	From Oct., of '92 production Execution Date

Old Part No.	New Part No.	Description	Q'ty Used Old ® New	Interchange-ability	Remarks	Parts Catalog Index No.	Page
H081 2156	H0812156	Paper Exit Cover	1 ® 1	O / O		35	1 - 3
	H0812157	Spring Plate	O ® 1			64	1 - 3
H081 4339	H081 4339	Paper Exit Cover (G)	1 ® 1	O / O		35	1 - 3
	H081 2157	Spring Plate	O ® 1			64	1 - 3
H081 4397	H081 4397	Paper Exit Cover (Tel)	1 ® 1	O / O		35	1 - 3
	H-81 2157	Spring Plate	O ® 1			63	1 - 3
H082 4272	H082 4272	Paper Exit Cover (L)	1 ® 1	O / O		35	1 - 3
	H081 2157	Spring Plate	O ® 1			63	1 - 3
H081 4291	H081 4291	Paper Exit Cover (H)	1 ® 1	O / O		35	1 - 3
	H081 2157	Spring Plate	O ® 1			64	1 - 3

Reference No. for this MB

QECR	
ECN No.	92070082

H.Motojima

Assistant General Manager

FTS Sect. TS Dept.

MODIFICATION BULLETIN NO. CFO-013 ISSUED ON March, 26th, 1993

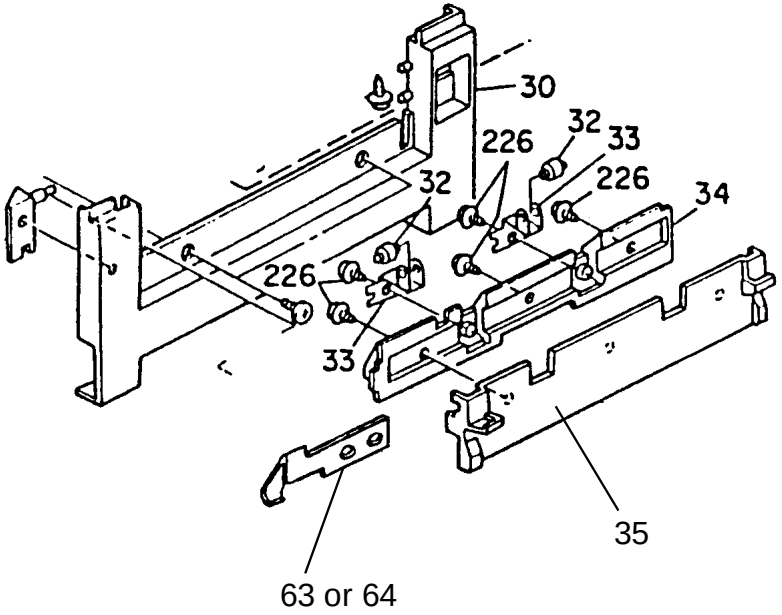

MODIFICATION BULLETIN NO. CFO-014

ISSUED ON March 25th, 1993

Model	CFO All models	Date of Modification
Modified Article	Copy Tray	Expected Date
Reason for Modification	☐ Parts catalog correction ☐ Vender change ☐ To meet standards ( ) ■ Part standardization ☐ To facilitate assembly ☐ To improve reliability ☐ Other The tray has been standardized so that it can be used in common with the Copy Tray of the Japanese market.	After the old parts have become out of stock. Execution Date

Old Part No.	New Part No.	Description	Q'ty Used Old ® New	Interchange-ability	Remarks	Parts Catalog	
						Index No.	Page
H081 4179	H081 4211	Copy Tray ass'y	1 ® 1	O / O		41	1 - 3
H081 4120	H081 4212	Copy Tray	1 ® 1	O / O		39	1 - 3

Reference No. for this MB

QECR	
ECN No.	92070002

H.Motojima

Assistant General Manager

FTS Sect. TS Dept.

MODIFICATION BULLETIN NO. CFO-015

ISSUED ON March 25th, 1993

Model	CFO All models	Date of Modification
Modified Article	Magnet	Expected Date
Reason for Modification	☐ Parts catalog correction ☐ Vender change ☐ To meet standards ( ) ■ Part standardization ☐ To facilitate assembly ☐ To improve reliability ☐ Other 1. Magnet - Cassette cover is no use, therefore it has been deleted. 2. Pressure plate (H081 3372) has been separated to two parts (H081 3402 x 2), in order to standardize the parts with other version.	Execution Date After the old parts have become out of stock

Old Part No.	New Part No.	Description	Q'ty Used Old ® New	Interchange-ability	Remarks	Parts Catalog	
						Index No.	Page
H081 3365		Magnet - Cassette Cover	1 - 0			5	13
H081 3372	H081 3403	Pressure Plate - transfer Roller	1 - 2	O / O		22	13

Reference No. for this MB

QECR	
ECN No.	

H.Motojima

Assistant General Manager

FTS Sect. TS Dept.

MODIFICATION BULLETIN NO. CFO-016

ISSUED ON March 26th, 1993.

Model	CFO (Ricoh Asia version only)	Date of Modification
Modified Article	Copy Tray	Expected Date
Reason for Modification	☐ Parts catalog correction ☐ To meet standards ( ) ☐ To facilitate assembly ☐ Vender change ☐ Part standardization ■ To improve reliability ☐ Other To increase the stuck capacity of the tray, the copy tray and the exit roller have been changed (for B4 size paper). For more details, refer to the attachment.	Execution Date From Feb of '92 productions.

Old Part No.	New Part No.	Description	Q'ty Used Old ® New	Interchange-ability	Remarks	Parts Catalog Index No.	Parts Catalog Page
H081 4211	H082 4302	Copy Tray Ass'y	1 - 1	X / O		41	3
H081 4121	H082 4299	Copy Tray	(1 - 1)	X / O		39	3
H081 4212	H082 4298	Sub Copy Tray	(1 - 1)	X / O		40	3
H081 2129	H081 2127	Lower Exit Guide Plate	1 - 1	X / O		34	3
H081 2156E	H081 2130	Paper Exit Cover	1 - 1	X / O		35	3
H081 2151		Exit Roller Holder	2 - 4			33	3
H081 2167		Lower Exit Roller	2 - 4			32	3
H081 2132F	H081 2132G	Exit Roller	1 - 1	X / O		69	7

Reference No. for this MB

QECR	
ECN No.	

H.Motojima

Assistant General Manager

FTS Sect. TS Dept.

MODIFICATION BULLETIN NO. CFO-016 ISSUED ON March 26th, 1993.

DETAILS OF MODIFICATION

Copy Tray

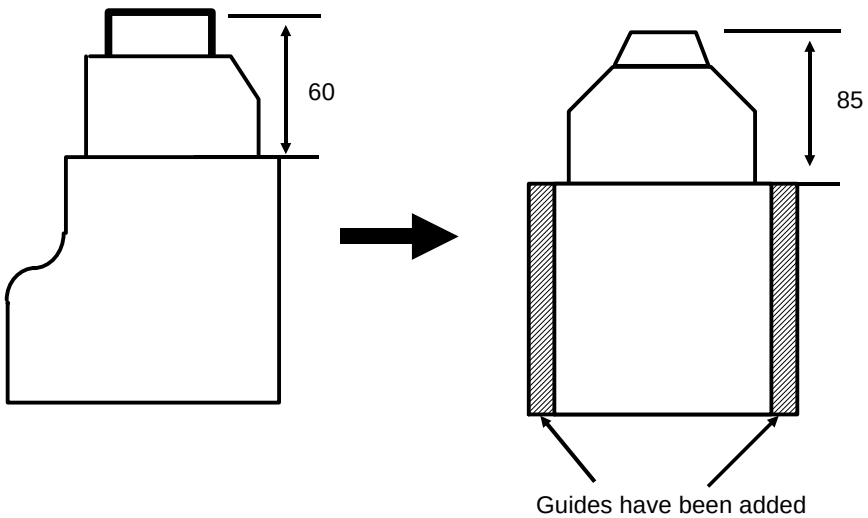

Exit Roller

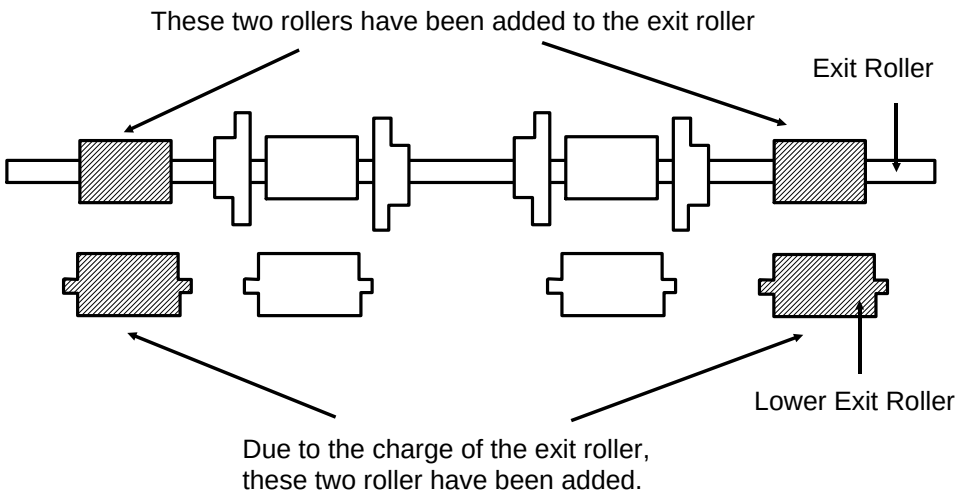

MODIFICATION BULLETIN NO. CFO-017

ISSUED ON March 25th, 1993

Model	CFO All models	Date of Modification
Modified Article	Variouse	Expected Date
Reason for Modification	☐ Parts catalog correction ☐ Vender change ☐ To meet standards ( ) ■ Part standardization ■ To facilitate assembly ☐ To improve reliability ☐ Other 1. Antistatic Brush - Part standardization 2. MDF Bracket - To facilitate assembly, the clamp has been combined with the MDF bracket. 3. Harness clamp/ Guide - To facilitate assembly, the clamp has been changed as shown on the next page. (refer to the attachment)	After the old parts have become out of stock. Execution Date

Old Part No.	New Part No.	Description	Q'ty Used Old ® New	Interchange-ability	Remarks	Parts Catalog Index No.	Parts Catalog Page
H081 1119	H081 1165	Anstistatic Brush - Scanner	1 - 1	O / O		7	5
H081 1126	H081 1155	MDF Bracket	1 - 1	O / O	(with this combination)	16	5
11050344		Clamp	1 - 0			236	5
H081 1089	H110 3883	Harness clamp	1 - 1	O / O	(with this combination)	101	5
H081 1091	H0811092	Harness Guide Ass'y	1 - 1			103	5

Reference No. for this MB

QECR	
ECN No.	

H.Motojima

Assistant General Manager

FTS Sect. TS Dept.

MODIFICATION BULLETIN NO. CFO-017 ISSUED ON March 25th, 1993

DETAILS OF MODIFICATION

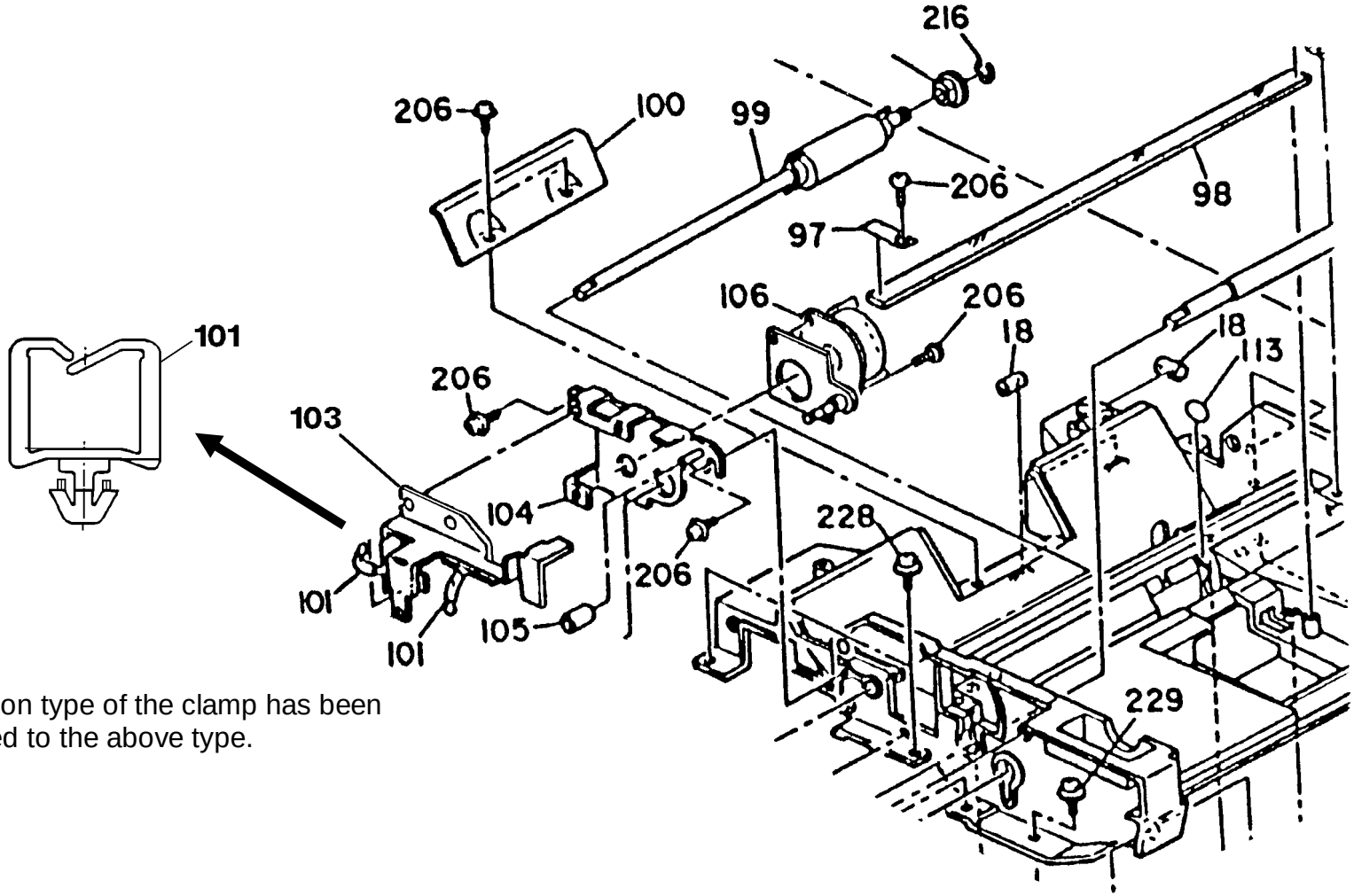

The nylon type of the clamp has been changed to the above type.

MODIFICATION BULLETIN NO. CFO-018

ISSUED ON April, 2nd, 1993.

Model	CFO	Date of Modification
Modified Article	Various	Expected Date
Reason for Modification	☐ Parts catalog correction ☐ Vender change ☐ To meet standards ( ) ☐ Part standardization ■ To facilitate assembly ☐ To improve reliability ☐ Other The following parts have been deleted in order to facilitate assembly, the frame of the machine is strong enough.	From Oct., of '92 production Execution Date

Old Part No.	New Part No.	Description	Q'ty Used Old ® New	Interchange-ability	Remarks	Parts Catalog	
						Index No.	Page
H081 3179	--	Bracket - Right	1 - O	O / O		49	1 - 11
H081 3180	--	Bracket - Stay - Right Side Plate	1 - O	O / O		47	1 - 11

Reference No. for this MB

QECR	
ECN No.	92070089

H.Motojima

Assistant General Manager

FTS Sect. TS Dept.

MODIFICATION BULLETIN NO. CFO-019

ISSUED ON March 25th, 1993

Model	CSO	Date of Modification
Modified Article	Side Plate - Copy Out	Expected Date
Reason for Modification	☐ Parts catalog correction ☐ Vender change ☐ To meet standards ( ) ☐ Part standardization ■ To facilitate assembly ☐ To improve reliability ☐ Other To facilitate assembly, a stepped screw has been used instead of the snap ring. Because of the above change, the copy out side plate has been changed. These parts should be replaced at the same time.	From Oct. of '92 production Execution Date

Old Part No.	New Part No.	Description	Q'ty Used Old ® New	Interchange-ability	Remarks	Parts Catalog Index No.	Parts Catalog Page
H081 2250		Side Plate - Copy Out	1 ® 0			96	1 - 7
5447 2681		Snap Ring	1 ® 0			7	1 - 7
	H081 2293	Side Plate - Copy Out	0 ® 1	O / O		96	1 - 7
	5403 2075	Stepped Screw	0 ® 1			7	1 - 7

Reference No. for this MB

QECR	
ECN No.	92070097

H.Motojima

Assistant General Manager

FTS Sect. TS Dept.

MODIFICATION BULLETIN NO. CFO-019 ISSUED ON March 25th, 1993

DETAILS OF MODIFICATION

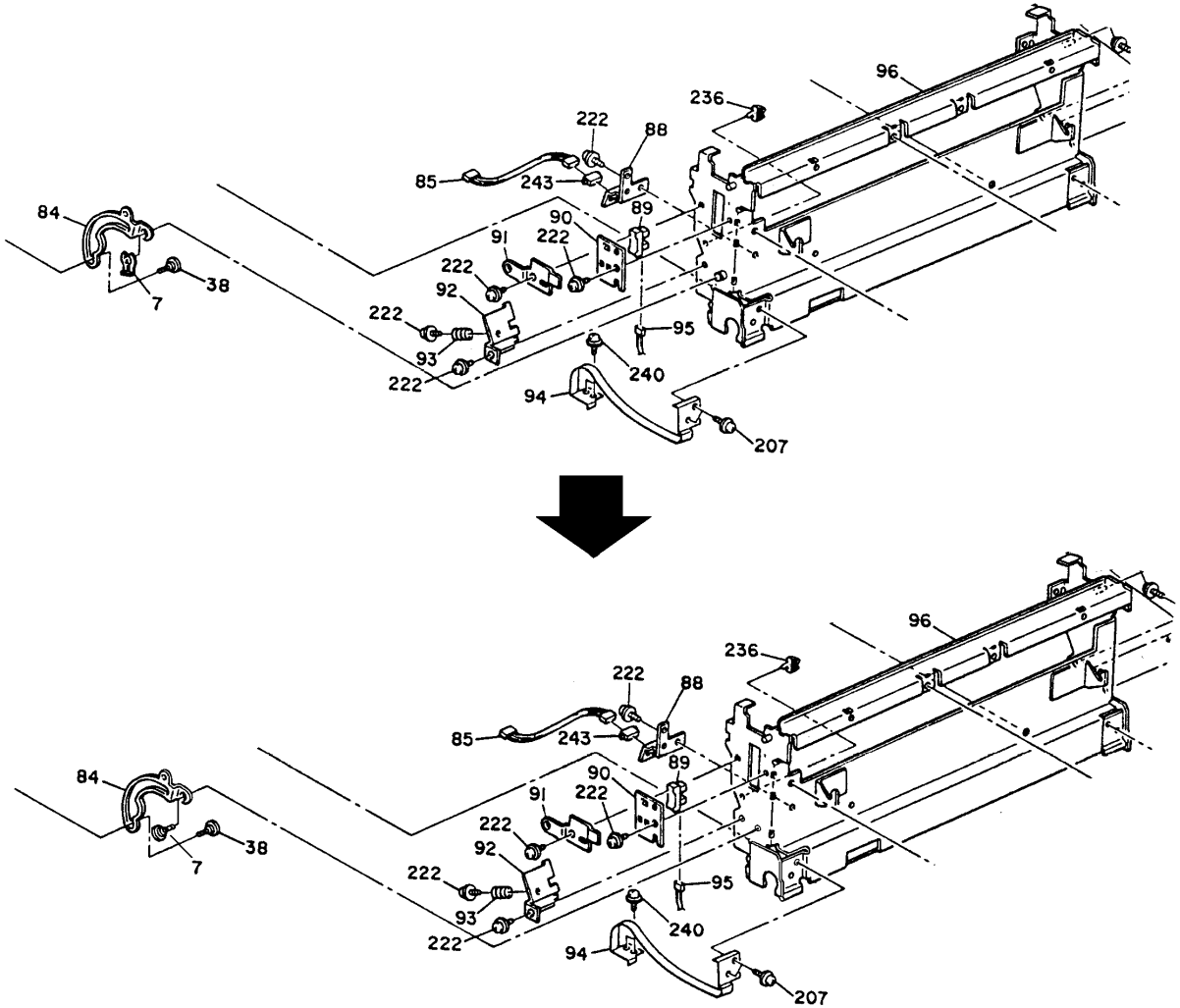

MODIFICATION BULLETIN NO. CFO-020

ISSUED ON April 2nd, 1993

Model	CFO	Date of Modification
Modified Article	Bias Terminal	Expected Date
Reason for Modification	☐ Parts catalog correction ☐ Vender change ☐ To meet standards ( ) ☐ Part standardization ■ To facilitate assembly ☐ To improve reliability ☐ Other H0813260, H0813261, H0813174 and H0813172 should be replaced at the same time with H0813266 and H0813267.	From Jan of '93 production Execution Date

Old Part No.	New Part No.	Description	Q'ty Used Old ® New	Interchange-ability	Remarks	Parts Catalog Index No.	Parts Catalog Page
H081 3260		Development Bias Bushing	1 ® O			48	1 - 9
H081 3261		Development Bias Terminal	1 ® O			49	1 - 9
H081 3174		Left Cover - Bias Terminal	1 ® O	O / O		53	1 - 9
H081 3172		Bias Terminal	1 ® O			50	1 - 9
	H0813266	Development Bias Bushing	O ® 1			48	1 - 9
	H0813267	Development Bias Terminal	O ® 1			49	1 - 9

Reference No. for this MB

QECR	
ECN No.	92070090

H.Motojima

Assistant General Manager

FTS Sect. TS Dept.

MODIFICATION BULLETIN NO. CFO-020 ISSUED ON April 2nd, 1993

DETAILS OF MODIFICATION

Old

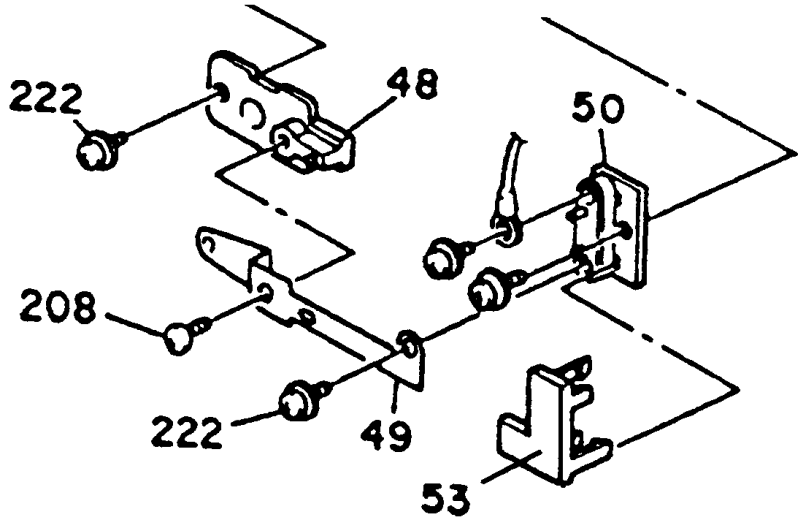

New

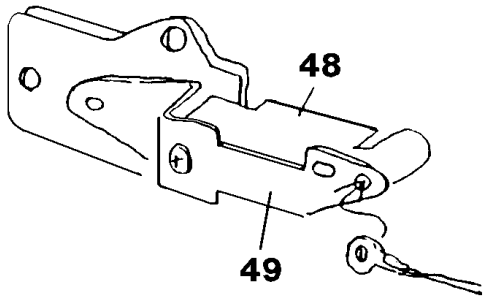

48: H0813260 Development Bias Bushing
49: H0813261 Development Bias Terminal
50: H0813171 Bias Terminal
53: H0813174 Left Cover - Bias Terminal

48: H0813266 Development Bias Bushing
49: H0813267 Development Bias Terminal

MODIFICATION BULLETIN NO. CFO-021

ISSUED ON April 2nd, 1993.

Model	CFO	Date of Modification
Modified Article	Drive Shaft Ass'y	Expected Date
Reason for Modification	☐ Parts catalog correction ☐ Vender change ☐ To meet standards ( ) ☐ Part standardization ■ To facilitate assembly ☐ To improve reliability ☐ Other	From Jan of '93 production
		Execution Date

The shape of Drine Shaft Ass'y (H0813268) and Bushing (H0813291) are same as the old parts.
The shape of Tining Pulley is defferent from the old parts as follows.

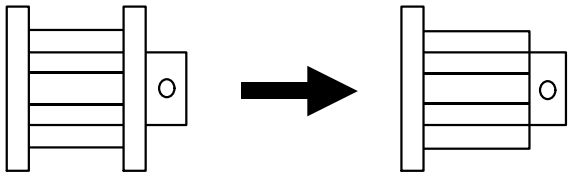

H0813233 H0813270

Old Part No.	New Part No.	Description	Q'ty Used Old ® New	Interchange-ability	Remarks	Parts Catalog Index No.	Parts Catalog Page
H0813243	H0813268	Drive Shaft Ass'y	1 ® 1	O / O		29	1 - 9
H0813233	H0813270	Timing Pulley - PCU - P36	1 ® 1	O / O		36	1 - 9
H0121181	H0813291	Bushing - 6mm	1 ® 1	O / O		22	1 - 9

Reference No. for this MB

QECR	
ECN No.	92070090

H.Motojima

Assistant General Manager

FTS Sect. TS Dept.

MODIFICATION BULLETIN NO. CFO-022

ISSUED ON April 2nd, 1993

Model	CFO	Date of Modification
Modified Article	Joint Arm	Expected Date
Reason for Modification	☐ Parts catalog correction ☐ Vender change ☐ To meet standards ( ) ■ Part standardization ☐ To facilitate assembly ☐ To improve reliability ☐ Other	From Jan. of '93 production. Execution Date

Old Part No.	New Part No.	Description	Q'ty Used Old ® New	Interchange-ability	Remarks	Parts Catalog	
						Index No.	Page
H0813287	H0813235	Joint Arm - Master Unit	1 ® 1	O / O		67	1 - 9

Reference No. for this MB

QECR	
ECN No.	92070090

H.Motojima

Assistant General Manager

FTS Sect. TS Dept.

MODIFICATION BULLETIN NO. CFO-023

ISSUED ON March, 26th, 1993

Model	CFO (Lanier)	Date of Modification
Modified Article	Paper Exit Cover	Expected Date
Reason for Modification	■ Parts catalog correction ☐ Vender change ☐ To meet standards ( ) ☐ Part standardization ☐ To facilitate assembly ☐ To improve reliability ☐ Other	From first mass production Execution Date

Old Part No.	New Part No.	Description	Q'ty Used Old ® New	Interchange-ability	Remarks	Parts Catalog Index No.	Parts Catalog Page
H082 4272 →	H082 4272	Paper Exit Cover (L)	1 ® 1	O / O		35	1 - 3
	H081 2157	Spring Plate	O ® 1			63	1 - 3

Reference No. for this MB

QECR	
ECN No.	92070082

H.Motojima

Assistant General Manager

FTS Sect. TS Dept.

MODIFICATION BULLETIN NO. CFO-023 ISSUED ON March, 26th, 1993

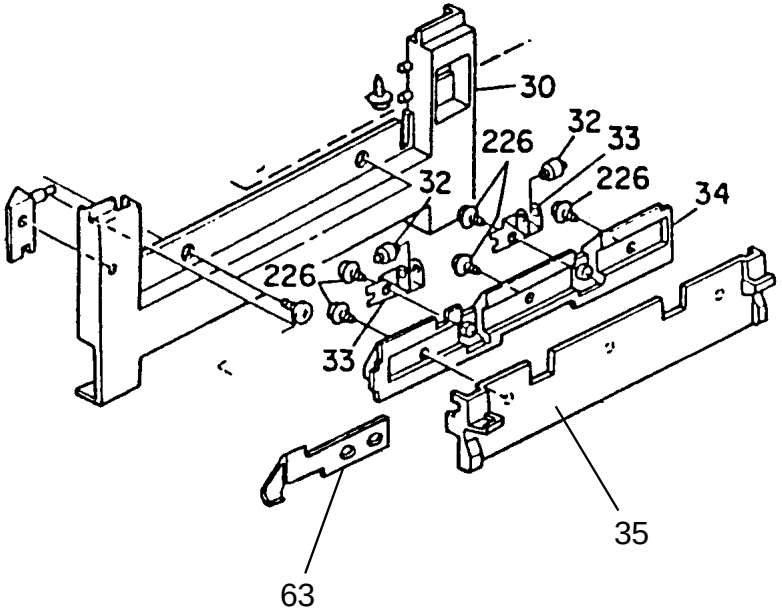

MODIFICATION BULLETIN NO. CFO-023

ISSUED ON June 22nd, 1993

Model	CFO	Date of Modification
Modified Article	PCB-MBU	Expected Date
Reason for Modification	☐ Parts catalog correction ☐ Vender change ☐ To meet standards ( ) ☐ Part standardization ☐ To facilitate assembly ■ To improve reliability ☐ Other Please see attachment.	Execution Date From the November 1992 production

Old Part No.	New Part No.	Description	Q'ty Used Old ® New	Interchange-ability	Remarks	Parts Catalog Index No.	Parts Catalog Page
H0826008C	H0826008D	PCB-MBU-USA	1-1	X/ O		48	1-5
H0827136C	H0827136D	IC-PROM: USA	(1-1)				
H0826027A	H0826027B	PCB-MBU-EUR	1-1	X/ O		48	1-5
H0827152A	H0827152B	IC-ROM: EUR	(1-1)				
H0826022D	H0826022E	PCB-MBU-ASIA	1-1	X/ O		48	1-5
H0827139B	H0827139C	IC-PROM: ASIA	(1-1)				

H.Motojima

Assistant General Manager

FTS Sect. TS Dept.

MODIFICATION BULLETIN NO. CFO-023 ISSUED ON June 22nd, 1993

REASON OF MODIFICATION

1. Correction of the User Parameter List
2. Addition of the international prefix "0068" for G4 for Hong Kong
3. Correction of wordings in English, French, Italian, and Swedish
4. Incorrect position of wording in the LCD, when "Set B4 paper" is displayed.
5. If bit switch 1E no. 0 is changed, an operator call occurs during RDS communication.
6. The following initial settings of user parameter will be changed.

Switch 01 no.1 Center Mark on ® off
Switch 04 no.7 Ordering Toner on ® off
Switch 05 no.3 Condition of memory reception 1 ® 0

7. Deletion of Scan and Print counters from the TCR
8. Settings of auto dialing parameters and NCU parameters will be changed, because of Austria PTT requirements (Europe version only)

MODIFICATION BULLETIN NO. CFO-024

ISSUED ON March 25th, 1993

Model	CFO (Lanier)	Date of Modification
Modified Article	Magnet	Expected Date
Reason for Modification	■ Parts catalog correction ☐ Vender change ☐ To meet standards ( ) ☐ Part standardization ☐ To facilitate assembly ☐ To improve reliability ☐ Other	From first mass production Execution Date

Old Part No.	New Part No.	Description	Q'ty Used Old ® New	Interchange-ability	Remarks	Parts Catalog	
						Index No.	Page
H081 3365		Magnet - Cassette Cover	1 - 0			5	13
H081 3372	H081 3403	Pressure Plate - transfer Roller	1 - 2	O / O		22	13

Reference No. for this MB

QECR	
ECN No.	

H.Motojima

Assistant General Manager

FTS Sect. TS Dept.

MODIFICATION BULLETIN NO. CFO-025

ISSUED ON March, 29th, 1993

Model	CFO	Date of Modification
Modified Article	Tension Roller	Expected Date
Reason for Modification	☐ Parts catalog correction ☐ Vender change ☐ To meet standards ( ) ☐ Part standardization ☐ To facilitate assembly ☐ To improve reliability ■ Other We will combine the Tension Roller and the Tension Roller Bracket in order to facilitate servicing.	From Jan. of '93 production Execution Date

Old Part No.	New Part No.	Description	Q'ty Used Old ® New	Interchange-ability	Remarks	Parts Catalog Index No.	Parts Catalog Page
H081 3487		Bracket - Tension Roller	1 ® O			51	1 - 9
H081 3489		Tension Roller	1 ® O			52	1 - 9
	H081 3323	Tension Roller Ass'y	O ® 1	O / O		51	1 - 9

Reference No. for this MB

QECR	
ECN No.	92080031

H.Motojima

Assistant General Manager

FTS Sect. TS Dept.

MODIFICATION BULLETIN NO. CFO-025 ISSUED ON March, 29th, 1993

DETAILS OF MODIFICATION

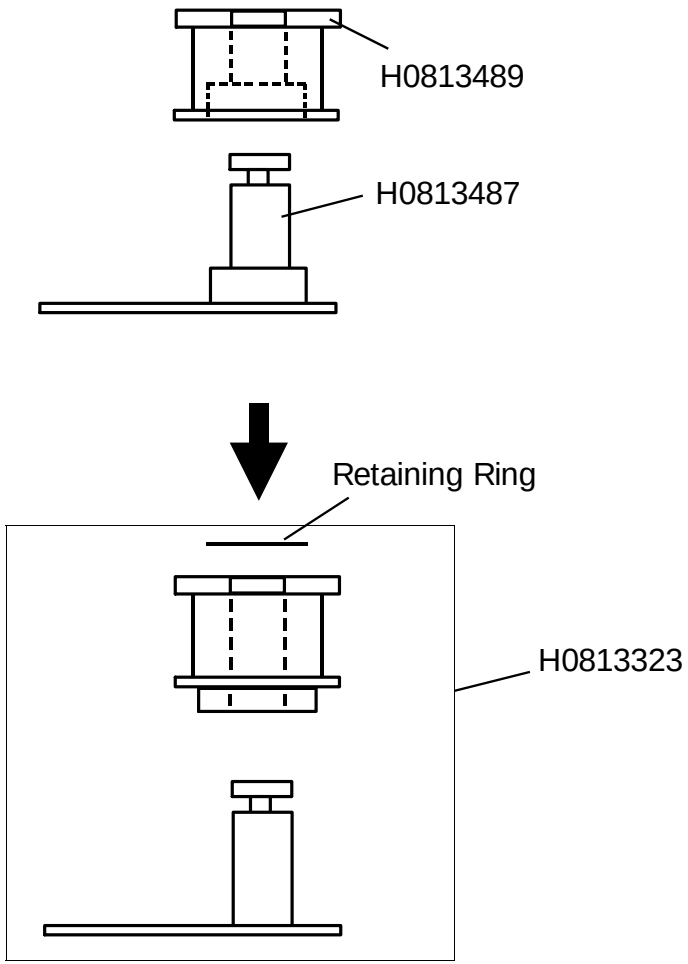

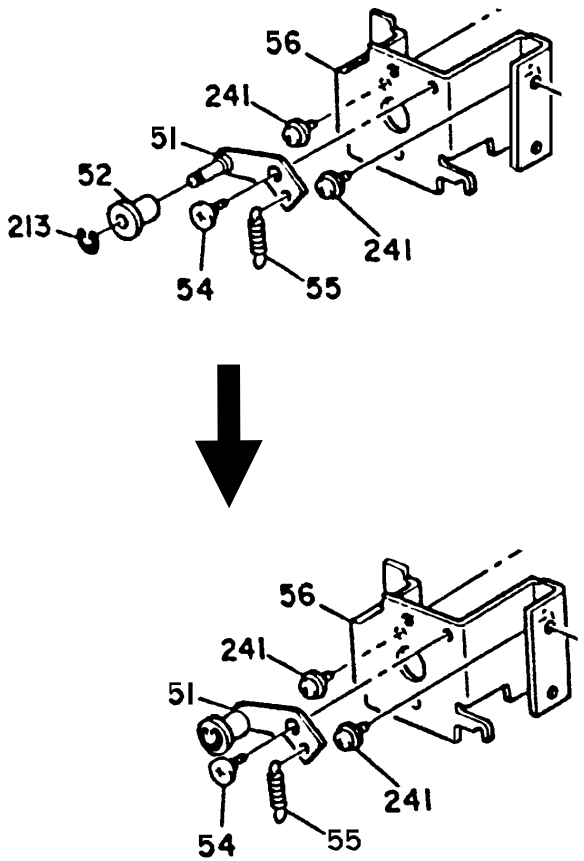

MODIFICATION BULLETIN NO. CFO-026

ISSUED ON April, 8th, 1993

Model	CFO	Date of Modification
Modified Article	Paper Feed Motor	Expected Date
Reason for Modification	☐ Parts catalog correction ☐ Vender change ☐ To meet standards ( ) ■ Part standardization ☐ To facilitate assembly ☐ To improve reliability ☐ Other These parts should be replaced at the same time.	From Jan. of '93 production Execution Date

Old Part No.	New Part No.	Description	Q'ty Used Old ® New	Interchange-ability	Remarks	Parts Catalog Index No.	Parts Catalog Page
H081 3304	H081 3311	Bracket - Paper Feed Motor A'ssy	1 ® 1	O / O		56	1 - 9
H081 5013	H081 5017	Paper Feed Motor	1 ® 1			59	1 - 9

Reference No. for this MB

QECR	
ECN No.	92080031

H.Motojima

Assistant General Manager

FTS Sect. TS Dept.

MODIFICATION BULLETIN NO. CFO-026 ISSUED ON April, 8th, 1993

DETAILS OF MODIFICATION

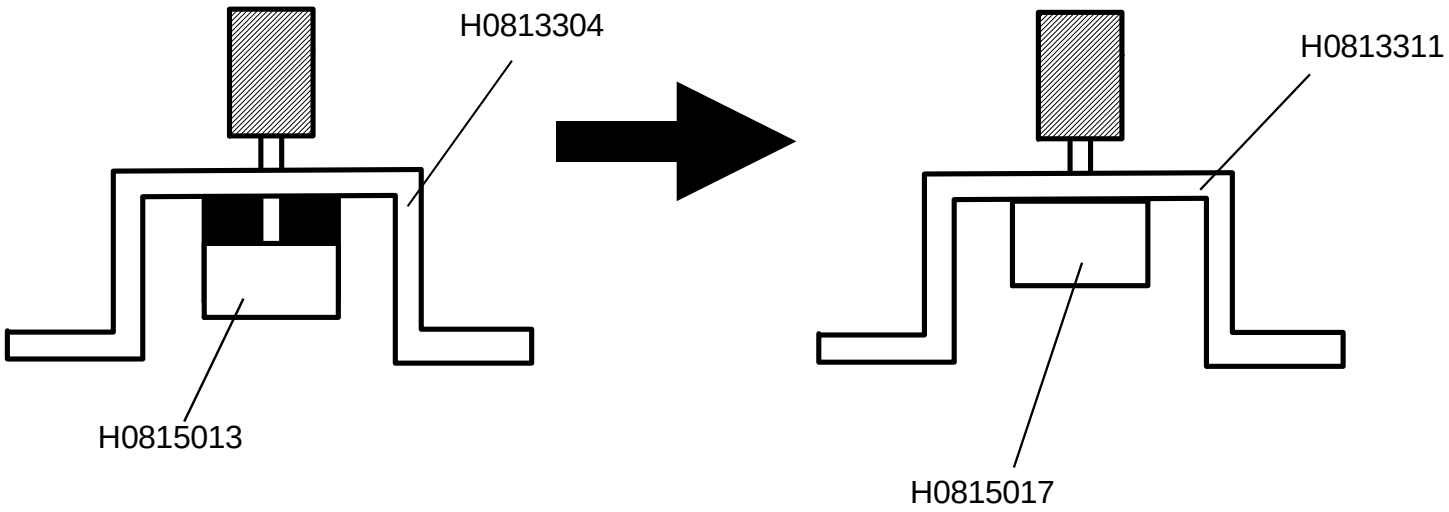

MODIFICATION BULLETIN NO. CFO-027

ISSUED ON March, 29th, 1993

Model	CFO	Date of Modification
Modified Article	FCU Holder	Expected Date
Reason for Modification	☐ Parts catalog correction ☐ To meet standards ( ) ☐ To facilitate assembly ☐ Vender change ☐ Part standardization ☐ To improve reliability ☐ Other We will change the right FCU Holder, in order to facilitate servicing. The same FCU Holder as the left FCU holder will be used for right FCU Holder.	From Jan. of '93 production Execution Date

Old Part No.	New Part No.	Description	Q'ty Used Old ® New	Interchange-ability	Remarks	Parts Catalog	
						Index No.	Page
	H082 3413	Left FCU Holder	1 ® 2			3, 4	1 - 11
H082 3414		Right FCU Holder	1 ® 0			4	1 - 11

Reference No. for this MB

QECR	
ECN No.	82080031

H.Motojima

Assistant General Manager

FTS Sect. TS Dept.

MODIFICATION BULLETIN NO. CFO-028

ISSUED ON April 9th, 1993

Model	CFO	Date of Modification
Modified Article	Fulcurum Bracket	Expected Date
Reason for Modification	☐ Parts catalog correction ☐ Vender change ☐ To meet standards ( ) ■ Part standardization ☐ To facilitate assembly ☐ To improve reliability ☐ Other H082 1083/ H081 1080: Refer to attachment H081 1150/ 1152: To standardize the parts with other versions.	From Feb. productions Execution Date

Old Part No.	New Part No.	Description	Q'ty Used Old ® New	Interchange-ability	Remarks	Parts Catalog	
						Index No.	Page
H082 1083	H082 1203	Right Fulcrum Bracket Ass'y	1 - 1	O / O		109	5
H081 1080	H081 1204	Left Fulcrum Bracket Ass'y	1 - 1	O / O		136	5
H081 1150	H081 1201	Right Fulcrum Bracket - ADF Ass'y	1 - 1	O / O		17	5
H081 1152	H081 1200	Left Fulcrum Bracket - ADF Ass'y	1 - 1	O / O		25	5

Reference No. for this MB

QECR	
ECN No.	92080039

H.Motojima

Assistant General Manager

FTS Sect. TS Dept.

MODIFICATION BULLETIN NO. CFO-028 ISSUED ON April 9th, 1993

DETAILS OF MODIFICATION

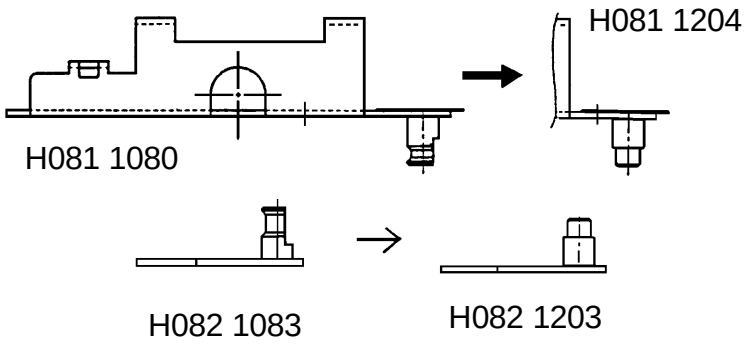

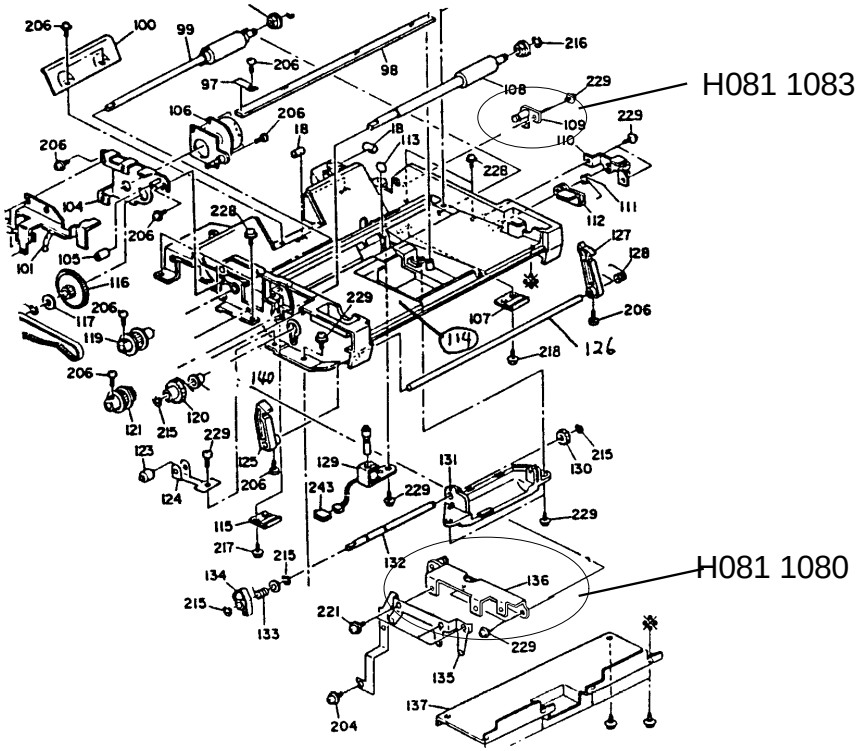

MODIFICATION BULLETIN NO. CFO-029

ISSUED ON April 8, 1993

Model	CFO All models	Date of Modification
Modified Article	Lower Document Guide	Expected Date
Reason for Modification	☐ Parts catalog correction ☐ Vender change ☐ To meet standards ( ) ■ Part standardization ■ To facilitate assembly ☐ To improve reliability ☐ Other We have deleted the maintenance decals, and instead, on the lower document guide, we have added cut down marks. Also, the dust shield sheet has been combined with the document guide.	From Feb. productions. Execution Date

Old Part No.	New Part No.	Description	Q'ty Used Old ® New	Interchange-ability	Remarks	Parts Catalog Index No.	Parts Catalog Page
H081 1021E	H081 1021F	Lower document Guide	O - 1	O / O	(with this combination)	114	5
H081 1158		Maintenance Decal - 2	(1 - O)			82	5
H081 1159		Maintenance Decal - 3	(1 - O)			113	5
H081 1090		Dust Shield sheet - Document Feed	(1 - O)			137	5

Reference No. for this MB

QECR	
ECN No.	92080039

H.Motojima

Assistant General Manager

FTS Sect. TS Dept.

MODIFICATION BULLETIN NO. CFO-029 ISSUED ON April 8, 1993

DETAILS OF MODIFICATION

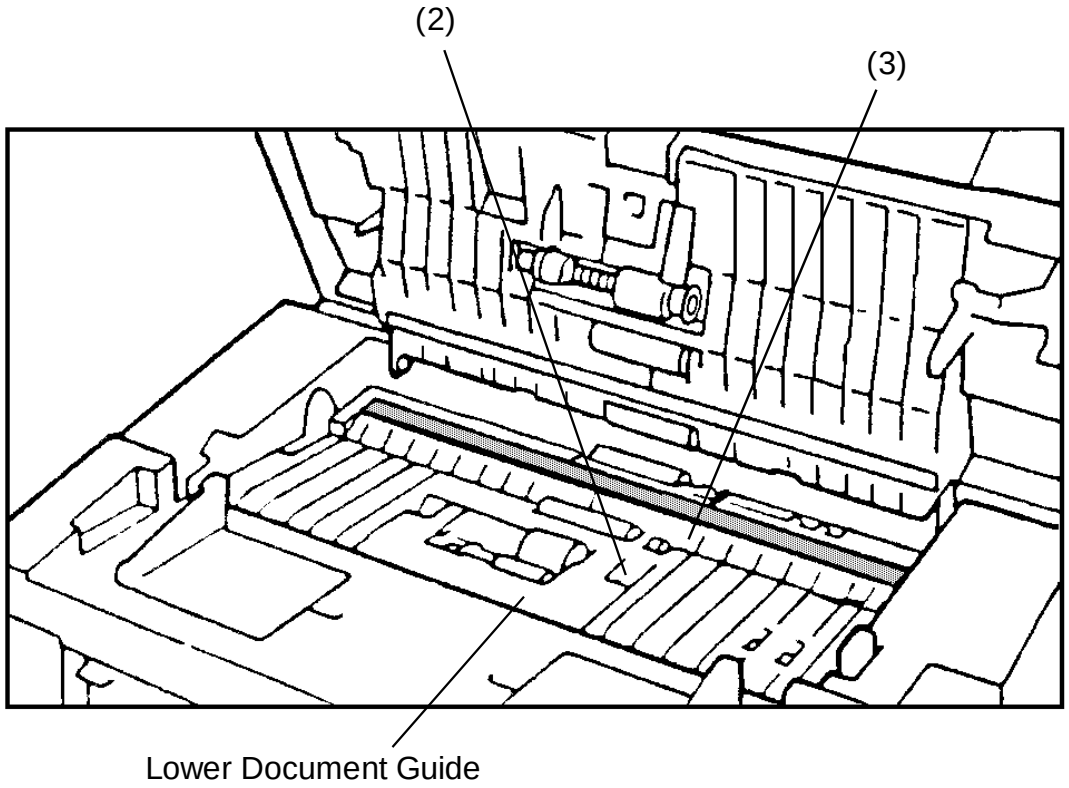

MODIFICATION BULLETIN NO. CFO-030

ISSUED ON April 9th, 1993

Model	CFO all models	Date of Modification
Modified Article	ADF	Expected Date
Reason for Modification	☐ Parts catalog correction ☐ Vender change ☐ To meet standards ( ) ☐ Part standardization ☐ To facilitate assembly ☐ To improve reliability ■ Other · We have deleted the hop up mechanism for op-port, in order to make user operation (to open or close the op-port) easier. Instead, the bracket cover have been added (to meet safty standard) · Also, due to deleting the lift lever bracket, the spring hook has been changed.	From Feb. productions. Execution Date

Old Part No.	New Part No.	Description	Q'ty Used Old ® New	Interchange-ability	Remarks	Parts Catalog Index No.	Parts Catalog Page
H081 1086		Lift Lever - ADF	1 - 0			112	5
H081 1087		Lift Lever Spring	1 - 0			111	5
H081 1088		Lift Lever Bracket	1 - 0			110	5
	H081 1173	Bracket Cover	0 - 1			110	5
H081 1073	H081 1175	Spring Hook	1 - 1	X / O		128	5

Reference No. for this MB

QECR	
ECN No.	92080039

H.Motojima

Assistant General Manager

FTS Sect. TS Dept.

MODIFICATION BULLETIN NO. CFO-030 ISSUED ON April 9th, 1993

DETAILS OF MODIFICATION

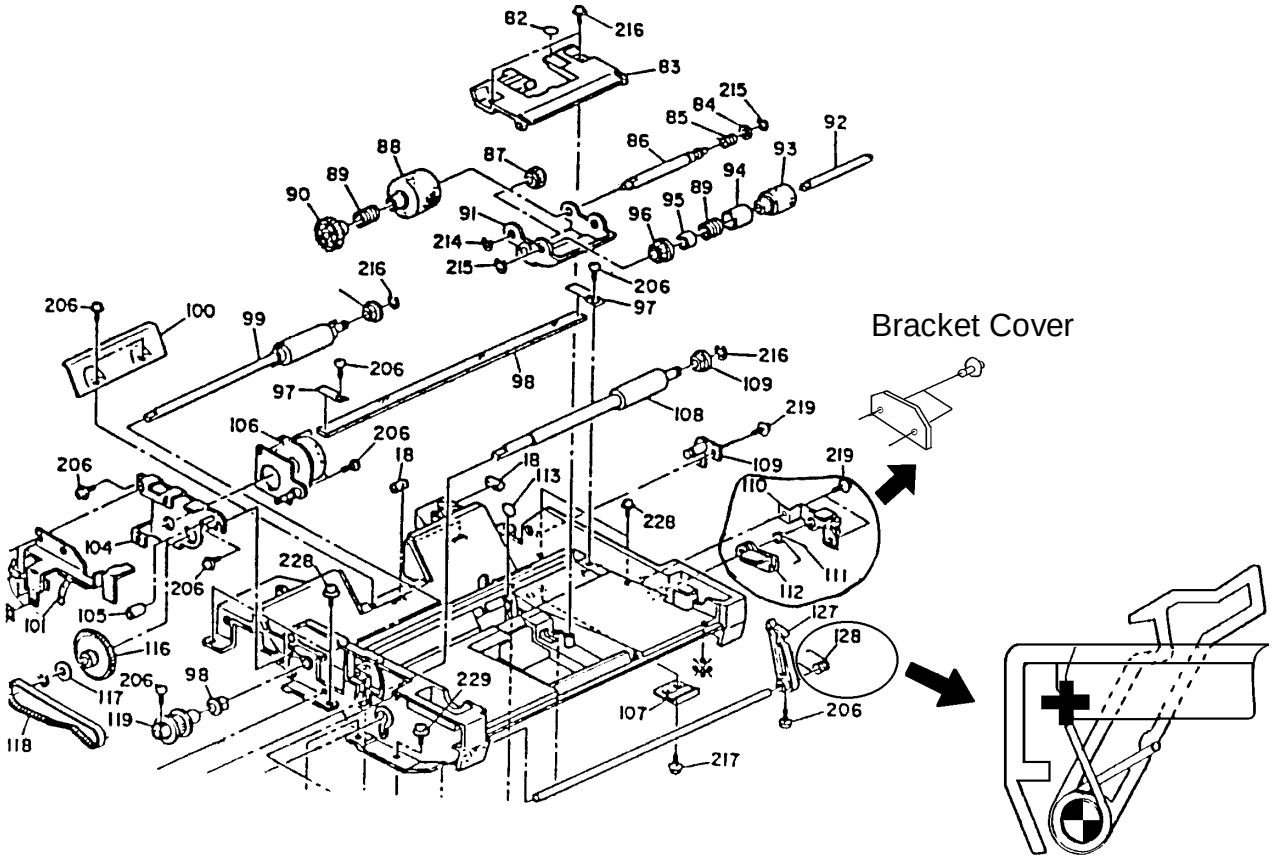

MODIFICATION BULLETIN NO. CFO-031

ISSUED ON April 9th, 1993

Model	CSO All models	Date of Modification
Modified Article	S1 Bracket	Expected Date
Reason for Modification	☐ Parts catalog correction ☐ Vender change ☐ To meet standards ( ) ■ Part standardization ☐ To facilitate assembly ☐ To improve reliability ☐ Other 1. The S1 bracket and the bracket - Separation torque adjuster have been combined. 2. The clamp on the ADF stay ass'y from metal to plastic.	From Feb. productions Execution Date

Old Part No.	New Part No.	Description	Q'ty Used Old ® New	Interchange-ability	Remarks	Parts Catalog Index No.	Parts Catalog Page
H081 1136	H081 1156	S1 Bracket	1 - 1	O / O	(with this combination)	20	5
H081 1132		Bracket - Separation Torque Adjuster	1 - 0			41	5
H082 1141	H082 1202	ADF Stay	1 - 1	O / O	(with this combination)	11	5
	H110 3883	Clamp	0 - 1			101	5

Reference No. for this MB

QECR	
ECN No.	92080039

H.Motojima

Assistant General Manager

FTS Sect. TS Dept.

MODIFICATION BULLETIN NO. CFO-031 ISSUED ON April 9th, 1993

DETAILS OF MODIFICATION

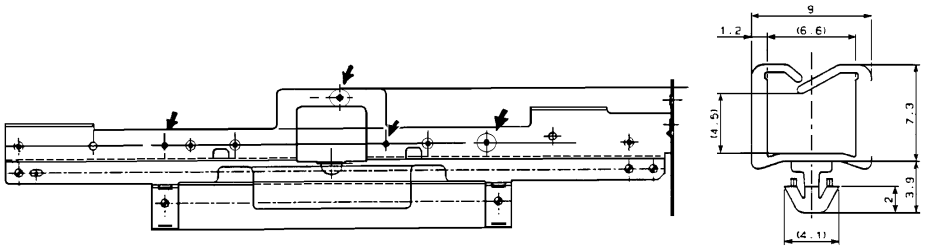

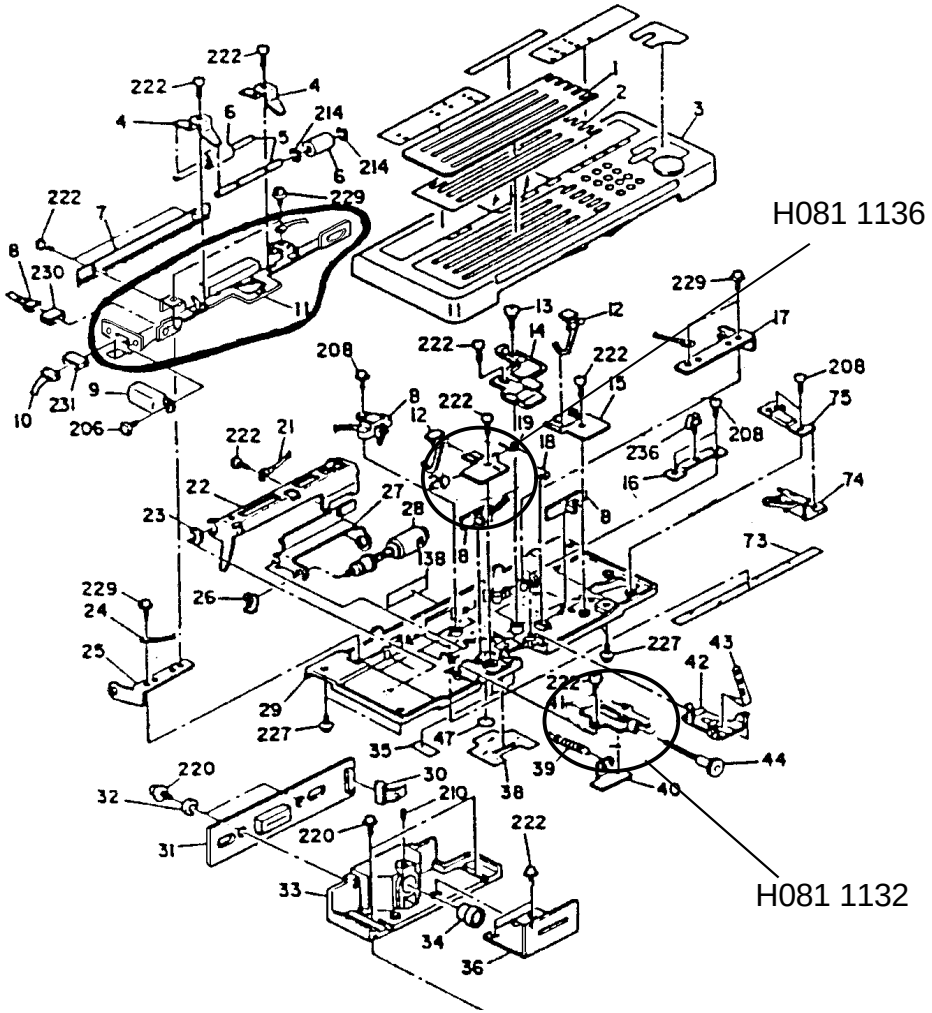

MODIFICATION BULLETIN NO. CFO-032

ISSUED ON June 22nd, 1993

Model	CFO	Date of Modification
Modified Article	PCB-MBU	Expected Date
Reason for Modification	☐ Parts catalog correction ☐ Vender change ☐ To meet standards ( ) ☐ Part standardization ☐ To facilitate assembly ■ To improve reliability ☐ Other Please see attachment.	Execution Date From April production

Old Part No.	New Part No.	Description	Q'ty Used Old ® New	Interchange-ability	Remarks	Parts Catalog Index No.	Parts Catalog Page
H0826008D	H0826008E	PCB-MBU-USA	1-1	X/ O		48	1-5
H0827136D	H0827136E	IC-PROM: USA	(1-1)				
H0826042C	H0826042D	PCB-FCU-EUR	1-1	X/ O		48	1-5
H0827151A	H0827151B	IC-PROM: USA (FCU)	(1-1)				
H0826027B	H0826027C	PCB-MBU-EUR	1-1	X/ O		48	1-5
H0827152B	H0827152C	IC-ROM: EUR	(1-1)				
H0826022E	H0826022F	PCB-MBU-ASIA	1-1	X/ O		48	1-5
H0827139C	H0827139D	IC-PROM: ASIA	(1-1)				

Reference No. for this MB

QECR	
ECN No.	

H.Motojima

Assistant General Manager

FTS Sect. TS Dept.

MODIFICATION BULLETIN NO. CFO-032 ISSUED ON June 22nd, 1993

REASON OF MODIFICATION

1. The interval for fallback from G4 to G3 has been changed from 5 minutes to 2 seconds.

2. On the reports, both the transmitted page no. and the total page no. can be printed.

3. Codec gain for ISDN G3 has been changed from -0.5 db to -4.5db, to prevent communication failures.

4. While rewriting the RTI/ TTI/ CSI from RDS, the previous characters can be erased.

5. To prevent the following problems:

   (1) Due to the shortage of fill bits, a communication failure might occur (with non ECM, I/O rate= 40 ms).
   (2) During G4 transmission (non memory), the stamper might mark on NG pages.

6. Spelling mistake

   Italian: 'DEC' ® 'DIC' (December)
   'JUI' ® 'JUL' (July)

7. UK PTT requirements

Monitor speaker during Test mode ® ON
Redial interval (Non memory Tx) ® 3 minutes
Busy tone detection tolerance ® 25%

MODIFICATION BULLETIN NO. CFO-033

ISSUED ON June 30, 1993

Model	CFO All models	Date of Modification
Modified Article	Ground Wire	Expected Date
Reason for Modification	☐ Parts catalog correction ☐ Vender change ■ To meet standards (UL) ☐ Part standardization ☐ To facilitate assembly ☐ To improve reliability ☐ Other	From May productions Execution Date

Old Part No.	New Part No.	Description	Q'ty Used Old → New	Interchange-ability	Remarks	Parts Catalog Index No.	Parts Catalog Page
H0825112		Ground Wire - PSU	1 - 0	X / O	(as this combination)	73	11
	H0825121	Ground Wire - Scanner	0 - 1			73	11
	H0815535	Ground Wire - PSU	0 - 1			73	11

Reference No. for this MB

QECR	
ECN No.	93040133

H.Motojima

Assistant General Manager

FTS Sect. TS Dept.

MODIFICATION BULLETIN NO. CFO-034

ISSUED ON June 30, 1993

Model	CSO All models	Date of Modification
Modified Article	Left side Plate	Expected Date
Reason for Modification	■ Parts catalog correction ☐ Vender change ☐ To meet standards ( ) ☐ Part standardization ☐ To facilitate assembly ☐ To improve reliability ☐ Other We have deleted the left side plate from the service parts master, because, this part is not necessary for your field service activation	Execution Date

Old Part No.	New Part No.	Description	Q'ty Used Old ® New	Interchange-ability	Remarks	Parts Catalog	
						Index No.	Page
H0813200		Left Side Plate	1 - 1			77	9

Reference No. for this MB

QECR	
ECN No.	93040133

H.Motojima

Assistant General Manager

FTS Sect. TS Dept.

MODIFICATION BULLETIN NO. CFO-035

ISSUED ON Jun. 30, 1992

Model	CFO all models	Date of Modification
Modified Article	Sheet	Execution Date
Reason for Modification	☐ Parts catalog correction ☐ Vender change ☐ To meet standards ( ) ☐ Part standardization ☐ To facilitate assembly ■ To improve reliability ☐ Other To protect the mirror from becoming durty.	From May productions

Old Part No.	New Part No.	Description	Q'ty Used Old ® New	Interchange-ability	Remarks	Parts Catalog Index No.	Parts Catalog Page
	H081 1236	CTM Sheet	0 - 1			150	5
	H081 1237	FCU Sheet	0 - 1			151	5
	H081 1238	Dust Protection Sheet	0 - 1			152	5

H.Motojima

Assistant General Manager

FTS Sect. TS Dept.

MODIFICATION BULLETIN NO. CFO-035 ISSUED ON Jun. 30, 1992

DETAILS OF MODIFICATION

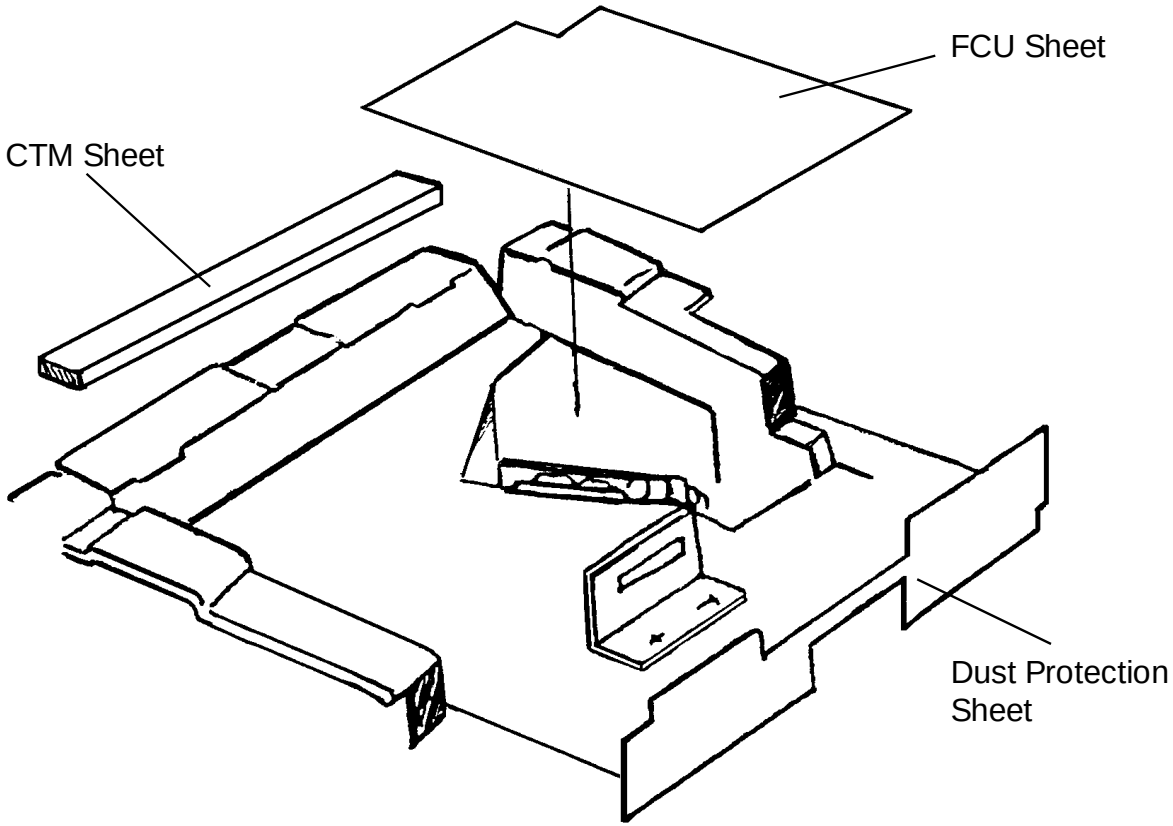

MODIFICATION BULLETIN NO. CFO-036

ISSUED ON October 26, 1993

Model	CFO French version only	Date of Modification
Modified Article	PCBs	Execution Date
Reason for Modification	■ Parts catalog correction ☐ Vender change ☐ To meet standards ( ) ☐ Part standardization ☐ To facilitate assembly ☐ To improve reliability ☐ Other	From 1st mass production

Old Part No.	New Part No.	Description	Q'ty Used Old ® New	Interchange-ability	Remarks	Parts Catalog	
						Index No.	Page
H082 6032	H082 6043	PCB-FCU: France	1 - 1			49	5
H082 6027	H082 6038	PCB-MBU: France	1 - 1			48	5

S.Hamano

Assistant General Manager
Second Technical Support Section
International Marketing Group

MODIFICATION BULLETIN NO. CFO-037

ISSUED ON November 18th, 1993

Model	CFO (Europe only)	Date of Modification
Modified Article	PCB - MBU, FCU	Execution Date
Reason for Modification	☐ Parts catalog correction ☐ Vender change ☐ To meet standards ( ) ☐ Part standardization ☐ To facilitate assembly ☐ To improve reliability ■ Other · To correct French wording (TTI, Label Insertion). · To improve the marker reliability (The marker may not operate if the timing of pressing the marker key is delayed during G4 non memory transmission.) · To make it possible to change the interval between each frame from 6 seconds during ECM reception.	H082-30 4600830001~ H082-40 U2030800001~ H082-90 6153080205~

Old Part No.	New Part No.	Description	Q'ty Used Old ® New	Interchange-ability	Remarks	Parts Catalog	
						Index No.	Page
H082 6027D	H082 6027E	PCB - MBU : E	1 ® 1	X/O		48	1-5
H082 7152D	H082 7152E	Programmed ROM	1 ® 1	X/O			
H082 6042D	H082 6042E	PCB - FCU : E	1 ® 1	X/O		49	1-5
H082 7151B	H082 7151C	Programmed ROM	1 ® 1	X/O			

S.Hamano

Assistant General Manager
Second Technical Support Section
International Marketing Group

RICOH

Modification Bulletin

Model: R73 / 78 / 79, K105, CFO	Date: 31-Mar-98	No: Multi-011
Modified Article: HDD (Option)	Prepared by: Y.Okunishi	
From: QAC Field Information Dept.		
Reason for Modification:	☐ Parts catalog correction ☒ Vendor change ☐ To meet standards ( ) ☐ To facilitate assembly ☐ To improve reliability ☐ Part Standardization ☐ Other	
Modification Schedule	When the stock of the old part runs out.	

Old part number	New part number	Description	Qty	Int	Page	Index	Note
H044 8251	H082 9021	Hard Disk Drive	1 – 1	O/O			*

* The difference between the parts is only the case for the disk.

The new disk H082 9021 does not contain the case. So, please use the case of the old disk unit for the new disk when the HDD is replaced.

Note:

R73 : FAX 105, Savin FAX701, Infotec 6373

R78 : FAX 90, Savin FAX401, Infotec 6363

R79 : FAX 95, Savin FAX501, Infotec 6365

K105 : FAX 4000L, Savin FAX700, Omni fax L45

CFO : FAX 4500L, NRG 9670/71, Omni fax L47, Lanier FAX7500, Infotec 3665

RC	RE	ASIA	
*	*	*	