LASER MFP
SP1100S
Aficio SP1100S

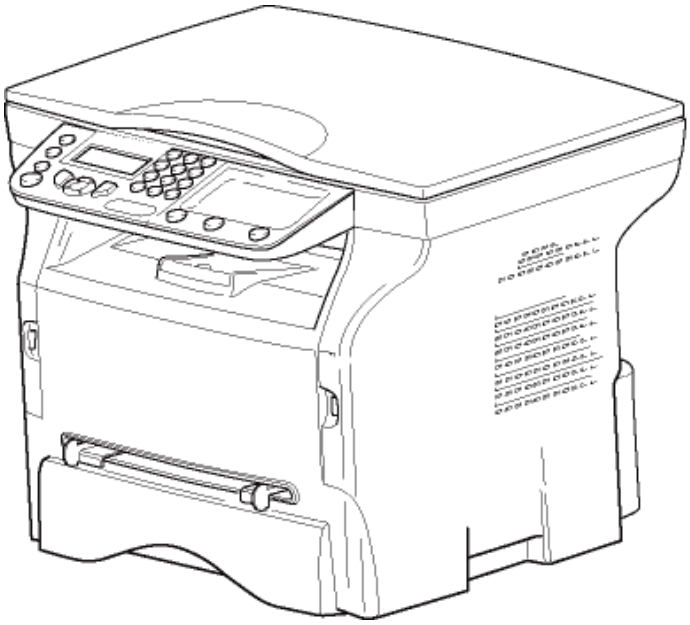

User's Guide

Read this manual carefully before you use this machine and keep it handy for future reference.
For safe and correct use, be sure to read the Safety Information in this manual before using the machine.

Contents

Security 1
- Security directives 1
- Laser safety 1
  - *For Europe/Asia* 1
  - *For North America* 1

Certification 2
- Declaration of conformity 2
  - *Notice to Users in EU Countries* 2
  - *Notice to Users Accessing Analog PSTN in EU Countries* 2
- Symbols for the main power switch 2
- Positions of Warning and Caution labels on the machine 3

Environment 4
- Batteries and rechargeable batteries 4
- The product 4
  - *Users in the EU, Switzerland and Norway* 4
  - *All Other Users* 4

Software use license 5
  - *Definition* 5
  - *License* 5
  - *Property* 5
  - *Duration* 5
  - *Warranty* 5
  - *Responsibility* 5
  - *Development* 5
- Registered trademarks 6
- Notice 6

Installation 7
- Location conditions 7
  - *Cautions of use* 7
- Safety information 8
  - *Safety During Operation* 8
  - *Power Supply* 9
- Rules for use symbols 9
- Terminal description 10
- Command panel 11
  - *Presentation* 11
  - *Accessing terminal functions* 11
- Packaging contents 12
- Device installation 12
- Loading paper 12
  - *Loading paper in the paper Tray* 12
- Handling of paper 12
  - *Humidity control* 12
- Handling the unit 12
  - *Operator shocks* 12
  - *Moving the unit* 12
  - *Handling the Toner Cartridge* 13
- Feed cassette paper insertion 13
- Cartridge installation 13
- Paper delivery stop 14
- Starting your device 14
  - *Device connection* 14
  - *Device initial setup* 15
- Paper insertion in the manual input tray 15

Copy 16
- Simple copy 16
- ECO mode copy 16
- Sophisticated copy 16
- ID Card Copy mode 16
- Special setup for the copy 17
  - *Resolution setup* 17
  - *Zoom setup* 17
  - *Analysis origin setup* 18
  - *Contrast setup* 18
  - *Brightness setup* 18
  - *Paper type setup* 18
  - *Paper tray selection* 18
  - *Flat-bed analysis margins setup* 18
  - *Left and right printing margins setup* 18
  - *Top and bottom printing margins setup* 19
  - *Format paper setup* 19

Parameters/Setup 20
- Language 20
- Technical Parameters 20
- Printing the functions guide 21
- Print the list of setups 21
- Lock the machine 21
  - *Lock the keyboard* 21
  - *Lock the Media service* 21
- Read the counters 21
  - *Scanned pages counter* 21
  - *Printed pages counter* 21
- Display the consumables status 22
- Calibrate your scanner 22

Games 23
- Sudoku 23
  - *Print a grid* 23
  - *Print the solution to a grid* 23

USB memory key 24
- Use of the USB memory key 24
  - *Print your documents* 24
    - Print the list of files located in the key 24
    - Print the files located in the key 24
  - *Delete your files located in the key* 25
- Analyse the USB memory key content 25
- Save a document on a USB memory key 25

PC Features 27
- Introduction 27
- Configuration requirements 27
- Software installation 27
  - *Installing the full software package* 27
  - *Installing drivers only* 29
    - Installing the drivers using the Companion Suite Pro software 29
    - Installing the drivers manually 30
  - *Connections* 31
- Multifunction Terminal's Supervision 32
  - *Checking the connection between the PC and the multifunction machine* 32
- Companion Director 32
  - *Graphical presentation* 32
  - *Utilities and applications activation* 32
- Companion Monitor 32
  - *Graphical presentation* 32
  - *Device management* 32

Selecting the current device 32
Status of the connection 33
Device parameters 33
Display the consumable status 33
Companion Suite Pro functionalities 34
Document analysis 34
Analysis with Scan To 34
Character recognition software (OCR) 34
Printing 35
Printing on the multifunction machine 35
Printing in duplex mode with the multifunction machine 35
Software Uninstallation 36
Uninstall the software from your PC 36
Uninstall the drivers from your PC 36
Uninstall the drivers using the Companion Suite Pro software 37
Uninstall the drivers manually 37
Maintenance 38
Service 38
General information 38
Toner cartridge replacement 38
Issues with smart cards 39
Cleaning 39
Scanner reading system cleaning 39
Printer cleaning 39
Printer external cleaning 39
Printer issues 39
Error messages 39
Paper jam 40
Miscellaneous issues 40
PC printing issues 40
PC printing via USB connection 41
Firmware update 41
Specifications 42
Physical specifications 42
Electrical specifications 42
Environmental specifications 42
Peripheral specifications 42

Security

Security directives

Before turning on your device, check that the outlet that you are going to plug it into conforms to the indications shown on the information plate (voltage, current, power network frequency) located on your device. This device shall be connected to a single phase power network. The device shall not be installed on bare ground.

Batteries and rechargeable batteries, packaging and electric and electronic equipment (EEE), shall be thrown away, as specified by the Instructions of the ENVIRONMENT chapter of this manual.

Because of the device model, the power connector is the only way to disconnecting the device from the power network, that is why it is imperative to apply the following safety measures: your device shall be connected to a power outlet located nearby. The outlet shall be easily accessible.

Your device is delivered with a grounded power cord. It is imperative to connect a grounded connector to a grounded outlet connected to the building earthing.

Repairs-maintenance: Repairs and maintenance should only be carried out by a qualified technician. No user serviceable parts inside the machine. To reduce the risk of electrical shock, you shall not proceed with these operations yourself, because by opening or removing the lids, you could expose yourself to two hazards:

- The laser beam can cause irreversible eye damage.
- Avoid contact with powered parts because it can lead to electrical shock with unfortunate consequences.

For installation conditions and safe use precautions, refer to chapter **Installation,** page 7.

Laser safety

CAUTION *Use of controls or adjustments or performance of procedures other than those specified in the User's Guide might result in hazardous radiation exposure.*

For Europe/Asia

This machine complies with IEC 60825-1:1993+A1:1997+A2:2001 standard, is classified as laser class 1 product and is safe for office/EDP use. It contains one class 3B laser diode, 10.72 mW max, 770-795 nm and other class 1 LEDs (280 µW at 639 nm).

Direct (or indirect reflected) eye contact with the laser beam might cause serious eye damage. Safety precautions and interlock mechanisms have been designed to prevent any possible laser beam exposure to the operator.

Certification

Declaration of conformity

Notice to Users in EU Countries

This product complies with the essential requirements and provisions of Directive 1999/5/EC of the European Parliament and of the Council of 9 March 1999 on radio equipment and telecommunications terminal equipment and the mutual recognition of their conformity.

Notice to Users Accessing Analog PSTN in EU Countries

This product is designed to be able to access analog PSTN in all EU countries. Local PSTN compatibility is dependent on software switch settings. Please contact your service representative if relocating this product to another country. In the event of problems, please contact your service representative in the first instance.

SP1100S / Aficio SP1100S: The CE declaration of Comformity is available on the Internet at URL :
http://www.ricoh.co.jp/fax/ce_doc

CE Marking Traceability Information (For EU Countries Only.)
Manufacturer:
Ricoh Co., Ltd.
3-6 Nakamagome 1-chome, Ohta-ku, Tokyo, 143-8555 Japan

Authorized representative:
Ricoh Europe PLC
66 Chiltern Street London

Symbols for the main power switch

In accordance with IEC 60417, this machine uses the following symbols for the main power switch:

- ❙ means POWER ON.
- ◯ means POWER OFF.

Positions of Warning and Caution labels on the machine

This machine has labels for ⚠ **WARNING** and ⚠ **CAUTION** at the positions shown below. For safety, please follow the instructions and handle the machine as indicated.

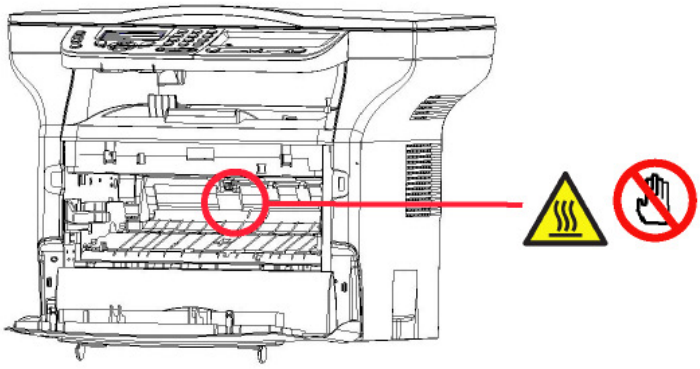

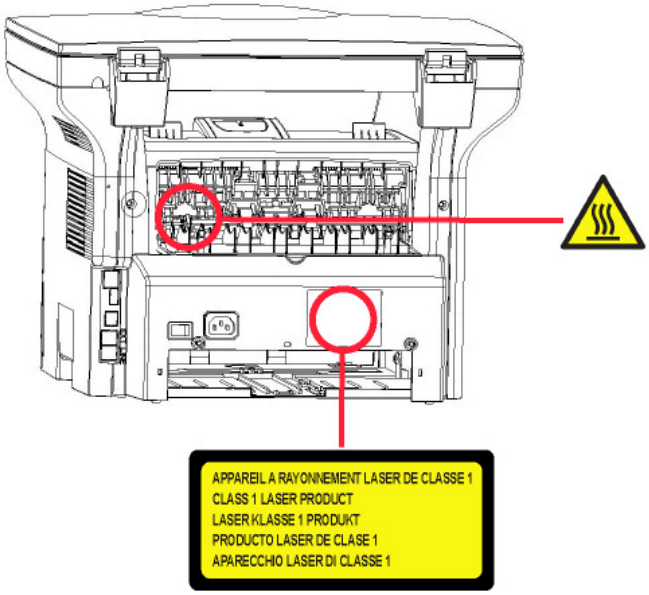

Environment

The preservation of the environment is of importance to the manufacturer. The manufacturer wishes to service the installations with respect to the environment and has chosen to integrate the environmental performance in the whole lifecycle of its products, throughout manufacturing, release, use and disposal.

Batteries and rechargeable batteries

If your product contains batteries or rechargeable batteries, these shall be disposed of at the designated collecting centers.

The product

Users in the EU, Switzerland and Norway

Our Products contain high quality components and are designed to facilitate recycling.
Our products or product packaging are marked with the symbol below.

The symbol indicates that the product must not be treated as municipal waste. It must be disposed of separately via the appropriate return and collection systems available. By following these instructions you ensure that this product is treated correctly and help to reduce potential impacts on the environment and human health, which could otherwise result from inappropriate handling. Recycling of products helps to conserve natural resources and protect the environment.
For more detailed information on collection and recycling systems for this product, please contact the shop where you purchased it, your local dealer or sales/service representatives.

All Other Users

If you wish to discard this product, please contact your local authorities, the shop where you bought this product, your local dealer or sales/service representatives.

Software use license

CAREFULLY READ ALL THE TERMS AND CONDITIONS OF THE PRESENT LICENSE BEFORE OPENING THE SEALED ENVELOPE CONTAINING THE SOFTWARE. OPENING THIS ENVELOPE INDICATES THAT YOU ACCEPT THESE TERMS AND CONDITIONS.

In case you should not accept the terms of this license, the CD-ROM packaging should be returned to the retailer unopened, along with the other components of the product.

Definition

The Software designates programs and associated documentation.

License

- This license allows you to use this Software on personal computers on a local network. You only have permission to use this Software to print on one multifunction machine; you can not lend the Software or authorize anyone to use it.
- You are allowed to make a back up copy.
- This license is non-exclusive and non-transferable.

Property

The manufacturer or its providers hold the Software property right. You only become the owner of the CD-ROM. You shall not modify, adapt, decompile, translate, create any derived piece, rent or sell the Software or the documentation. Any rights not explicitly approved are reserved by the manufacturer or its providers.

Duration

This license remains valid until cancelled. You can cancel it by destroying the program and the documentation as well as any other copies of them. This license will automatically be canceled in case you do not respect the terms of this license. If the license is rendered invalid, you agree to destroy all copies of the program and the associate documentation.

Warranty

The Software is provided "as is" with no warranties what so ever, whether expressed or implied, including without limitation, any warranties of merchantability or fitness for a particular purpose; all the risks concerning the results and performance of this Software are assumed by the buyer. In case the program should appear defective, all the repair and service expenses will be covered by the buyer.

Nevertheless, the license holder benefits from the following warranty: we guarantee that the CD-ROM on which the Software is recorded is free from hardware or manufacturing faults if used in normal conditions, the guarantee is valid for ninety (90) days from the delivery date, the copy of the receipt being the proof of purchase. In case of a CD-ROM fault that due to accident or misuse, the CD-ROM will not be replaced as per the warranty.

Responsibility

If the CD-ROM is not working properly, send it to the retailer together with a copy of the receipt. It is the retailer's sole responsibility to replace the CD-ROM. Nobody, not even the manufacturer who is involved in the creation, realization, merchantability and delivery of this program would be responsible for direct, indirect or immaterial damages, such as, but not limited to, loss of information, loss of time, execution loss, loss of revenue, loss of customers, due to the use or inability to use the program.

Development

With a constant concern for improvement, the manufacturer reserves the right to modify the Software specifications without any notice. In case of modification, your user right does not give you access to free updates.

Registered trademarks

Companion Suite Pro is a registered trademark of Sagem Communications.

Adobe® and the Adobe® products referred to here are registered trademarks of Adobe Systems Incorporated.

PaperPort®11SE is a registered trademark of ScanSoft.

Microsoft® Windows 2000®, Microsoft® Windows Server 2003®, Microsoft® Windows XP®, Microsoft® Windows Vista® and any other Microsoft® product referred to here are registered trademarks of Microsoft Corporation registered and/or used in the United States and/or in other countries.

All the other brands or products referred to as examples or in order to give additional information are registered trademarks of their respective owners.

The screenshots presented in this User's Guide have been created with Windows Vista. If you use another operating system, the screenshots displayed may be different from the ones presented in this booklet.

Notice

Do not copy or print any item for which reproduction is prohibited by law.
Copying or printing the following items is generally prohibited by local law: bank notes, revenue stamps, bonds, stock certificates, bank drafts, checks, passports, driver's licenses.
The preceding list is meant as a guide only and is not inclusive. We assume no responsibility for its completeness or accuracy.

If you have any questions concerning the legality of copying or printing certain items, consult with your legal advisor.

The informations contents of this user manual are subject to change without notice.

Installation

Location conditions

By choosing an appropriate location, you preserve the longevity of the machine. Check that the selected location has the following characteristics:

- Choose a well ventilated location.
- Make sure not to obstruct the ventilation grids located on the left and right sides of the device. During the installation, make sure to place the machine thirty centimeters away from the surrounding objects so all the lids can be easily opened.
- Make sure that this location does not present any ammonia nor any other organic gasses emission hazard.
- The ground outlet (refer to the security notices presented in the **Security** chapter) to which you plan to connect the machine shall be located close to this one and have an easy access.
- **Make sure that the machine is not directly exposed to sun light**.
- Make sure not to place the machine in an area exposed to an air flow generated by an air conditioning, heating or ventilation system, nor in an area subject to big temperature or humidity jumps.
- Choose a solid and horizontal surface on which the machine will not be exposed to intense vibrations.
- **Keep the machine away from any object that could obstruct its ventilation ports**.
- Do not place the machine close to hangings or any other flammable objects.
- Choose a location where the water and other splashes of liquid are limited.
- Make sure that this location is dry, clean and dust free.

Cautions of use

Take into account the important precautions below when using the machine.

Running environment:

- Temperature: 10 °C to 27 °C [50 °F to 80.6 °F] with an ambient humidity included between 15 to 80% (up to 32°C [89.6 °F] with an ambient humidity included between 15 to 54%).

Terminal:

The section below describes the precautions to be taken when using the machine:

- Never turn the machine off and never open the lids while printing.
- Never use gas or flammable liquids, or objects generating magnetic field close to the machine.
- When you unplug the power cord, always hold the connector without pulling the cord. A damaged cord presents a potential fire hazard or an electric shock hazard.
- Never touch the power cord with wet hands. You risk getting an electric shock.
- Always unplug the power cord before moving the machine. Otherwise, you could risk having the cord damaged and create a fire hazard or an electric shock hazard.
- Always unplug the power cord when you plan not to use the machine for a long period of time.
- Never put objects on the power cord, never pull it and never fold it. This could cause a fire hazard or an electric shock hazard.
- Always make sure that the machine is not sitting on the power cord or any other electric device communication cables. Make sure also that neither cord nor cable is introduced to the machine inner mechanism. This would expose you to a machine malfunction risk or to a fire hazard.
- Make sure that the printer is unplugged from the power outlet before connecting or disconnecting an interface cable to the printer (use a shielded interface cable).
- Never try to remove any fixed pane or hood. The machine contains high voltage circuits. Any contact with these circuits can cause an electric shock risk.
- Never try to modify the machine. This could cause a fire hazard or an electric shock hazard.
- Always make sure that paper clips, staples or other small metallic items do not get inside the machine via the ventilation ports or other ports. Such items create fire hazards or electric shock hazards.
- Prevent water and any other liquid from spilling on the machine or near to it. Any contact of the machine with water or liquid can cause a fire hazard or an electric shock hazard.

- If liquid or metallic item gets accidentally inside the machine, turn it off immediately, unplug the power cord and contact your retailer. Otherwise, you would face a fire hazard or an electric shock hazard.
- In case of heat, smoke, unusual smell or abnormal noise emissions, turn the machine off, unplug the power cord immediately and contact your retailer. Otherwise, you would face a fire hazard or an electric shock hazard.
- Avoid using the machine during an "electric storm", this can cause an electric shock hazard due to lightning.

Paper for printing: if you use paper already printed by your machine or another printer, the printing quality may not be optimal.

⚠ CAUTION	Make sure to place the machine in well ventilated premises. When operating, the printer generates a small amount of ozone. An unpleasant smell can come from the printer if it is used intensively in not well ventilated premises. For a secure use, make sure you place the machine in well ventilated premises.

Safety information

When using your product, the following safety precautions should always be followed.

Safety During Operation

In this information slip, the following important symbols are used:

⚠ WARNING:	Indicates a potentially hazardous situation which, if instructions are not followed, could result in death or serious injury.
⚠ CAUTION:	Indicates a potentially hazardous situation which, if instructions are not followed, may result in minor or moderate injury or damage to property.

⚠ **WARNING**

- Connect the power cord directly into a wall outlet and never use an extension cord.
- Disconnect the power plug (by pulling the plug, not the cable) if the power cable or plug becomes frayed or otherwise damaged.
- To avoid hazardous electric shock or laser radiation exposure, do not remove any covers or screws other than those specified in the User's Guide.
- Turn off the power and disconnect the power plug (by pulling the plug, not the cable) if any of the following conditions exists:
    - You spill something into the product.
    - You suspect that your product needs service or repair.
    - Your product's cover has been damaged.
- Do not incinerate spilled toner or used toner. Toner dust might ignite when exposed to an open flame.
- Disposal can take place at our authorized dealer or at appropriate collection sites.
- Dispose of the used toner cartridge (or bottle) in accordance with the local regulation.

⚠ **CAUTION**

- Protect the product from dampness or wet weather, such as rain, snow, and so on.
- Unplug the power cord from the wall outlet before you move the product. While moving the product, you should take care that the power cord will not be damaged under the product.
- When you disconnect the power plug from the wall outlet, always pull the plug (not the cable).
- Do not allow paper clips, staples, or other small metallic objects to fall inside the product.
- Keep toner (used or unused), toner cartridge (or bottle), ink (used or unused) or ink cartridge out of reach of children.
- Be careful not to cut yourself on any sharp edges when you reach inside the product to remove misfed sheets of paper or masters.

- For environmental reasons, do not dispose of the product or expended supply wastes at household waste collection point. Disposal can take place at our authorized dealer or at appropriate collection sites.
- Our products are engineered to meet the high standards of quality and functionality, and we recommend that you only use the expendable supplies available at an authorized dealer.

Power Supply

The socket-outlet shall be installed near the product and shall be easily accessible.

Rules for use symbols

WARNING
Indicates important safety notes.
Ignoring these notes could result in serious injury or death. Be sure to read these notes. They can be found in the “Safety Information” section of this manual.

CAUTION
Indicates important safety notes.
Ignoring these notes could result in moderate or minor injury, or damage to the machine or to property. Be sure to read these notes. They can be found in the “Safety Information” section of this manual.

Important
Indicates points to pay attention to when using the machine, and explanations
of likely causes of paper misfeeds, damage to originals, or loss of data. Be sure to read these explanations.

Note
Indicates supplementary explanations of the machine's functions, and instructions on resolving user errors.

Terminal description

Front and Back sides

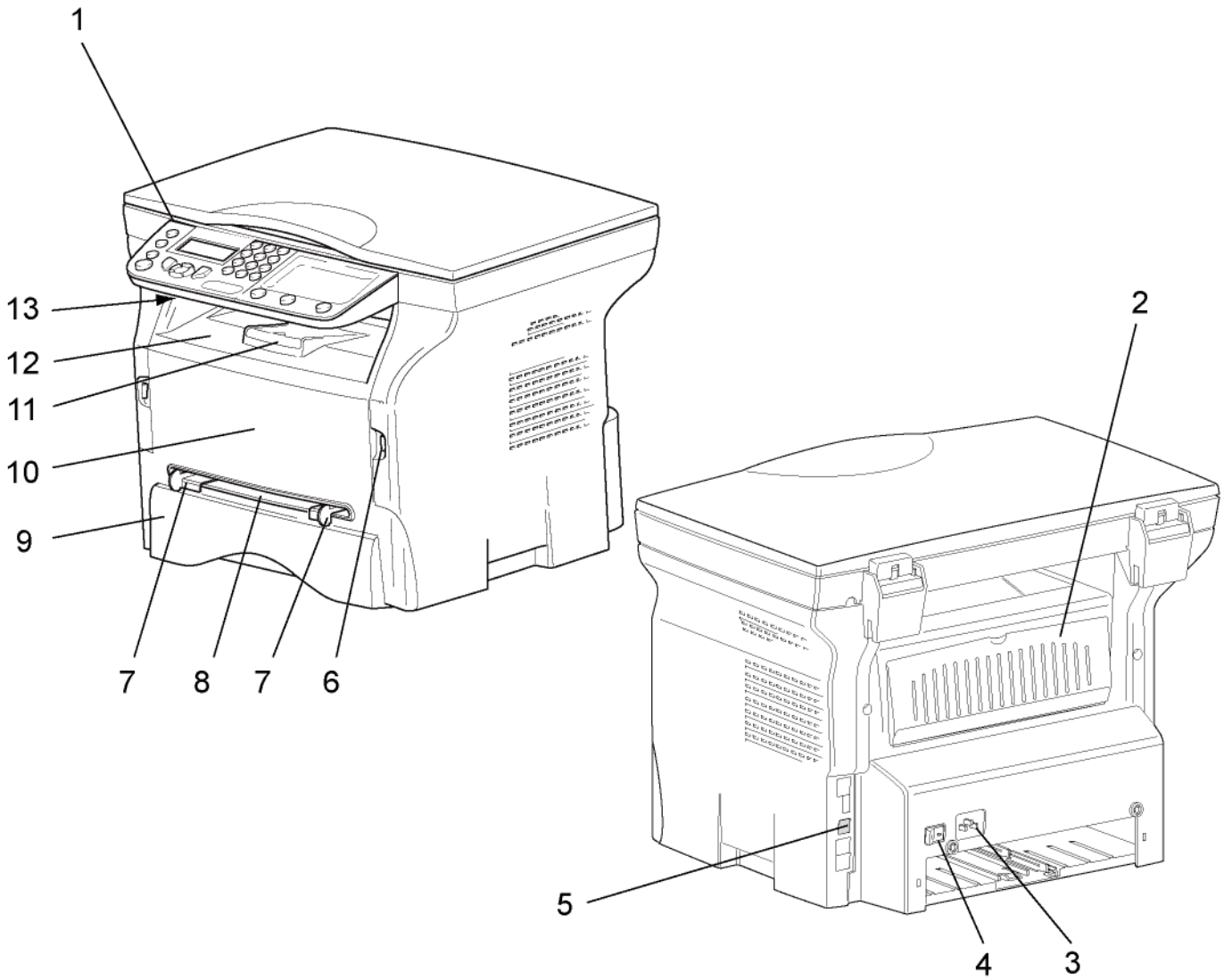

1. Control panel
2. Paper jam cover
3. Power supply cord connection
4. On/Off switch
5. Slave USB connection (for PC)
6. Master USB connection (USB key)
7. Manual paper feed setup guides
8. Manual input tray
9. Paper tray
10. Cartridge access cover
11. Fold-down stopper for paper delivery
12. Paper output
13. Smart card insertion point

Command panel

Presentation

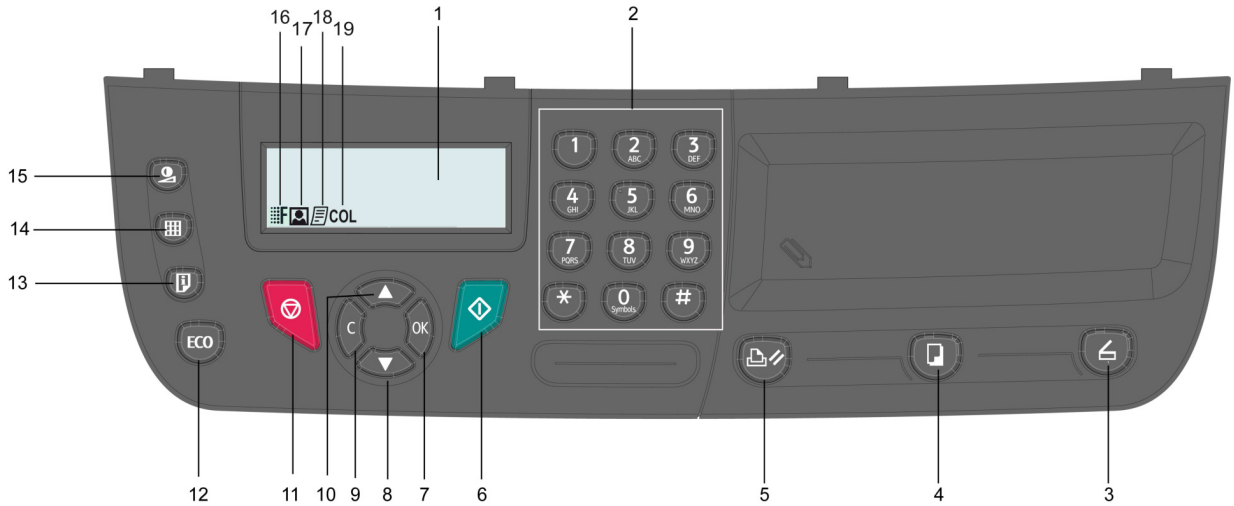

1. Screen.
2. Digital keypad.
3. Key : document analysis to the PC or a media (USB key).
4. Key : local copy.
5. Key : stops the current PC print job.
6. Key : Validation.
7. Key **OK**: confirms the displayed selection.
8. Key ▼ : menu access and navigation down the menus.
9. Key **C**: back to the previous menu and input correction.
10. Key ▲ : navigation up the menus.
11. Key : stops the current operation.
12. Key ECO: sets up the activation delay and toner save in copy mode.
13. Key : print menu (print functions list, machine settings, etc.).
14. Key : analysis resolution setup.
15. Key : contrast setup.
16. Icon F : resolution "**Quality Text**".
17. Icon : resolution "**Photo**".
18. Icon : resolution "**Text**".
19. Icon **COL** : colour mode.

Accessing terminal functions

All terminal functions and settings are available via the menu and are associated to a specific menu command. For example, **CONTRAST** copy settings are identified in the menu with the command **844**.

Two methods are available to access menu items : a step by step method or a shortcut method.

To access the **CONTRAST** settings with the Step by step method :

1 Press on ▼ to access the menu.
2 Use the ▼ or ▲ buttons to browse the menu and select **8-ADVANCED FCT**. Confirm with **OK**.
3 Use the ▼ or ▲ buttons to browse the **ADVANCED FUNCTIONS** menu and select **84-COPY**. Confirm with **OK**.
4 Use the ▼ or ▲ buttons to browse the **COPY** menu and select **844-CONTRAST**. Confirm with **OK**.

To access the **CONTRAST** settings with the shortcut method :

1 Press on ▼ to access the menu.
2 Enter 844 with the alphanumerical keypad to directly access the **CONTRAST** item.

Packaging contents

The packaging contains the items listed below:

Multifunction device

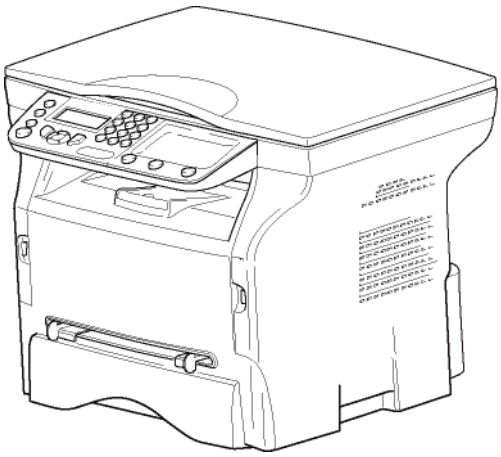

1 toner cartridge

1 installation guide and 1 PC installation CD ROM

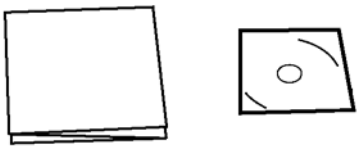

1 Safety Guide, Command Guide (For Europe and North America only)

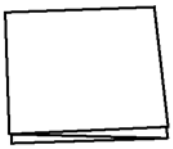

1 power cord

1 USB cord

Device installation

1. Unpack the device.
2. Install the device respecting the security notices stated at the beginning of this booklet.
3. Remove all stickers from the machine.
4. Remove the plastic protection film from the screen.

Loading paper

Loading paper in the paper Tray

(1) Paper to be used must be inserted face down, and abutting the side fence and back fence. Not abutting the paper may cause feed failure, skewing or paper jams.

(2) Amount of loaded paper must not exceed the loading mark. If the loading mark is exceeded, this may cause feed failure, skewing, or paper jams.

(3) Adding paper to the pile may cause double feeding, and should be avoided.

(4) When withdrawing the cassette from the main unit, always hold it with both hands.

Handling of paper

(1) Curling must be corrected before loading.

(2) Curls must not exceed 10 mm.

(3) Care must be taken with storage to prevent feed faults and image defects due to leaving the paper in conditions of high humidity.

Adding paper to the pile, or splitting the pile may cause feeding problems, and must be avoided.

Humidity control

(1) Paper which has become damp, or paper which has been left unused for a very long time, must not be used.

(2) After opening the paper, it must be kept in a plastic bag.

(3) Paper with waved ends, paper which is creased, paper with crumples, and any other non-normal paper must not be used.

Handling the unit

Operator shocks

During printing, shocks must not be applied to the paper feed cassette, tray, cover, and other parts of the machine.

Moving the unit

When moving the unit on a desk, it must be lifted, and not dragged.

Handling the Toner Cartridge

(1) Must not be stood on the side, or held upside down.
(2) Must not be shaken strongly.

Feed cassette paper insertion

Your device accepts a number of formats and types of papers.

Important *See chapter Specifications for the various formats and types of paper.*

1 Remove the paper feed cassette completely.

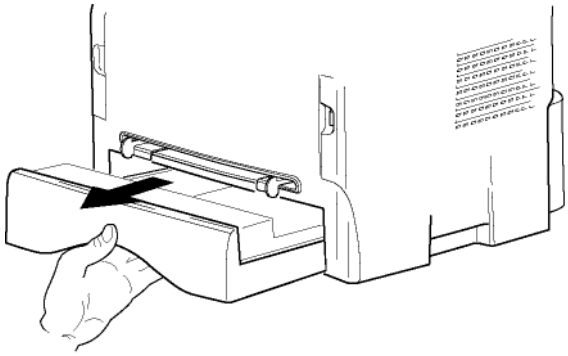

2 Push the lower panel down until it clicks.

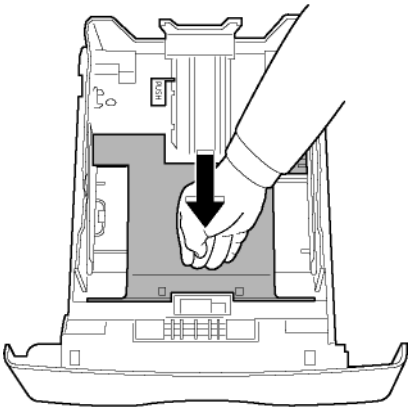

3 Setup the back side feed cassette stop by pushing the "PUSH" lever (**A**).
Then adjust the lateral paper guides to the paper format by pushing lever (**B**) located on the left guide. Adjust the length paper guide to the paper format by pushing lever (**C**).

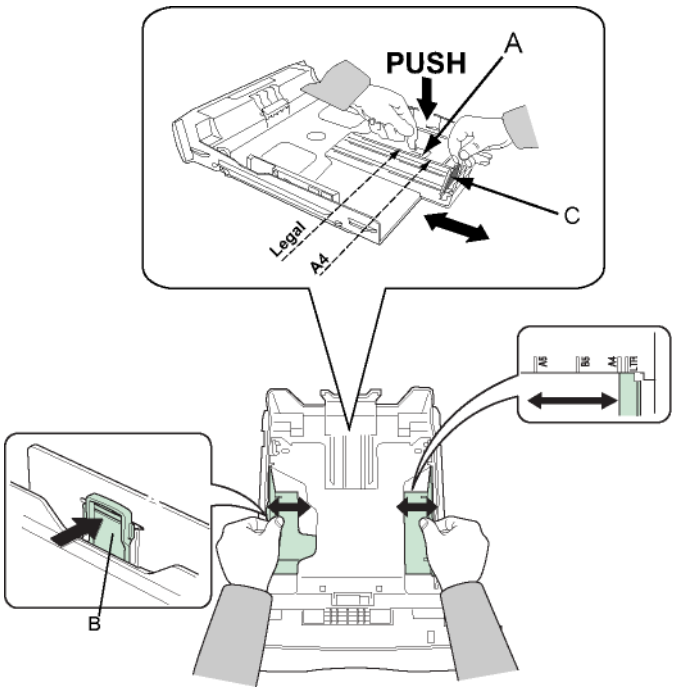

4 Take a paper stack, pull the paper off and align it on a flat surface.

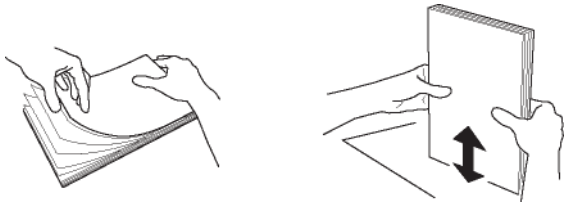

5 Put the paper stack in the feed cassette (200 sheets for 80 g/m² paper for instance).

6 Put the feed cassette back in its location.

Cartridge installation

1 Stand in front of the machine.

2 Push the left and right sides of the cover and pull it at the same time towards you.

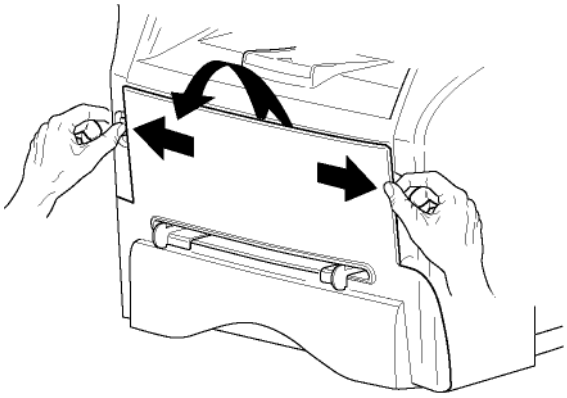

3 Remove the starter toner cartridge from its bag. Gently roll the cartridge 5 or 6 times to distribute the toner evenly inside the cartridge.
Thoroughly rolling the cartridge will assure the maximum copies per cartridge.

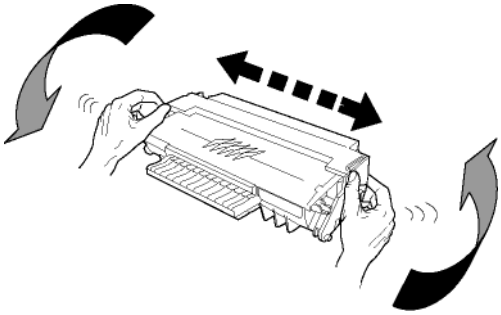

4 Hold it by its handle.

5 Insert the cartridge in its slot by pushing it until it clicks (last move down) as shown on the picture below.

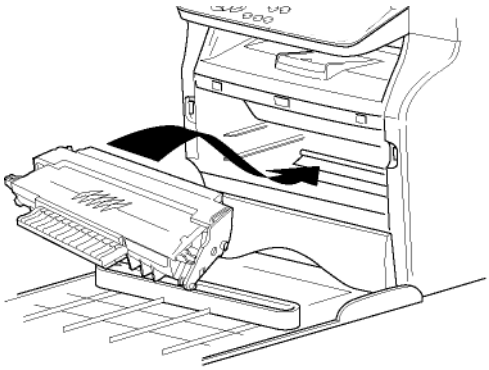

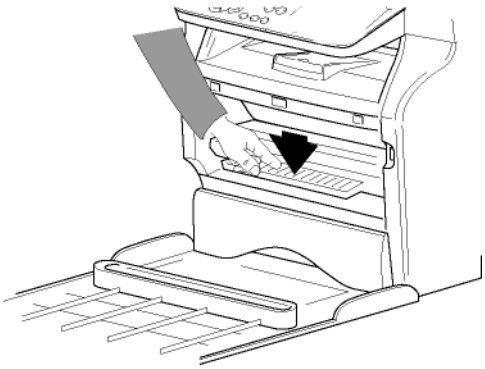

6 Close the cover.

Paper delivery stop

Adjust the paper delivery stop, depending on the format of the document to be printed. Do not forget to raise the flap to prevent the sheets from falling down.

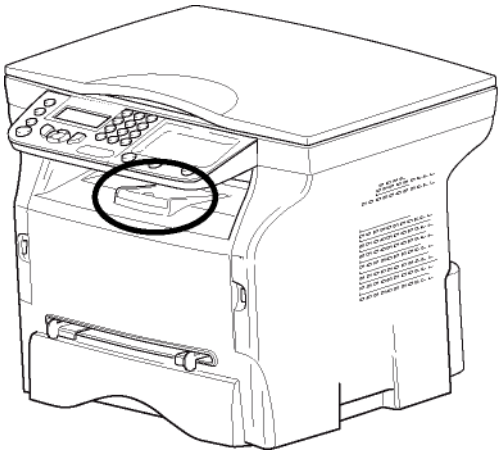

Starting your device

Device connection

WARNING *Before plugging the power cord, it is imperative to refer to the* ***Security directives****, page 1.*

1 Connect the power cord to the device.

2 Make sure that the On/Off switch is off (O position). Plug the power cord to outlet on the wall.

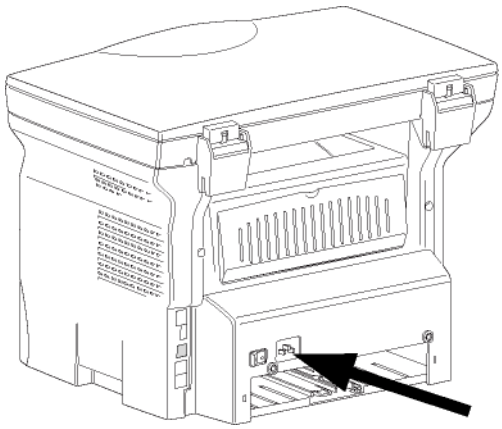

WARNING *The power cord is used as a 230 V power unit cut off. As a precaution, the outlet shall be located close to the device and be of easy access in case of danger.*

3 Press the On/Off button to turn on the device (I position).

Device initial setup

After a few seconds, when the machine has warmed up, the **Easy Install** function is launched and the LCD screen displays the following message:

1 - FRANCAIS
2 - ENGLISH

The **Easy Install** function will help you configure your machine by guiding you through the basic settings.

If you wish to modify the setting displayed, press the **OK** button. If you do not want to modify the displayed setting, press the **C** button: the **Easy Install** function then displays the next basic setting.

Note

If you do not want to carry out the initial setup, press the button. A confirmation message appears. Press the button again to confirm.
To manually modify and customise the machine settings, refer to **Parameters/Setup,** *page 20.*

1 Select the desired language using the ▲ or ▼ buttons and confirm with **OK**.

The setup is now complete and the functions list is automatically printed out.

The LCD screen displays the message **PAPER EMPTY** if no paper has been loaded in the paper tray (see **Loading paper,** page 12). Once paper has been loaded, printing will resume.

Paper insertion in the manual input tray

The manual input tray allows you to use various paper formats with greater weightings than the one used in the paper feed cassette.
Only one sheet or envelope can be fed at a time.

Important *See chapter Specifications for the various formats and types of paper.*

1 Spread the manual feed guides to the maximum.

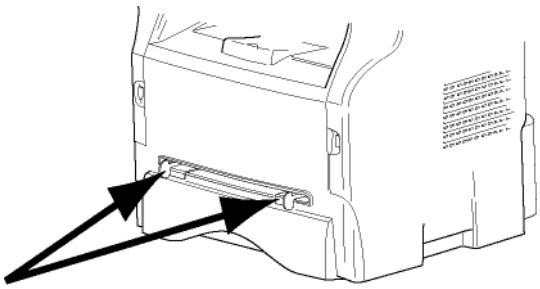

2 Insert a sheet or an envelope in the manual input tray.

3 Adjust the paper guides against the right and left edges of the sheet or the envelope.

4 Print making sure that the chosen paper format corresponds to the selected format on the printer.

Note: When using envelopes

- Feeding can be done only through the manual feed.
- Recommended area should be the area which excludes 15 mm from the leading edge, 10 mm from and both the left and right edges, and the rear edge.
- Envelopes which are not recommended may lead to improper printing.
- Curled envelope after printing should be fixed manually.
- Small crumples on the edge of the wide side of envelopes. Smearing, or less clear printing may appear on the reverse side.
- Set envelope by pressing the folding line of four edges properly after releasing air inside.
- Set envelope in a proper position after aligning in case it is bent or warped.
- Paper conditioning is not allowed. And it should be used under normal office environment.

Copy

Your machine has the function to make one or more copies.

You can also setup several parameters in order to make copies at your will.

Simple copy

In this case, the default parameters are applied.

1 Place the document to be copied face down on the glass, respecting the indications around the glass.

2 Press the button twice. The copy is made using the default parameters.

ECO mode copy

The ECO mode enables you to reduce the amount of toner consumed on the page so as to save your printing costs.
When the ECO mode is used, the toner consumption is reduced and the print density becomes lighter.

1 Place the document to be copied face down on the glass, respecting the indications around the glass.

2 Press the button.

3 Press the ECO button.

Sophisticated copy

The sophisticated copy allows to do custom setups for the current copy.

Note *You can start copy by pressing button at any time in below steps.*

1 Place the document to be copied face down on the glass, respecting the indications around the glass.

Note *After step 1, you can directly enter the number of copies with the numerical keypad and press the **OK** button to validate. Then refer to step 4.*

2 Press the button.

3 Enter the number of copies that you want and confirm with the **OK** button.

4 Choose the paper tray **AUTOMATIC** or **MANUAL** with the buttons ▲ or ▼, then confirm with the **OK** button.

5 Choose with the buttons ▲ or ▼ the printing option (see examples below) depending on the copy mode that you want:
- **1 Page to 1**, **1 Page to 4** or **1 page to 9**.

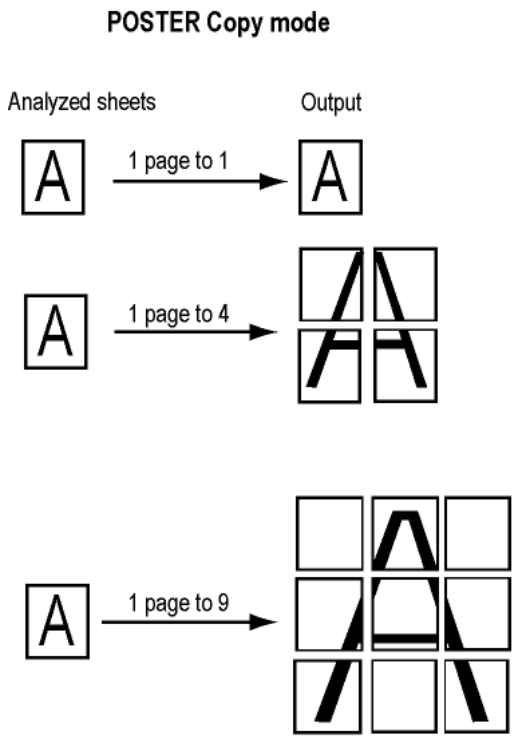

Confirm with the **OK** button.

6 Adjust the desired zoom level, from **25% TO 400%** with the buttons ▲ or ▼, confirm with the **OK** button (only available in **1 Page to 1** copy mode).

7 Adjust the desired origin values with the digital keyboard buttons ▲ or ▼ then confirm with the **OK** button.

8 Choose the resolution depending on the printing quality that you want AUTO, TEXT, QUALITY TEXT or PHOTO with the buttons ▲ or ▼, then confirm with the **OK** button.

9 Adjust the contrast level with the buttons ▲ or ▼, then confirm with the **OK** button.

10 Adjust the desired brightness level with the buttons ▲ or ▼, then confirm with the **OK** button.

11 Choose the paper type **NORMAL**, **THICK** with the buttons ▲ or ▼, then confirm with the **OK** button.

ID Card Copy mode

The ID CARD copy function is used for copying both sides of an identity card or driver's license type document on an A4 format sheet (original document size < A5) or on a Letter format sheet (original document size < Statement).

The LCD screen displays useful operating instructions (when the original document should be placed, when the document should be turned over, etc.) and asks for your confirmation to proceed with the operation.

Important *Zoom and Origin adjustments are not available in this copy mode.*

1 Press the button.

2 Enter the desired number of copies and confirm with the **OK** button.
3 Choose the paper tray **AUTOMATIC** or **MANUAL** with the buttons ▲ or ▼, then confirm with the **OK** button.

Important *Copying in ID Card mode is only possible on A4 (original document size < A5) or Letter (original document size < Statement) paper size. Make sure that the selected paper tray uses the correct paper size.*

4 Choose the copying option **ID CARD** with the buttons ▲ or ▼ and confirm with the **OK** button.
5 Choose the resolution depending on the desired printing quality **AUTO**, **TEXT**, **QUALITY TEXT** or **PHOTO** with the buttons ▲ or ▼, then confirm with the **OK** button. For optimal results with ID documents, select the **PHOTO** resolution.
6 Adjust the contrast level with the buttons ▲ or ▼, then confirm with the **OK** button.
7 Adjust the desired brightness level with the buttons ▲ or ▼, then confirm with the **OK** button.
8 Choose the paper type **NORMAL**, **THICK** with the buttons ▲ or ▼, then confirm with the **OK** button. The LCD screen displays the following message:

PUT ID CARD
THEN OK

9 Place your identity card or any other official document against the glass of the flatbed scanner, as shown below:

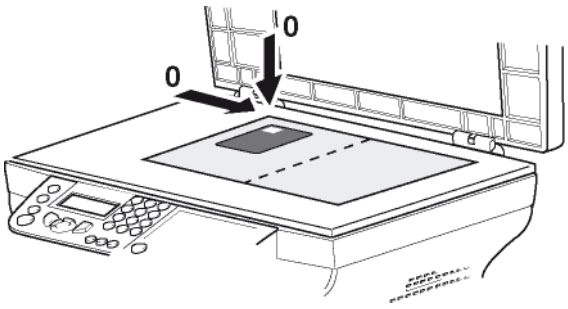

10 Press the **OK** button.
The document is scanned then the LCD screen displays the following message:

TURN UP DOC
THEN OK

11 Turn your document over then confirm with the **OK** button.

The machine prints out a copy of your document.

Special setup for the copy

Setups done through this menu become the device ***default setups*** *after you confirm.*

Important *When the quality of the printing is not satisfying, you can proceed to a calibration with MENU 80.*

Resolution setup

The ***RESOLUTION*** *parameter allows you to setup the photocopy resolution.*

▼ 841 - ADVANCED FCT/COPY/RESOLUTION

1 Choose the resolution with the buttons ▲ or ▼ according to the following table:

Parameter	Signification	Icon
AUTO	Low resolution.	none
TEXT	Standard resolution for documents containing text and graphics.	
QUALITY TEXT	Optimal resolution for documents containing text.	
PHOTO	Optimal resolution for documents containing photographies.	

2 Confirm your choice by pressing the **OK** button.

Note You can also make temporary changes to the resolution by pressing the button.

Zoom setup

The **ZOOM** parameter allows you to reduce or enlarge an area of a document by choosing the origin and the zoom level to apply to the document, from 25 to 400 %.

▼ 842 - ADVANCED FCT/COPY/ZOOMING

1 Enter the desired zoom level with the Alpanumerical keyboard or choose among predefined values with the buttons ▲ and ▼.
2 Confirm your choice by pressing the **OK** button.

Analysis origin setup

If you want, you can change the origin of the scanner.

By entering new values for X and Y in mm (X < 210 and Y < 280), you move the analysed area as shown on the diagram below.

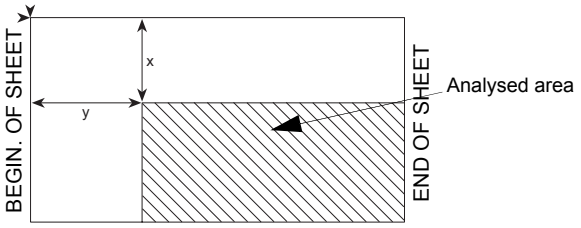

▼ ***843 - ADVANCED FCT/COPY/ORIGIN***

1 Select the X and Y coordinates with the buttons ▲ or ▼.
2 Setup the desired coordinates with the digital keyboard or the buttons ▲ and ▼, confirm your choice by pressing on the **OK** button.

Contrast setup

*The **CONTRAST** parameter allows to choose the photocopy contrast.*

▼ ***844 - ADVANCED FCT/COPY/CONTRAST***

1 Setup the desired level of contrast with the buttons ▲ and ▼, confirm by pressing the **OK** button.
2 You can also directly setup the desired contrast with the button, press several times on this button until the desired setup without using the Menu 845.
3 Quit this menu by pressing the button.

Brightness setup

*The **BRIGHTNESS** parameter allows to lighten or darken your original document.*

▼ ***845 - ADVANCED FCT/COPY/BRIGHTNESS***

1 Setup the desired brightness with the buttons ▲ and ▼.
2 Confirm your choice by pressing the **OK** button.
3 Quit this menu by pressing the button.

Paper type setup

▼ ***851 - ADVANCED FCT/SCAN. & PRINT/PAPER TYPE***

1 Select the paper **NORMAL** or **THICK** that you use with the buttons ▲ and ▼.
2 Confirm your setup by pressing the **OK** button.
3 Quit this menu by pressing the button.

Paper tray selection

The **Automatic** selection can have two meanings depending on the paper format defined on the paper trays. The following table describes the different cases.

	Default tray	Tray used for copy
Same paper format in the trays	**AUTOMATIC**	Selection between the main tray and the manual tray.
	MANUAL	The manual tray is used.
Different paper format in the trays	**AUTOMATIC**	The main tray is used
	MANUAL	The manual tray is used.

▼ ***852 - ADVANCED FCT/SCAN. & PRINT/TRAY PAPER***

1 Select the default paper tray to use, **AUTOMATIC** or **MANUAL,** with the buttons ▲ and ▼.
2 Confirm by pressing the **OK** button.
3 Quit this menu by pressing the button.

Flat-bed analysis margins setup

If you want to, you can offset the lateral margins of the document to the left or right during the analysis with your flat-bed scanner.

▼ ***854 - ADVANCED FCT/SCAN. & PRINT/ FLATBED MARG***

1 Setup the left / right margins offsets (by 0.5 mm steps) with the buttons ▲ and ▼.
2 Confirm by pressing the **OK** button.
3 Quit this menu by pressing the button.

Left and right printing margins setup

If you want to, you can offset the lateral margins of the document to the left or right during printing.

▼ ***855 - ADVANCED FCT/SCAN. & PRINT/ PRINTER MARG***

1 Setup the left / right margins offsets (by 0.5 mm steps) with the buttons ▲ and ▼.
2 Confirm by pressing the **OK** button.
3 Quit this menu by pressing the button.

Top and bottom printing margins setup

If you want to, you can offset the lateral margins of the document towards the top or the bottom during printing.

▼ 856 - ADVANCED FCT/SCAN. & PRINT/TOP PRINT.

1. Setup the top / bottom margins offsets (by 0.5 mm steps) with the buttons ▲ and ▼.
2. Confirm by pressing the **OK** button.
3. Quit this menu by pressing the button.

Format paper setup

This menu allows you to define the default paper format of the manual tray and the main tray. You can also setup the default scanning width.

▼ 857 - ADVANCED FCT/SCAN. & PRINT/ PAPER FORMAT

1. Select the paper tray for which you want to define a default paper format with the buttons ▲ and ▼.
2. Confirm by pressing the **OK** button.
3. Choose the paper format with the buttons ▲ or ▼ according to the following table:.

Paper tray	Available paper format
MAN. TRAY	A5, A4, Legal and Letter
AUTO. TRAY	A5, A4, Legal and Letter
SCANNER	LTR/LGL and A4

4. Confirm by pressing the **OK** button.
5. Quit this menu by pressing the button.

Parameters/ Setup

You can setup your machine as you like depending on the use. You will find in this chapter description of the functions.

You can print the functions guide and the available setup of your multifunction machine.

Note *Your machine is continuously being updated, new functions are regularly made available.*
Contact your Dealer to check if firmware updates are available for your machine (see **Firmware update,** *page 41).*

Language

This setting enables you to choose the menu language of your choice. By default, the multifunction machine is set to English.
To select the language:

▼ ***203 - SETUP / GEOGRAPHICAL / LANGUAGE***

1 Press ▼, enter **203** using the keypad. Confirm with **OK**.
2 Select the required language using ▼ and ▲, then press the **OK** button to confirm.
3 To exit this menu, press .

Technical Parameters

As delivered your machine is preset by default. However, you may adjust it to meet your requirements by resetting the technical parameters.

To set the technical parameters:

▼ ***29 - SETUP / TECHNICALS***

1 Select the desired parameter and confirm with **OK**.
2 With the buttons ▼ or ▲, modify the parameter settings by following the table below and press **OK**.

Parameter	Signification
8 - Eco energy	Choosing the printer standby delay: the printer will switch to standby after a delay (in minutes) of NON-operation or during the period of time of your choice. **Note**: you can also access this parameter by pressing the ECO key from the idle screen.
79 - Toner Management	This parameter helps you manage the consumable. When set to **WITH** [0-10%], you can only replace the toner cartridge when the toner has reached the threshold. If ever you need to replace the toner cartridge before the toner near end, set the parameter to **WITH** [0-100%] and proceed with the toner cartridge replacement (see chapter **Maintenance,** page 38). Disabling the toner management (parameter set to **WITHOUT**) is strongly not recommended as you may loose faxes and spill toner in your print mechanism. When set to **WITHOUT**, the screen displays **TONER ? %.**
80 - Toner save	Makes printing lighter to save toner cartridge ink.
91 - Printer error timeout	Time-out before document being printed is deleted following a print error in PC print mode.
92 - Printer wait timeout	Wait time-out for data from PC before the task is deleted in PC print.
93 - Replace format	Page format change. This parameter allows you to print a LETTER format document on A4 pages using the LETTER/A4 setting.

Printing the functions guide

Important ***The printing is not possible on A5 paper format.***

▼ 51 - PRINT / FUNCTIONS LIST

1 Press on ▼ and enter **51** with the digital keypad. The printing of the functions guide starts.

Print the list of setups

Important ***The printing is not possible on A5 paper format.***

To print the list of setups:

▼ 56 - PRINT / SETUP

Press ▼, enter **56** using the keypad.

The printing of the list of setups starts.

Note *You can also access the list of setups by pressing the button directly.*

Lock the machine

This function prevents non-authorized people from accessing the machine. An access code will be required every time someone wants to use the device. After each use, the device will lock automatically.

Before that you have to enter a lock code.

▼ 811 - ADVANCED FCT / LOCK / LOCKING CODE

1 Press on ▼, enter **811** with the digital keyboard.
2 Enter your lock code (4 digits) with the keyboard, confirm with **OK**.

Important *If a code is already registered, enter the old code before typing the new one.*

3 Enter again your lock code (4 digits) with the keyboard, confirm with **OK**.

4 Quit this menu by pressing the button.

Lock the keyboard

Everytime you use your machine, you will have to enter your code.

▼ 812 - ADVANCED FCT / LOCK / LOCK KEYBD.

1 Press on ▼, enter **812** with the keyboard.
2 Enter the lock code and confirm with **OK**.
3 With the buttons ▼ or ▲, choose **ON** and confirm with **OK**.

4 Quit this menu by pressing the button.

Lock the Media service

This function prevents access to the Media service. The access code will be required every time someone wants to use the USB key functions:

- analyse the contents of a connected USB key,
- print from a USB key, delete files,

To access the Media service locking menu:

▼ 816 - ADVANCED FCT / LOCK / LOCK MEDIA

1 Press ▼, enter **816** using the keypad.
2 Enter the four-digit locking code with the keypad.
3 Press **OK** to confirm.
4 With the buttons ▼ or ▲, choose **ON** and confirm with **OK**.

5 Quit this menu by pressing the button.

Read the counters

This function allows you to view the activity counters for your machine at any time.
According to your needs, you can read the counters for:

- scanned pages,
- printed pages.

Scanned pages counter

To view the number of pages scanned from your machine:

▼ 823 - ADVANCED FCT / COUNTERS / SCANNED PAGES

1 Press on ▼, enter **823** with the keyboard.
2 The number of sent pages appears on the screen.

3 Quit this menu by pressing the button.

Printed pages counter

To view the number of pages printed on your machine:

▼ 824 - ADVANCED FCT / COUNTERS / PRINTED PG

1 Press on ▼, enter **824** with the keyboard.
2 The number of printed pages appears on the screen.

3 Quit this menu by pressing the button.

Display the consumables status

You can read at any time the remaining toner in the cartridge. This level appears in percentage.

▼ ***86 - ADVANCED FCT / CONSUMABLES***

1. Press on ▼, enter **86** with the keyboard.
2. The available toner percentage appears on the screen.
3. Quit this menu by pressing the button.

Calibrate your scanner

You can do this operation when the quality of photocopied documents is not satisfactory anymore.

▼ ***80 - ADVANCED FCT / CALIBRATION***

1. Press on ▼, enter **80** with the keyboard, confirm with **OK**.
2. The scanner is triggered and a calibration is done automatically.
3. At the end of the calibration, the machine comes back to the screen saver.

Games

Sudoku

Sudoku is a Japanese puzzle. The game is in a grid format of three squares by three squares to be distributed in fields in zones of 3 × 3. Depending on the level of difficulty, more or fewer numbers are already entered at the start of the game. The aim of the game is to distribute the numbers 1 to 9 between the boxes in such a way that each number appears only once in each row, column and in each of the nine grids. There is only one solution.

Print a grid

There are 400 Sudoku grids available in total, 100 for each difficulty level.

Important ***The printing is not possible on A5 paper format.***

▼ ***521 - PRINT / SUDOKU / PRINT GRID***

1. Press ▼, enter **5** using the keypad. Confirm with **OK**.
2. Select **SUDOKU** using the ▼ or ▲ button.
3. Confirm with **OK**.
4. Select **PRINT GRID** using the ▼ or ▲ button.
5. Select the level of difficulty **EASY**, **MEDIUM**, **HARD**, **EVIL** using the ▼ or ▲ button.
6. Confirm with **OK**.
7. Choose the grid you want by entering the number on the numeric keypad (1 to 100).
8. Confirm with **OK**.
9. Choose the number of copies you want by entering a number from 1 to 9 on the numeric keypad.
10. Confirm with **OK**.

The number of copies of the grid requested is printed.

Print the solution to a grid

Important ***The printing is not possible on A5 paper format.***

▼ ***522 - PRINT / SUDOKU / PRT SOLUTION***

1. Press ▼, enter **5** using the keypad. Confirm with **OK**.
2. Select **SUDOKU** using the ▼ or ▲ button.
3. Confirm with **OK**.
4. Select **PRT SOLUTION** using the ▼ or ▲ button.
5. Select the level of difficulty **EASY**, **MEDIUM**, **HARD**, **EVIL** using the ▼ or ▲ button.
6. Confirm with **OK**.
7. Choose the grid you want by entering the number on the numeric keypad (1 to 100).
8. Confirm with **OK**.
9. Choose the number of copies you want by entering a number from 1 to 9 on the numeric keypad.
10. Confirm with **OK**.

The number of copies of the solution to the grid requested is printed.

USB memory key

You can connect a USB memory Key on the front side of your machine. The files stored in TXT, TIFF and JPEG formats will be analysed and you will be able to use the following actions:
- *print the stored files contained in your USB memory key[1],*
- *delete the files contained in your USB memory key,*
- *run an analysis on the contents of the inserted USB memory key,*
- *digitalise a document on your USB memory key,*

Use of the USB memory key

Important *Always respect the insertion way when you connect a USB memory key to the machine.*
Do not disconnect your USB memory key while the machine is reading its contents or writing contents.

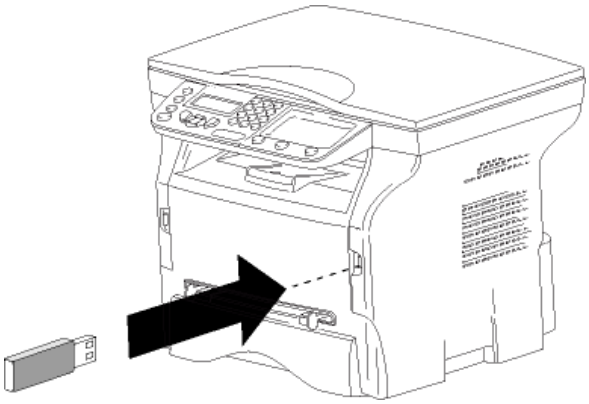

Print your documents

Important ***The printing is not possible on A5 paper format.***

You can print the stored files or a list of the files located in the USB memory key.

Print the list of files located in the key

To print the list of files located in the key:

▼ ***01 - MEDIA / PRINT DOC. / LIST***

1. Insert the USB memory key on the front side of the machine respecting the way of insertion.
2. **ANALYSIS MEDIA** appears on the screen.
3. Select **PRINT DOC.** with the ▼ or ▲ buttons and confirm with **OK**.
4. Select **LIST** with the ▼ or ▲ buttons and confirm with **OK**.
5. The list is shown in a table with the following information:
   - the analyzed files are indexed in an incremental 1 by 1 order,
   - the files name with their extension,
   - the date of the files last save,
   - the files size in Kbytes.

Print the files located in the key

To print the files located in the key:

▼ ***01 - MEDIA / PRINT DOC. / FILE***

1. Insert the USB memory key on the front side of the machine respecting the way of insertion.
   ANALYSIS MEDIA appears on the screen.
2. Select **PRINT DOC.** with the ▼ or ▲ buttons and confirm with **OK**.
3. Select **FILE** with the ▼ or ▲ buttons and confirm with **OK**.
4. You have three possibilities to print your files:
   - **ALL**, to print all the files located in the USB memory key.
     Select **ALL** with the ▼ or ▲ buttons and confirm with **OK**. The printing is started automatically.
   - **SERIES**, to print a series of files located in the USB memory key.
     Select **SERIES** with the ▼ or ▲ buttons and confirm with **OK**.
     FIRST FILE and the first indexed file appears on the screen. Select with the ▼ or ▲ buttons the first file of the series to print and confirm with **OK**. A star (✳) appears on the left side of the file.
     LAST FILE appears on the screen. Select with the ▼ or ▲ buttons the last file of the series to print and confirm with **OK**.

     Press the button.

     COPIES NUMBER appears on the screen, enter the desired number of copies with the numerical keypad and confirm with **OK**.
     Select the printing format (for JPEG files): **A4** or **LETTER** (depending on model), or **PHOTO** and confirm with **OK**.
     Select the printing format: **THICK** or **NORMAL** and confirm with **OK** to start printing.

1. It may be possible that some TIFF files of your USB memory key cannot be printed due to data format limitation.

- **SELECTION**, to print one or several files located in the USB memory key.
  Select with the ▼ or ▲ buttons the file to print and confirm with **OK**. A star (✱) appears on the left side of the file.
  Repeat this step for each file you want to print.

  Press the button.

  COPIES NUMBER appears on the screen, enter the desired number of copies with the numerical keypad and confirm with **OK**.

  Select the printing format (for JPEG files): **A4** or **LETTER** (depending on model), or **PHOTO** and confirm with **OK**.
  Select the printing format: **THICK** or **NORMAL** and confirm with **OK** to start printing.

5 Quit this menu by pressing the button.

Delete your files located in the key

You can delete files located in your USB memory key.

▼ ***06 - MEDIA / DELETE / MANUAL***

1 Insert your USB memory key on the front side of your machine respecting the way of insertion.
MEDIA ANALYSIS appears on the screen.
2 Select **DELETE** with the ▼ or ▲ buttons and confirm with **OK**.
3 Select **MANUAL** with the ▼ or ▲ buttons and confirm with **OK**.
4 You have three possibilities to delete your files:
- **ALL**, to delete all the files located in the USB memory key.
  Select **ALL** with the ▼ or ▲ buttons and confirm with **OK**.
  You come back to the previous menu.
- **SERIES**, to delete a series of files located in the USB memory key.
  Select **SERIES** with the ▼ or ▲ buttons and confirm with **OK**.
  FIRST FILE and the first indexed file appears on the screen. Select with the ▼ or ▲ buttons the first file of the series to delete and confirm with **OK**. A star (✱) appears on the left of the file.
  LAST FILE appears on the screen, select with the ▼ or ▲ buttons the last file of the series to delete and confirm with **OK**. A star (*) appears on the left side of the file.

  Press the button.

  You come back to the previous menu.
- **SELECTION**, to delete only one or several files located in the USB memory key.
  Select with the ▼ or ▲ buttons the file to delete and confirm with **OK**. A star (*) appears on the left side of the file.
  Repeat this step for each file you want to delete.

  Press the button.

  You come back to the previous menu.

5 Quit this menu by pressing the button.

Analyse the USB memory key content

After a period of inactivity, your machine will return to the main menu. To view the USB memory key again please proceed as follows:

▼ ***07 - MEDIA / ANALYSE MEDIA***

1 Press on ▼, enter **07** with the keyboard.
2 The USB memory key analysis is started.
3 You can print or delete the detected files located in your USB memory key. Refer to the previous chapters.

Save a document on a USB memory key

This function allows you to digitise and save a document directly in the folder MFPrinter Laser Pro LL2\SCAN on a USB memory key. The folder MFPrinter Laser Pro LL2\SCAN is created by the application.

Important *Before digitalising a document, make sure that your USB memory key has sufficient disk space. If not, you can delete manually the files. See section "Delete your files located in the key", page 25..*

1 Place the document to be copied face down on the glass.
2 Insert the USB memory key in the USB connector of your multifunction device.
The USB memory key analysis is started.
When the analysis is finished, the **MEDIA** menu is displayed.
3 Select **SCAN TO** with the ▲ or ▼ buttons then confirm with the <Touches>**OK** button.

Important *You can also access this function in two other ways:*
- *by pressing the button of the machine deck then by selecting SCAN-TO-MEDIA.*
- *By pressing the ▼ button from the screen saver then by typing 03 on the digital keyboard.*

4 Choose between **B&W SCAN** or **COLOUR SCAN** with the ▼ or ▲ buttons and confirm with **OK**.
5 With the alphanumeric keyboard, give a name to the scan file (up to 20 characters) and confirm with <Touches>**OK**.
6 Choose the scan format between **IMAGE** and **PDF**, and confirm to start the scan and the recording of the document.
IMAGE allows to have the same kind of file as a photo. **PDF** is a format for the digital documents

creation.

*With the **IMAGE** format, if you have selected:*

- ***BLACK&WHITE**, the picture will be saved in TIFF format.*
- ***COLOUR**, the picture will be saved in JPEG format.*

You can choose the image resolution that will be digitized to the USB memory key; the default resolution is AUTO.

Important

Press the button several times and select the resolution you require:

- *Scanning in **BLACK&WHITE**:*
  - *icon: text resolution.*
  - *icon: photo resolution.*
  - *no icon: auto resolution.*
- *Scanning in **COLOUR**:*
  - *icon: text resolution.*
  - *no icon: auto resolution.*

The beginning button immediately starts the scan and sends a file to the support with the parameters defined in the analysis format.

PC Features

Introduction

The Companion Suite Pro software allows the connection of a personal computer with a compatible multifunction machine.

From the PC, you can:

- manage the multifunction machine, allowing you to set it up according to your needs,
- print your documents on the multifunction machine from your usual applications,
- scan colour, grey scale or black and white documents and edit them on your PC.

Configuration requirements

The minimum configuration requirements for your personal computer are:

Supported operating systems:

- Windows 2000 with at least Service Pack 4,
- Windows XP x86 (Home and Pro) with at least Service Pack 1,
- Windows 2003 server for printing driver only,
- Windows Vista.

Processor:

- 800 MHz for Windows 2000,
- 1 GHz for Windows XP x86 (Home and Pro),
- 1 GHz for Windows Vista.

A CD-ROM drive

A free USB port

600 Mbytes of available disk space for the installation
RAM memory:

- 128 Mbytes minimum for Windows 2000,
- 192 Mbytes minimum for Windows XP x86 (Home and Pro),
- 1 GByte for Windows Vista.

Software installation

This section describes the following installation procedures:

- full installation of the Companion Suite Pro software,
- installation of the drivers only.

Installing the full software package

Turn your PC on. Open an account session with the administration rights.

1. Open the CD-ROM drive, insert the installation CD-ROM and close the drive.
2. An installation procedure is automatically run (Auto run). If it does not, double-click on setup.exe at the CD-ROM's root.
3. A screen titled **COMPANION SUITE PRO LL2** appears. This screen allows you to install and uninstall the software, access the product's user guides or browse the CD-ROM contents.
4. Place your cursor on **INSTALL PRODUCTS** and confirm with left-click of the mouse.

5. The Products Installation screen appears.
   Place your cursor on **ALL PRODUCTS** and confirm by left-click with the mouse.

Note

For full installation copies on your hard disk the software required for the good execution of the Companion Suite Pro kit, which is:
- Companion Suite Pro LL2 (machine management software, printer drivers, scanner, ...),
- Adobe Acrobat Reader,
- PaperPort®SE.
You may already be the owner of a version of the software available in the installation CD-ROM.
*In this case use the **CUSTOMIZED** installation, select the software that you want to install on your hard drive and confirm your choice.*

6 The welcome screen appears. Click on the **NEXT** button to launch the installation of the Companion Suite Pro in your PC.

7 To continue, you need to accept the proposed license agreement.

8 Click on the **NEXT** button.

9 The final installation is ready to be executed. Click on the **INSTALL** button.

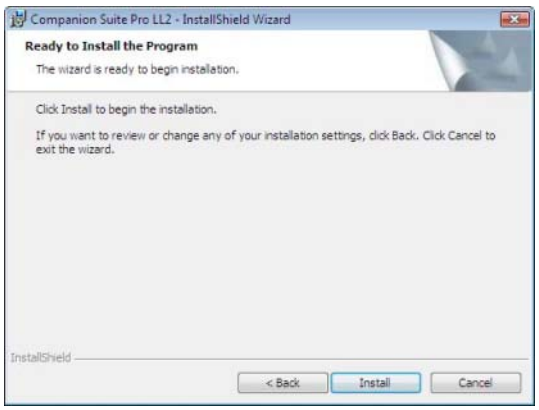

The following screen appears to indicate the progression of the installation.

10 Click on **OK** to finish the installation.

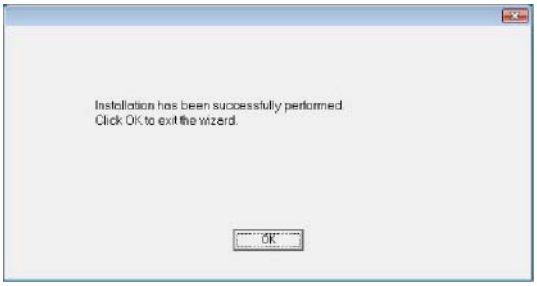

Your Companion Suite Pro kit is successfully installed on your PC.

You can now connect your multifunction machine, refer to paragraph **Connections**.

You can start the multifunction machine's management software from the menu **START > ALL PROGRAMS > COMPANION SUITE > COMPANION SUITE PRO LL2 > COMPANION DIRECTOR** or by clicking on the icon **COMPANION - DIRECTOR** located on your desktop.

Installing drivers only

This section describes the following installation procedures:

- installation of drivers using the Companion Suite Pro software,
- manual installation of drivers.

Installing the drivers using the Companion Suite Pro software

Turn your PC on. Open an account session with the administration rights.

1 Open the CD-ROM drive, insert the installation CD-ROM and close the drive.

2 An installation procedure is automatically run (Auto run). If it does not, double-click on setup.exe at the CD-ROM's root.

3 A screen titled **COMPANION SUITE PRO LL2** appears. This screen allows you to install and uninstall the software, access the product's user guides or browse the CD-ROM contents.

4 Place your cursor on **INSTALL PRODUCTS** and confirm with left-click of the mouse.

5 The Products Installation screen appears. Place your cursor on **CUSTOMIZED** and confirm by left-click with the mouse.

6 Place your cursor on **COMPANION SUITE PRO LL2** and confirm with left-click of the mouse.

7 The welcome screen appears. Click on the **NEXT** button to launch the installation of the Companion Suite Pro kit on your PC.

8 To continue, you need to accept the proposed license agreement.

9 Click on the **NEXT** button.

10 Select **INSTALL DRIVERS** in the list and click on the **NEXT** button.

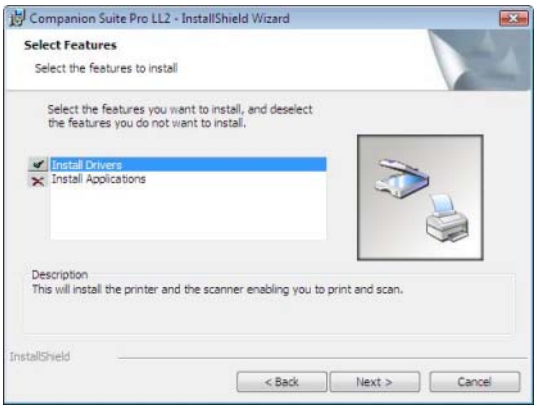

11 Select the destination folder for installation and click on the **NEXT** button.

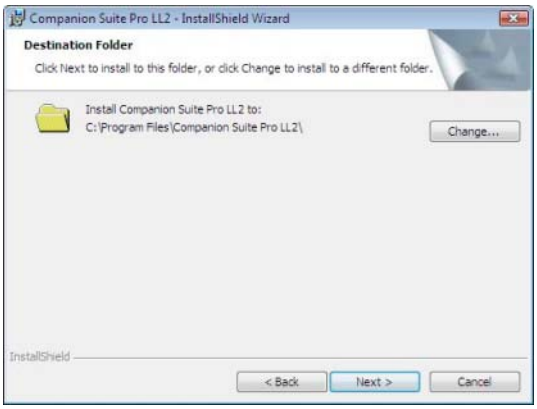

12 The final installation is ready to be executed. Click on the **INSTALL** button.

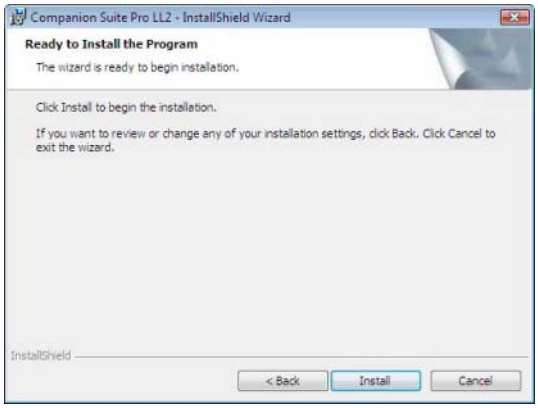

13 A screen informs you of the installation progress.

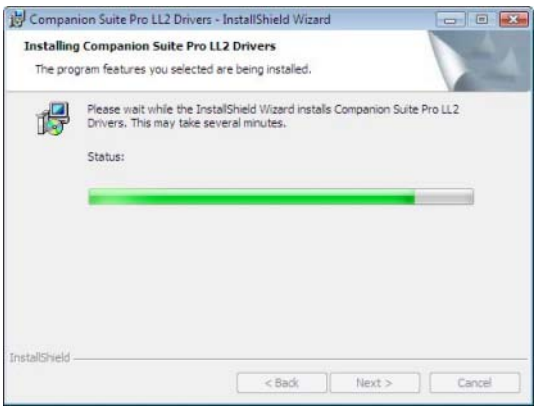

14 Click on **OK** to finish the installation.

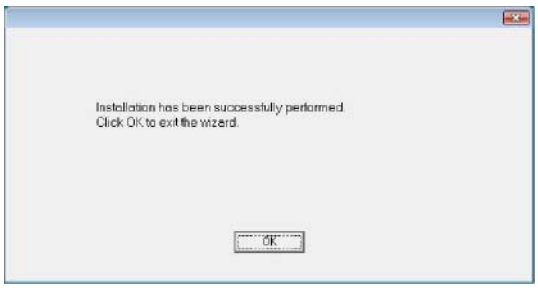

The Companion Suite Pro software is now installed on your PC.

You can now connect your multifunction machine, refer to paragraph **Connections**.

Installing the drivers manually

You can install the printer and scan drivers manually without running any setup software.

Note *This installation mode is only possible on Windows 2000, XP and Vista.*

1 Locate your USB cable connectors and connect as shown below on the picture.

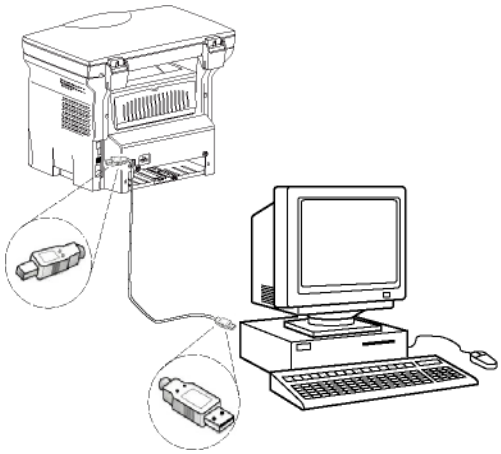

2 Power on your multifunction machine.
The PC detects the device.

3 Click on **LOCATE AND INSTALL DRIVER SOFTWARE (RECOMMENDED)**.

The following screen appears:

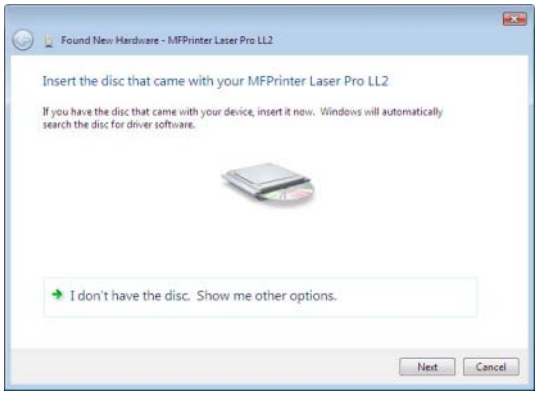

4 Open the CD-ROM drive, insert the installation CD-ROM and close the drive.
The drivers are detected automatically.

5 Select LASER PRO LL2 in the list and click on **NEXT**.

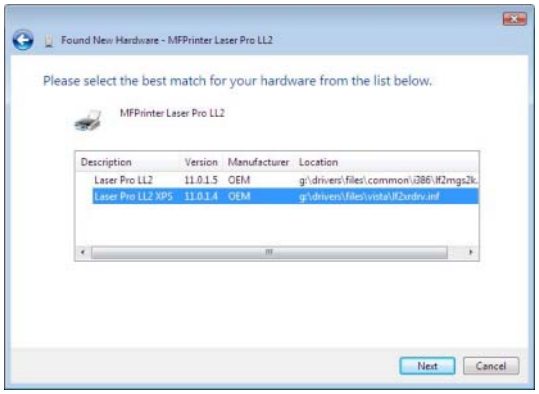

6 A screen informs you that the drivers have been installed. Click on the **CLOSE** button.

You can now use the multifunction machine to print or scan your documents.

Connections

Make sure that your multifunction machine is powered off. The connection between the PC and the machine requires a USB 2.0 shielded cable no more than 3 meters long.

Important

*It is recommended to install the Companion Suite Pro software first and then to connect the USB cable to your machine (***See section "Installing the full software package", page 27.***).*

If you connect the USB cable before installing the Companion Suite Pro software the recognition system (plug and play) identifies automatically that new hardware has been added. To start your machine drivers installation, refer to paragraph **Installing the drivers manually** *and follow the instructions on screen. When you use this procedure, only printing and scanning functions are activated.*

1 Locate your USB cable connectors and connect as shown below on the picture.

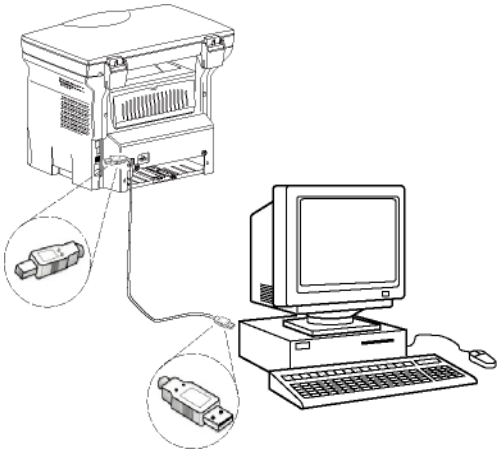

2 Power on your multifunction machine.
The PC detects the device and the drivers are automatically installed.

3 Once the installation is finished, a message indicates that the drivers are installed correctly.

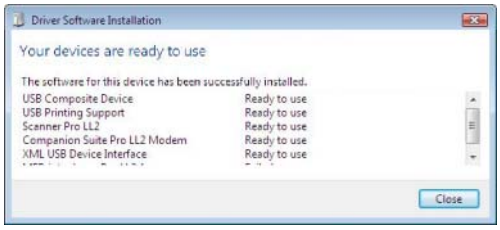

You can now use the multifunction machine to print or scan your documents.

Multifunction Terminal's Supervision

The software that you have installed contains two multifunction machine management applications, **COMPANION DIRECTOR** and **COMPANION MONITOR**, which allow you to:

- check whether the multifunction machine is connected to your PC,
- monitor the multifunction machine activities,
- monitor the status of the multifunction machine consumables from the PC,
- quickly access the graphic editor applications.

To manage the multifunction machine, run the Companion Director application by clicking on the icon located on your desktop or from the menu **START >ALLPROGRAMS > COMPANION SUITE >COMPANION SUITE PRO LL2 > COMPANION DIRECTOR**.

Checking the connection between the PC and the multifunction machine

To check if the connection between the devices is good, run the **COMPANION MONITOR** software from the icon located on the desktop and check that the same information is displayed on the multifunction machine.

Companion Director

This graphical Interface allows you to run the utilities and the software to manage your multifunction machine.

Graphical presentation

Run the application by clicking on the **COMPANION DIRECTOR** icon located on your desktop or from the menu **START >ALLPROGRAMS > COMPANION SUITE >COMPANION SUITE PRO LL2 > COMPANION DIRECTOR**.

Utilities and applications activation

The Companion Suite Pro graphical interface allows you to run the following utilities and software:

- get **HELP** from the current documentation,
- run the **PAPERPORT** software (Doc Manager).

To run a software or utility contained in the Companion Suite Pro kit, place the cursor on it and left-click with the mouse.

Companion Monitor

Graphical presentation

Run the application by clicking on the **COMPANION MONITOR** icon located on your desktop or from the menu **START >ALLPROGRAMS >COMPANION SUITE >COMPANION SUITE PRO LL2 > COMPANION MONITOR**.

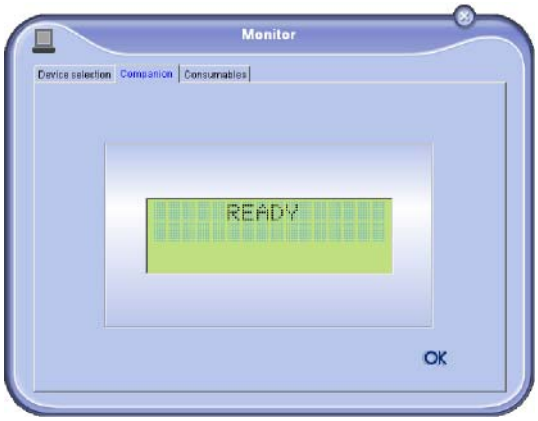

From this screen you can monitor the information or configure your multifunction machine from the tabs:

- **DEVICE SELECTION**: Displays the list of devices managed by the PC.
- **COMPANION**: Presents the multifunction machine screen (USB connection only, not compatible with Chinese, Korean and Russian language).
- **CONSUMABLES**: Displays the consumables status.

Device management

This tab shows the list of devices managed by the PC.

Selecting the current device

Only one device at a time may be connected to the PC. The current device may be selected by clicking on the radio button corresponding to the device.

Status of the connection

The status of the connection between the current device and the PC is indicated by a colour. The following table defines the possible states of the connection.

Colour	State
Yellow	Connection in progress.
Green	Connection established.
Red	The PC cannot connect to the device. Check the USB connection.

Device parameters

1 Select a device by clicking on its line in the list and click on **PROPERTIES** to configure the scanning parameters to be applied for this device when you use the **SCAN TO** function.

2 Select the desired scan **MODE** in the drop-down menu.

3 Select the desired scan **RESOLUTION** in the drop-down menu.

4 Click **OK** to confirm the new parameters.

Display the consumable status

The following information will be available from the **CONSUMABLES** tab:

- current consumables status,
- number of printed pages,
- number of scanned pages,
- number of sent and received pages.

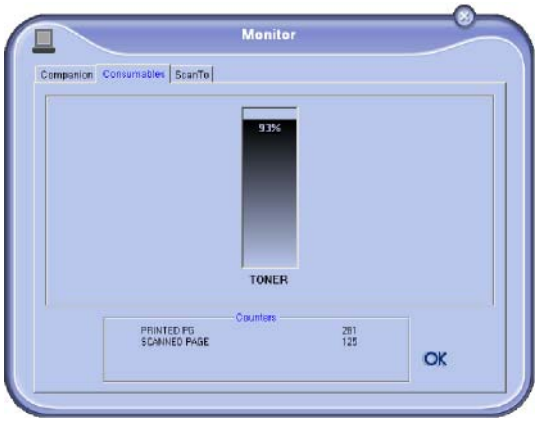

Companion Suite Pro functionalities

Document analysis

The document analysis can be carried out in two ways:

- either by the **SCAN TO** function (application accessible from the Companion Director window or from the **SCAN** button on the machine),
- or directly from a standard compatible application.

Analysis with Scan To

Run the application by clicking on the **COMPANION DIRECTOR** icon located on your desktop or from the menu **START >ALL PROGRAMS > COMPANION SUITE > COMPANION SUITE PRO LL2 > COMPANION DIRECTOR**.

1 Click on the **SCAN TO** graphical image or press the **SCAN** button on your machine and select **SCAN-TO-PC**.

2 You can follow the ongoing digitisation on a screen.

3 At the end of the digitisation, the scanned picture appears in the PaperPort window.

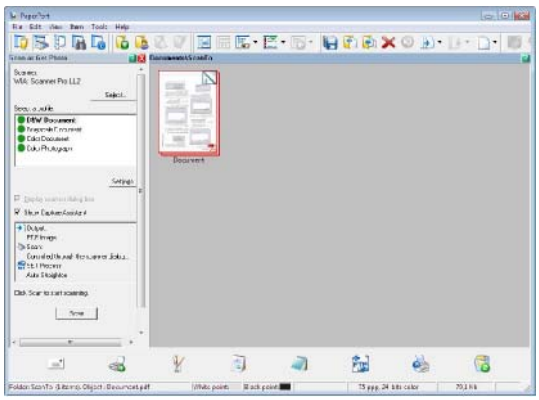

Note *If the PaperPort software is not installed on your hard drive, the scanned picture will appear on your desktop in TIFF format.*

To scan a document from PaperPort:

1 Click on **FILE** > **SCAN**.

2 Select the desired scanner.

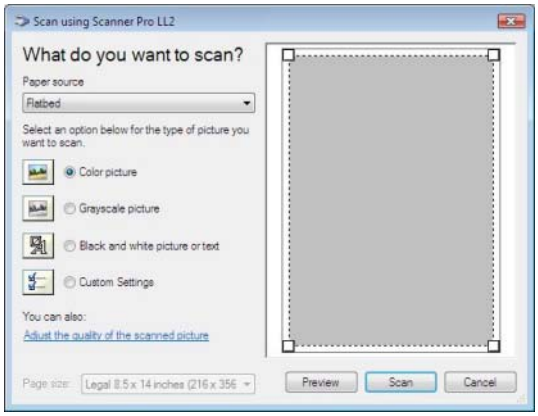

3 Customise the advanced properties of the digitisation by clicking on the **ADJUST THE QUALITY OF THE SCANNED PICTURE** link.

4 Adjust the desired parameters and click on the **OK** button.

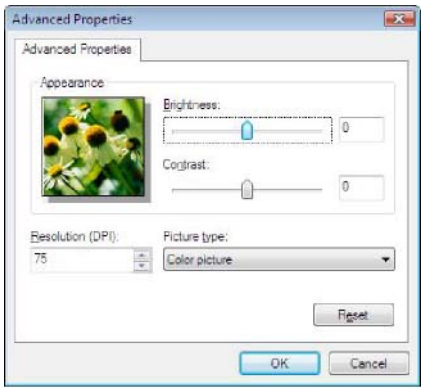

5 Click on the **SCAN** button, you can follow the ongoing digitisation on a screen.

Character recognition software (OCR)

The character recognition function allows to create a usable data file for desktop applications from a hardcopy document or from a picture.

The character recognition only works for printed characters, such as printer outputs or typed text. Nevertheless you can request for a handwritten text block to be kept intact (a signature for instance) by outlining it. Given your machine environment and the character recognition from your machine, the OCR is done with a Drag&drop of a document from the PaperPort to the Notepad icon .

Note *For more details about the usage of this software, check the online help of the product.*

Printing

You have the possibility to print your documents via the USB connection.

During the installation of the Companion Suite Pro software, the **LASER PRO LL2** printer driver will be installed automatically onto your PC.

Printing on the multifunction machine

Printing a document on the multifunction machine from your PC is like printing a document in Windows.

1. Use the **PRINT** command from the **FILE** menu of the currently open application on the screen.
2. Select the **LASER PRO LL2** printer.

Printing in duplex mode with the multifunction machine

The machine offers the possibility to print a document in manual duplex mode from your PC.

Warning

In manual duplex, the print quality and paper transport are not guaranteed.

- If some trouble occurred to the paper during the print of the first side, such as wrinkle, dog ear or staple, do not use the paper for manual duplex.
- When you load paper, please true up the end of paper on a flat surface.

For best results, we recommend that you use 80 g/m² A4 paper or 20 lbs/m² Letter paper.

To print a document in manual duplex mode:

Important

The duplex printing mode is available only in a paper format managed by the paper tray.
The manual tray cannot be used to print in duplex mode.

1. Use the **PRINT** command from the **FILE** menu of the currently open application on the screen.
2. Select the **LASER PRO LL2** printer.
3. Check the **Duplex** box and choose among the two binding modes:

Binding mode	Printing
Long sides	
Short sides	

4. Click on the **OK** button to begin printing.
5. The machine prints the odd pages (from the higher odd page to page 1) and the LCD screen displays:

**** PRINTING ****
**** PC ****

6. Once the odd pages are printed, the LCD screen displays the message ****PUT THE PRINTED SHEETS IN THE PAPER TRAY WITH THE PRINTED SIDE VISIBLE...**:

**** PUT THE PRIN**
... AND PRESS <OK>

Important

The PC generates and prints a page explaining how to reload the sheets for a duplex job. Read this page carefully and place it back with the other sheets.
it is very important that you return the explanation sheet to the paper tray to continue printing correctly.

7. Place the sheets in the paper tray as indicated on the explanation page and below.
The following illustrations describe the necessary operations depending on the selected binding mode:

- Long sides

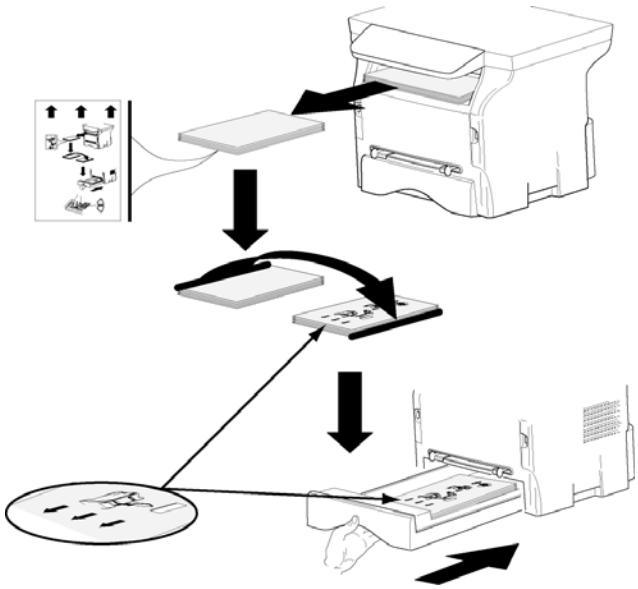

- Short sides

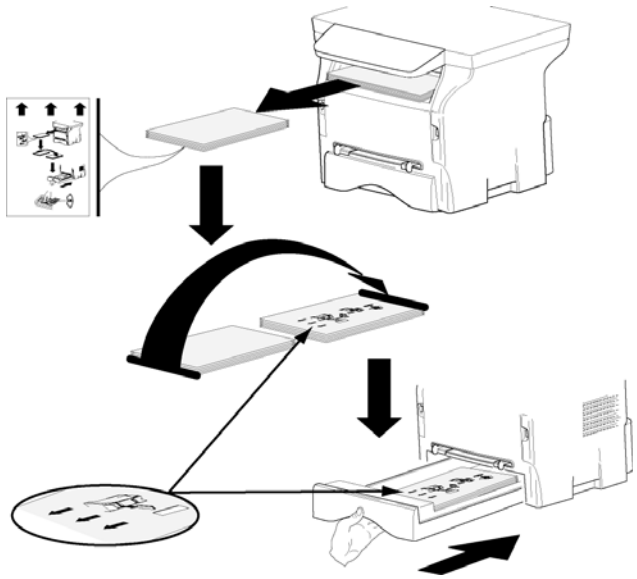

8 Press **OK** on the command panel to resume printing.

9 Even pages are printed on the other side of the sheets. Once all pages are printed, remove the explanation sheet.

Important *If a paper jam or a paper format error occurs, the job is cancelled. You must then resubmit the print job.*

Software Uninstallation

This section describes the following procedures:

- full uninstallation of the Companion Suite Pro software,
- uninstallation of the drivers only.

Uninstall the software from your PC

Turn your PC on. Open an account session with the administration rights.

Run the programs removal from the menu **START >ALL PROGRAMS >COMPANION SUITE > COMPANION SUITE PRO LL2 > UNINSTALL**.

1 A confirmation screen appears. Click on the **YES** button to continue the Companion Suite Pro program removal.

2 The uninstall program is launched. You can cancel the removal by clicking on **CANCEL.**

3 Click on the **OK** button.

4 You need to restart your system at the end of the procedure. Click on the **YES** button.

Uninstall the drivers from your PC

Turn your PC on. Open an account session with the administration rights.

Depending on the installation mode used, select the required uninstallation mode:

- If you have installed the drivers with the Companion Suite Pro software, see paragraph Uninstall the drivers using the Companion Suite Pro software.
- If you have installed the drivers manually, see paragraph Uninstall the drivers manually.

Uninstall the drivers using the Companion Suite Pro software

Run the programs removal from the menu **START >ALL PROGRAMS >COMPANION SUITE >COMPANION SUITE PRO LL2 > UNINSTALL**.

Note *You can also uninstall **COMPANION SUITE PRO LL2** drivers using the Windows function ADD/REMOVE PROGRAMS from the control panel.*

1 A confirmation screen appears. Click on the **YES** button to continue the **COMPANION SUITE PRO LL2** drivers program removal.

2 The uninstall program is launched. You can cancel the removal by clicking on **CANCEL.**

Uninstall the drivers manually

The following drivers must be removed:

- print driver
- scan driver
- modem driver

To remove the print driver:

1 Open the **PRINTERS** window (**START > CONTROL PANEL > PRINTERS AND FAXES** or **START > CONTROL PANEL > HARDWARE AND SOUND > PRINTERS,** depending on the operating system).
2 Delete the **LASER PRO LL2** icon.
3 In the **PRINTERS** window, right-click with the mouse and select **RUN AS ADMINISTRATOR > SERVER PROPERTIES**.
4 Select the **DRIVERS** tab.
5 Select the **LASER PRO LL2** driver and click on the **REMOVE** button.

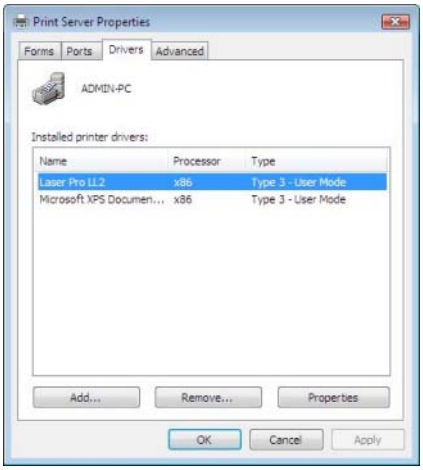

6 Select the option **REMOVE DRIVER AND DRIVER PACKAGE** and click on the **OK** button.

7 A confirmation screen appears. Click on the **YES** button to continue.
8 Click on the **DELETE** button to confirm the removal.

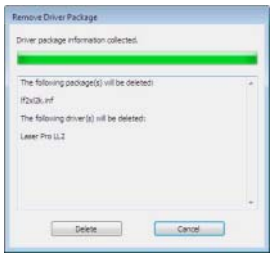

To remove scan and modem drivers:

1 Open the **DEVICE MANAGER** window (**START >CONTROL PANEL > SYSTEM > HARDWARE > DEVICE MANAGER or START >CONTROL PANEL > HARDWARE AND SOUND > DEVICE MANAGER**, depending on the operating system).

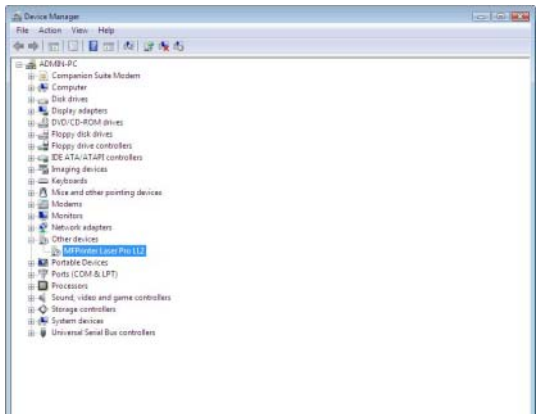

2 In the **OTHER DEVICES** sub-menu, select the **MF PRINTER LASER PRO LL2** item and click on the right button of the mouse.
3 Select **UNINSTALL** on the menu and left-click with the mouse.

4 Click on the **OK** button to confirm the removal.
5 In the **IMAGING DEVICES** sub-menu, select the **SCANNER PRO LL2** item and right-click with the mouse.
6 Select **UNINSTALL** on the menu and left-click with the mouse.
7 Click on the **OK** button to confirm the removal.

Maintenance

Service

General information

CAUTION	*For your safety, it is imperative to refer to the safety information presented in chapter* **Security,** *page 1.*

To ensure that your machine is kept in the best conditions, it is recommended that you periodically clean the inner parts.

Please respect the following rules while using this machine:

- *Do not leave the scanner cover open.*
- *Do not try to lubricate the device.*
- *Do not close the scanner cover violently or do not apply vibrations to the machine.*
- *Do not open the cartridge access cover while printing.*
- *Do not try to disassemble the machine.*
- *Do not use paper which has stayed in the tray for too long.*

Toner cartridge replacement

Three toner cartridge replacement procedures can be used depending on the ***TONER MANAGEMENT*** setting.

- ***TONER MANAGEMENT*** setting set to ***WITH [0-10%]*** *:* the replacement of the cartridge can be perfomed only when the message **Toner near end** is displayed. At the end of replacement, validation with the smart card is required.
- ***TONER MANAGEMENT*** setting set to ***WITH [0-100%]*** *:* the replacement of the cartridge can be perfomed at any time. At the end of replacement, validation with the smart card is required.
- ***TONER MANAGEMENT*** setting set to ***WITHOUT*** *:* the replacement of the cartridge can be perfomed at any time and no validation with the smart card is necessary. When set to **WITHOUT**, the screen displays **TONER ? %.**

To set the ***TONER MANAGEMENT*** setting, select ▼ **2979 - *SETUP* / *TECHNICALS* / *TONER MANAGEMENT*** and choose the setting**.**

CAUTION	*This procedure applies when the setting* ***TONER MANAGEMENT*** *is set to* ***WITH [0-10%]****.* *When set to With [0-100%], follow the procedure from step 2.* *When set to* ***WITHOUT****, follow the procedure from step 2 to step 7.*

Your machine comes with a current consumable management system. It tells you if your toner cartridge is close to its end of cycle. The following message will appear on your machine screen.

TONER NEAR END

To quit this screen, press **OK***.*

To replace the toner cartridge, proceed as shown below.

When the following message is displayed on the screen:

TONER EMPTY
REPLACE <OK>

1 Press **OK**.

OPEN FRONT COVER
REPLACE TONER

2 Stand in front of the device.
3 Push on the left and right sides of the cover and pull it towards you.
4 Raise and remove the toner cartridge from the machine.
5 Unpack the new cartridge and insert it into the slot as indicated in the diagram below.

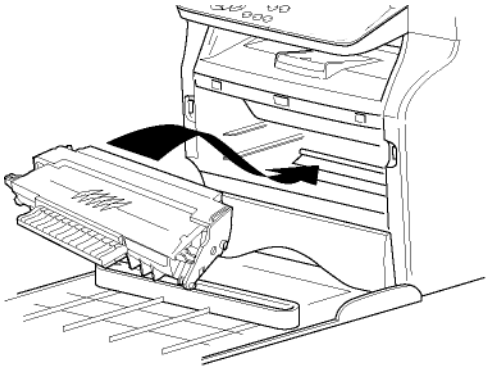

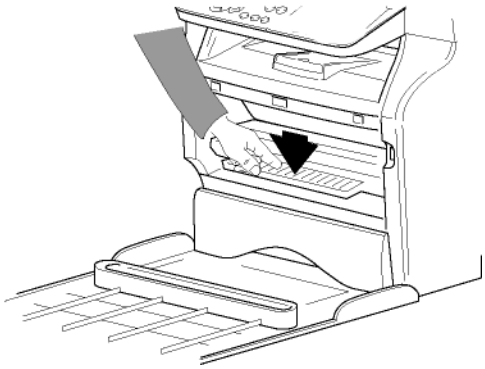

6 Close the cover.
The following message appears:

HAVE YOU CHANGED
THE TONER? <OK>

7 Press **OK**.

8 When this message appears,

INSERT THE
TONER CARD

insert the smart card provided with the new toner cartridge as shown on the picture below.

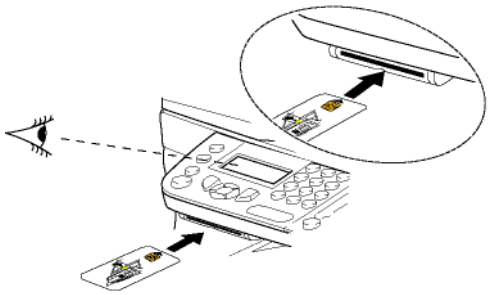

9 A wait message appears.

PLEASE
WAIT

The smart card is read.

NEW TONER
REMOVE CARD

Remove the smart card from the reader, your machine is ready to print again.

CAUTION

To** continue the printing of your documents when the message **TONER NEAR END is displayed, set the TONER MANAGEMENT** setting to **WITHOUT.
***Caution :** this procedure is not recommended as disabling toner management (parameter set to **WITHOUT**) can lead to fax loss and toner being spilled in your print mechanism.*

Issues with smart cards

If you use a smart card that has already been used, the machine will display:

PLEASE
WAIT

then,

REMOVE CARD
ALREADY USED

If you use a defective smart card, the machine will display:

PLEASE
WAIT

then,

UNKNOWN CARD
REMOVE CARD

If the **C** button is pressed while the smart card is being read, the machine displays:

ACTION CANCELLED
REMOVE CARD

Cleaning

Scanner reading system cleaning

When one or more vertical lines appear on the copies, clean the glass of the scanner.

1 Open the scanner cover until it is standing in vertical position.
2 Wipe the glass with a soft lint-free cloth soaked with mild alcohol.
3 Close the scanner cover.
4 Make a copy to check that the symptoms have disappeared.

Printer cleaning

Dust, dirtiness and paper debris on the external and internal surfaces of the printer can affect its operation. We advise that it is cleaned regularly.

Printer external cleaning

Clean the external part of the printer with a soft cloth soaked in mild detergent.

Printer issues

Error messages

When the printer encounters any of the problems described below, the corresponding message is shown on the machine display.

Message	Action
CHECK TONER	Check the presence of a toner cartridge in the machine.
TONER NEAR END	Indicates that your consumable will need changing soon.
REPLACE PAPER	Add paper in tray.
HEATING	Message displayed when starting the machine.
CLOSE COVER PRINTER	The printer front cover is open, close it.
TONER EMPTY REPLACE <OK>	Replace the toner cartridge.

Message	Action
PAPER JAM REMOVE TONER	A sheet of paper is jammed in the machine. Take out the toner cartridge and remove the jammed paper sheet. Take out the paper tray and remove the jammed paper sheet. Then open and close the Front cover.
PAPER JAM EXTERNAL TRAY	A sheet of paper is jammed in the machine. Open the paper jam cover. Remove the jammed paper sheet. Then open and close the Front cover.
PAPER EMPTY	Add paper in the paper tray.

Note *After one of the error messages listed above is displayed, it may happen that the active print job is cancelled (see* **PC printing issues,** page 40*).*

Paper jam

When printing, a sheet of paper may get stuck in the printer or the paper tray and cause a paper jam.

In case of a paper jam in the machine, the following message appears:

PAPER JAM
EXTERNAL TRAY

1 Open the paper jam cover located at the back of the machine.
2 Remove the jammed sheet of paper and close the cover.

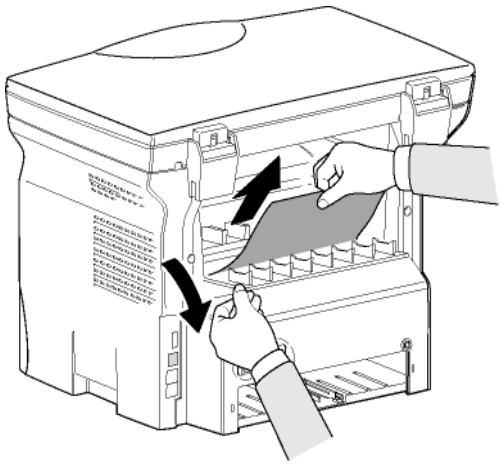

3 Open and close the Front cover.
The printer starts again automatically.

CAUTION *The fusion unit can reach a very high temperature during the operation. To prevent any harm, do not touch this area.*

For details, refer to **Positions of Warning and Caution labels on the machine,** *page 3.*

In case of paper jam, the following message appears:

PAPER JAM
REMOVE TONER

1 Remove the toner cartridge and check if a sheet is jammed.
2 Remove the sheet of paper which causes the paper jam.
3 Put the toner cartridge in the machine, or remove the paper tray and remove the sheet of paper which causes the paper jam.
4 Check that the paper sheets in the paper tray are correctly placed.

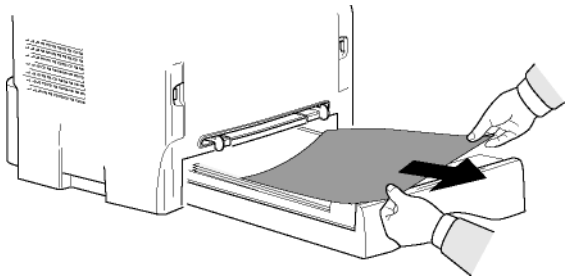

5 Replace the paper tray in the machine.

Miscellaneous issues

When turning on the terminal, nothing is displayed on the screen.

Check the connection between the power cord and the outlet.

PC printing issues

This section details how the machine handles a print request after having encountered an issue (paper jam, connection loss, etc.).

Refer to the sections below to know if the printing of your document will resume or will be cancelled, depending on the problem encountered during printing.

PC printing via USB connection

Issue encountered	Print request handling
Paper empty	Once the problem is resolved, printing resumes from the first non-printed page.
No paper feed	Once the problem is resolved, printing resumes from the first non-printed page. Exception: If the document was to be printed in manual duplex mode, the printing of the document is cancelled.
Paper jam	
Paper format problem	
Toner empty	The printing of the active document is cancelled. Documents waiting to be printed, however, will print after the toner cartridge is replaced.
Pause requested from the spooler	The machine switches to idle mode after a timeout (30 seconds by default). The printing of the active document is cancelled. Documents waiting to be printed, however, will be printed.
Loss of USB connection	Once the problem is resolved, the printing of the document restarts from the beginning, regardless of the number of pages already printed before the connection loss.

Firmware update

Updating the machine firmware requires that the Companion Suite Pro software be installed on your PC, and that the PC is connected to the machine (see **PC Features,** page 27).

Contact your Dealer to check if firmware updates are available for your machine.

Then, access the update utility (**START > ALL PROGRAMS > COMPANION SUITE > COMPANION SUITE PRO LL2 > COMPANION - FIRMWARE UPDATE**), select the downloaded file and launch the update.

Specifications

Physical specifications

Dimensions:	344 x 447 x 386 mm
Weight:	11.6 kg

Electrical specifications

Power supply (see rating plate):	Single phase 220-240 V - 50/60 Hz - 4.5 A
Electric consumption:	10 W typical in powersave 33 W typical in standby 450 W average during printing (900W peak)

Environmental specifications

Operating temperature:	10°C to 27°C [50°F to 80.6° F] with an ambient humidity included between 15 to 80% (up to 32°C [89.6°F] w ith an ambient humidity included between 15 to 54%)

Peripheral specifications

Printer

Type:	Laser (on normal paper)
Resolution:	600 dpi
Speed:	20 ppm maximum[a]
Preheating time:	21 sec.
First page out time:	13 sec.

a. Printing speed may vary depending on used operating systems, computer specifications, software applications, paper formats as well as file types and sizes.

Copier

Type:	Autonomous Black and White
Copy speed:	20 ppm maximum
Resolution:	600 dpi
Multiple copies:	99 pages maximum
Zoom range:	25 % to 400 %

Scanner

Type:	Colour scanner
Colour depth:	36 bits
Resolution:	600 dpi (optical) 2400 dpi (interpolated)
Software compatibility:	TWAIN, WIA
Maximum paper format:	Letter

Printing supports

Main paper tray capacity:	250 sheets maximum (60 g/m²), 200 sheets maximum (80 g/m²)
Output tray capacity:	50 sheets
Main tray paper format:	A4, A5, Legal, Letter 60 to 105 g/m² paper
Paper format for manual printing:	A4, A5, Legal, Letter, B5, exec, A6 52 to 160 g/m² paper

PC connection

Slave USB 2.0 port (PC connection)
Master USB 2.0 port (reader, USB memory key reader)
Operating System: Windows 2000 ≥ SP4, Windows XP x86 ≥ SP1, Windows Vista, Windows 2003 server (for printing only)

Specifications are subject to changes for improvement without notice.