Model Pro C901S (PLUS)/ Pro C901 (PLUS) Machine Code: D095/M077 Field Service Manual

3 December, 2012

Safety, Conventions, Trademarks

Conventions

Symbol	What it means
CT	Core Tech Manual
	Screw
	Connector
	E-ring
	C-ring
	Harness clamp

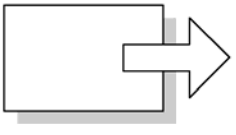

Short Edge Feed (SEF)

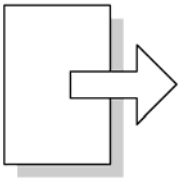

Long Edge Feed (LEF)

The notations "SEF" and "LEF" describe the direction of paper feed. The arrows indicate the direction of paper feed.

Warnings, Cautions, Notes

In this manual, the following important symbols and notations are used.

⚠WARNING

- A Warning indicates a potentially hazardous situation. Failure to obey a Warning could result in death or serious injury.

⚠CAUTION

- A Caution indicates a potentially hazardous situation. Failure to obey a Caution could result in minor or moderate injury or damage to the machine or other property.

Important

- Obey these guidelines to avoid problems such as misfeeds, damage to originals, loss of valuable data and to prevent damage to the machine

Note

- This information provides tips and advice about how to best service the machine.

Commonly Used Terms

In the SP tables, the finishers are referred to by number (1, 2, 3), and some devices that appear in the SP tables are not supported overseas:

Z-Fold	This refers to the Z-Folding unit.
ITB	Image Transfer Belt
PTR	Paper Transfer Roller
PTB	Paper Transport Belt

General Safety Instructions

For your safety, please read this manual carefully before you use this product. Keep this manual handy for future reference.

Safety Information

Always obey the following safety precautions when using this product.

Safety During Operation

In this manual, the following important symbols and notations are used.

Switches and Symbols

Where symbols are used on or near switches on machines for Europe and other areas, the meaning of each symbol conforms with IEC60417.

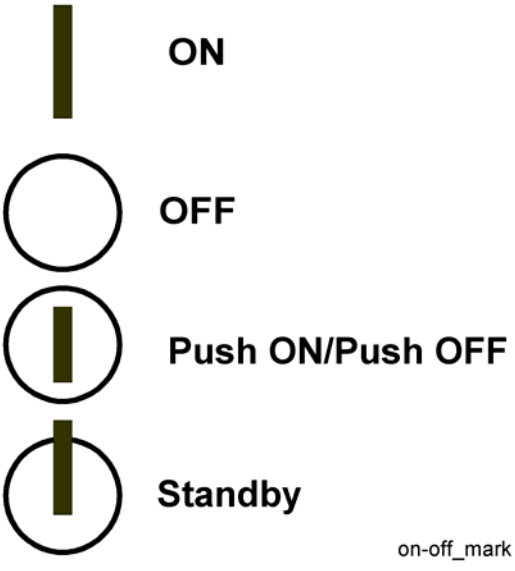

Responsibilities of the Customer Engineer

Customer Engineer

Maintenance shall be done only by trained customer engineers who have completed service training for the machine and all optional devices designed for use with the machine.

Reference Material for Maintenance

- Maintenance shall be done using the special tools and procedures prescribed for maintenance of the machine described in the reference materials (service manuals, technical bulletins, operating instructions, and safety guidelines for customer engineers).
- Use only consumable supplies and replacement parts designed for use of the machine.

Before Installation, Maintenance

Shipping and Moving the Machine

⚠CAUTION

- Work carefully when lifting or moving the machine. If the machine is heavy, two or more customer engineers may be required to prevent injuries (muscle strains, spinal injuries, etc.) or damage to the machine if it is dropped or tipped over.

- Personnel moving or working around the machine should always wear proper clothing and footwear. Never wear loose fitting clothing or accessories (neckties, loose sweaters, bracelets, etc.) or casual footwear (slippers, sandals, etc.) when lifting or moving the machine.
- Always unplug the power cord from the power source before you move the product. Before you move the product, arrange the power cord so it will not fall under the product.

Power

⚠WARNING

- Always disconnect the power plug before doing any maintenance procedure. After switching off the machine, power is still supplied to the main machine and other devices. To prevent electrical shock, switch the machine off, wait for a few seconds, then unplug the machine from the power source.
- Before you do any checks or adjustments after turning the machine off, work carefully to avoid injury. After removing covers or opening the machine to do checks or adjustments, never touch electrical components or moving parts (gears, timing belts, etc.).
- After turning the machine on with any cover removed, keep your hands away from electrical components and moving parts. Never touch the cover of the fusing unit, gears, timing belts, etc.

Installation, Disassembly, and Adjustments

⚠CAUTION

- After installation, maintenance, or adjustment, always check the operation of the machine to make sure that it is operating normally. This ensures that all shipping materials, protective materials, wires and tags, metal brackets, etc., removed for installation, have been removed and that no tools remain inside the machine. This also ensures that all release interlock switches have been restored to normal operation.
- Never use your fingers to check moving parts causing spurious noise. Never use your fingers to lubricate moving parts while the machine is operating.
- An excessive amount of ozone can build up around machines. Make sure the room where the machine is to be installed is well ventilated and spacious. Good ventilation is especially important when the machine is used heavily.
- To avoid possible build-up of ozone, locate this machine in a large well ventilated room that has an air turnover of more than 30m3/hr/person.

Special Tools

⚠CAUTION

- Use only standard tools approved for machine maintenance.

- For special adjustments, use only the special tools and lubricants described in the service manual. Using tools incorrectly, or using tools that could damage parts, could damage the machine or cause injuries.

During Maintenance

General

⚠CAUTION

- Before you begin a maintenance procedure:
- 1. Switch the machine off.
- 2. Disconnect the all power plugs from the power source.
- 3. Allow the machine to cool for at least 10 minutes.
- Avoid touching the components inside the machine that are labeled as hot surfaces.

Safety Devices

⚠WARNING

- Never remove any safety device unless it requires replacement. Always replace safety devices immediately.
- Never do any procedure that defeats the function of any safety device. Modification or removal of a safety device (fuse, switch, etc.) could lead to a fire and personal injury. Always test the operation of the machine to ensure that it is operating normally and safely after removal and replacement of any safety device.
- For replacements, use only the correct fuses or circuit breakers rated for use with the machine. Using replacement devices not designed for use with the machine could lead to a fire and personal injuries.

Organic Cleaners

⚠CAUTION

- During preventive maintenance, never use any organic cleaners (alcohol, etc.) other than those described in the service manual.
- Make sure the room is well ventilated before using any organic cleaner. Use organic solvents in small amounts to avoid breathing the fumes and becoming nauseous.
- Switch the machine off, unplug it, and allow it to cool before doing preventive maintenance. To avoid fire or explosion, never use an organic cleaner near any part that generates heat.

- Wash your hands thoroughly after cleaning parts with an organic cleaner to contamination of food, drinks, etc. which could cause illness.
- Clean the floor completely after accidental spillage of silicone oil or other materials to prevent slippery surfaces that could cause accidents leading to hand or leg injuries. Use dry rags to soak up spills.

Batteries

⚠WARNING

- Always replace a battery with the same type of battery prescribed for use. Replacing a battery with any type other than the one prescribed for use could lead to an explosion.
- Never discard used batteries by mixing them with other trash. Remove them from the work site and dispose of them in accordance with local laws and regulations regarding the disposal of such items.

Ozone Filters

⚠CAUTION

- Always replace ozone filters as soon as their service life expires (as described in the service manual).
- An excessive amount of ozone can build up around machines that use ozone filters if they are not replaced at the prescribed time. Excessive ozone could cause personnel working around the machine to feel unwell.

Power Plug and Power Cord

⚠WARNING

- Always disconnect the all power plugs for the mainframe and other peripherals before doing any maintenance procedure. After switching off the machine, power is still supplied to the main machine and other devices. To prevent electrical shock, switch the machine off, wait for a few seconds, then unplug the machine from the power source.
- Always check the power plug and make sure that it is free of dust and lint. Clean it if necessary. A dirty plug can generate heat which could cause a fire.
- Inspect the length of the power cord for cuts or other damage. Replace the power cord if necessary. A frayed or otherwise damaged power cord can cause a short circuit which could lead to a fire or personal injury from electrical shock.
- Check the length of the power cord between the machine and power supply. Make sure the power cord is not coiled or wrapped around any object such as a table leg. Coiling the power cord can cause excessive heat to build up and could cause a fire.

- Make sure that the area around the power source is free of obstacles so the power cord can be removed quickly in case of an emergency.
- Make sure that the power cord is grounded (earthed) at the power source with the ground wire on the plug.
- Connect the power cord directly into the power source. Never use an extension cord.
- When you disconnect the power plug from the power source, always pull on the plug, not the cable.

After Installation, Servicing

Disposal of Used Items

⚠WARNING

- Never incinerate used toner or toner cartridges.
- Toner or toner cartridges thrown into a fire can ignite or explode and cause serious injury. At the work site, always carefully wrap used toner and toner cartridges with plastic bags to avoid spillage before disposal or removal.

⚠CAUTION

- Always dispose of used items (developer, toner, toner cartridges, OPC drums, etc.) in accordance with the local laws and regulations regarding the disposal of such items.
- To protect the environment, never dispose of this product or any kind of waste from consumables at a household waste collection point. Dispose of these items at one of our dealers or at an authorized collection site.
- Return used selenium drums to the service center for handling in accordance with company policy regarding the recycling or disposal of such items.

Points to Confirm with Operators

At the end of installation or a service call, instruct the user about use of the machine. Emphasize the following points.

- Show operators how to remove jammed paper and troubleshoot other minor problems by following the procedures described in the operating instructions.
- Point out the parts inside the machine that should never be touched or attempted to remove.
- Confirm that operators know how to store and dispose of consumables.
- Make sure that all operators have access to an operating instruction manual for the machine.
- Confirm that operators have read and understood all the safety instructions described in the operating instructions.

- Demonstrate how to turn off the power and disconnect the power plug (by pulling the plug, not the cord) if any of the following events occur:

  1) Something has spilled into the product.

  2) Service or repair of the product is necessary.

  3) The product cover has been damaged.
- Caution operators about removing paper fasteners around the machine. They should never allow paper clips, staples, or any other small metallic objects to fall into the machine.

Special Safety Instructions for Toner

Accidental Physical Exposure

⚠CAUTION

- Work carefully when removing paper jams or replacing toner bottles or cartridges to avoid spilling toner on clothing or the hands.
- If toner is inhaled, immediately gargle with large amounts of cold water and move to a well ventilated location. If there are signs of irritation or other problems, seek medical attention.
- If toner gets on the skin, wash immediately with soap and cold running water.
- If toner gets into the eyes, flush the eyes with cold running water or eye wash. If there are signs of irritation or other problems, seek medical attention.
- If toner is swallowed, drink a large amount of cold water to dilute the ingested toner. If there are signs of any problem, seek medical attention.
- If toner spills on clothing, wash the affected area immediately with soap and cold water. Never use hot water! Hot water can cause toner to set and permanently stain fabric.

Handling and Storing Toner

⚠WARNING

- Toner, used toner, and developer are extremely flammable.
- Never store toner, developer, toner cartridges, or toner bottles (including empty toner bottles or cartridges) in a location where they will be exposed to high temperature or an open flame.
- Do not use the cleaner to suck spilled toner (including used toner). Sucked toner may cause firing or explosion due to electrical contact flickering inside the cleaner.However, it is possible to use the cleaner designed for dust explosion-proof purpose. If toner is spilled over the floor, sweep up spilled toner slowly and clean remainder with wet cloth.

⚠CAUTION

- Always store toner and developer supplies such as toner and developer packages, cartridges, and bottles (including used toner and empty bottles and cartridges) out of the reach of children.
- Always store fresh toner supplies or empty bottles or cartridges in a cool, dry location that is not exposed to direct sunlight.

Toner Disposal

⚠WARNING

- Never attempt to incinerate toner, used toner, or empty toner containers (bottles or cartridges). Burning toner can explode and scatter, causing serious burns.
- Always wrap used toner and empty toner bottles and cartridges in plastic bags to avoid spillage. Follow the local laws and regulations regarding the disposal of such items.
- Dispose of used toner and toner cartridges at one of our dealers or at an authorized collection site. Always dispose of used toner cartridges and toner bottles in accordance with the local laws and regulations regarding the disposal of such items.

Safety Instructions for this Machine

Prevention of Physical Injury

1. Before disassembling or assembling parts of the machine and peripherals, make sure that the machine and peripheral power cords are unplugged.
2. The plug should be near the machine and easily accessible.
3. Note that some components of the machine and the paper tray unit are supplied with electrical voltage even if the main power switch is turned off.
4. If any adjustment or operation check has to be made with exterior covers off or open while the main switch is turned on, keep hands away from electrified or mechanically driven components.
5. If the [Start] key is pressed before the machine completes the warm-up period (the [Start] key starts blinking red and green), keep hands away from the mechanical and the electrical components as the machine starts making copies as soon as the warm-up period is completed.
6. The inside and the metal parts of the fusing unit become extremely hot while the machine is operating. Be careful to avoid touching those components with your bare hands.
7. Keep the machine away from flammable liquids, gases, and aerosols. A fire or an explosion might occur.

Health Safety Conditions

1. Never operate the machine without the ozone filters installed.
2. Always replace the ozone filters with the specified types at the proper intervals.
3. Toner and developer are non-toxic, but if you get either of them in your eyes by accident, it may cause temporary eye discomfort. Try to remove with eye drops or flush with water as first aid. If unsuccessful, get medical attention.

Observance of Electrical Safety Standards

1. The machine and its peripherals must be installed and maintained by a customer service representative who has completed the training course on those models.
2. The NVRAM on the system control board has a lithium battery which can explode if replaced incorrectly. Replace the NVRAM only with an identical one. The manufacturer recommends replacing the entire NVRAM. Do not recharge or burn this battery. Used NVRAM must be handled in accordance with local regulations.

Safety and Ecological Notes for Disposal

1. Do not incinerate toner bottles or used toner. Toner dust may ignite suddenly when exposed to an open flame.
2. Dispose of used toner, developer, and organic photoconductors in accordance with local regulations. (These are non-toxic supplies.)
3. Dispose of replaced parts in accordance with local regulations.
4. When keeping used lithium batteries in order to dispose of them later, do not put more than 100 batteries per sealed box. Storing larger numbers or not sealing them apart may lead to chemical reactions and heat build-up.

⚠CAUTION

- The danger of explosion exists if a battery of this type is incorrectly replaced.
- Replace only with the same or an equivalent type recommended by the manufacturer. Discard used batteries in accordance with the manufacturer's instructions.

Laser Safety

The Center for Devices and Radiological Health (CDRH) prohibits the repair of laser-based optical units in the field. The optical housing unit can only be repaired in a factory or at a location with the requisite equipment. The laser subsystem is replaceable in the field by a qualified Customer Engineer. The laser chassis is not repairable in the field. Customer engineers are therefore directed to return all chassis and laser subsystems to the factory or service depot when replacement of the optical subsystem is required.

⚠WARNING

- Use of controls, or adjustment, or performance of procedures other than those specified in this manual may result in hazardous radiation exposure.
- Turn off the main switch before attempting any of the procedures in the Laser Unit section. Laser beams can seriously damage your eyes.

laser_decal-3b

laser_decal-3b-small

Trademarks

- Microsoft®, Windows®, and MS-DOS® are registered trademarks of Microsoft Corporation in the United States and /or other countries.
- PostScript® is a registered trademark of Adobe Systems, Incorporated.
- PCL® is a registered trademark of Hewlett-Packard Company.
- Ethernet® is a registered trademark of Xerox Corporation.
- PowerPC® is a registered trademark of International Business Machines Corporation.
- Other product names used herein are for identification purposes only and may be trademarks of their respective companies. We disclaim any and all rights involved with those marks.

Safety Instructions for Fiery Controller

Fuse Caution

This controller uses a double pole fuse. Be careful when you do maintenance on the Fiery Controller after the fuse circuit has been opened.

⚠CAUTION

- Double Pole/ Neutral Fusing

Batteries

⚠WARNING:

- Always replace a battery with the same type of battery prescribed for use. Replacing a battery with any type other than the one prescribed for use could lead to an explosion.
- Never discard used batteries by mixing them with other trash. Remove them from the work site and dispose of them in accordance with local laws and regulations regarding the disposal of such items.

TABLE OF CONTENTS

Safety, Conventions, Trademarks....1
- Conventions....1
- Warnings, Cautions, Notes....1
- Commonly Used Terms....2
- General Safety Instructions....2
- Responsibilities of the Customer Engineer....3
  - Customer Engineer....3
  - Reference Material for Maintenance....3
- Before Installation, Maintenance....3
  - Shipping and Moving the Machine....3
  - Power....4
  - Installation, Disassembly, and Adjustments....4
  - Special Tools....4
- During Maintenance....5
  - General....5
  - Safety Devices....5
  - Organic Cleaners....5
  - Batteries....6
  - Ozone Filters....6
  - Power Plug and Power Cord....6
- After Installation, Servicing....7
  - Disposal of Used Items....7
  - Points to Confirm with Operators....7
- Special Safety Instructions for Toner....8
  - Accidental Physical Exposure....8
  - Handling and Storing Toner....8
  - Toner Disposal....9
- Safety Instructions for this Machine....9
  - Prevention of Physical Injury....9
  - Health Safety Conditions....10
  - Observance of Electrical Safety Standards....10
  - Safety and Ecological Notes for Disposal....10
  - Laser Safety....10

Trademarks....11
Safety Instructions for Fiery Controller....11
Fuse Caution....11
Batteries....11

1. Product Information

Specifications....39
Machine Configuration....40
Printer M077....40
Copier D095....42
Overview....44
Machine Layout....44
Paper Path....45
Printer (M077) model....45
Copier (D095) model....46
Fan Location....47
Guidance for Those Who are Familiar with Predecessor Products....50

2. Installation

Installation Requirements....51
Operating Environment....51
Machine Level....52
Minimum Space Requirements....53
Dimensions....54
Side View with Finisher SR5000 (B830) or SR5020 (D434)....54
Side View with Ring Binder RB5000 (D392)....55
Side View with Perfect Binder GB5000 (D391)....56
Side View with High Capacity Stacker SK5000 (D364)....56
Power Requirements....57
Input voltage level....57
Required Breaker....57
Main Power Switch....58
Operation Switch....58
Correct Procedure to Turn Off the Power....58
Shut the Fiery Controller Down First....58

Then Shut Down the Machine....59
Before You Begin....60
Overview of Optional Peripherals....60
Optional Peripherals Configuration for Printer M077....60
Optional Peripherals Configuration for Copier D095....62
Mainframe....65
Accessories....65
Installation....69
Rating Voltage for Peripherals....69
External Tape and Packing Material....70
Leveling the Mainframe....71
Internal Tape and Packing Material....73
Install the Toner Bottles....75
Installing the Operation Panel Unit....76
Keytop Adjustment....77
Attaching the Ground Plate....78
Installing the Attention Light....79
Connecting the Upper and Lower Tray Heaters....79
Connecting the LCT-MF **(D095 only)**....81
Testing the Breaker Switch and Attaching the Caution Decal....92
Connecting to the Controller....93
Turn on the Machine Power....95
Controller Selection....95
Fiery Language Selection....95
Fiery Controller Settings....95
Paper Library Data....99
TCRU Setting....100
Load the Paper Trays....100
Print an SMC Report....101
Checking the Print Quality....101
Make a Test Color Print **(D095 only)**....104
ACC (Automatic Color Calibration) Adjustment **(D095 only)**....105
Color Registration Procedure for MUSIC....106

Rear Controller Box Removal....106
Rear Controller Box Removal....106
A3/11"x17" Tray Unit TK5000 (B331)....111
Accessories....111
Installation....111
Ring Binder (D392) Installation....116
Accessories....116
Before You Begin....117
Installation Procedure....118
Remove All Shipping Materials....118
Prepare the Finisher for Docking....120
Prepare the Mainframe or other peripheral for Docking....121
Dock the Finisher to the Upstream Unit....122
Install the Shoes and Level the Finisher....125
Peripheral Height Adjustment....125
Attach Ring Supply Level Indicator....126
Test the Breaker Switch....127
Centering Paper in the Paper Path....128
Checking and Correcting Side-to-Side Registration....128
Checking and Correcting Skew....131
After Installation....134
Perfect Binder (D391) Installation....136
Docking the Perfect Binder....136
Before Docking....136
Docking Procedure....137
Peripheral Height Adjustment....140
Filling Bookbinder Glue Supply Unit....141
Handling and Storing the Glue Pellet Supply....143
Testing the Breaker Switch....143
High Capacity Stacker SK5010 (D447)....145
Accessories....145
Installation....146
Shipping Tapes....147

Paper Guide, Sponge Strip, Ground Plate....148
Docking....149
Lock Hasps....152
Height Adjustment....152
Power Cord, Breaker Switch Test....154
Check for Skew and Correct Side-to-Side Registration....154
Docking: Downstream....155
Roll-Away Cart (D456)....156
Bridge Unit BU5000 (D379)....158
Accessory Check....158
Installation....159
Horizontal Bridge Unit....160
Vertical Bridge Unit....165
LCIT RT5050 (D532)....170
Accessory Check....170
Installation Procedure for Printer (M077)....171
Naming for double LCT units....171
Preparing for Installation....172
Installation for only one LCT unit....173
Installation for two LCT units....178
Installation Procedure for Copier (D095)....184
Preparing for Installation....184
Installation for two LCT units....185
LCIT RT5030 (D452)....191
Accessories....191
Installation....192
Tapes, Retainers....192
Docking....193
Height Adjustment....195
Image Position Sensor, Paper Registration Adjustment....195
LCIT (D452) Tray Heaters....195
Accessories....195
Installation....197

Multi Bypass Tray (B833)....200
Accessories....200
Installation....200
Cover Interposer Tray CI5010 (B835)....205
Accessories....205
Installation....206
Setting up the Unit and Docking to the Mainframe....206
Docking the Next Peripheral Device....211
Mounting the Tray Unit....212
Peripheral Height Adjustment....214
Docking the Cover Interposer Tray B835....215
Z-Fold Unit B660 to Cover Interposer Tray B835....216
Finisher B830 to Cover Interposer Tray B835....217
Firmware Update....217
Z-Folding Unit ZF4000 (B660)....218
Accessory Check....218
Installation....219
Unpacking....220
Attaching the Brackets....221
Preparing for Docking....222
Testing the Breaker....224
Docking the Z-Folding Unit to the Cover Interposer Tray or Mainframe....224
Connecting the Z-Folding Unit B660....227
Connecting the Peripheral to the Z-Folding Unit B660....228
Booklet Finisher SR5020 (D434)....230
Accessories....230
Installation....231
Tapes, Retainers, Shipping Plates....231
Ground Plate, Sponge Strip....234
Booklet Tray, Shift Tray....236
Docking....236
Height Adjustment....238
Power Cord, Breaker Switch Test....240

Auxiliary Trays....240
Check for Skew and Correct Side-to-Side Registration....241
Punch Unit PU5020 NA, EU, SC (D449-17, -27, -28)....242
Accessories....242
Installation....243
Trimmer Unit TR5020 (D455)....253
Accessories....253
Installation....254
Tapes, Stopper Plate....254
Output Tray....255
Ground Plate....256
Preparing the Booklet Finisher (D434) for Docking....256
Docking....258
Finisher SR5000 (B830)....260
Accessories....260
Finisher SR5000 B830 Accessories....260
Finisher Installation....261
Removing tape and shipping retainers....262
Preparing before Docking....263
Docking the Finisher B830....266
Connecting the Finisher B830....268
Peripheral Height Adjustment....270
Support Tray....270
Punch Unit PU5000 (B831)....271
Accessories....271
Installation....272
Cooling Fan Unit Type 5000 (B831)....277
Component Check....277
Installation Procedure....277
Buffer Pass Unit Type 5000 (M379)....283
Accessory Check....283
Installation....284
Unpacking....284

Preparing for Docking....285
Docking the Buffer Pass Unit to the Mainframe....285
Removing the Shipping Brackets....288
Connecting the Other Peripheral to the Buffer Pass Unit....289
Fuser Unit Air Separator Type C901 (M390)....291
Accessory Check....291
Installation....292
Before Installation....292
Installation Procedure....292
Skew and Side-to-Side Adjustment....302
Skew and Side-to-Side Registration....302
Overview....302
Checking Side-to-Side Registration....306
Correcting Side-to-Side Registration....307
Detecting Paper Skew....309
Correcting Skew....310
Optional Counter Interface Unit Type A (B870)....314
Component List....314
Installation....314
MFP Option....318
VM Card Type F (D377-04): D095 only....318
Installation Procedure....318

3. Preventive Maintenance

PM Counter....319
Initializing PM Parts....319
Displaying the PM Counter....320
PM Parts Screen Details....321
All PM Parts list: Main Menu....321
Number button submenu....322
Parts list for PM yield indicator....323
PM Tables....324

4. Replacement and Adjustment

General Cautions....325

Rear Controller Box 325
Drum....325
PCDU....326
Image Transfer Belt Unit....326
Scanner Unit (D095 only)....326
Laser Unit....326
Development....326
Cleaning....327
Fusing Unit....327
Paper Feed....327
Waste Toner....327
Fiery Controller....328
Special Tools and Lubricants....329
Special Tools....329
Lubricants....329
Image Adjustment....330
Scanning (D095 only)....330
Scanner sub-scan magnification....330
Scanner leading edge and side-to-side registration....330
ADF (D095 only)....331
ADF side-to-side and leading edge registration....331
Color Image Check....332
Checking Procedure....332
Recovery Procedure....333
Color Registration Check....333
Checking Procedure for Printer (M077) model....333
Checking Procedure for Copier (D095) model....333
Recovery Procedure....334
Ruled Line Check....334
Checking Procedure for Printer (M077)....334
Checking Procedure for Copier (D095) model....335
Recovery Procedure....336
Image Shift Check between the 1st and 2nd Pages....336

Checking Procedure....336
Adjustment Procedure....339
Adjustable User SP List....340
Image Skew Check....340
Checking Procedure....340
Adjustment Procedure....341
Exterior Covers....343
Front Door....343
Left Front Door....343
Right Front Door....343
Left Cover....344
Right Cover....345
Front Top Cover....345
Rear Top Cover....346
Rear Upper and Lower Covers....347
Rear Upper Cover....347
Rear Lower Right Cover....347
Rear Lower Left Cover....347
Operation Panel Arm....348
Operation Panel....349
OPU....350
Main Key, Sub Key and Application Key Board, and LCD Unit....351
When reinstalling the application key board....352
Inverter Fuse....353
Touch Panel Position Adjustment....353
Rear Controller Box....354
Opening the rear controller box....354
Detaching the rear controller box....355
Laser Unit....358
Caution Decals....358
View from the top of the printer....358
View from the rear of the printer....360
LD Safety Switches....362

Laser Unit 363
Reinstallation....364
Polygon Motor....369
Polygon Motor Drive Board....370
LD Units....372
When installing a new LD unit....374
Laser Synchronizing Detector....377
Toner Hopper....379
Toner Bottles....379
Cleaning Requirement 379
Toner Hopper Cover....380
Toner Hopper Door Switch....381
RFID Board....382
Toner Bottle Motor....383
Lubricating the toner bottle motor gears....384
Sub-Hopper Unit....386
Lubrication for the sub-hopper gears....388
After installing new sub-hopper unit....390
Toner Supply Clutch....390
Toner Pump Clutch....392
Toner End Sensor....392
Toner Supply Motor....393
Waste Toner Transport Motor 1....394
Waste Toner Transport Motor 2 and Sensor....395
Image Creation....397
Charge Corona Unit....397
After installing a new charge corona unit....397
Drum Cleaning Unit....397
Cleaning Requirement at PM Replacement....401
When installing a new drum cleaning unit....401
After installing a new drum cleaning unit....402
Drum Lubricant Blade....402
After installing a new drum lubricant blade....402

Drum Cleaning Gears....402
After installing new drum cleaning gears....403
Drum Lubricant Bar and Drum Lubricant Brush Roller....403
After installing a new drum lubricant bar and drum lubricant brush roller....405
Drum Cleaning Blade....405
After installing a new drum cleaning blade....406
Drum Cleaning Brush Roller....406
After installing a new drum cleaning brush roller....407
Drum Unit....407
Reassembling the Drum Unit....408
Cleaning Requirement at PM Replacement....409
After installing a new drum unit....410
Lubricating the Drum....410
Reinstallation....411
Quenching Lamp....411
Drum Motor....411
Drum Cleaning Motor....412
Drum Potential Sensor....413
Cleaning Requirement....415
Potential Sensor HVPS....415
Dust Shield Glass....416
When reinstalling the dust shield glass....417
Erase Lamp Shield Glass....417
Cleaning Requirement....418
Development Unit....418
Before removal....418
Removal procedure....419
Reassembling the Development Unit....420
After installing the new development unit....421
Developer....421
Removal....421
Installation....425
If the developer removal or installation fails....428

TD Sensor....428
After installing a new TD sensor....429
Development Motor....430
Development Fan....430
Charge Cleaning Motor....431
Image Transfer....432
ITB (Image Transfer Belt) Unit Drawer....432
Normal Slide-out Position....432
Full Slide-out Position....433
ITB Cleaning Unit....434
ITB Lubrication....436
After installing a new ITB cleaning unit....437
ITB Fan Cleaning Procedure....437
ITB Cleaning and ITB Lubricant Blades....437
After installing a new ITB cleaning blade....438
ITB Lubricant Brush Roller and Lubricant Bar....438
After installing a new ITB lubricant brush roller or ITB lubricant bar....439
ITB Cleaning Brush Roller....439
After installing a new ITB cleaning brush roller....440
Image Transfer Belt....440
When installing a new image transfer belt....443
After installing a new image transfer belt....444
ID/MUSIC Sensors....444
After installing new ID/MUSIC sensors....445
ITB Drive Motor....445
ITB Motor Rotation Sensors....445
Reinstalling the ITB motor rotation sensors....447
Belt Speed Sensor....447
When reinstalling the encoder roller with the encoder unit....449
ITB Black and Color Lift Motors....449
ITB Black and Color Lift Sensors....451
Front and Rear Belt Overrun Sensors....451
Belt Centering Sensor....452

Image Transfer Rollers 454
After installing new image transfer rollers....455
ITB Bias Roller....455
After installing a new ITB bias roller....456
ITB Cleaning Motor....457
ITB Cleaning Unit Set Sensor....457
Belt Centering Roller Sensor....458
Belt Centering Roller Motor....459
TRB (Transfer Relay Board)....459
Transfer HVPS....461
Paper Registration 463
Registration Unit Drawer....463
Pulling out the registration unit drawer....463
Removing the registration unit drawer....463
Reinstalling the registration unit drawer 464
Inner Registration Cover....465
LCT Entrance Sensor....465
Registration Timing Sensor....466
Registration Entrance Sensor....467
Double-Feed Sensor....468
Double-Feed Sensor: Receptor 468
Double-Feed Sensor: LED....469
CIS (Contact Image Sensor) Unit....470
After installing a new CIS unit....472
Paper Dust Tray....473
Cleaning Requirement....473
Shift Roller Unit....474
Shift Roller Unit Motor....476
Shift Roller HP Sensor....478
Registration Gate Lift Sensor....478
PTR Timing Sensor....479
Registration Timing Motor....480
Registration Gate Motor....481

Registration Entrance Motor....482
Shift Roller Motor....484
Duplex Transport Motor 2....485
PTR Timing Motor....487
Duplex Transport Sensor 3 and 4....489
Duplex Transport Sensor 3....489
Duplex Transport Sensor 4....489
PTR Motor....490
Separation HVPS....491
PTR Lift Motor....493
PTR Lift Sensor....494
RCB....494
Paper Transfer....496
PTR (Paper Transfer Roller) Unit....496
After installing a new paper transfer roller unit....497
PTR Entrance Mylar Cleaning Procedure....497
Cleaning Requirement....497
PTR Lubricant Bar....497
After installing a new PTR lubricant bar....498
PTR Lubricant Brush Roller....498
After installing a new PTR lubricant brush roller....499
PTR Discharge Plate....499
After installing a new PTR discharge plate....500
Paper Transfer Roller....500
After installing a new paper transfer roller....501
PTR Cleaning Blade....501
After installing a new PTR cleaning blade....502
PTR Cleaning Brush Roller....502
After installing a new PTR cleaning brush roller....503
Paper Feed and Transport....504
Tandem Tray (Tray 1)....504
When reinstalling the right tandem tray....505
Universal Tray (Tray 2)....506

Paper Feed Unit 1 and 2....506
Pick-up, Feed and Separation Rollers....508
Paper Feed, Paper End, Tray Lift Sensor....508
Rear Fence Return Sensor....509
Rear Fence HP Sensor....510
Right Tray Paper Sensor....510
Bottom Plate Lift Wire....512
Re-installation....513
2nd Tray Paper Size Switch....513
Paper Feed and Grip Motors....514
1st Paper Feed and Grip Motor....514
2nd Paper Feed and Grip Motor....516
Vertical Relay Motor....517
Tray Lift Motors....518
1st tray Lift Motor....518
2nd tray Lift Motor....518
Fusing....520
Fusing Unit....520
When reinstalling the fusing unit....522
After installing a new fusing unit....522
Fusing Unit Drawer....523
Pulling out the fusing unit drawer....523
Removing the fusing unit drawer....523
Fusing Front Cover....524
Fusing Rear Cover....525
Fusing Upper Frame....525
Fusing Cleaning Unit....527
After installing a new fusing cleaning unit....528
Cleaning Web....528
When reinstalling the cleaning web....531
Fusing Lamps....533
Heating Roller Fusing Lamps....533
Pressure Roller Fusing Lamp....536

When reinstalling the fusing lamps....539
Fusing Belt Stripper Plate....539
Parts in the Fusing Belt Assembly....540
Fusing Belt Assembly....540
Fusing Belt Tension Roller....543
Hot Roller Gear....544
Fusing Belt....544
Hot Roller and Heating Roller....545
Fusing Belt Tension Roller Bushing....546
Heating Roller Thermistor....546
After installing a new heating roller thermistor....547
Heating Roller Thermostat....547
Pressure Roller Stripper Pawl Unit....549
After installing a new pressure roller stripper pawl unit....550
Accordion Jam Sensor....551
Fusing Exit Front, Center and Rear Sensor....551
Fusing Exit Front Sensor....551
Fusing Exit Center Sensor....552
Fusing Exit Rear Sensor....552
Front and Rear Pressure Roller HP Sensors....553
Pressure Roller....555
After installing a new pressure roller....556
Pressure Roller Thermostat....556
Hot Roller Thermistor....558
Fusing Belt Thermistor....558
Cleaning Web Motor and Cleaning Web End Sensor....559
Fusing Motor....561
Pressure Roller Lift Motor....563
Paper Transport and Exit....564
PTB (Paper Transport Belt) Unit....564
Paper Transport Belt....564
PTB Motor....565
PTB Jam Sensor....566

PTB Fan 1 and 2....566
Paper Exit Motor....567
Paper Exit Sensor....569
Exit Junction Timing Sensor....570
Inverter Motor....571
Inverter Motor Fan....572
Duplex Transport Motor 1....573
Switchback Motor....574
Duplex Transport Sensor 1 and 2....575
Duplex transport sensor 1....575
Duplex transport sensor 2....576
Switchback Sensor....577
Switchback Lower Sensor....578
PTR Unit Cooling Fan....579
PDB (Paper exit Drive Board)....579
Paper Exit Transport Motor....580
De-curler Unit....581
After installing a new de-curler unit....582
De-curler Unit Motor....582
De-curler Feed Motor....583
De-curler Unit HP and Limit Sensor....584
Electrical Components....585
Board Location....585
IOB 1 and 2....586
IOB 1....586
IOB 2....586
IOB Brackets....587
Opening out the IOB 1 Bracket....587
Opening out the IOB 2 Bracket....588
BCU....589
When reinstalling the BCU....590
When installing a new BCU....590
AC Drive Board....590

FIB (Finisher Interface Board) and RB (Relay Board)....591
PSU-G....592
CGB HVPS....594
Controller NVRAM and DIMM....595
Before Controller NVRAM Removal....595
Removal Procedure for Controller NVRAM....595
After New NVRAM Installation....596
Controller Board....597
HDD....600
When installing new HDDs....601
Disposal of HDDs....602
IPU....602
PSU-C....603
Controller Fans....604
Controller Fans 1 and 2....604
Controller Fans 3 and 4....604
PSU-EA1, EA2 and -EB....605
Fiery Controller....607
Fiery Controller Left and Right Cover....607
Fiery Controller Front Cover....608
Fiery Controller Top Cover and Operation Panel Board....608
Video Board....610
Fiery Controller Mother Board, DIMM and CPU....611
When reassembling....613
Fiery Controller PSU....613
HDD Unit....614
DVD Drive....615
Fiery Controller Front Fan....616
Others....617
Dust Filters....617
After installing a new dust filter....618
Development Filter....618
Cleaning Requirement....618

PSU Filter....618
Cleaning Requirement....619
Controller Filter....619
Cleaning Requirement....619
Ozone Filters....620
After installing new ozone filters....620
Document Feeder (D095 only)....621
ADF Unit....621
ADF Covers....622
ADF Original Tray....623
Original Tray....623
Original Table Cover....623
Bottom Plate....623
Feed Unit and Separation Roller....624
Feed Belt....625
Pick-Up Roller....626
ADF Sensors....627
Entrance Sensor and Length Sensor....627
Registration Sensor....628
Width Sensors....629
Exit Sensor, Inverter Sensor....630
Transport Belt....631
ADF Motors....632
Bottom Plate Motor, Pick-up Motor....632
Feed-in, Transport, Feed-out Motors....633
Feed-In Clutch....634
Scanner Unit (D095 only)....636
Exposure Glass....636
Optics Dust Filter....637
Top Front Cover....637
Top Left Cover....638
Top Right Cover....639
Top Rear Cover....639

Lens Block....640
Original Size Sensors....641
Exposure Lamps....642
Lamp Regulators....643
Scanner HP Sensor....644
Scanner Motor....644
Scanner Drive Wires....645
Preparation....645
Front, Rear Scanner Drive Wires....646
Reinstallation....647
MCU (Motor Control Unit)....648
SIB (Scanner Interface Board)....649
LCT-MF (D095 only)....651
Covers....651
Inner Covers....651
Side Registration Adjustment....652
Trays....653
Side Fence....654
Front Side Fence....654
Rear Side Fence....655
Side Fence Blower....656
Front Side Fence Blower....656
Rear Side Fence Blower....656
LCT Paper Length Sensor....657
Paper Feed Unit....660
Paper Feed, Pick-up and Separation Rollers....661
Paper Feed, Paper End and Paper Lift Sensors....663
Paper Lift Sensor....663
Paper Feed and Paper End Sensors....664
LCT Exit Motor....664
LCT Exit Roller Contact Motor....665
LCT Vertical Transport Motor....666
LCT Horizontal Relay Motor....666

LCT Paper Feed Motor, LCT Grip Motor....667
Reinstallation....668
LCT Lift Motor....668
LCT Exit Sensor....670
LCT Paper Exit Roller Contact Sensor....670
LCT Vertical Transport and Grip Sensors....671
Paper Height, Paper Width Sensors....673
Paper Height Sensors....673
Paper Width Sensors....674
Main Board....674

5. System Maintenance

Service Program Mode Operation....677
Service Mode Lock/Unlock....677
To Switch to the APL (Application) Window for Test Printing....677
Using the SP Mode....678
Direct Entry....678
Button Selection Entry....678
SP Mode Button Summary....679
Service Program Tables....681
SP Tables....681
Service Table Key....681
Abbreviations for SP Service Tables....681
Using SP Mode....688
CPM Down (SP1201)....688
SP1107-018: Low Temp On/Off....688
SP1201-001 and -002: Threshold Temperature for CPM Down....688
SP1201-003 to -005: Low Temp.: CPM Down Rate....688
SP1201-006 to -011: CPM Down Rate and Mode Threshold Temp....689
SP1201-012 to -023: CPM Down Rate for Each Mode....689
Using the Debug Log....690
Overview....690
Switching On and Setting Up Save Debug Log....691
Retrieving the Debug Log from the HDD....694

Recording Errors Manually....695
Debug Log Codes....695
Paper Library....696
Test Pattern Printing....697
Printing Test Pattern: SP2109 002....697
Test Pattern Table....697
SMC Lists....699
Memory All Clear: SP5801....700
Software and System Setting Reset....702
Software Reset....702
Resetting the System....702
PM Counter....703
Accessing the PM Counters....703
All PM Parts List....704
Parts List for PM Yield Indicator....705
Parts Exceeding Target Yield....706
Counter Clear for Parts Exceeding Target Yield....706
Clear All PM Settings....706
Counter List Print Out....707
Firmware Update....708
Before You Begin....708
Firmware Update Procedure....708
Operation Panel Update....709
Engine Update....710
Verifying the Firmware Update....710
Errors during Firmware Update....711
Fiery Controller System Update....712
Fiery System Installation....712
Updating the Fiery Controller....715

6. Troubleshooting

Program Download....717
Overview....717
Recovery Methods....717

Download Error Codes....718
Special Procedures....723
SP3812 001 (Devsetup Execute) Errors....723
Process Control Troubleshooting....724
Summary of Process Control SC Codes....724
Process Control Self-Check: SP3821....725
MUSIC Adjustment Result....734
Fiery Controller Troubleshooting....736
Service Call Conditions....737
Image Problems....738
White Spots....738
Mylar at the PTR Timing Roller....738
Vertical Transport Path from Trays 1 and 2....739
Paper Path from the LCT-MF or Optional LCT....739
Color Spots....740
For Printer M077....740
For Copier D095....741
Blurred Image....741
Blurred Image due to Ozone....741
Blurred Text....742
How to Enable Toner Reduction....742
Side Effect....743
White Lines in B/W Mode....743
Vertical White Line....743
Decision Flow....743
1. Countermeasure for Drum Problem....743
2. Countermeasure for Fusing Belt Error....744
White Scattered Dots....745
Before doing countermeasures....745
Countermeasures....746
Black Spots at 125 mm Interval....746
Fusing Problem....746
Paper Wrinkles/ Worm Tracks....747

Paper Problems....748
Consecutive JAM 38 (C JAM)....748
Color Paper and Preprinted Paper....748
Small Size Paper....749
Double Feed Problem from LCT (Main and Option)....749
Changing the "Wide LCT Fan Duty Adjustment" (SP1920-xxx)....749
Turning on the LCT Heater....750
Changing the upper limit of the paper stack in the LCT tray....750
No Paper Feed from LCT (Main and Option)....751
Operation Problems....753
Clearing SC 471, 475 or 476....753
ITB Condition Check....754
Stapling Error for Finisher SR5000 (B830)....754
Rear Controller Box Connection Error....757
Problem Cause....757
Possible Cause List....758
Abnormal Image when CN412 or CN415 is Disconnected....759
Remaining Toner Detection Error....760
Cleaning Procedure for the Toner Supply Tube....760
Operation Error after Controller Selection....761
Recovery of "Please wait" for Printer Model....761
Recovery of No Communication with Controller for Copier Model....762
Electrical Component Defects....763
Brown Fuse Conditions....763
PSU Type-EA1....763
PSU Type-EA2....763
PSU Type-EB....763
PSU Type-G....764
PSU Type-Controller....764
Jam Detection....765
Paper Jam Display....765
Paper Size Code....765
Jam Codes and Display Codes....766

Mainframe....766
Finisher SR5000 (B830)....771
Cover Interposer Tray CI5010 (B835)....773
Booklet Finisher SR5020 (D434)....775
Z-folding Unit ZF4000 (B660)....777
Trimmer Unit TR5020 (D455)....778
High Capacity Stacker SK5000 (D447)....779
Perfect Binder (D391)....782
Ring Binder RB5000 (D392)....785
Buffer Pass Unit (M379)....786
LCT-MF or LCIT RT5020 (D532)....788
INDEX....789

1. Product Information

Specifications

See "Appendices" for the following information:

- Specifications

Machine Configuration

Printer M077

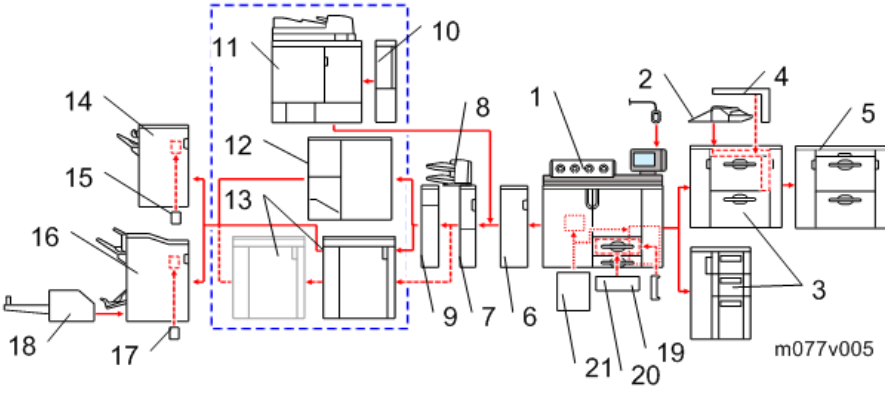

No.	Item	Machine Code	Comments
1	Mainframe	M077	90 ppm
2	Multi-Bypass Tray BY5000	B833	Common with AG-P1 Alternate paper feed source
3	LCIT RT5050	D532	Unique B832 or D532
	LCIT RT5000	B832	Common with AG-P1 B832 or D532
4	- Bridge Unit BU5000	D379	Child option for use when installing two LCTs (D532)
5	LCIT RT5050	D532	Unique 2nd LCT
6	Buffer Pass Unit Type 5000	M379	Common with AG-P1
7	Cover Interposer Tray CI5010 (Transport Unit)	B835	Common with AG-P1 Inserts cover sheets (2 trays).
8	Cover Interposer Tray (Tray Unit)	B835	

No.	Item	Machine Code	Comments
9	Z-Folding Unit	B660	Common with AG-P1 Z-Folds large sheets
10	Transit Pass Unit Type GB5000	D391	Common with B-C4 (K-C2)
11	Perfect Binder GB5000*[1]	D391	Common with B-C4 (K-C2) D391 is required. Only one of these (D391, D392 or D447) can be installed.
12	Ring Binder RB5000*[1]	D392	Common with B-C4 (K-C2) Only one of these (D391, D392 or D447) can be installed.
13	High Capacity Stacker SK5000	D447	Two stackers can be installed. Only one of these (D391, D392 or D447) can be installed.
14	Finisher SR5000	B830	Common with AG-P1 Corner stapling, edge stapling
15	- Punch Unit PU5000	B831	Common with AG-P1 Child option for Finisher B830
16	Finisher SR5020	D434	Common with B-C4 Booklet stapling, corner stapling, edge stapling
17	- Punch Unit PU 5020	B449	Common with B-C4 Child option for Finisher D434
18	Trimmer Unit TR5020	D455	Common with B-C4
19	- Tab Sheet Holder Type3260	B499	Common with AG-P1
20	- A3/11"x17" Tray Unit TK5000	B331	Common with AG-P1
21	Fuser Unit Air Separator Type C901	M390	Unique

*[1]: Neither Perfect Binder (D391) nor Ring Binder (D392) can be installed in the M078 or D097 model.

Copier D095

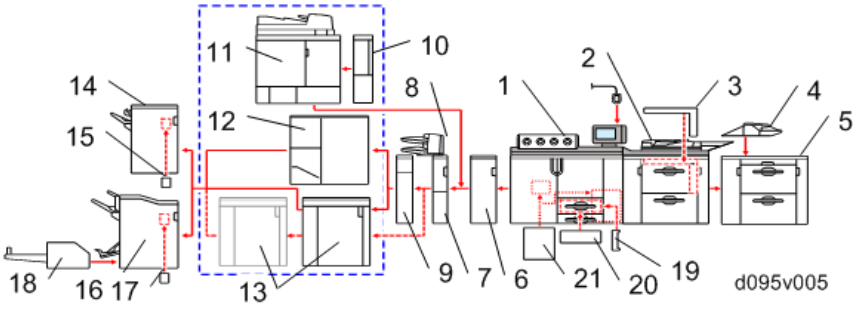

No.	Item	Machine Code	Comments
1	Mainframe	D095	90 cpm/ ppm
2	LCT-MF	D095	The ADF and Scanner are built into this LCT.
3	- Bridge Unit BU5000	D379	Child option for use when installing optional LCT (D532)
4	Multi-Bypass Tray BY5000	B833	Common with AG-C1 Alternate paper feed source
5	LCIT RT5050	D532	Unique
6	Buffer Pass Unit Type 5000	M379	Common with AG-C1
7	Cover Interposer Tray CI5010 (Transport Unit)	B835	Common with AG-C1 Inserts cover sheets (2 trays).
8	Cover Interposer Tray (Tray Unit)	B835	
9	Z-Folding Unit	B660	Common with AG-C1 Z-Folds large sheets
10	Transit Pass Unit Type GB5000	D391	Common with B-C4 (K-C2)
11	Perfect Binder GB5000*1	D391	Common with B-C4 (K-C2) D391 is required. Only one of these (D391, D392 or D447) can be installed.

No.	Item	Machine Code	Comments
12	Ring Binder RB5000*[1]	D392	Common with B-C4 (K-C2) Only one of these (D391, D392 or D447) can be installed.
13	High Capacity Stacker SK5000	D447	Two stackers can be installed. Only one of these (D391, D392 or D447) can be installed.
14	Finisher SR5000	B830	Common with AG-P1 Corner stapling, edge stapling
15	- Punch Unit PU5000	B831	Common with AG-P1 Child option for Finisher B830
16	Finisher SR5020	D434	Common with B-C4 Booklet stapling, corner stapling, edge stapling
17	- Punch Unit PU 5020	B449	Common with B-C4 Child option for Finisher D434
18	Trimmer Unit TR5020	D455	Common with B-C4
19	- Tab Sheet Holder Type3260	B499	Common with AG-C1
20	- A3/11"x17" Tray Unit TK5000	B331	Common with AG-C1
21	Fuser Unit Air Separator Type C901	M390	Unique

*[1]: Neither Perfect Binder (D391) nor Ring Binder (D392) can be installed in the M078 or D097 model.

Overview

1

Machine Layout

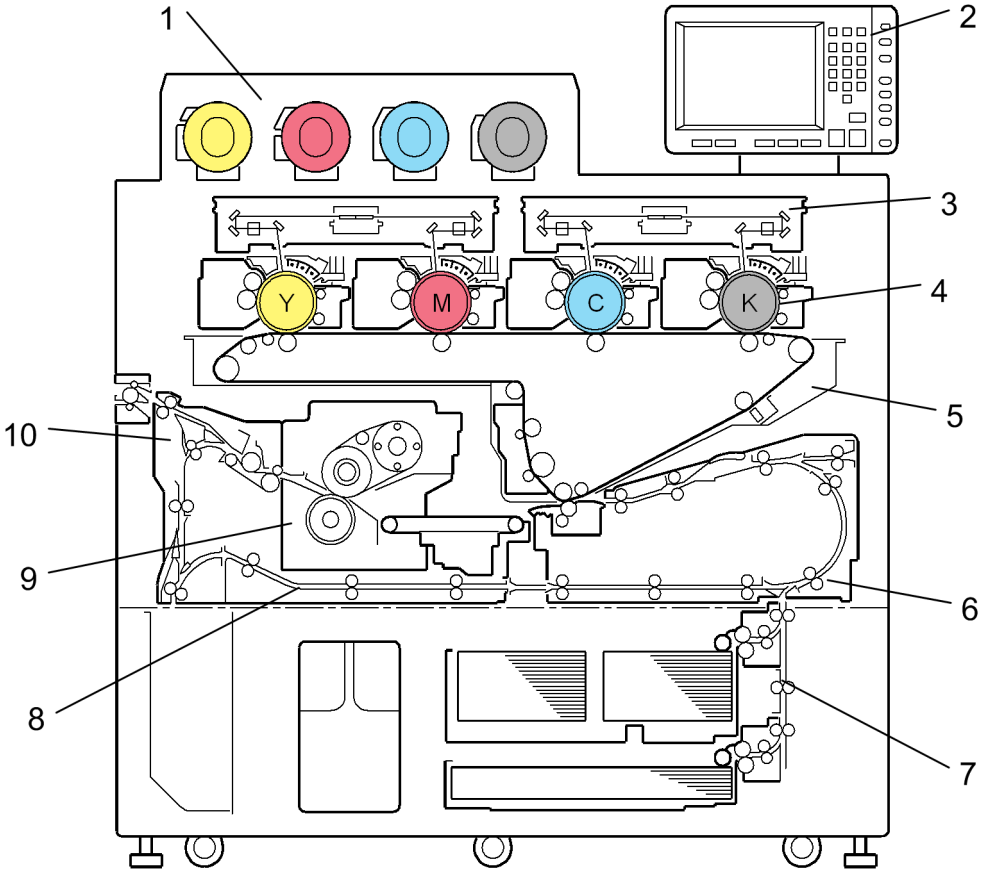

d095v001

1. Toner Hopper Unit	6. Registration Unit
2. Operation Panel	7. Paper Feed Unit
3. Laser Unit	8. Duplex Feed Path
4. PCDU (Photoconductor and Development Unit)	9. Fusing Unit
5. ITB (Image Transfer Belt) Unit	10. Paper Exit Unit

Paper Path

Printer (M077) model

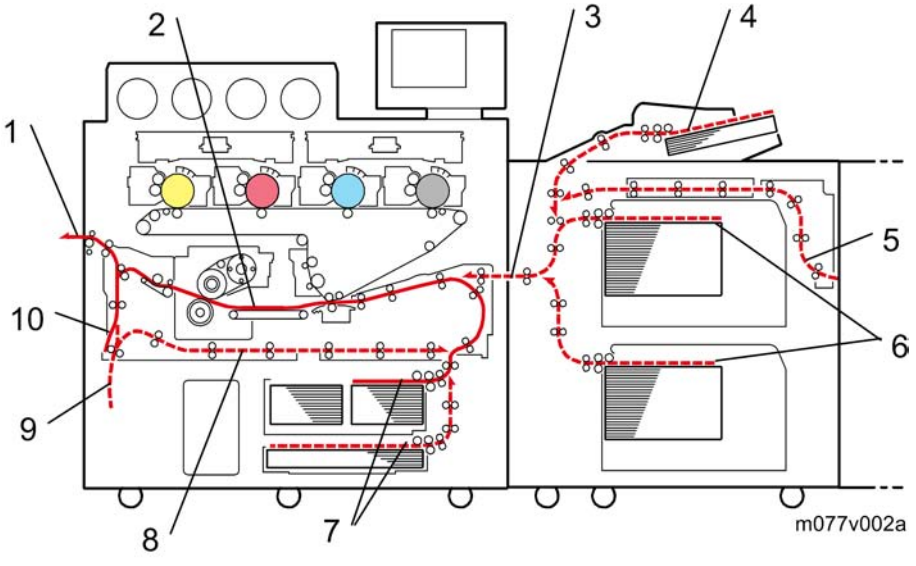

1. Paper Exit Path (for next peripheral)	6. Paper Feed Path (from optional tray 3 and 4)
2. Paper Transport Path	7. Paper Feed Path (from tray 1 and 2)
3. Paper Entrance Path (from optional LCT)	8. Duplex Path
4. Bypass Tray Path	9. Switchback Path
5. Paper Entrance Path (from optional 2nd LCT)	10. Inverter Path

Copier (D095) model

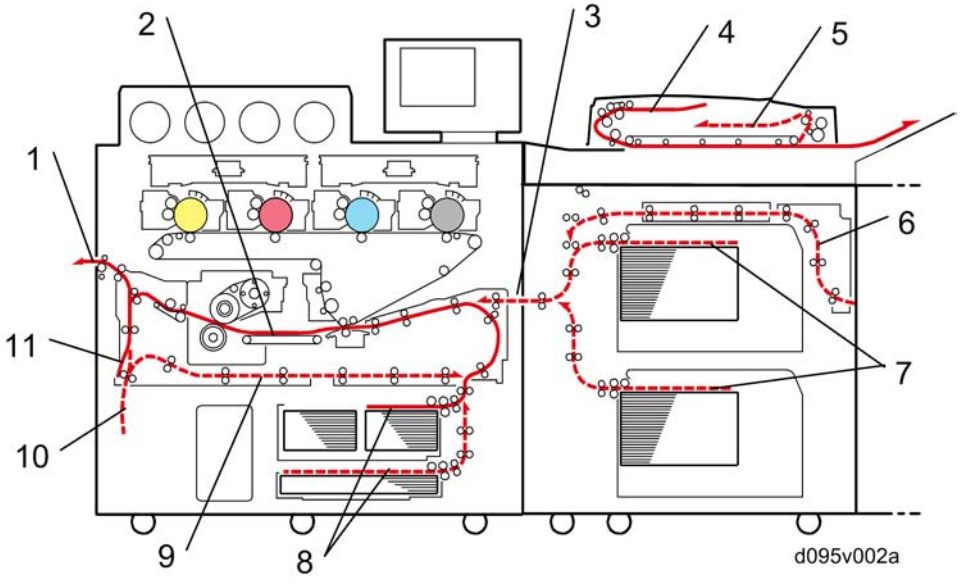

1. Paper Exit Path (for next peripheral) 2. Paper Transport Path 3. Paper Entrance Path (from LCT-MF) 4. DF Scanning Path 5. DF Scanning Path: Duplex Scanning 6. Paper Transport Path (from optional LCT)	7. Paper Feed Path (from tray 3 and 4) 8. Paper Feed Path (from tray 1 and 2) 9. Duplex Path 10. Switchback Path 11. Inverter Path

Fan Location

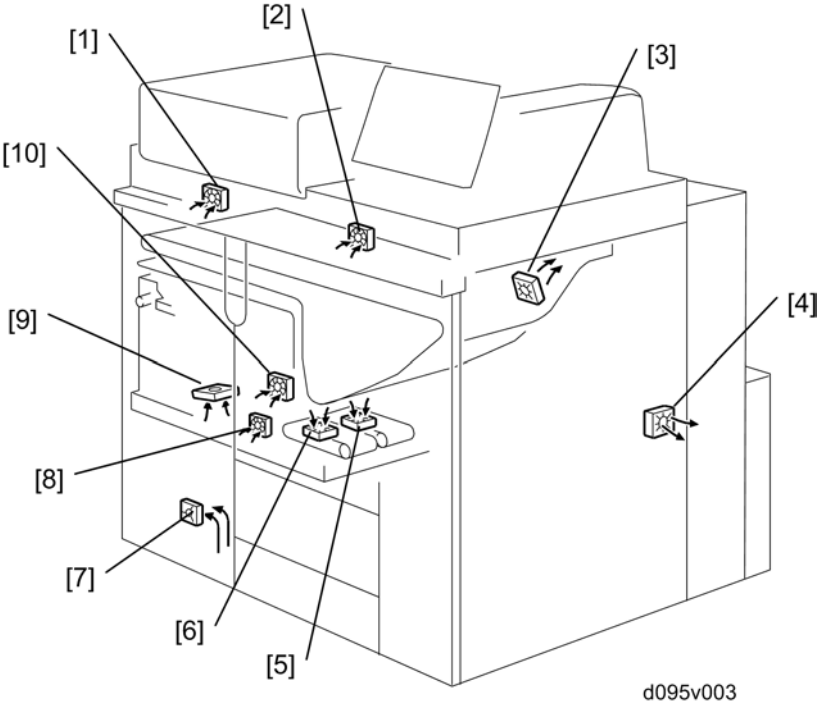

No.	Description	Air In / Out
1	Laser Unit MY	In
2	Laser Unit KC	In
3	Development CK Fan	Out
4	Registration Fan	Out
5	PTB Fan 2	Out
6	PTB Fan 1	Out
7	PTR Unit Cooling Fan	Out
8	PTB Cooling Fan	In
9	Paper Cooling Fan 3	In
10	ITB Fan	In

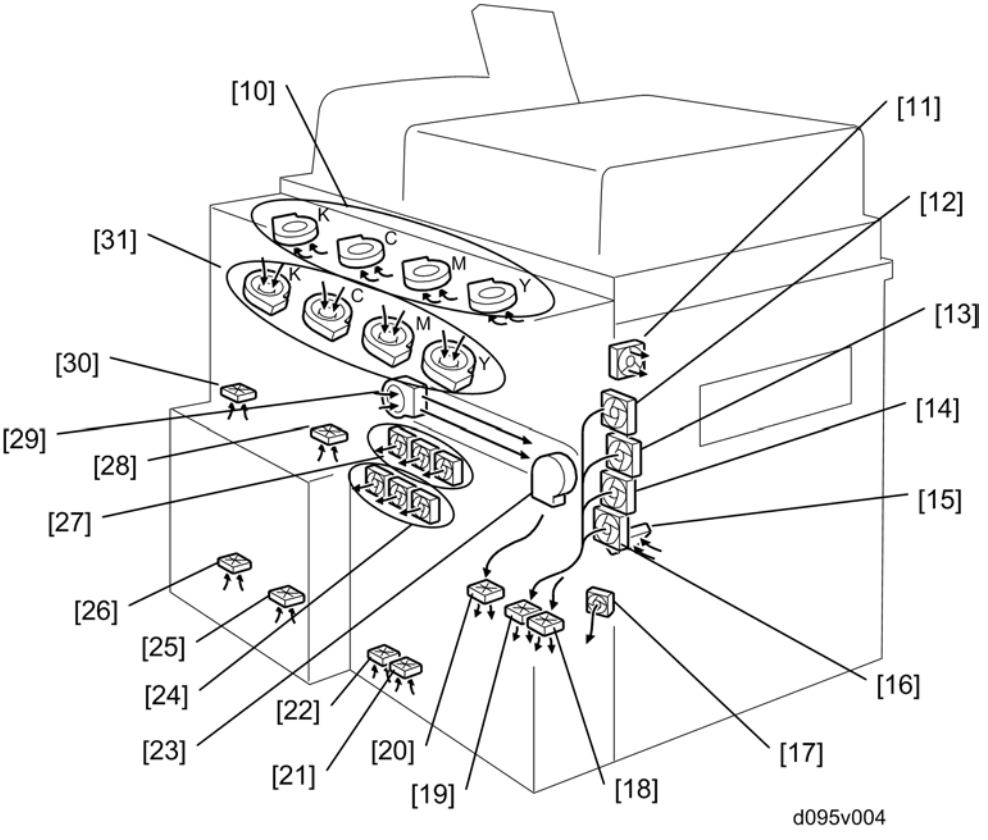

No.	Description	Air In / Out
10	Development Fan	In
11	Fusing Fan 4	Out
12	Fusing Fan 1	Out
13	Fusing Fan 2	Out
14	Fusing Fan 3	Out
15	Paper Cooling Fan 1	Out
16	Paper Cooling Fan 2	In
17	Exit Fan	Out
18	Fusing Exhaust Fan 3	Out
19	Fusing Exhaust Fan 2	Out

No.	Description	Air In / Out
20	Fusing Exhaust Fan 1	Out
21	PSU Fan5	In
22	PSU Fan 4	In
23	Fusing Fan 6	Out
24	PSU Fan 3	Out
	PSU Fan 2	Out
	PSU Fan 1	Out
25	Controller Fan4	In
26	Controller Fan3	In
27	Plotter Cooling Fan 1	Out
	Plotter Cooling Fan 2	Out
	Plotter Cooling Fan 3	Out
28	Controller Fan2	Out
29	Fusing Fan 5	In
30	Controller Fan1	Out
31	Ozone Fan	Out

Guidance for Those Who are Familiar with Predecessor Products

The D095 and M077 are successor models to the D016 and G178. If you have experience with the predecessor products, the following information will be of help when you read this manual.

Different Points from Predecessor Products

	D095/M077	D016/G178
Controller	Standard external Fiery	Standard embedded Fiery
Toner	Chemical toner/ Oil less	Pulverized Toner
Max. Paper Thickness	Simplex: 350 g/m^2 Duplex: 350 g/m^2	Simplex: 350 g/m^2 Duplex: 220 g/m^2
Operation Panel	New Operation Panel	Common Panel with Katana series
New TCRU Units	Feed Rollers and Fusing Unit	-
Energy Star	Yes	No
Longer Durability	Max. Monthly: 350K Life: 21,000K	Max. Monthly:240K Life: 14,400K
Fusing Unit	No Oil Cleaning System	Oil Cleaning System
Fusing Unit Air Separation	Optional	Not available
Attention Light	Yes	No
New Peripherals	• Booklet Finisher SR5020 • Trimmer Unit TR5020 • High Capacity Stacker SK5010 • Fuser Unit Air Separator Type C901	-
Data Overwrite Security Unit	Standard (Installed in SD slot 1)	Optional

2. Installation

Installation Requirements

Operating Environment

1. Temperature Range
   - Recommended Temp.: 23°C (73.4°F)
   - Allowed Temp.: 10°C to 32°C (50°F to 90°F) – See the Note below
2. Humidity Range: 15% to 80% Rh
3. Ambient Illumination: Less than 1,500 lux (do not expose to direct sunlight or strong light.)
4. Ventilation: Air must be replaced a minimum of 3 times per hour
5. Ambient Dust: Less than 0.10 mg/m^3

Note

- If the machine is installed in a location where the ambient temperature is more than 30°C (86°F): (1) Do not run full color printing longer than 2 hours, and (2) never turn the main power switch off immediately after a long print job.
- Leave the machine on so that the fans can expel the hot air from the machine and cool the electronic components.
- If this machine is to be used in a high temperature and high humidity condition, the tray heater is required to get the proper print quality. Connect the tray heater harness during the mainframe installation (☛page 65 "Mainframe").

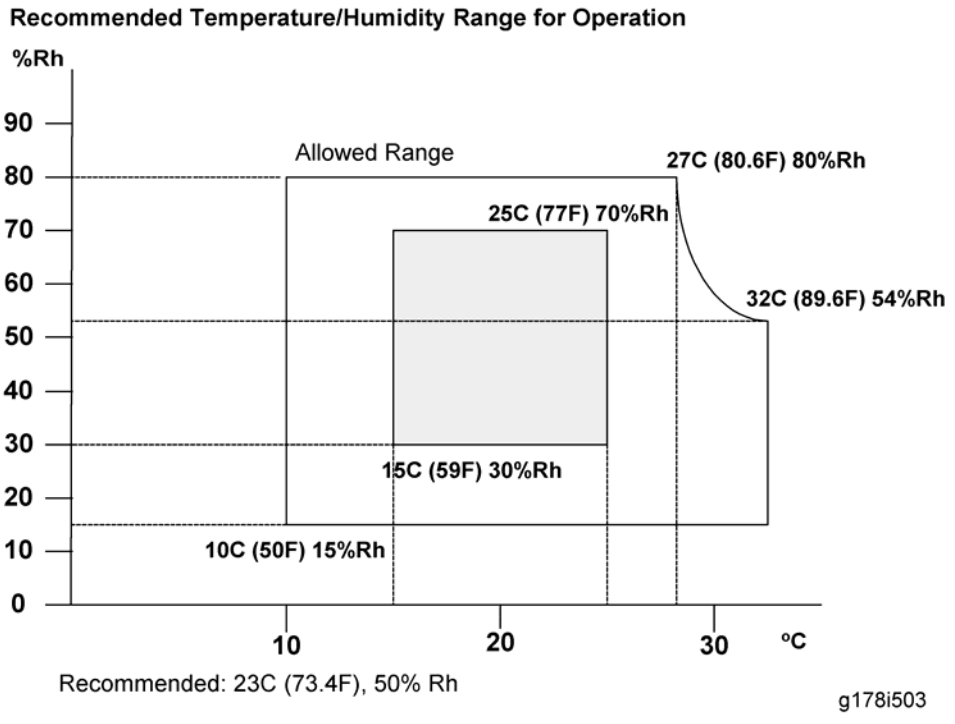

6. If the installation area has air-conditioners or heaters, put the machine in a location that agrees with these conditions:
   - Where there are no sudden temperature changes from low to high, or high to low.
   - Where it will not be directly exposed to cool air from an air conditioner in the summer.
   - Where it will not be directly exposed to reflected heat from a heater in the winter
7. Do not put the machine where it will be exposed to gases that can cause corrosion.
8. Do not install the machine at any location over 2,000 m (6,500 feet) above sea level.
9. Put the mainframe on a strong and level surface. The front and rear of the machine must be less than 2.5 mm (0.1") away from level.
10. Do not put the machine where there could be strong vibrations.
11. Do not connect the machine to the same power source as other electrical devices.
12. The machine can make an electromagnetic field, and this can cause interference with radio or television reception.

Machine Level

- Front to rear: Less than 2.5 mm (0.1") away from level
- Right to left: Less than 5.0 mm (0.2") away from level

The machine feet can be turned to adjust them up or down, to make the machine level. For details, see the "Leveling the Main Machine" in the "page 65 "Mainframe"".

Minimum Space Requirements

Put the mainframe near the power source. Minimum clearance must be as shown below. The same amount of clearance is necessary when optional peripheral devices are installed.

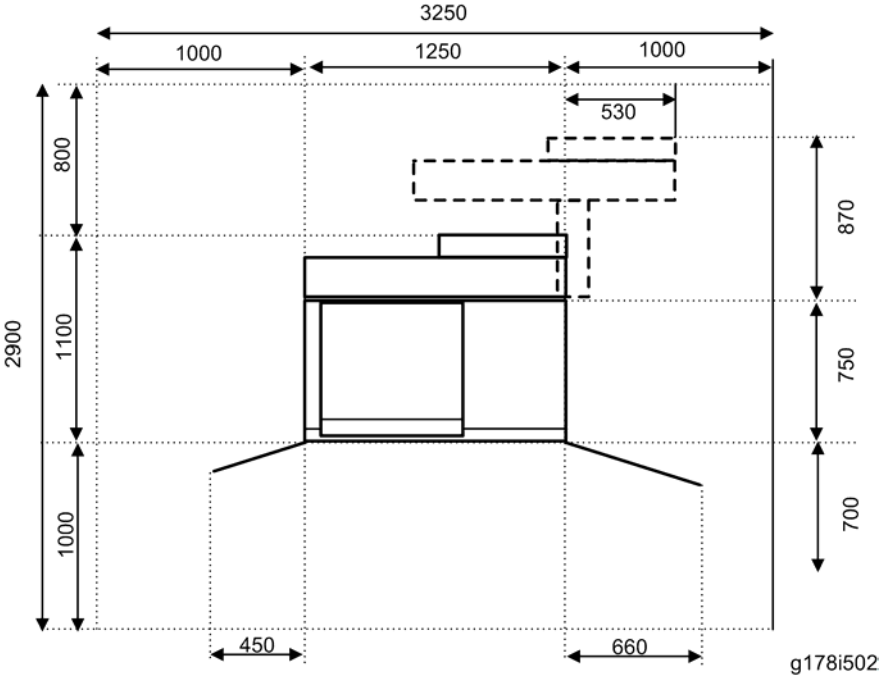

Dimensions

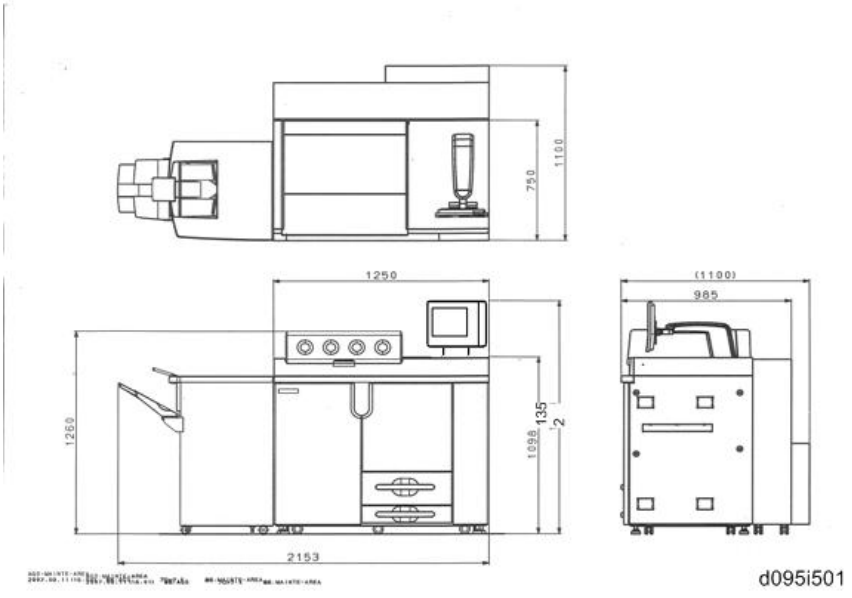

Side View with Finisher SR5000 (B830) or SR5020 (D434)

Mainframe: Printer M077

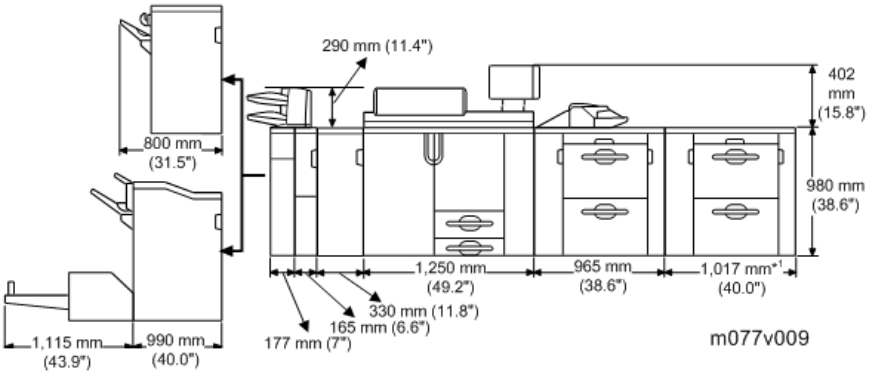

*1: Including the top right cover

Mainframe: Copier D095

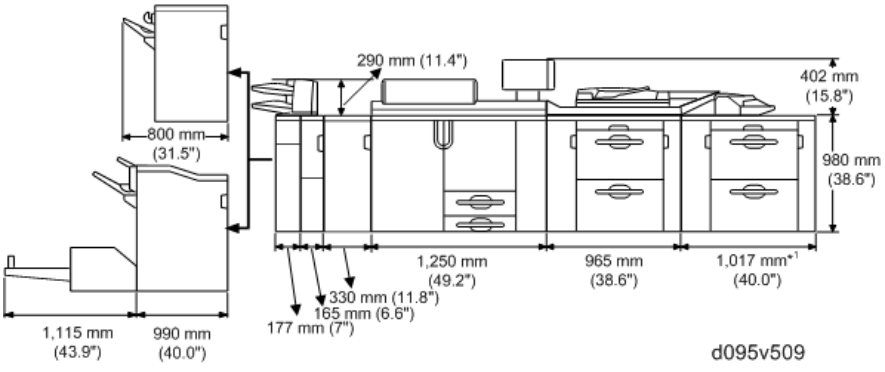

*1: Including the top right cover

Side View with Ring Binder RB5000 (D392)

Mainframe: Printer M077

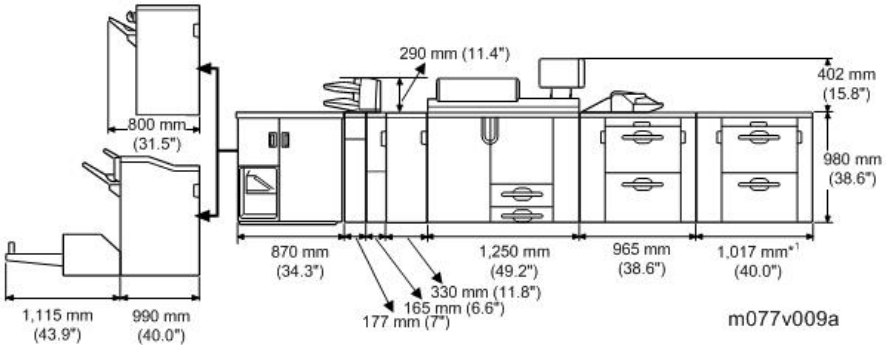

*1: Including the top right cover

Mainframe: Copier D095

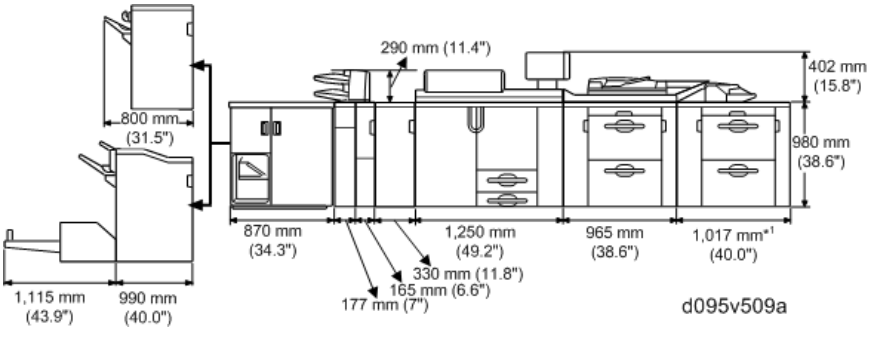

*1: Including the top right cover

Side View with Perfect Binder GB5000 (D391)

Mainframe: Printer M077

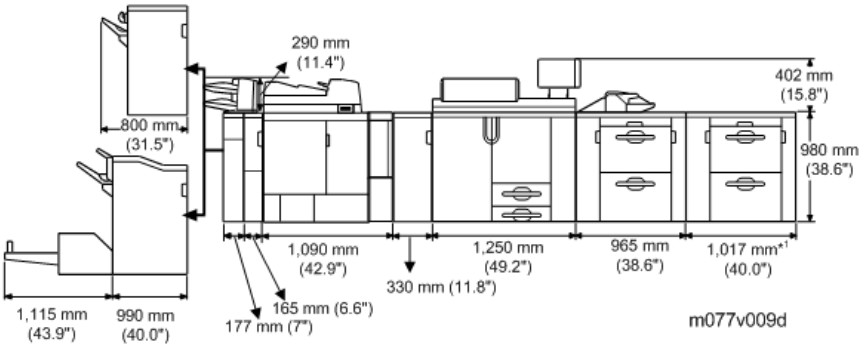

*1: Including the top right cover

Mainframe: Copier D095

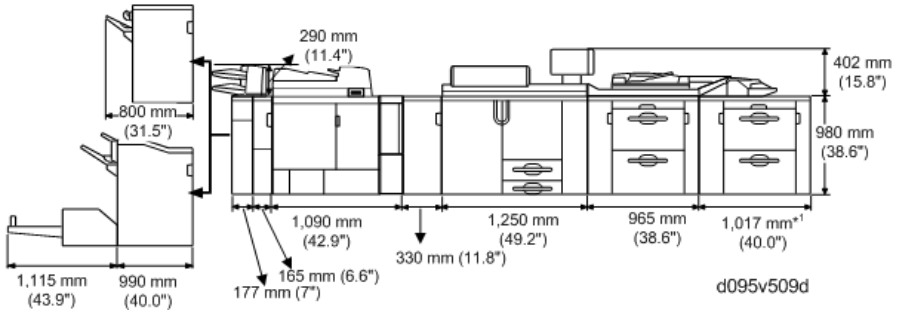

*1: Including the top right cover

Side View with High Capacity Stacker SK5000 (D364)

Mainframe: Printer M077

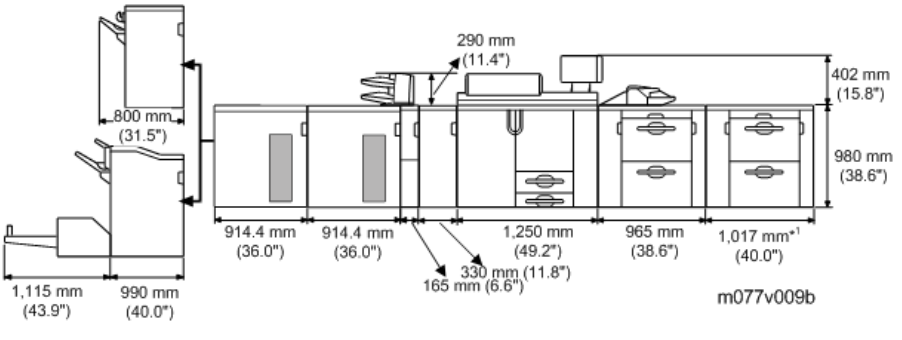

*1: Including the top right cover

Mainframe: Copier D095

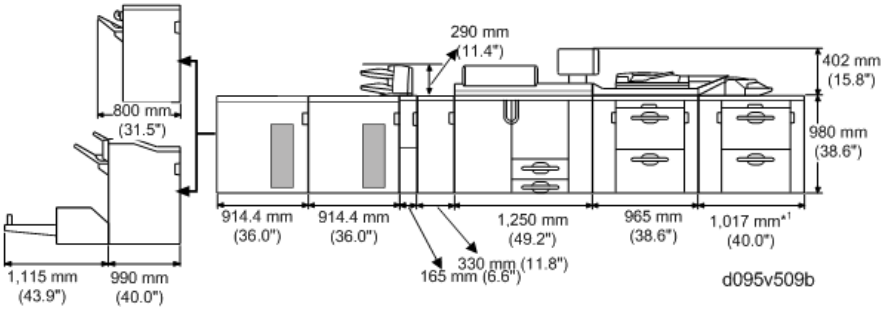

*1: Including the top right cover

Power Requirements

⚠WARNING

- Make sure that the wall outlet is near the mainframe and that you can get access to it easily. Make sure the plug is tightly connected to the outlet.
- Do not connect more than one electrical device to the same power outlet.
- Be sure to ground the machine.
- Do not put objects on the power cord.

Input voltage level

- North America 208 to 240V, 50/60 Hz: More than 24 A
- Europe/Asia 220/230/240V, 50/60 Hz: More than 25 A

Permissible voltage fluctuation: ±10%

Required Breaker

The operating area where the machine is to be installed must have a required breaker for the power line.

- North America: Listed circuit breaker, rating:240V30A, double pole
- Europe: Circuit breaker, rating:240V30A, double pole

⚠CAUTION

- Do not turn off the main power switch when the power LED is lit or flashing. To prevent damage to the hard disk or memory, push the operation switch to turn the power off, then do nothing until the power LED goes off, and then turn the main power switch off.

There are two power switches on the machine:

Main Power Switch

This is located inside the front left cover of the machine. This switch must always be on unless a technician does work on the machine.

Operation Switch

This is located on the top-right side of the operation panel. This is the switch that the customer uses to turn the machine on and off.

Correct Procedure to Turn Off the Power

Shut the Fiery Controller Down First

The Fiery controller must be shut down before turning off the power supply to the Fiery controller. Therefore, turn off the Fiery controller first at the operation panel before turning off the main power switch of the machine.

Use the "Shut Down" button on the operation panel to turn off the Fiery controller.

Do not turn off the main power switch of the mainframe before shutting down the Fiery controller.

The shut down procedure for the Fiery controller is described below.

1. Press the "Fiery" tab on the operation panel.
2. Press the "Restart Fiery" button on the operation panel.
3. Press the "Shut Down" button on the operation panel.

The shutdown can be also done with the Service Menu of the Fiery controller. If you have mistakenly turned off the machine first, use the "Service Menu" of the Fiery controller.

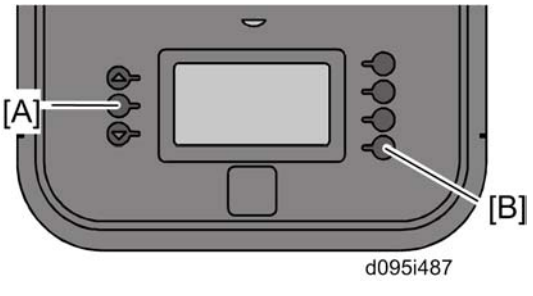

1. Press the button [A] (Menu) on the operation panel of the Fiery controller.
2. Select "Shut Down System" with the button [B].

Then Shut Down the Machine

1. Push the operation switch to turn the power off
2. When the power LED goes off, turn the main power switch off.

⚠CAUTION

- Do not turn off the main power switch when the power LED is lit or flashing.

Before You Begin...

Overview of Optional Peripherals

Optional Peripherals Configuration for Printer M077

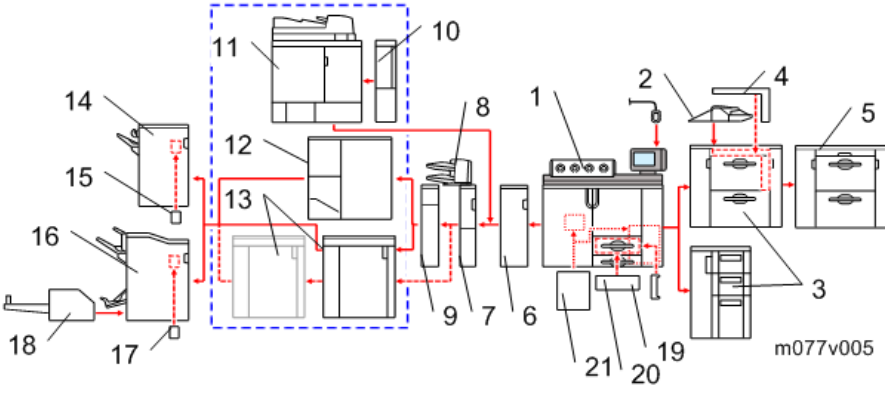

There are many peripherals available for this machine. Install them in this order:

1. Mainframe (M077)
2. Multi Bypass Tray BY5000 (B833)

   Important

   - **This unit must be installed on the LCIT RT5050 (D532) before the LCT is docked to the mainframe.**
3. LCIT RT5050 (D532) or LCIT RT5030 (D452)
4. Bridge Unit BU5000 (D379)

   Note

   - This unit is required only when two LCITs RT5050 are installed at the same time. Otherwise, it is not required.
5. LCIT RT5050 (D532)
6. Buffer Pass Unit Type 5000 (M379)
7. Cover Interposer Tray CI5010 (B835: Transport Unit)
8. Cover Interposer Tray (B835: Tray Unit)

Important

- **The Transport Unit (base) of the Cover Interposer Tray is narrow and cannot fully support its tray unit. Part of the tray unit must rest on top of the Z-folding unit (or the next peripheral device installed to the left of the cover interposer).**
- **To prevent the Cover Interposer Tray from falling, always install the next peripheral device in line before installing the tray unit "8" of the Cover Interposer Tray.**

9. Z-Folding Unit ZF4000 (B660)

Note

- This unit cannot be installed in the same line as the High Capacity Stacker SK5010 (D447) if two stacker units are to be installed in the mainframe.

10. Transit Pass Unit Type GB5000 (D391)

Note

- This unit is a child option for the Perfect Binder GB5000. This is required when the Perfect Binder GB5000 is installed in the mainframe.

One of the following units can be installed in the same line.

- 11: Perfect Binder GB5000 (D391)
- 12: Ring Binder RB5000 (D392)
- 13: High Capacity Stacker SK5010 (D447),

11. Perfect Binder GB5000 (D391)
12. Ring Binder RB5000 (D392)
13. High Capacity Stacker SK5010 (D447)

Note

- Two "High Capacity Stacker SK5010 (D447)" units can be installed with the mainframe at the same time.
- If two stacker units are to be installed in the mainframe, Z-Folding Unit ZF4000 (B660) cannot be installed in the same line as the two stacker units.

14. Finisher SR5000 (B830)
15. Punch Unit PU 5000 (B831)
    - For Finisher SR5000 (B830) only
16. Finisher SR5020 (D434)
17. Punch Unit PU 5020 (B449)
    - For Finisher SR5020 (D434) only
18. Trimmer Unit TR5020 (D455)
    - This unit requires the Finisher SR5020 (D434).

Other Options

These remaining options can be installed at any time and in any order.

19. Tab Sheet Holder Type3260 (B499)
    - Option for tandem tray
20. A3/11"x17" Tray Unit TK5000 (B331)
    - Option for tandem tray
21. Fuser Unit Air Separator Type C901 (M390)
22. Cooling Fan Unit Type 5000 (not shown)
    - Option for Finisher SR5000 (B830) only
23. Optional Counter Interface Unit Type A (not shown)
24. VM Card Type F (not shown)

Optional Peripherals Configuration for Copier D095

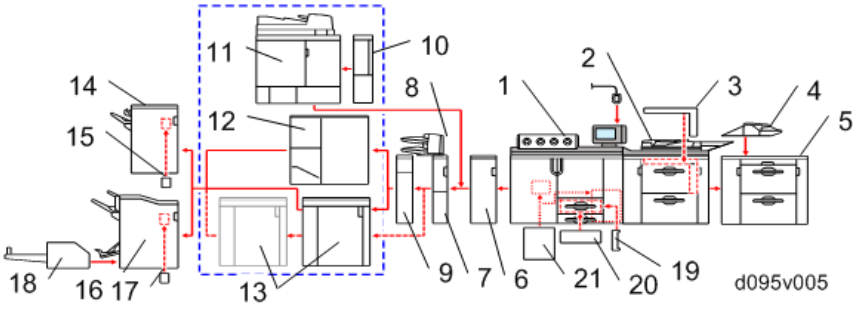

There are many peripherals available for this machine. Install them in this order:

1. Mainframe (D095)
2. LCT-MF (D095)
3. Vertical and Horizontal Bridge Unit BU5000 (D379)

   Note

   - This unit is required only when the optional LCIT RT5050 is installed. Otherwise, it is not required.
4. Multi Bypass Tray BY5000 (B833)

   Important

   - **This unit must be installed on the LCIT RT5050 (D532) before the LCT is docked to the LCT-MF.**
5. LCIT RT5050 (D532)
6. Buffer Pass Unit Type 5000 (M379)

7. Cover Interposer Tray CI5010 (B835: Transport Unit and Tray)
8. Cover Interposer Tray (B835: Tray Unit)

   Important

   - **The "Transport Unit (base)" of the "Cover Interposer Tray" is narrow and cannot fully support its tray unit. Part of the tray unit must rest on top of the Z-folding unit (or the next peripheral device installed to the left of the cover interposer).**
   - **To prevent the "Cover Interposer Tray" from falling, always install the next peripheral device in line before installing the tray unit "8" of the "Cover Interposer Tray".**
9. Z-Folding Unit ZF4000 (B660)

   Note

   - This unit cannot be installed in the same line as the High Capacity Stacker SK5010 (D447) if two stacker units are to be installed in the mainframe.
10. Transit Pass Unit Type GB5000 (D391)

    Note

    - This unit is a child option for the Perfect Binder GB5000. This is required when the Perfect Binder GB5000 is installed in the mainframe.

    One of the following units can be installed in the same line.

    - 11: Perfect Binder GB5000 (D391)
    - 12: Ring Binder RB5000 (D392)
    - 13: High Capacity Stacker SK5010 (D447),
11. Perfect Binder GB5000 (D391)
12. Ring Binder RB5000 (D392)
13. High Capacity Stacker SK5010 (D447)

    Note

    - Two "High Capacity Stacker SK5010 (D447)" units can be installed with the mainframe at the same time.
    - I If two stacker units are to be installed in the mainframe, Z-Folding Unit ZF4000 (B660) cannot be installed in the same line as the two stacker units.
14. Finisher SR5000 (B830)
15. Punch Unit PU 5000 (B831)
    - For Finisher SR5000 (B830) only
16. Finisher SR5020 (D434)
17. Punch Unit PU 5020 (B449)
    - For Finisher SR5020 (D434) only

18. Trimmer Unit TR5020 (D455)
    - This unit requires the Finisher SR5020 (D434).

Other Options

These remaining options can be installed at any time and in any order.

19. Tab Sheet Holder Type3260 (B499)
    - Option for tandem tray
20. A3/11"x17" Tray Unit TK5000 (B331)
    - Option for tandem tray
21. Fuser Unit Air Separator Type C901 (M390)
22. Cooling Fan Unit Type 5000 (not shown)
    - Option for Finisher SR5000 (B830) only
23. Optional Counter Interface Unit Type A (not shown)
24. VM Card Type F (not shown)

Mainframe

Accessories

Check the accessories and their quantities against this list.

Figure-1

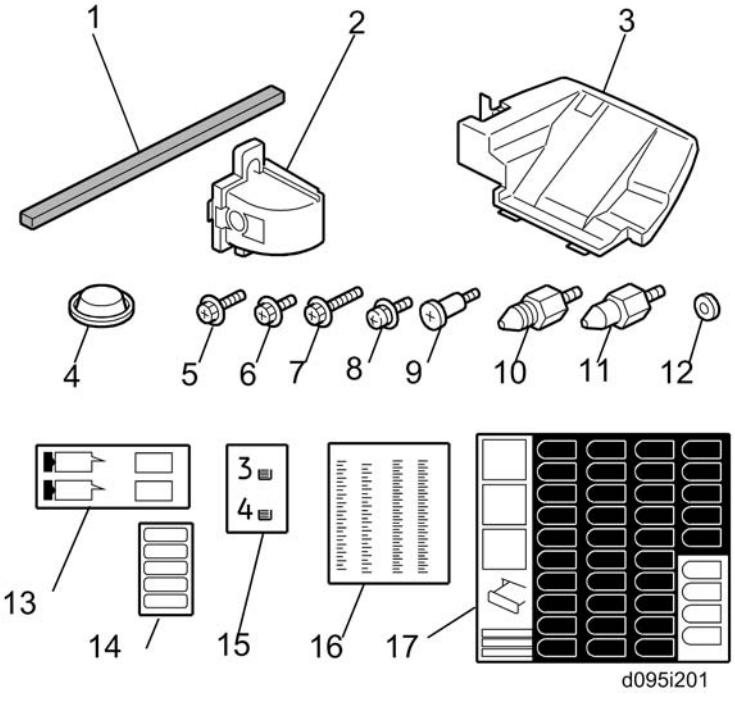

No.	Figure-1 Description	Q'ty
1	Sponge Strip	1
2	IF Connector Cover	1
3	Original Exit Tray	1
4	Leveling Shoe	4
5	Screw: M4x16	2
6	Screw: M4x8	6
7	Screw: M4x20	2

No.	Figure-1 Description	Q'ty
8	Washer Screw: M4x8	1
9	Stud Screw	2
10	Upper Pin	2
11	Lower Pin	2
12	Decal for Face-up	1
13	Washer (for Grand Cable of LCT-MF)	1
14	Decal for Paper Loading	2
15	Decal for Paper Tray	1
16	Decal for Scale	2
17	Decal for Paper Size	1

Figure-2

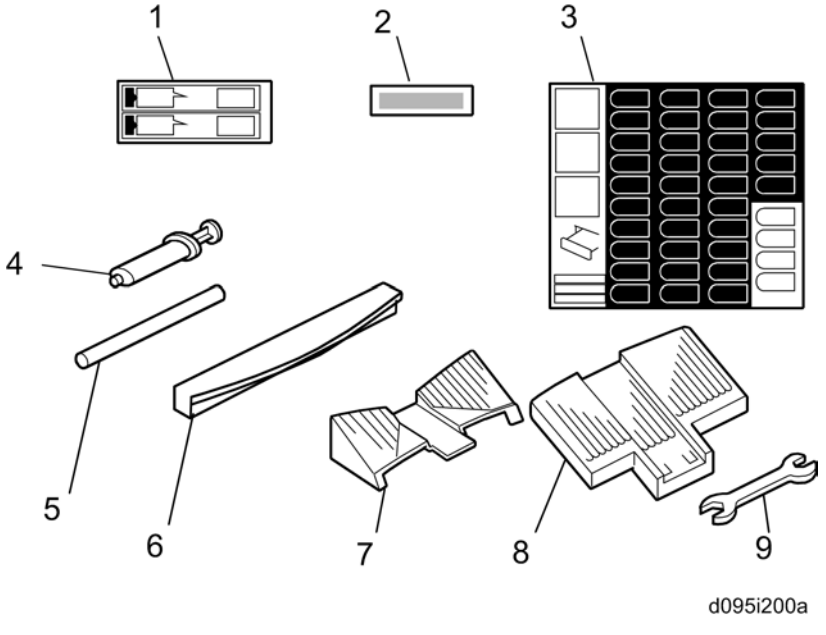

No.	Figure-2 Description	Q'ty
1	Decal for Paper Loading	2

No.	Figure-2 Description	Q'ty
2	Brand Logo Plate (only for EU model)	5
3	Decal for Paper Size	1
4	Grease Dispenser	1
5	Heater Guide	1
6	Top Right Cover (LCT-MF)	1
7	Support Tray for Finisher SR5000 (B830)	1
8	Shift Tray for Finisher SR5000 (B830)	1
9	Wrench	1

Figure-3

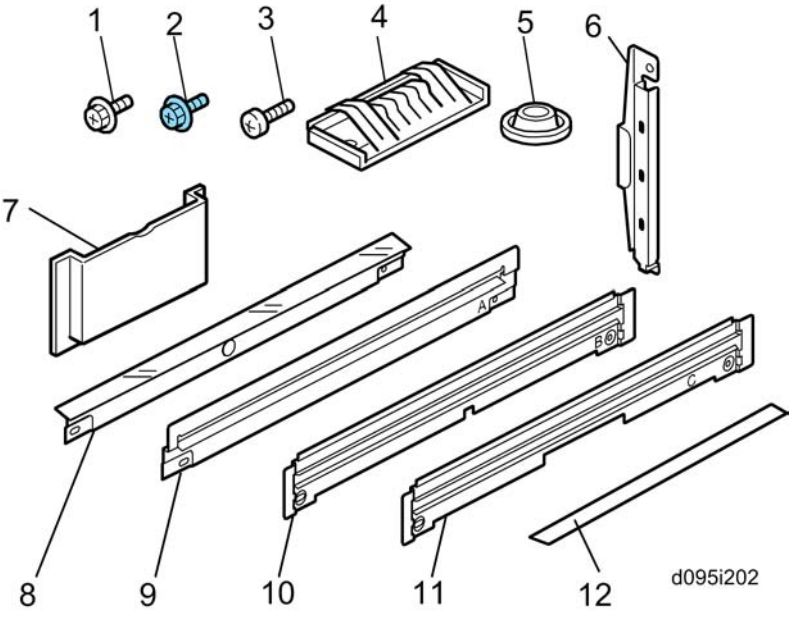

No.	Figure-3 Description	Q'ty
1	Screw: M4x8	2
2	Screw: M3x6	2
3	Bind Screw: M4x8	4

No.	Figure-3 Description	Q'ty
4	Ground Plate	1
5	Leveling Shoe	4
6	SD Slot Cover	1
7	Manual Pocket	1
8	Relay Guide Plate for Finisher SR5000 (B830)	1
9	Entrance Guide Plate (A)	1
10	Entrance Guide Plate (B)	1
11	Entrance Guide Plate (C)	1
12	Mylar for Finisher SR5000 (B830)	1

Figure-4

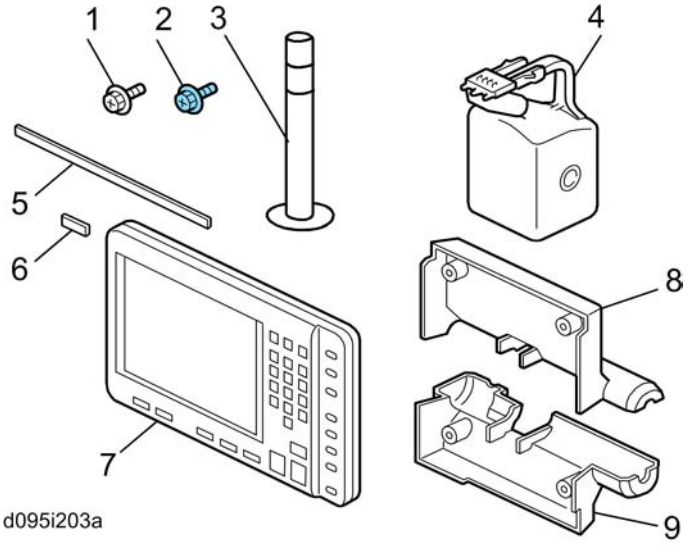

No.	Figure-4 Description	Q'ty
1	Screw: M3x8	3
2	Screw: M4x6	4
3	Attention Light	1

No.	Figure-4 Description	Q'ty
4	Developer Bottle for Each Color	4
5	Function Name Plate for NA and AA only	1
6	Keytop for Controller	2
7	Operation Panel Unit	1
8	Operation Panel Rear Upper Cover	1
9	Operation Panel Rear Lower Cover	1
-	T6000 (70W) A4/LT (100 sheets)	1

Installation

Rating Voltage for Peripherals

⚠CAUTION

- Make sure to plug the cables into the correct sockets.

Right Side

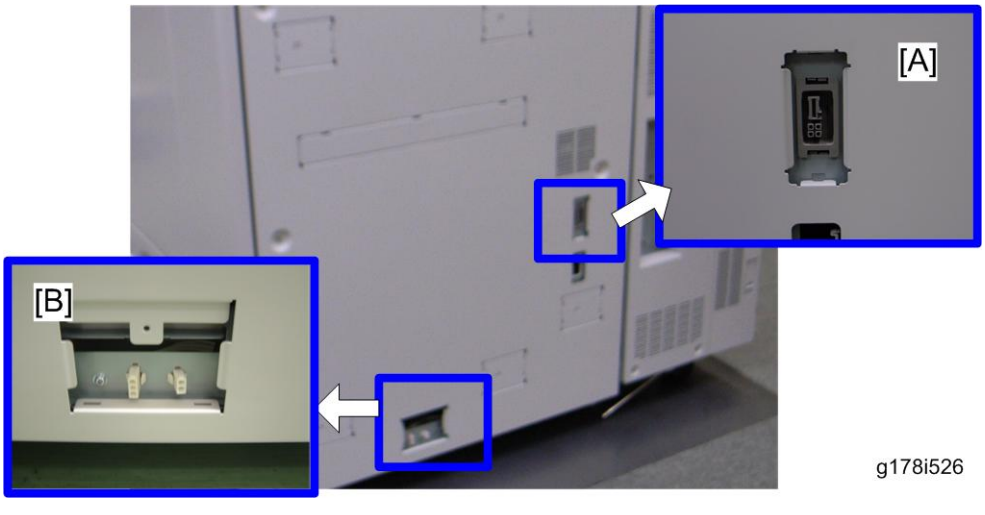

[A]: **LCT** "Rating Voltage of Output Connector for Accessory: Max. DC 24 V"

[B]: **LCT Tray Heaters** "Rating Voltage of Output Connector for Accessory: Max. AC 240 V ±10%"

Left Side

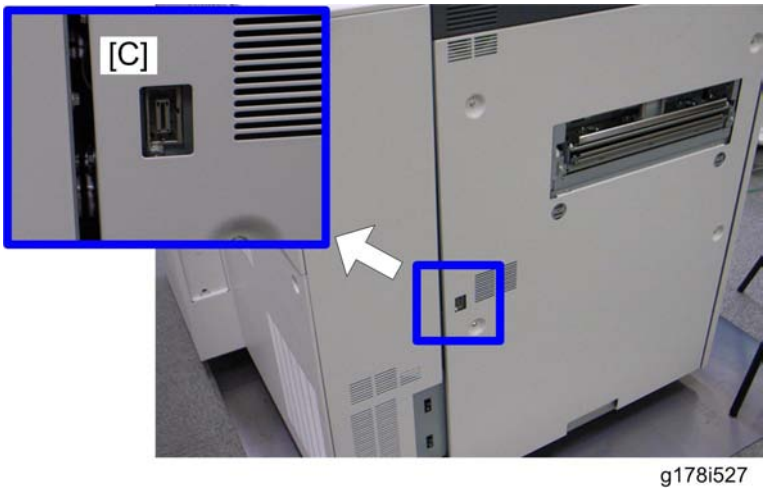

g178i527

[C]: **Finishers** "Rating Voltage of Output Connector for Accessory: Max. DC 24 V"

External Tape and Packing Material

d095i504

m077i505

g178i505

⚠WARNING

- Always turn the machine off and disconnect the machine power cord before you do these procedures. (☛page 58 "Correct Procedure to Turn Off the Power ")

1. Remove all tapes and packing material from the mainframe.
2. To set the leveling shoes at the rear side, open the rear controller box (☛page 354)

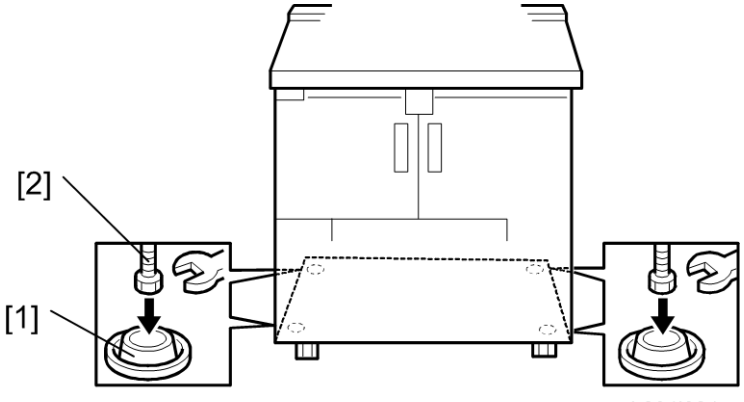

b234i024a

3. Set the leveling shoes [1] under the feet [2], then level the machine.

⚠CAUTION

- Maximum lift height between a floor and one of casters is 5 mm. Do not lift the machine over the maximum lift height (5 mm).

Leveling the Mainframe

The level between front side and rear side of the mainframe must be within ± 2.5 mm/1,000 mm. Adjust the machine's level by adjusting the four feet under the machine.

1. Open the front doors.

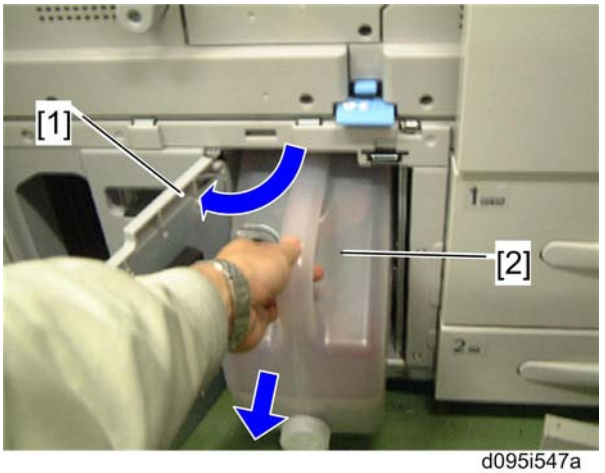

d095i547a

2. Open the waste toner bottle door [1].
3. Take out the waste toner bottle [2].

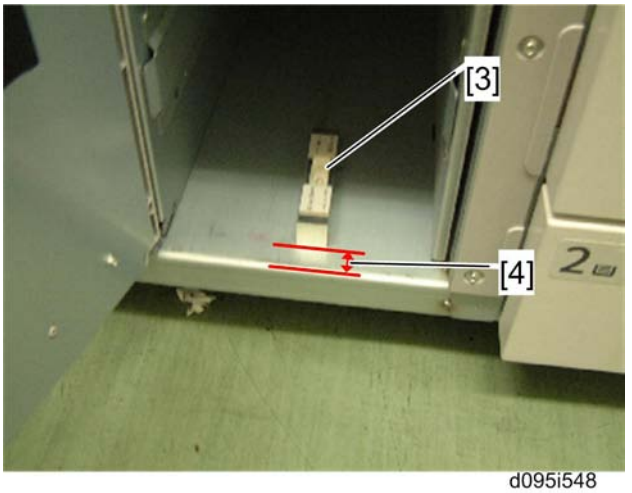

d095i548

4. Place the leveling device [3] in 20 mm [4] from the bottom edge of the waste toner bottle housing as shown above.
5. Check the level and adjust the four feet to keep the machine level.
   - Front to rear: Less than 2.5 mm (0.1")/1,000 mm away from level

   If the front side is lower than the rear side:

   Lift the front side of the machine by adjusting both feet at the front side only. Do not adjust both sides' feet (front and rear) at the same time.

   If the front side is higher than the rear side:

   Lift the rear side of the machine by adjusting both feet at the rear side only. Do not adjust both sides' feet (front and rear) at the same time.

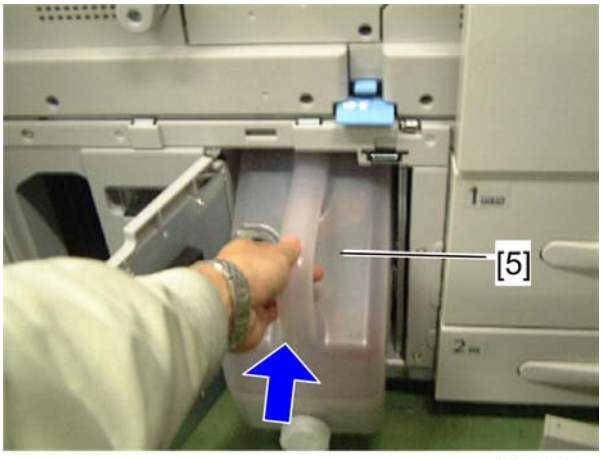

d095i547

6. Install the waste toner bottle [5] in its housing.
7. Close the waste toner bottle door.
8. Close the left and right front doors.
9. Close the rear controller box (x 4: upper x 2, lower x 2).
10. Reattach the rear top cover (x 3).

Internal Tape and Packing Material

1. Open the front left and right doors.

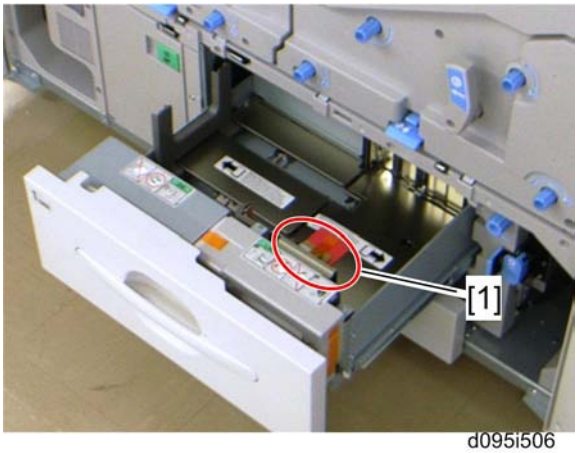

d095i506

2. Open tray 1.
3. Remove the bracket [1] with the red tag (x 1).
4. Remove all strips of tape and retainers.
5. Close tray 1.

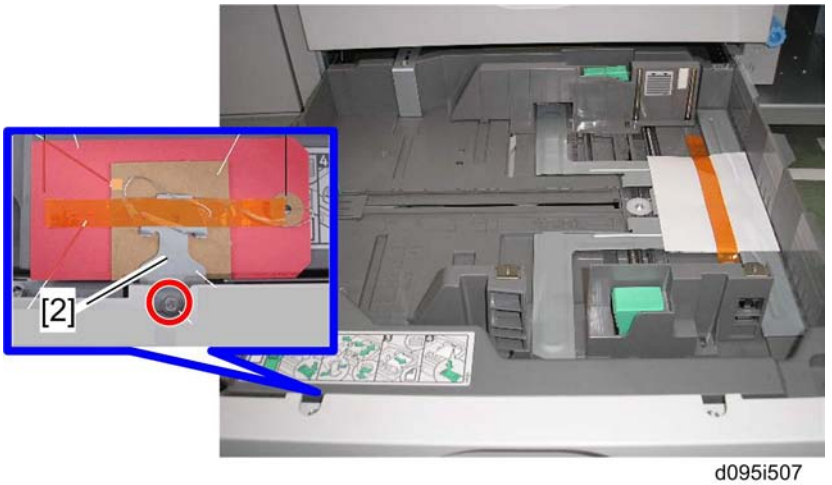

d095i507

6. Open tray 2.
7. Remove all strips of tape.
8. Remove the bracket [2] with the red tag (x 1).
9. Close tray 2.
10. Press down the lock lever of the fusing drawer unit, and then pull out the fusing unit.

d095i508

11. Remove all tape and retainers from the fusing drawer unit.
12. Push in the fusing drawer unit.
13. Press down the lock lever of the registration drawer unit, and then pull out the registration drawer unit.

d095i509

14. Remove all strips of tape, tags, and retainers from the registration unit.

Install the Toner Bottles

Note

- The toner bottles contain pre-mixed developer.

g178i510

1. Open the toner hopper door.
2. Install the toner bottles in the toner bottle tank.

   Note

   - Shake each toner bottle several times before installing in the toner bottle tank.
3. Close the toner hopper door.

Installing the Operation Panel Unit

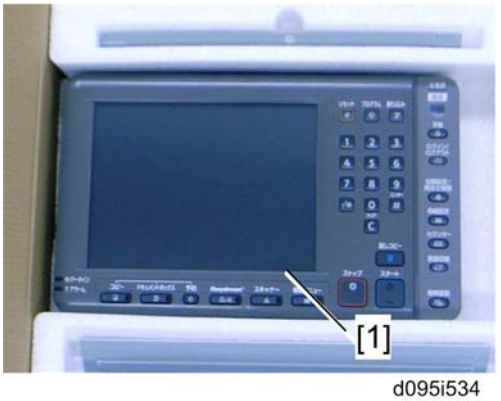

d095i534

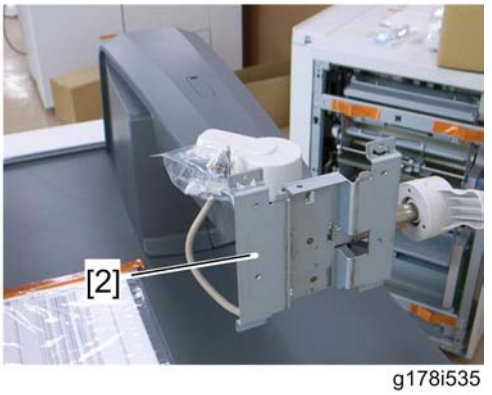

g178i535

1. Take the operation panel unit [1] from the accessory box.
2. Set the operation panel unit on the operation panel bracket [2].

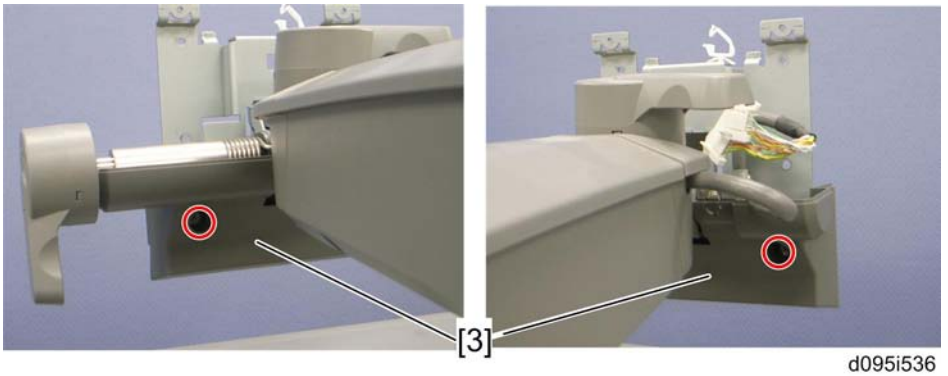

d095i536

3. Attach the operation panel lower cover [3] to the operation panel bracket (x 2).

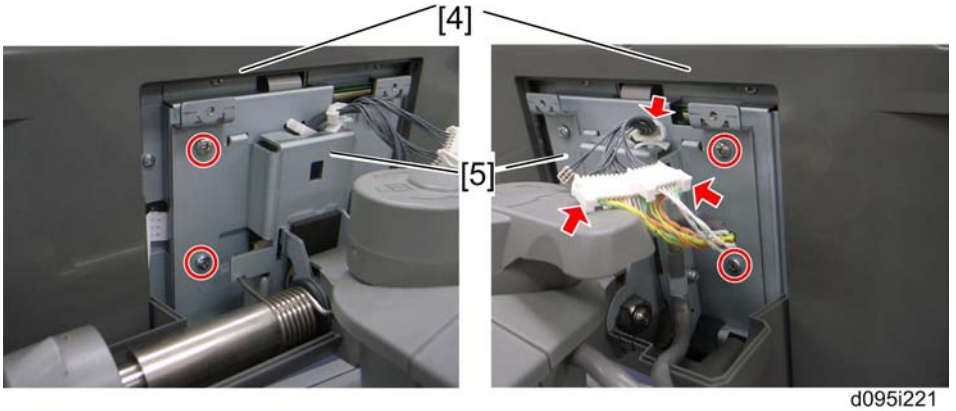

d095i221

4. Hang the operation panel [4] on the operation panel bracket [5].

5. Secure the operation panel and connect two connectors to the relay connectors from the mainframe (x 4, x 1, x 2)
   - The three-pin harness in these harnesses of the operation panel is not used.

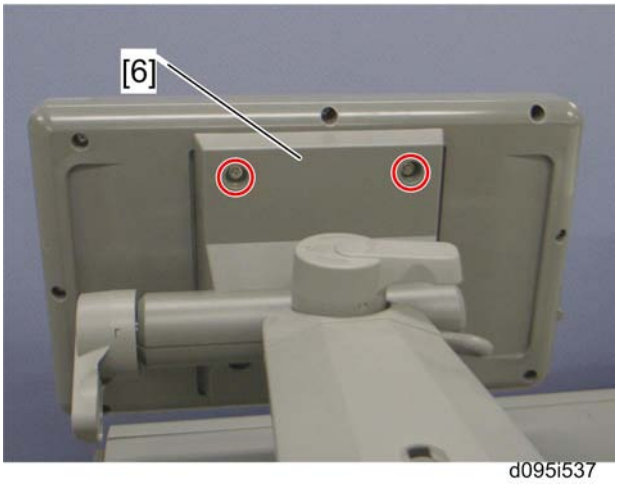

6. Attach the operation panel upper cover [5] (x 2 each: M4x6).

Keytop Adjustment

Only for Pro C901, the keytop adjustment is required depending on the model's destination. See the keytpo configuration for each model below.

For NA and AA models:

Fiery Controller	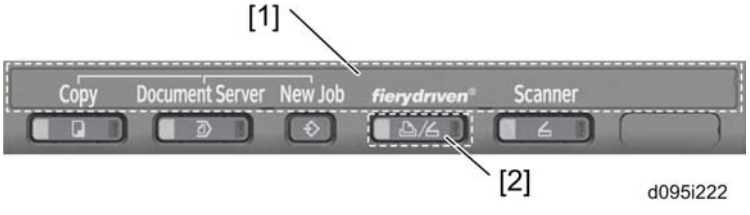
Other	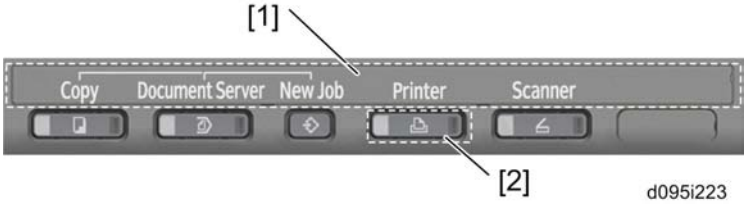

- Remove the blank keys, and then install the function name plate [1] and controller function key top [2].

For EU models:

Fiery Controller	
Other	

- Remove the blank key, and then install the controller function key top [1].

Attaching the Ground Plate

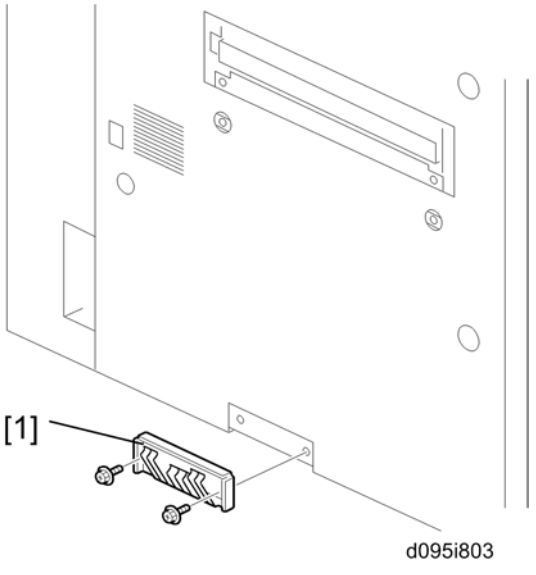

1. Attach the ground plate [1] to the left bottom of the mainframe (x 2).

Important

- **If the Perfect Binder RB5000 (D391) is to be attached to the mainframe directly, do not attach the ground plate [1].**

Installing the Attention Light

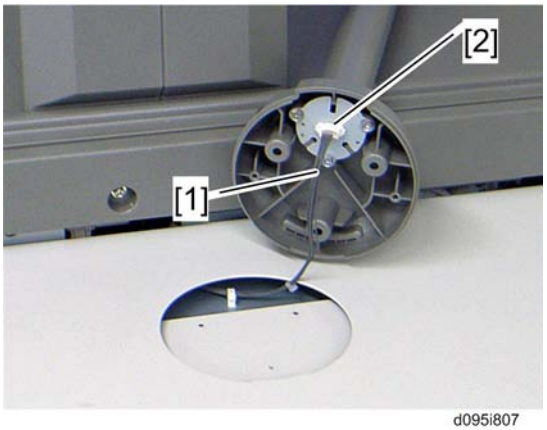

d095i807

1. Connect the cable [1] from the controller box of the mainframe to the connector [2] of the attention light.

d095i808

2. Stand the attention light [3] on the top of the controller box, and then fasten the attention light (x 3; M3x8).

Connecting the Upper and Lower Tray Heaters

The machine comes from the factory with the tray heaters already installed but disconnected. Tray heater connection is optional. The heaters should be connected if the location has high temperature and high humidity.

Consult with the customer before connecting the tray heaters.

Doing this procedure connects the following tray heaters inside the mainframe at the following locations:

- One unit below the tandem tray
- One unit below tray 2

- One unit below the lower tray of the optional LCT

There are two ways to connect the tray heaters. If coated paper is mainly used, connect the tray heaters connector to "CN606".

	Engine ON	Engine OFF
Connecting to CN602	Tray heaters: OFF	Tray heaters: ON
Connecting to CN606	Tray heaters: ON	Tray heaters: ON

Note

- "Engine ON" is "Low Power Mode", "Stand-by Mode" and "Engine Operating".
- "Engine OFF" is "Main Power OFF", "Operation Switch OFF" and "Sleep Mode".

1. Switch off the main power switch and disconnect the power cord from the power source.

   (Refer to page 58 "Correct Procedure to Turn Off the Power " in "Installation Requirements" for how to turn off the machine without causing damage to the components.)

2. Open the rear controller box (☛page 354).

   To set the connector

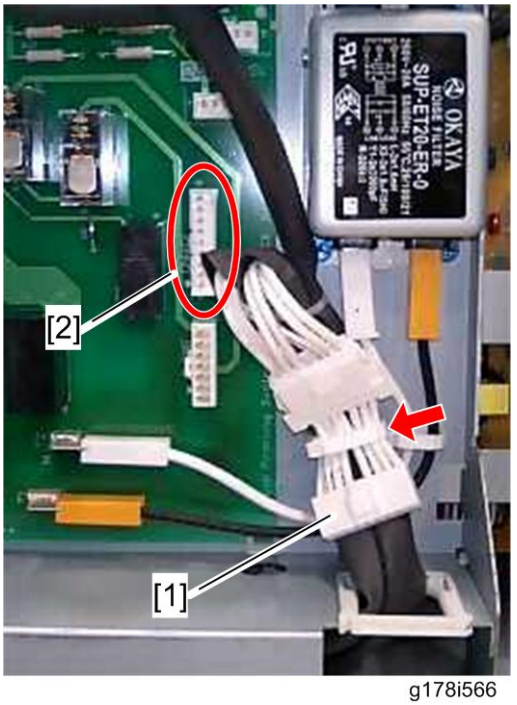

g178i566

3. Release the heater harness [1] (☞ x 1)
4. Connect the white connector [1] to CN602 [2].

To connect the tray heaters connector to CN606

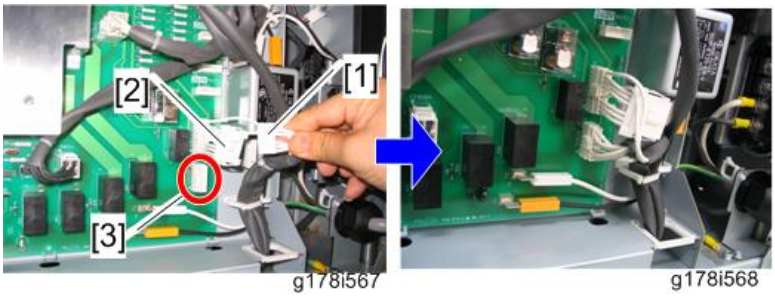

5. First, connect the tray heaters connector to CN602 (see the procedure above).
6. Disconnect the 7-pin connector [1] from the relay connector (9 pins) [2].
7. Connect the 7-pin connector [1] to CN606 [3].

Connecting the LCT-MF (D095 only)

⚠CAUTION

- Turn off the machine and unplug it from the power source before you start the installation procedure. (☛page 58 "Correct Procedure to Turn Off the Power ")
- When removing the LCT-MF from the mainframe, make sure that all cables and harnesses of the LCT-MF to the mainframe are disconnected.

Preparing for LCT-MF Installation

Outside of the ADF

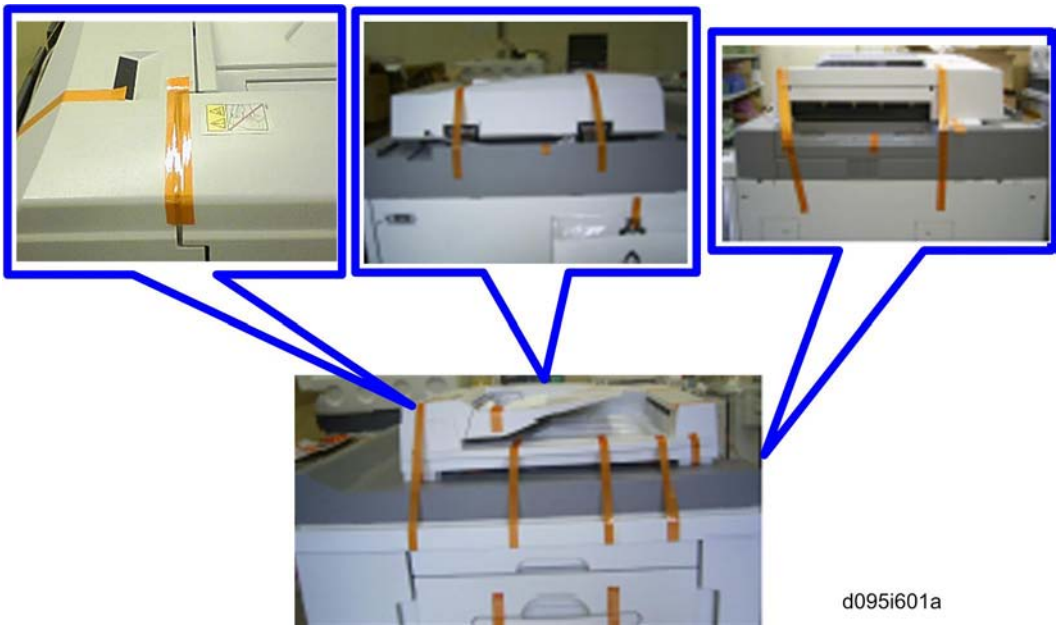

1. Remove all tapes on the ADF.

IF Cable and Feed Unit

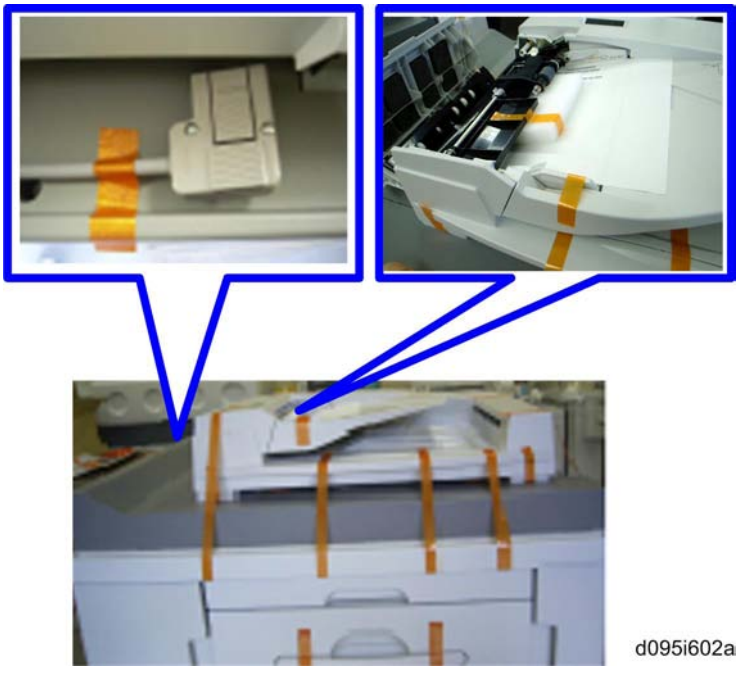

1. Remove the retainer in the ADF and the tape on the I/F cable.

   Under the ADF

d095i603a

2. Open the ADF, and then remove all tapes and retainers under the ADF and the tapes on the exposure glass.

LCT-MF

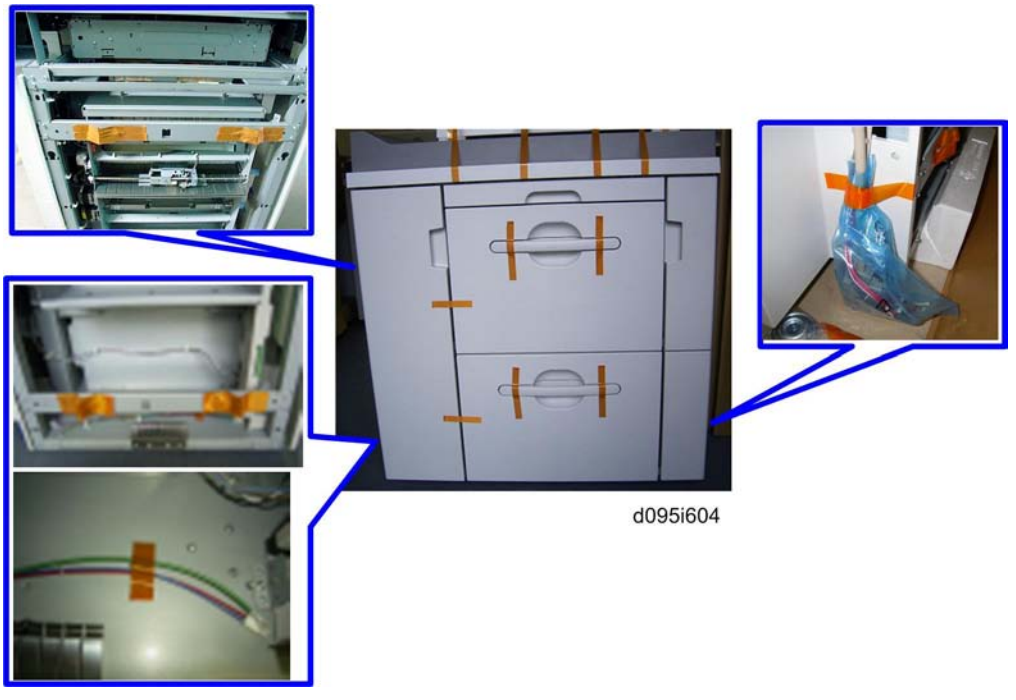

1. Remove all tapes and retainers on the LCT-MF.

In the Tray of the LCT-MF

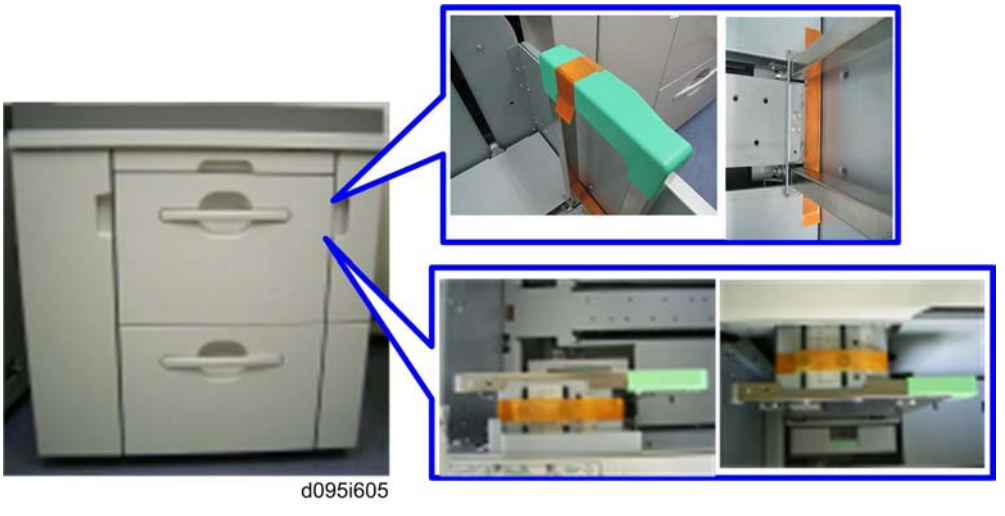

2. Remove all tapes in the upper and lower trays of the LCT-MF.

Inside the Front Left Cover of the LCT-MF

d095i606a

3. Remove all tapes inside the front left cover of the LCT-MF.

Connecting LCT-MF

4. Remove the covers from the right side of the mainframe.
   - Cover [A]: (x 1), others: (hooks)

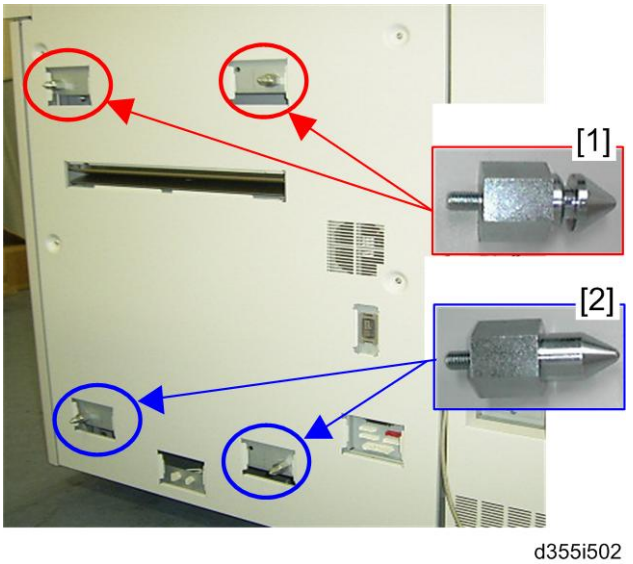

5. Install the upper pins [1] with the grooved rings on the right upper cover.
6. Install the lower pins [2] on the right lower cover.

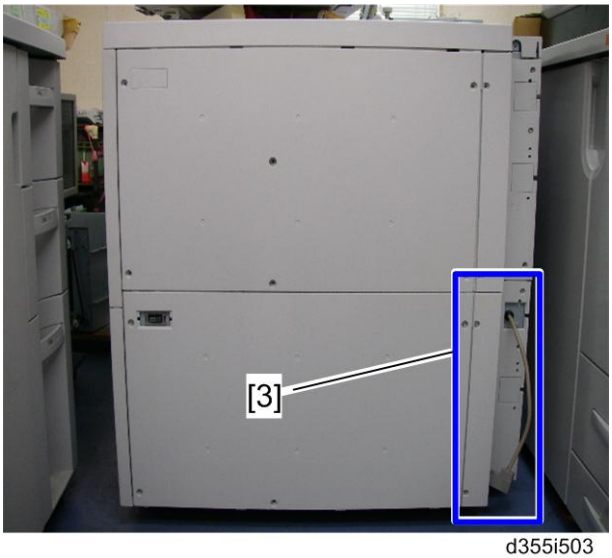

d355i503

7. Remove the lower rear left cover [3] of the LCT-MF (x 5)

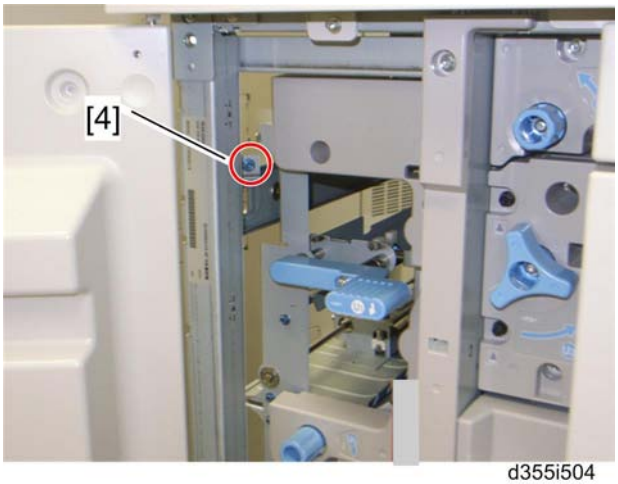

d355i504

8. Open the front door of the LCT-MF and remove screw [4].

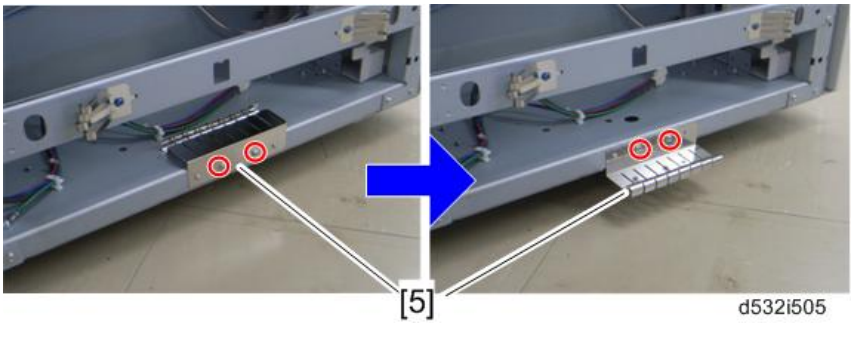

d532i505

9. Remove the ground plate [5] (x 2).

10. Turn over the ground plate and use the screws to fasten it to the same holes (x 2).

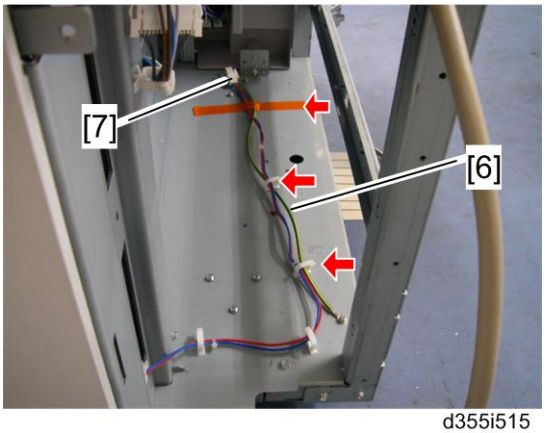

d355i515

11. Release the ground cable [6] (tape x 1, x 2).
12. If the tray heater will not be used, keep the LCT-MF tray heater relay harness [7] clamped.

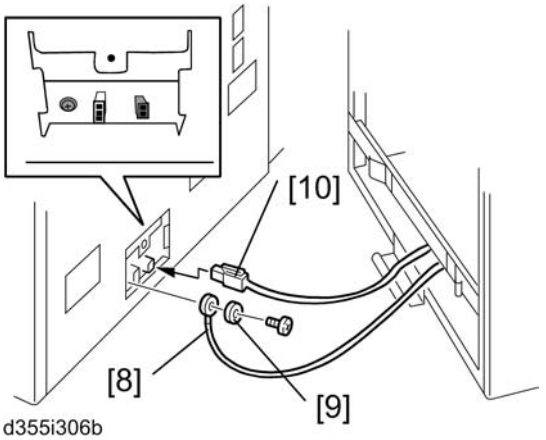

d355i306b

13. Move the LCT-MF to the right side of the mainframe.
14. Fasten the ground cable [8] with the washer [9] to the mainframe (x 1).
15. If the tray heater of the LCT-MF will be used, attach the LCT-MF heater relay harness [10] to the mainframe.

Important

- **If the customer will use coated paper in high temperature and high humidity conditions, the tray heater of the LCT-MF is greatly needed. Connect the LCT-MF relay harness at this moment.**

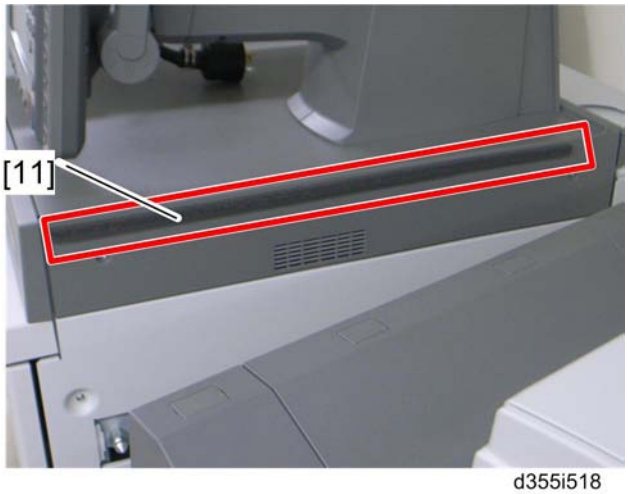

d355i518

16. Attach the cushion [11] to the top right side of the mainframe.
17. Align the LCT-MF on the joint pins and then move the LCT-MF much closer.
18. Dock the LCT-MF with the right side of the mainframe, after confirming that the ground cable and LCT-MF tray heater relay harness are not pinched between the LCT-MF and the mainframe.

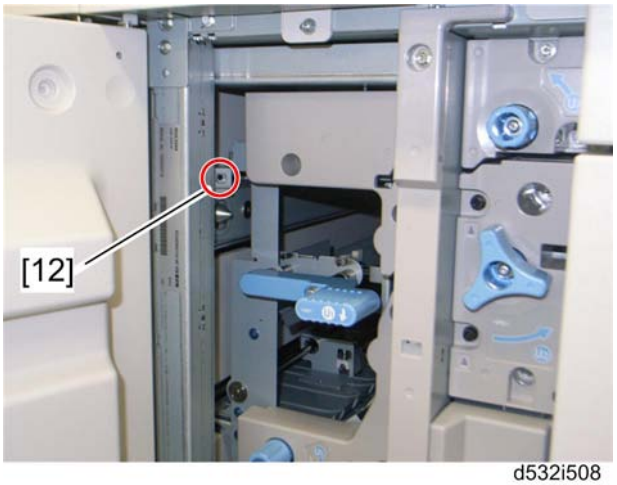

d532i508

19. Fasten screw [12] to lock the LCT-MF to the side of the mainframe.
20. Close the front door of the LCT-MF.
21. Reattach the lower rear left cover to the LCT-MF (x 5).

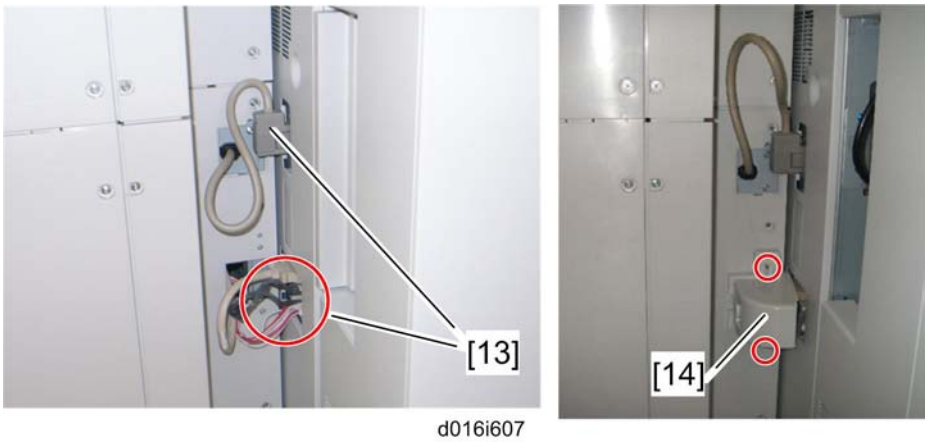

22. Attach I/F connectors [13] of the LCT-MF to the mainframe.

⚠ CAUTION

- When removing the LCT-MF from the mainframe, make sure that all cables and harnesses of the LCT-MF to the mainframe are disconnected.

23. Attach the IF connector cover [14] (x 2: M4x16).

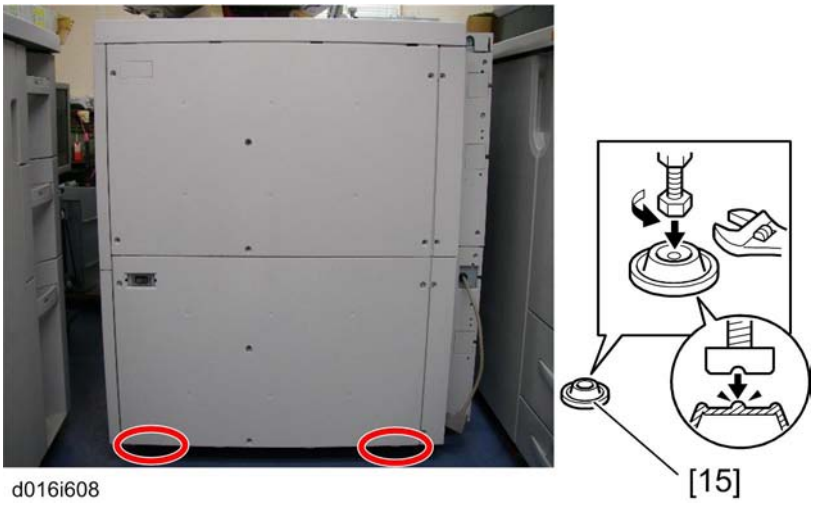

24. Insert the leveling shoes [15] (x 4) under the leveling feet and level the LCT-MF.
25. Adjust the LCT-MF level within ±5 mm by rotating each nut on the leveling shoes.

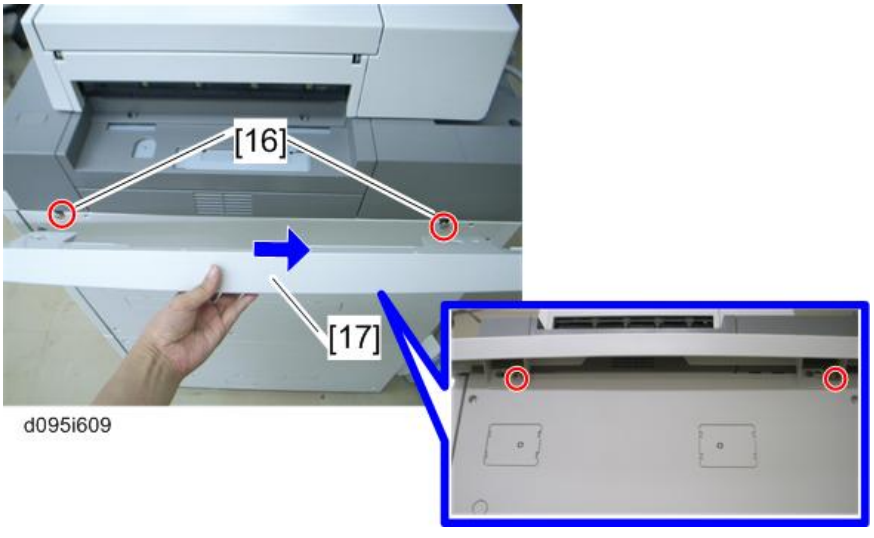

d095i609

26. Attach the stud screws [16] to the right side of the LCT-MF.
27. Attach the top right cover [17] (x 2: M4x20).

Note

- Do not install the stud screws [16] and top right cover [17] if the optional LCT (D532) is to be installed in addition to the LCT-MF.

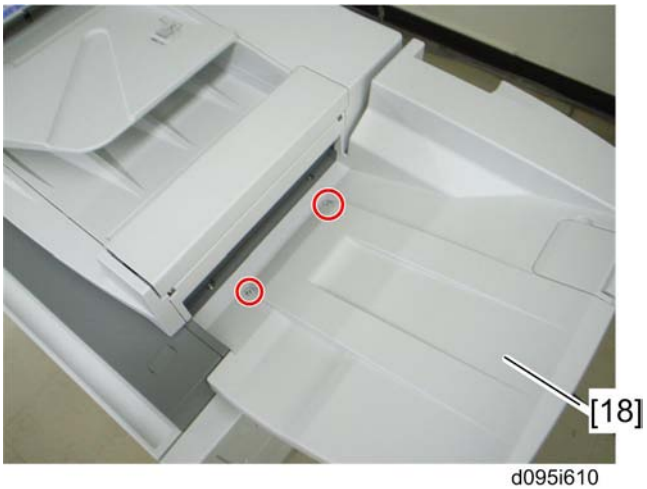

d095i610

28. Attach the original output tray [18] (x 2: M4x8)

d095i611

29. Connect the I/F cable [19] of the ADF to the LCT-MF.

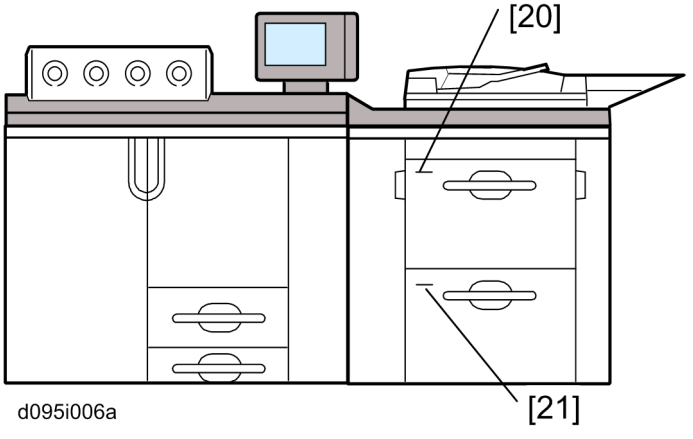

d095i006a

30. Attach the "Tray 3" decal above the line [20] on the LCT-MF and the "Tray 4" decal above the line [21].

Note

- When attaching these decals, align the bottom edge of each decal with the line on the each tray cover.

31. Change the tray size with User Tools (Tray Paper Settings).

Testing the Breaker Switch and Attaching the Caution Decal

This machine has two breaker switches at the left side of the controller box. Two switches are used as follows:

- For Main: This interrupts the DC power to the mainframe.
- For Heater: This interrupts the power to the fusing unit. (SC547)

1. Plug the power cord into its power source.

⚠CAUTION

- Do not turn on the copier. The copier should be off.

2. Use the tip of a small screwdriver to push the breaker test button.

   The breaker switch should flip to the "O" position. This indicates that the breaker switch is operating normally.

   If the breaker switch does not flip to the "O" position, the switch must be replaced.

3. Raise the switch to the "|" position for normal operation.

   Important

   - **The copier will not turn on if the breaker switch is not returned to the "|" position.**

Connecting to the Controller

1. Place the controller on a flat floor.

   Note

   - For details about the installation requirements for the controller, refer to the service manual for each controller.

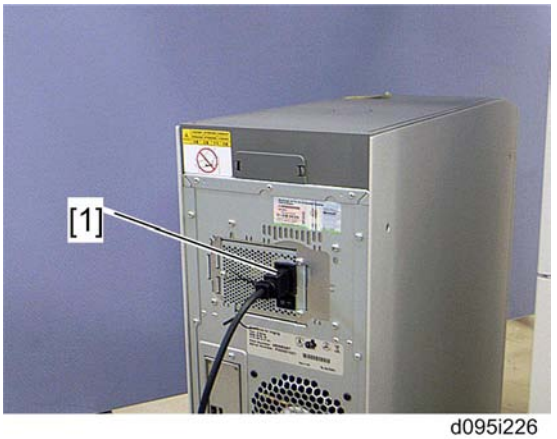

d095i226

2. Connect the power cable [1] to the power cord socket on the rear side of the controller.

Important

- Only use the power cord that is provided with the controller or an appropriate replacement power cord available from an authorized provider.

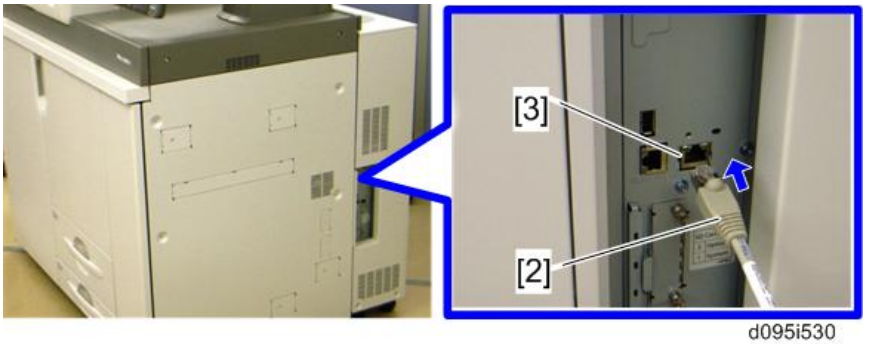

d095i530

3. Connect the LAN cable [2] to the Gigabit Ethernet slot [3] at the right-rear.

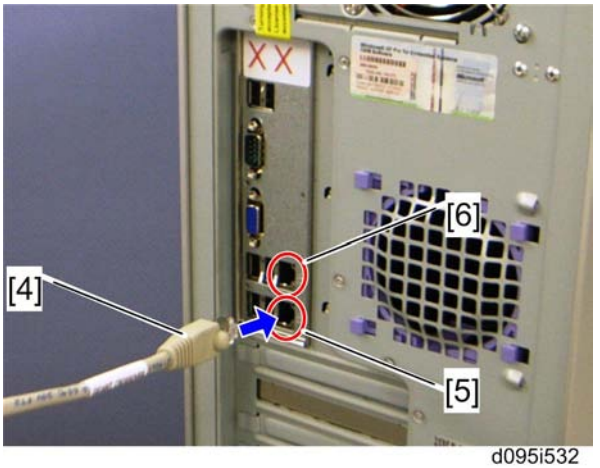

d095i532

4. Connect the LAN cable [4] from the mainframe to the lower network cable slot [5] of the controller.
5. Connect the cable from the client network to the upper network cable slot [6] of the controller.

Turn on the Machine Power

1. Turn on the main power switch of the machine.
   - To access this switch, you must open the front left door.
2. Enter SP2253-006 with the front left door open.
3. Press "Execute" to transport toner to each sub-hopper.
   - It may take several minutes (approximately 5 to 10 min.) to fill the sub-hoppers.
4. Exit the SP mode after "Completed" is displayed.
5. Close the front left door. Machine warm-up starts automatically, followed by process control.

   Note

   - Do not turn off the machine during the warm-up. It takes about 6 minutes to complete this process.
6. "Ready" appears on the LCD after the warm-up is complete.

Controller Selection

1. Select a controller to be used with SP5-193-001.
   - For Fiery controller, select "6" with SP5-193-001.
   - For Creo controller, select "5" with SP5-193-001

Important

- **Never select "0" with SP5-193-001. If you do so, the machine cannot do any operations without the special recovery procedure. For details about the special recovery procedure, see Operation Error after Controller Selection**

Fiery Language Selection

If a customer wants to use a language other than English to operate the Fiery controller, the language selection must be done first. To select a different language, the Fiery system must be re-installed. For details, see "page 712 "Fiery Controller System Update"" in the section "Service Tables" (Fiery System Installation < Firmware Update < Service Tables).

Fiery Controller Settings

After turning on the power for the first time, it is required to set the settings for the "Fiery Controller".

1. Check that the Activity light on the LCD of the Fiery Controller is flashing green and then go to the machine's operation panel.
2. "Please wait" may be shown on the operation panel.
3. Press the "Fiery" tab on the LCD after the Fiery operating menu has appeared.
4. Press the "Setup" button on the operation panel.
5. The "Login" screen appears.
6. Press the "Password" button, and the soft key pad screen appears.
7. Input "Fiery. 1" with the soft key pad, and then press the "OK" button.

Note

- When the password is input, capital letters and small letters must be correctly input. Use the "Shift" button to input a capital letter.

8. The setup screen appears after you input the password correctly.

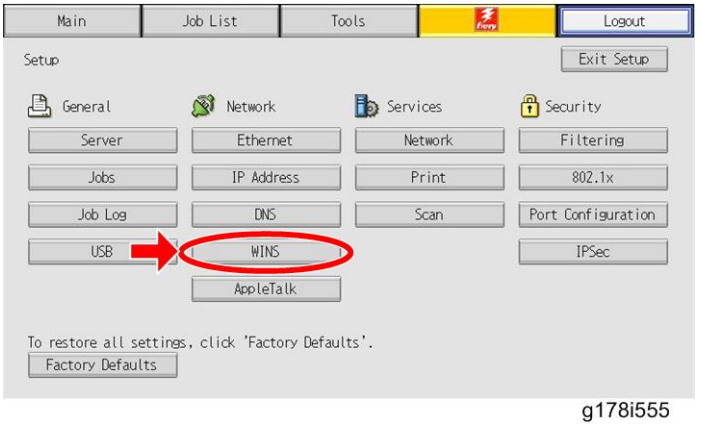

g178i555

9. Press the "WINS" button.

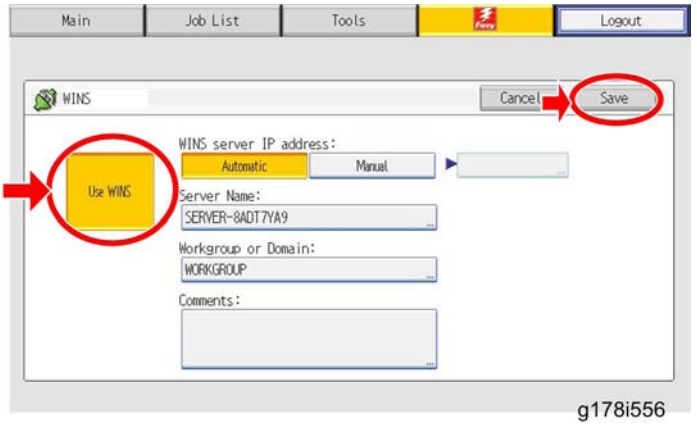

g178i556

10. Press "Use WINS" to disable this function, and then "Save".

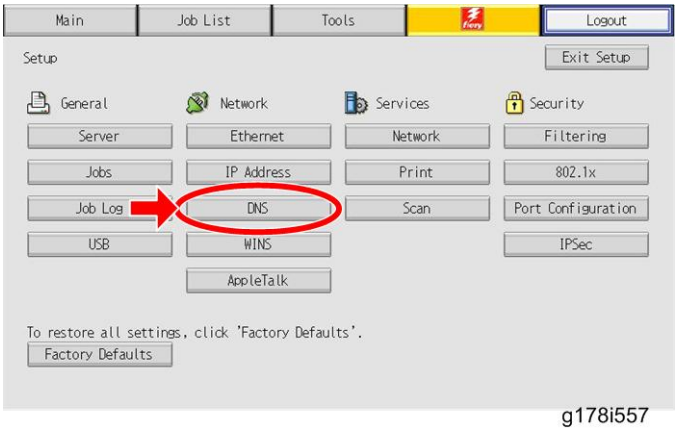

g178i557

11. Press the "DNS" button.

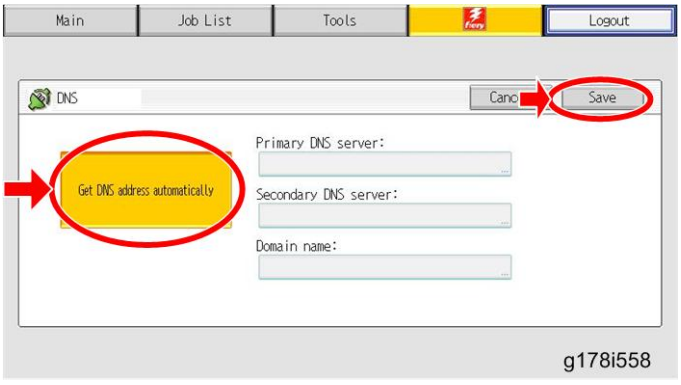

g178i558

12. Press "Get DNS address automatically" to disable this function, and then press "Save".

Note

- If "Get DNS address automatically" is correctly disabled, the button color is changed from yellow to gray-out.

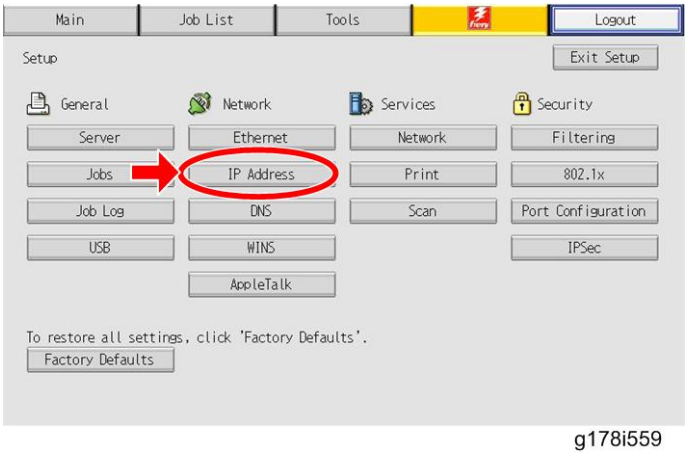

g178i559

13. Press "IP Address" to enter the IP address.

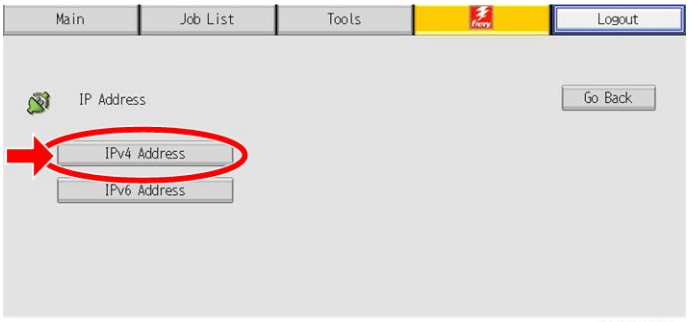

g178i560

14. Press "IPv4 Address".

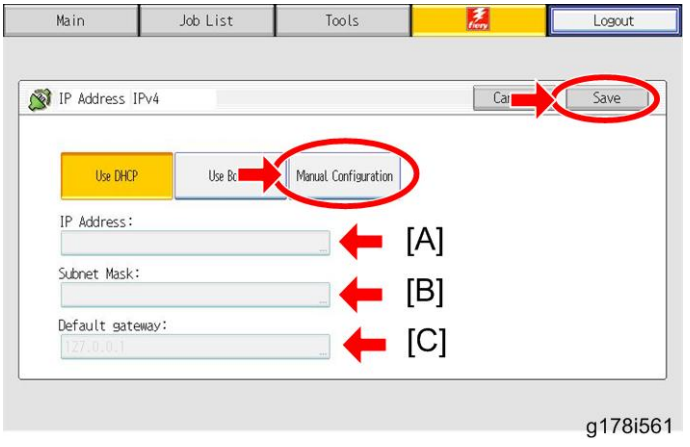

g178i561

15. Press the "Manual Configuration" button.
16. Press the "IP Address" bar [A] to enter the IPv4 address, and then enter the IPv4 address.
    - The soft key pad screen appears after pressing the "IP Address" button. Input the IP address with the soft key pad, and then press the "OK" button.
17. Press the "Subnet Mask" bar [B] to enter the subnet mask IP, and then enter the subnet mask IP.
    - The soft key pad screen appears after pressing the "Subnet Mask" button. Input the IP address with the soft key pad, and then press the "OK" button.
18. Press the "Default gateway" bar [C] to enter the default gateway IP, and then enter the default gateway IP.
    - The soft key pad screen appears after pressing the "Default gateway" button. Input the IP address with the soft key pad, and then press the "OK" button.
19. Press the "Save" button after IP address setting has been completed.
20. Press the "Go Back" button, then the "Exit Setup" button.

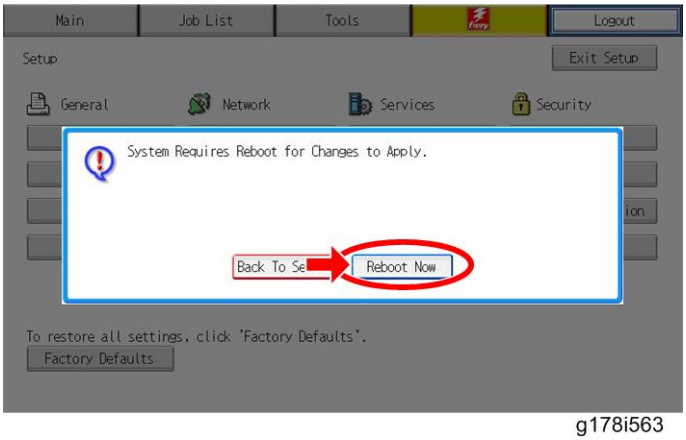

g178i563

21. Press the "Reboot Now" button.
22. The Fiery server and copier system automatically turn off to reboot.

Paper Library Data

Install the Paper Library data using the following procedure.

Paper Library Updating Procedure

1. Make a folder in the directory of an SD card, and then name the folder "mqp".
2. Copy the paper data base file in the "mqp" folder, and then rename the copied file "library.mqp".
3. Make sure that the mainframe is turned off.
4. Insert the SD card which has the "library.mqp" file in the upper SD card slot on the controller.
5. Turn on the mainframe.
6. Make sure that the data version of the SD card is newer than the data version of the flash ROM on the controller. If not, prepare the latest data version of the Paper Library on an SD card.
   - The version of the data on the SD card can be checked with SP5711-202
   - The version of the data in the flash ROM on the controller can be checked with SP5711-201.

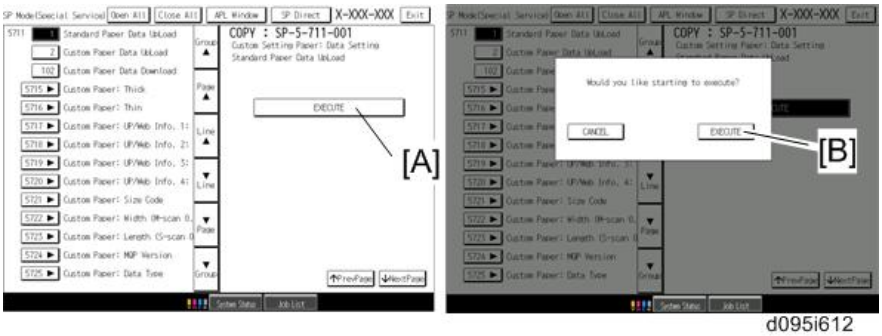

d095i612

7. Enter SP5-711-001, and then press "Execute" [A] on the LCD.

8. Press "Execute" [B] again on the LCD.

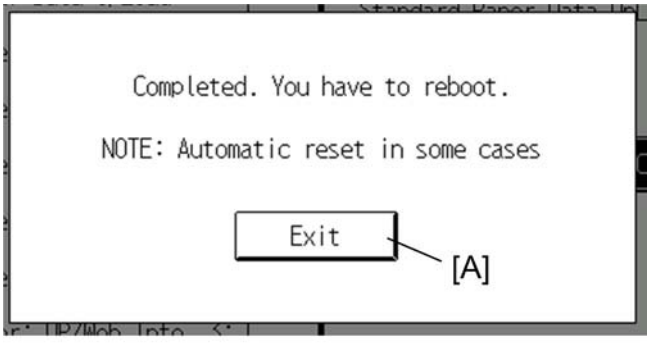

d095i613

9. Press "OK" [A] on the LCD after the "Completed." pop-up is displayed, and then exit the SP mode.
10. Turn off the mainframe after updating, and then remove the SD card from the upper SD card slot of the controller.
11. Turn on the mainframe, and then check the Paper Library data version with SP5-711-201 (Flash Rom).

TCRU Setting

1. If the installed machine is to be operated by TCRU, change the following SP settings.
   - SP5-062-001: Change the setting from "1" (Not displayed) to "0" (Displayed).
   - SP7-956-001: Change the setting from "0" (No operation) to "1" (Operation).

   Important

   - **If these settings are not correctly set, the PM parts alarm never appears on the LCD.**
2. If the fusing unit is set for the target unit of TCRU operation, change the following SP setting.
   - SP7-957-001: Change the setting from "1" (Not target) to "0" (Target).

Load the Paper Trays

For each paper tray:

1. Move the side fence and bottom fence to the correct positions for the paper.
2. Add paper to the trays.
3. Attach the paper size decals to the front of the paper cassette trays and the tandem tray.

Note

- It is not necessary to input the paper size setting for tray 2. This is detected automatically.

Print an SMC Report

1. Go into the SP mode.
2. Do **SP5990-1** to print a full SMC report. Keep it in a safe location, with the factory setting sheet.

Checking the Print Quality

It is necessary to check the print quality after installation, and before the customer starts to use the machine. Check the following points and adjust the machine if there is a problem.

Note

- "T6000 (70W)", "mondi 90gsm" or "Hammermill Color COPY 105gsm" paper is recommended for checking the output quality. If T6000 (70W), "mondi 90gsm" or "Hammermill Color COPY 105gsm" paper is not available, use an equivalent quality of these paper.
- Select the proper paper type in the paper type selection when checking the print quality. For details, see the "T6000 (70W) Paper Selection Procedure" described below.

T6000 (70W) Paper Selection Procedure

1. Press the "Tray Paper Settings" button on the operation panel.

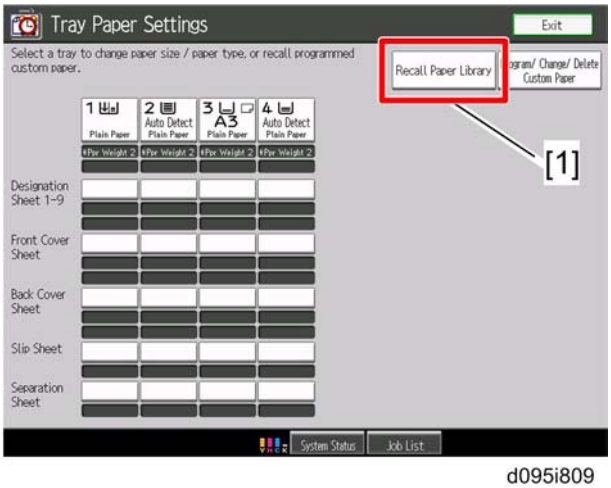

d095i809

2. Press "Recall Paper Library" [1] on the LCD.

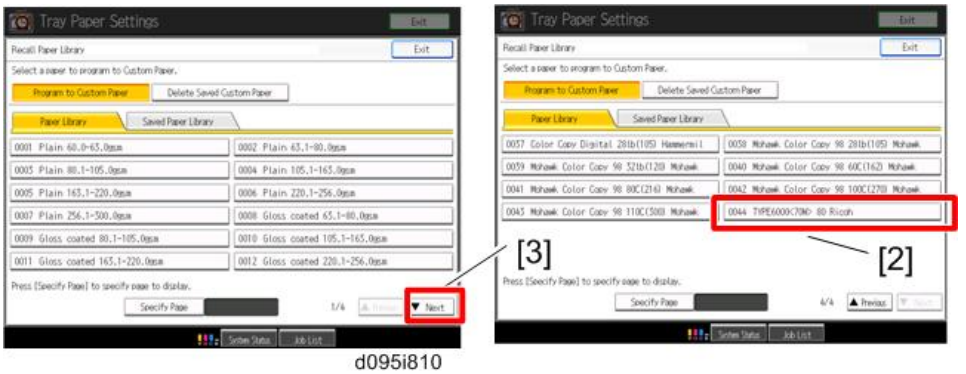

d095i810

3. Select "0044 TYPE6000<70W> 80 Ricoh" [2] with the "Next" [3] at the bottom-right of the LCD.
4. Press "0044 TYPE6000<70W> 80 Ricoh" [2].

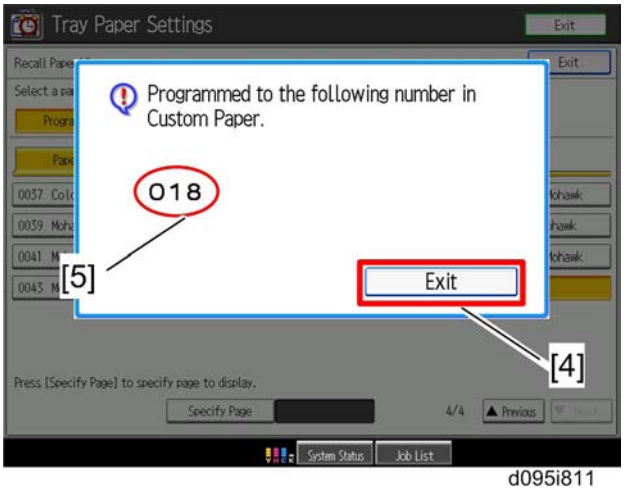

d095i811

5. The paper registration completion pop-up appears on the LCD.
6. Press "Exit" [4] on the LCD.
   - In this procedure, the customer paper setting number is “18” as shown above. However, the registered number [5] depends on how many customer paper settings have already been registered.

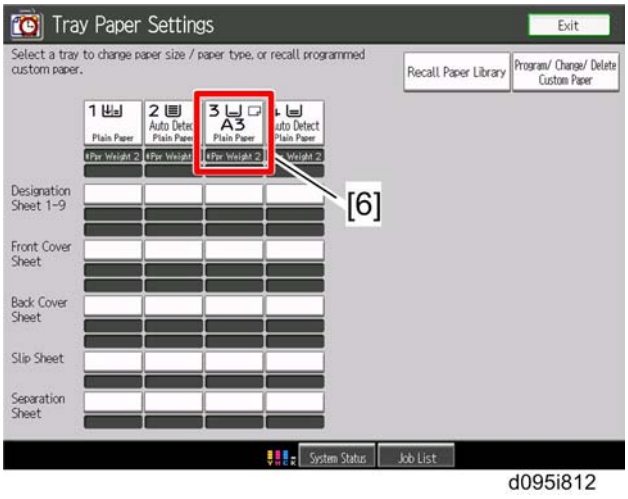

d095i812

7. Select a tray for the T6000 (70W) paper, and then press it [6] on the LCD.

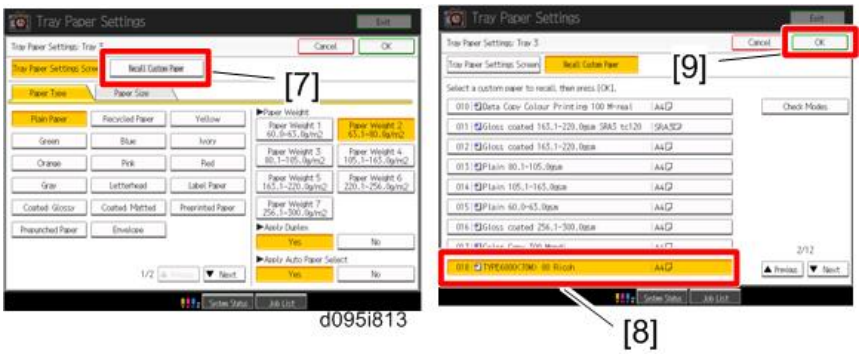

d095i813

8. Press "Recall Custom Paper" [7] on the LCD.
9. Select "018 TYPE6000<70W> 80 Ricoh" [8], and then press "OK" [9] on the LCD.

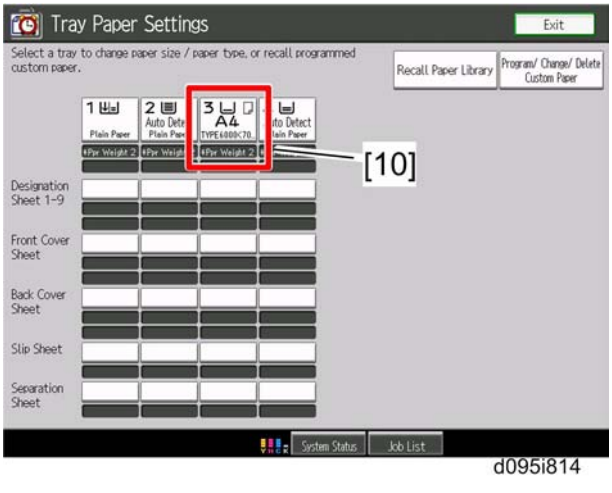

d095i814

10. The paper setting screen on the LCD is displayed as shown above after completing the tray setting for TYPE6000<70W>. Check if the paper setting [10] has been changed correctly.

- **Color Image Check**

  Check that the PS test page has a solid color without imperfections (not blotched or scratched).

  Check that the density differences in the PS test pattern are clearly visible. (See Color Image Check in the chapter "Replacement and Adjustment")

- **Color Registration Check**

  Check that the grid lines on the test pattern are superimposed correctly.

  (See Color Registration Check in the chapter "Replacement and Adjustment")

- **Ruled Line Check**

  Check that the grid lines on the test pattern are not scratched.

  (See Ruled Line Check in the chapter "Replacement and Adjustment")

- **Image Shift Check between 1st and 2nd Pages**

  Print a test pattern and fold it in half vertically and horizontally. Check that the vertical and horizontal center lines on the printed test pattern are not shifted with respect to the fold lines.

  (See Image Shift Check between the 1st and 2nd Pages in the chapter "Replacement and Adjustment")

- **Image Skew Check**

  Check the distance between the image edge and paper edge at two points in the main-scan direction and two points in the sub-scan direction.

  (See Image Skew Check in the chapter "Replacement and Adjustment")

Make a Test Color Print (D095 only)

1. Make sure that A3 or DLT paper is in one of the trays.

   Note

   - Use the same type of paper that the customer normally uses for color outputs.

2. Put a "Color Chart C-4" on the exposure glass.
3. Select the full color mode and print one copy of the chart. You will use this in the ACC procedure, if ACC is necessary.
4. Check the results of the copy with the customer.
   - If the quality of the color is satisfactory, ACC adjustment is not necessary.
   - If the quality of the color is not satisfactory, do the ACC adjustment described below.

ACC (Automatic Color Calibration) Adjustment (D095 only)

Automatic color calibration is done at the factory with the procedure given below. Do this procedure only if the color quality is not satisfactory for the customer.

1. Push [User Tools].
2. To print a color pattern, select Maintenance> Auto Color Calibration
3. Touch "Start".

Machine will start self-check before printing test pattern Press [Start Printing].

4. Touch "Start Printing".

Now self-checking. Test pattern will be printed. Please wait.

   The machine does process control, then it prints a test pattern.

Place Test Pattern on the exposure glass correctly. Then press [Start Scanning]

5. Remove the C-4 test chart from the exposure glass (this was put on the exposure glass during the previous procedure 'Make a Test Color Print').
6. Place the color test pattern face-down (this is the test pattern that you made in step 4) and 10 sheets (no-image) of paper on the color test pattern. The arrow and notation ("Face down and align the arrow with the rear left corner of the exposure glass.") must be at the rear left corner.
7. Touch [Start Scanning] on the display. The machine scans the pattern one time.

Scanning... Please wait.

   If you see this error:

Scanning failed. Place test pattern on the exposure glass correctly. Then press [Start Scanning].

   Make sure that the arrow on the test pattern is in the upper left corner of the exposure glass.

8. Remove the pattern from the exposure glass and replace it with the C-4 Color Chart.
9. Touch "Exit" three times to return to the Copy mode screen.
10. Make a full-color copy of the test chart.
11. Compare the results of the 1st copy (made in step 3 of "Make a Test Color Print") and the 2nd copy (made in step 10 above):

    If the results of the 2nd copy are better than the results of the 1st copy, you are finished.

    -or-

    If the results of the 2nd copy are worse than the results of the 1st copy:

    - Push the [User Tools] key
    - Touch Maintenance> Auto Color Calibration> Previous Setting.
12. Remove the color chart from the exposure glass.
13. If the customer is not satisfied with the 1st copy or the 2nd copy, you must do the "Checking the Print Quality" procedure again.

Color Registration Procedure for MUSIC

1. Push [User Tools].
2. Touch [Maintenance]> [Color Registration].
3. Touch [OK].

   This completes color registration.

Rear Controller Box Removal

Remove the rear controller box only if the machine is too large to pass through a narrow door or passageway.

Rear Controller Box Removal

⚠CAUTION

- The rear controller box is unstable when it is removed from the mainframe. The removed rear controller box can easily fall down. Be careful of this if you place the controller box in a separate location.

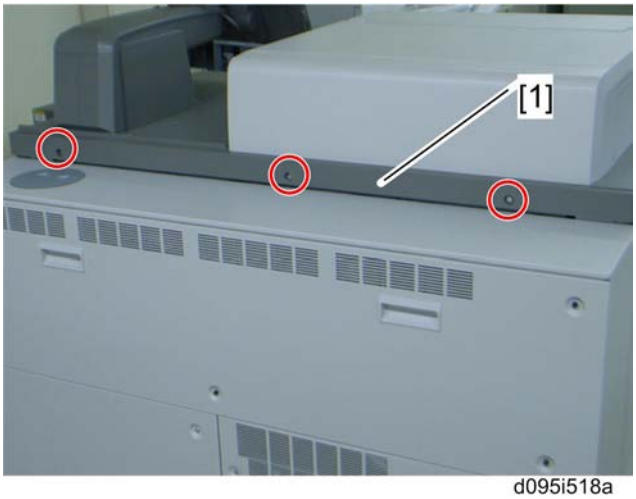

d095i518a

1. Remove the rear top cover [1] (x 3)

d095i518

2. Remove the two screws attaching the rear controller box to the mainframe.

d095i519

3. Loosen the fixing pins at rear right and left bottom with a minus flat-headed screwdriver or hex driver (5.5mm).
4. Open the rear controller box, while holding the right side (viewed from the rear).

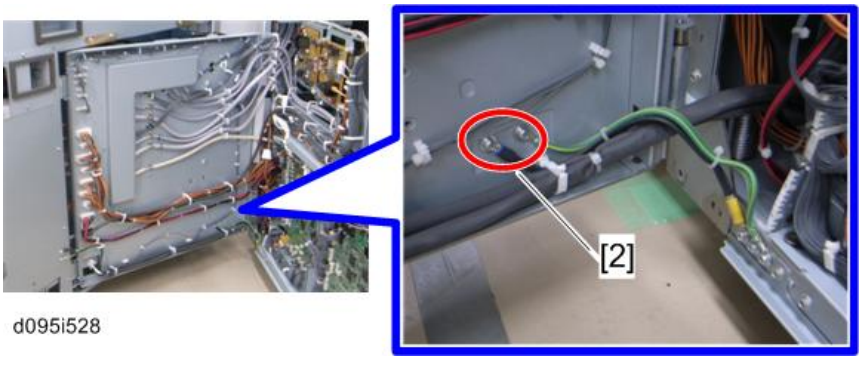

d095i528

5. Remove two ground cables [2] (x 1 each).

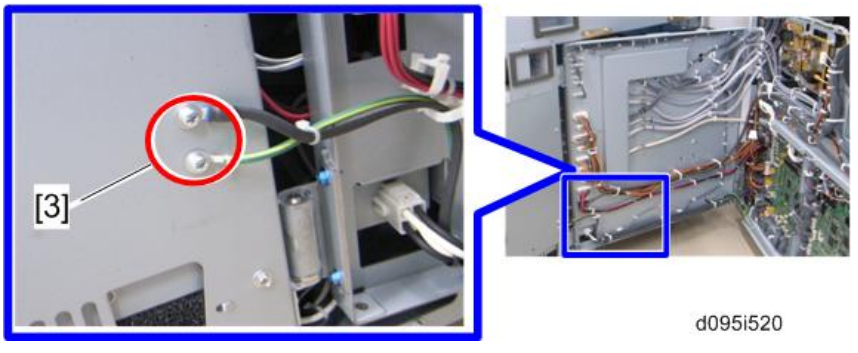

d095i520

6. Remove two ground cables [3] (x 1 each).

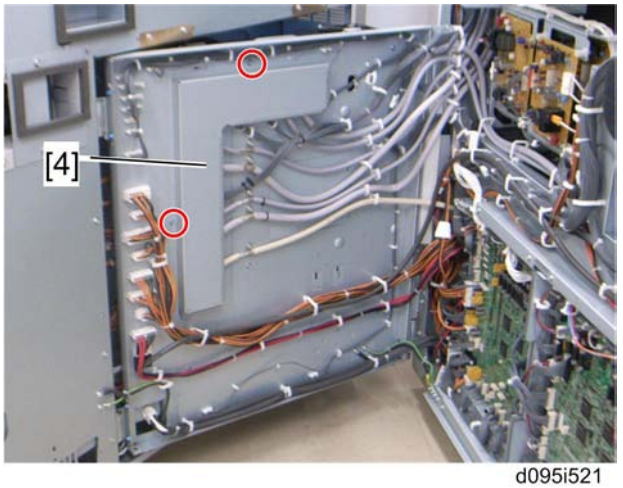

d095i521

7. Connector cover [4] (x 2).

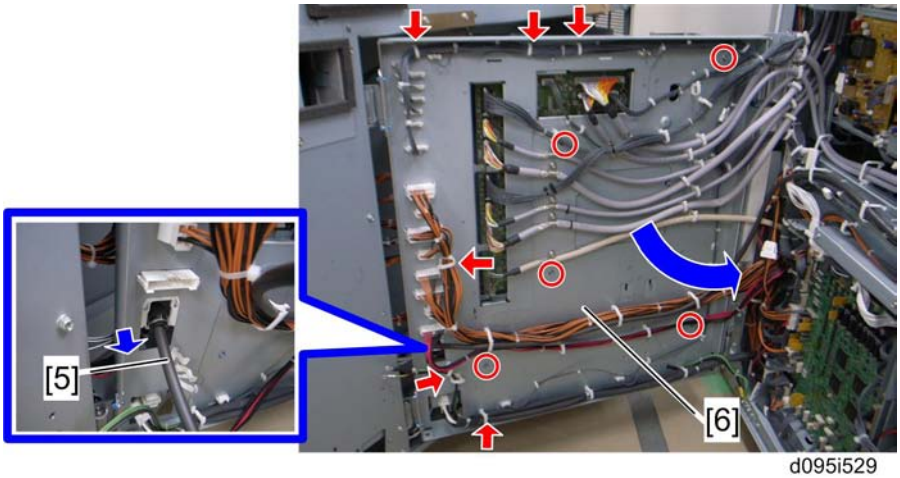

d095i529

8. Take out the air tube [5] from the cutout.
9. Unlock six clamps, and then disconnect all connectors.

Important

- **Do not unlock clamps other than the clamps indicated by arrow marks. Otherwise, incorrect connections may occur when attaching the rear controller box.**

10. Open the harness bracket [6] (x 5).

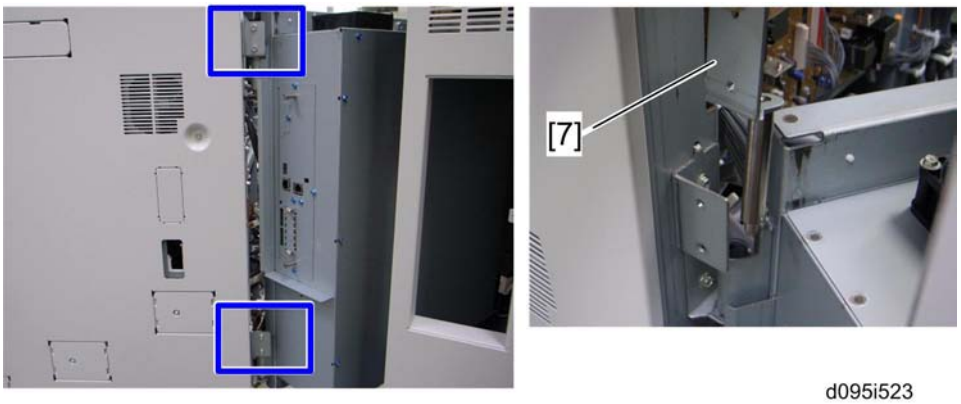

d095i523

11. Remove the pivot brackets (upper and lower) [7] (x 2 each).

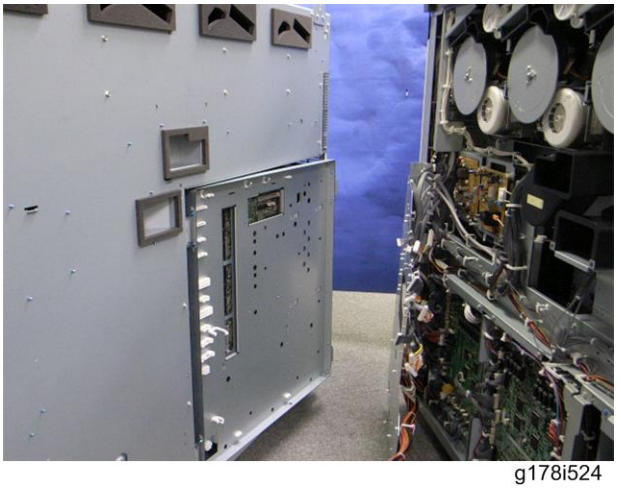

g178i524

12. The picture above shows that the rear controller box is away from the mainframe.
13. When reassembling the machine, look for a tube that comes from the rear of the machine. Be very careful not to damage this tube. This comes from the fusing unit, and connects to the optional air separator unit.

A3/11"x17" Tray Unit TK5000 (B331)

Accessories

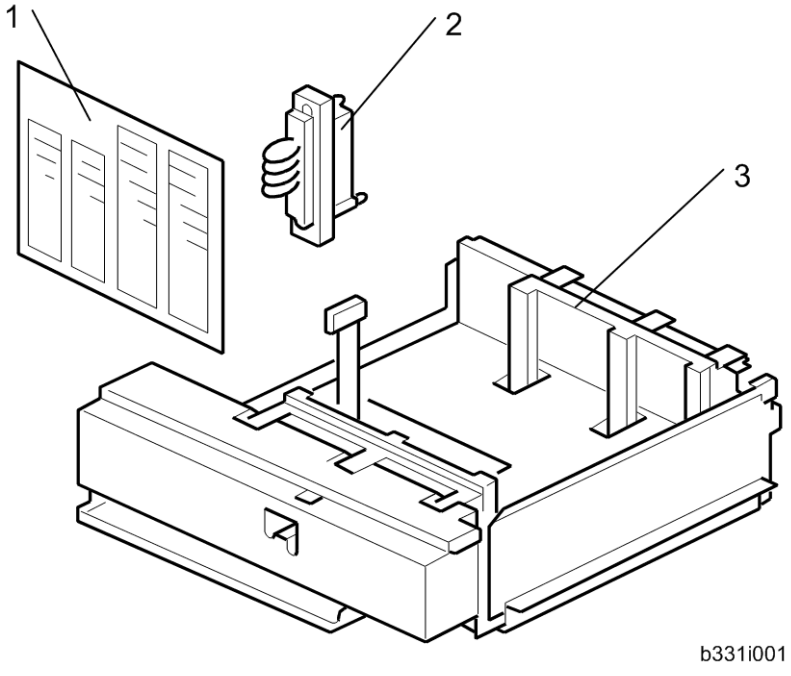

Check the quantity and condition of the accessories in the box against the following list:

Description	Q'ty
1. Paper Size Decal	1
2. Short Connector	1
3. A3/DLT Tray	1

Installation

⚠CAUTION

- Switch the machine off and unplug it from the power source before starting the following procedure. (☛page 58 "Correct Procedure to Turn Off the Power ")

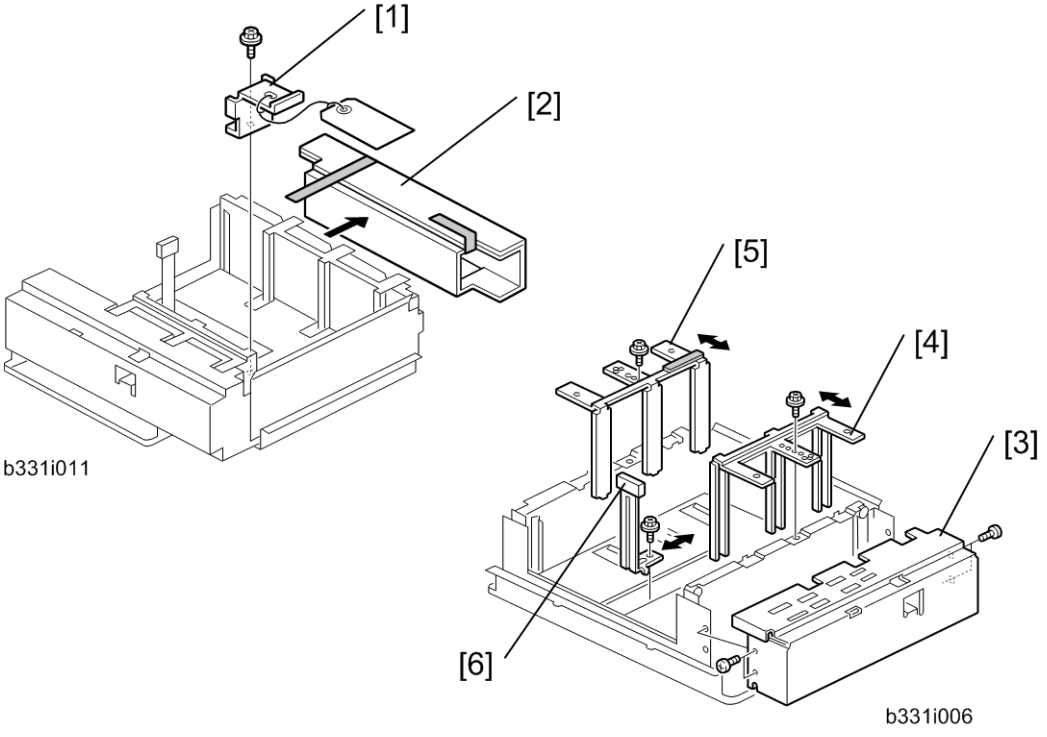

1. Remove the shipping material [1] and metal retainer [2] (x 1).
2. Check the position of the front and back side fences and make sure that they are set for DLT or A3.
3. If you need to adjust the positions of the side fences for the paper to be loaded in the tray, remove the front panel [3] (x 4).
4. Remove the fences and adjust their positions for the paper to be loaded: front fence [4] (x 1), back fence [5] (x 1), and end fence [6] (x 1)

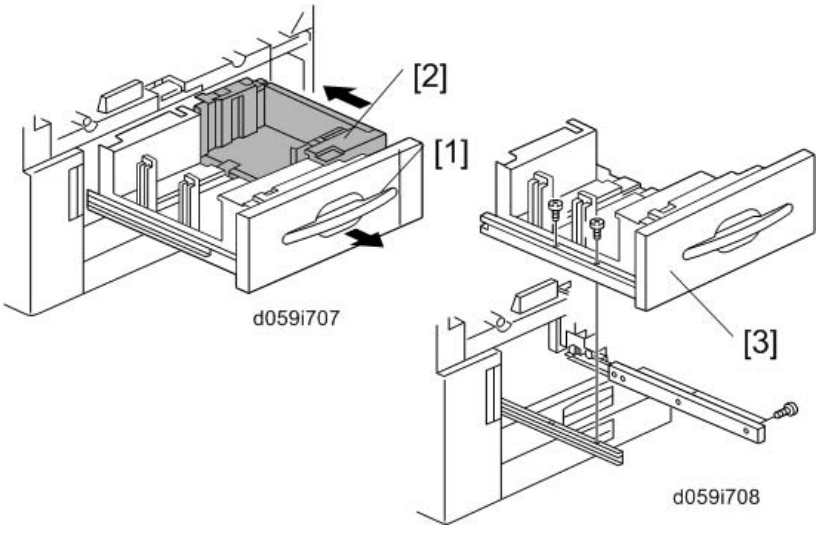

5. Open the front doors.
6. Pull out the tandem feed tray [1] completely.
7. Push the right tandem tray [2] into the machine.
8. Remove the left tandem tray [3] (x 2 left, x 3 right).

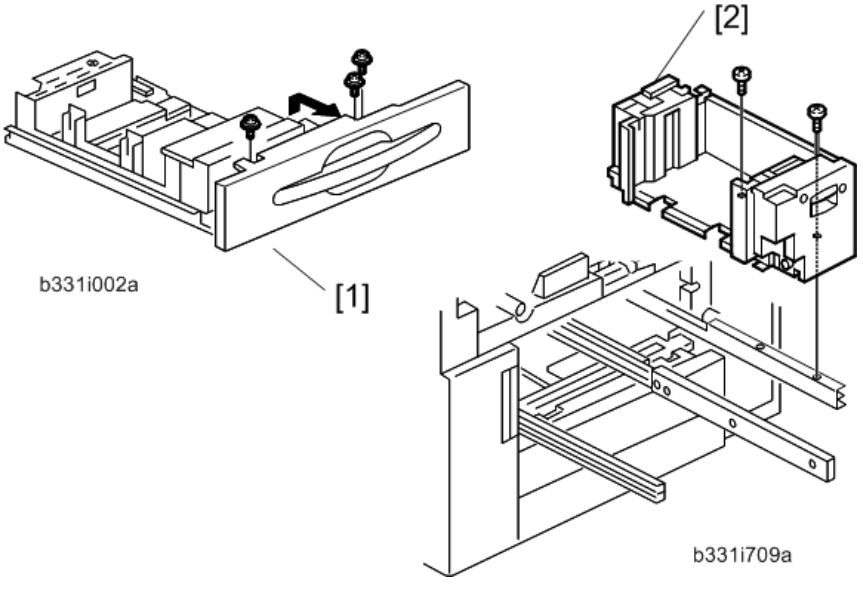

9. From the left tandem tray, remove the front cover [1] (x 2).
10. Pull out the right tandem tray [2], then remove it (x 2).

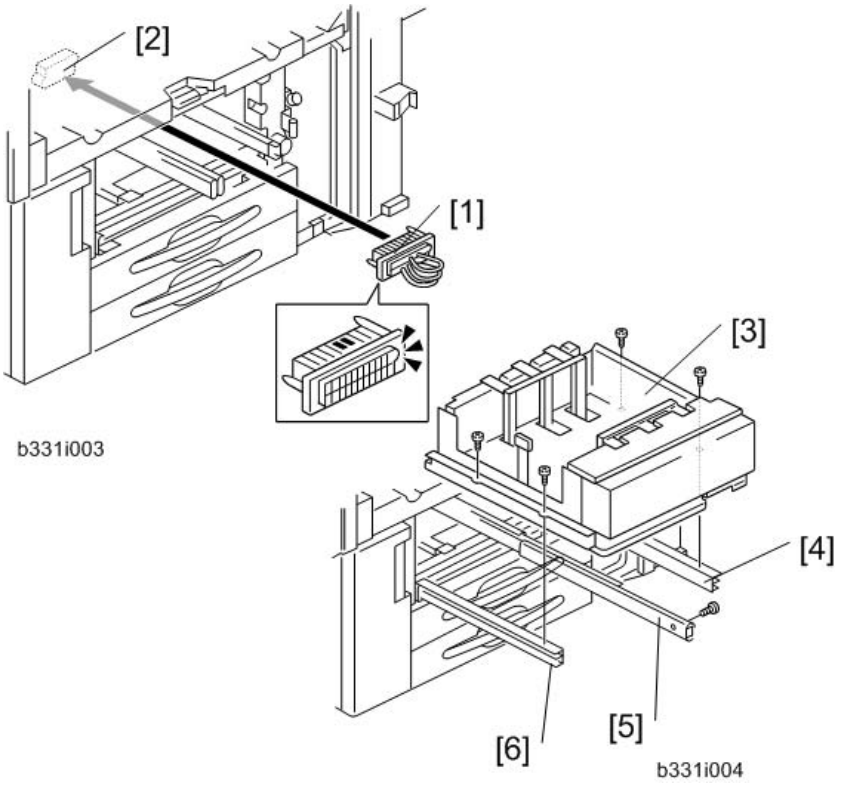

11. Insert the short connector [1] into the socket inside the machine [2].

Note

- Hold the connector as shown in the illustration.

12. Using the screws removed in Steps 8 to 10, install the tray [3] on the right rail [4], center rail [5], left rail [6].

Note

- You must use the short, silver screws on the left and right rails. If you use one of the longer screws, it will block the movement of the tray on the rails.

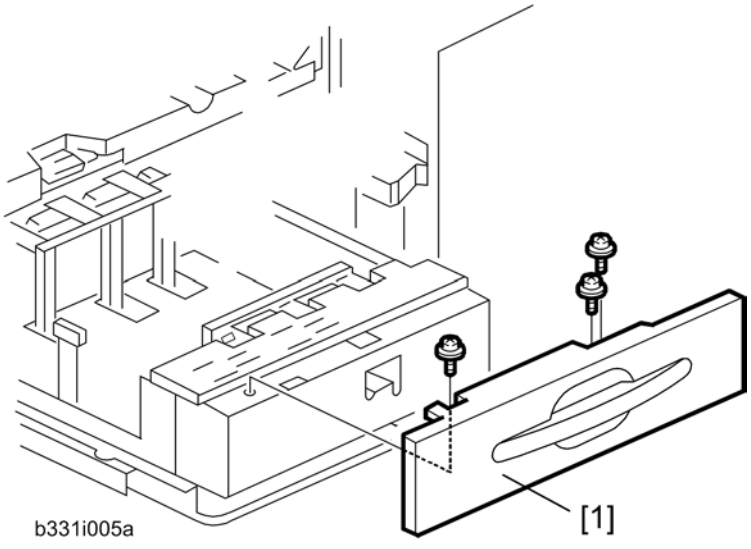

13. Re-install the front cover [1] (🔩 x 3).
14. Select the paper size setting for Tray 1 (A3 or DLT) with SP5-019-002 (Paper Size Tray1).
15. After selecting the paper size, switch the machine off and on to change the indicator on the operation panel.

Ring Binder (D392) Installation

Accessories

Check each accessory against the list below to make sure that you have everything.

No.	Item	Q'ty
1.	Docking Bracket	1
2.	Entrance Guide Plate	1
3.	Entrance Guide Plate: Short	1
4.	Sponge Strip	1
5.	Power Cord	1
6.	Ring Opener	1
7.	Ring Supply Level Indicator	1
8.	Screws (M4 x 14)	4
9.	Tapping Screws (M3 x 6)	4
10.	Leveling Shoes	4
11.	Ground (Earth) Plate	1

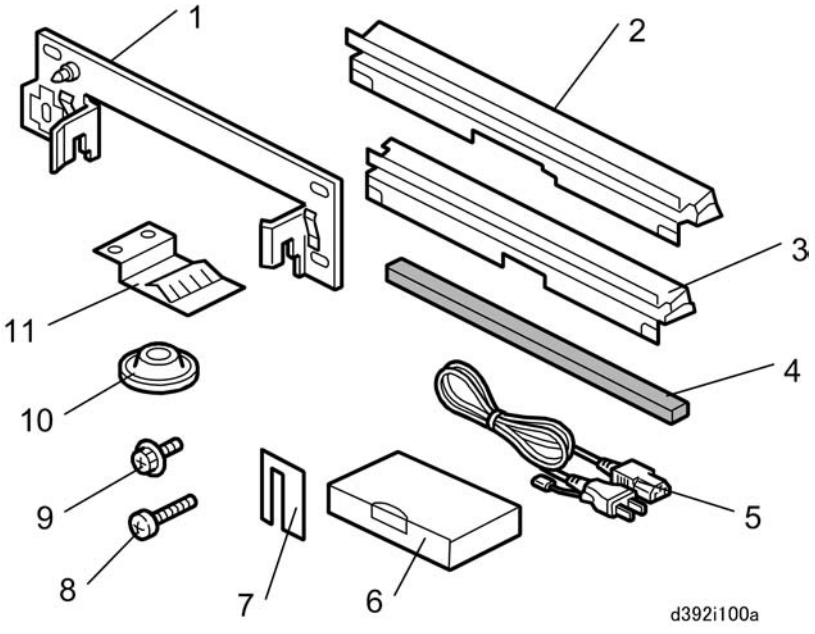

Before You Begin

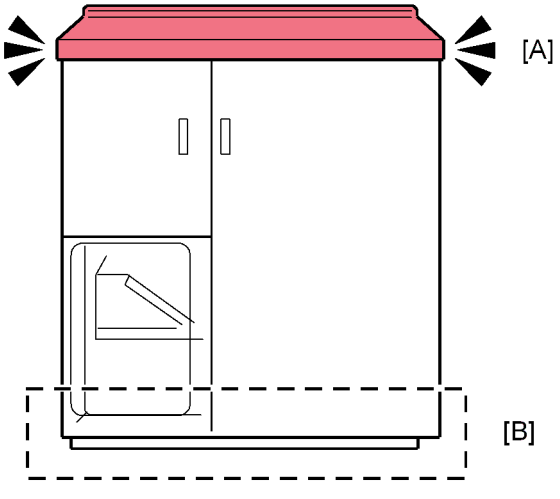

The finisher weighs 140 kg (308 lb.).

IMPORTANT: To prevent bending or breaking the top cover, never lift the finisher by its top cover [A]. Always raise the finisher from the base [B].

Installation Procedure

⚠CAUTION

- Switch the machine off and unplug it from the power source before starting the following procedure. (page 58 "Correct Procedure to Turn Off the Power ")

Remove All Shipping Materials

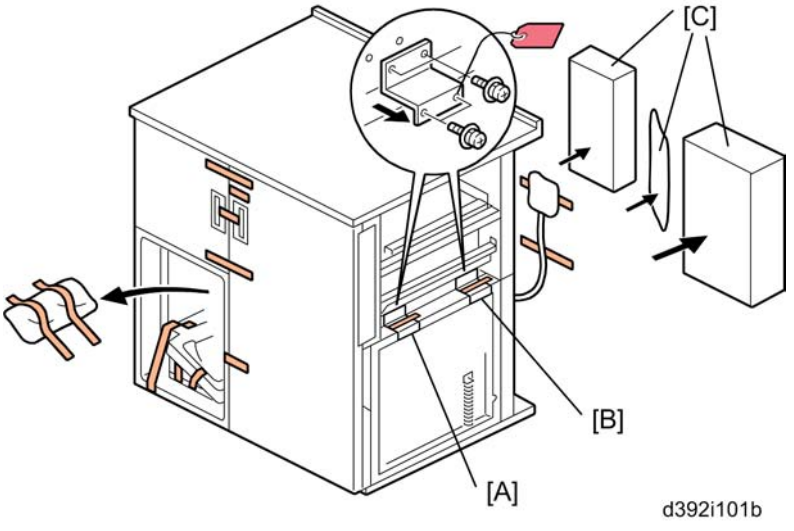

1. Remove all visible tapes, wrapping material, and cushions attached to the outside of the finisher and the power cord.
2. Remove:

   [A] Brace x1 (x4)

   [B] Brace x2 (x4)

   [C] Two boxes (ring opener and accessories) and power cord

   IMPORTANT: Do not discard these braces. They must be reattached to the finisher before it is moved or shipped to another location.

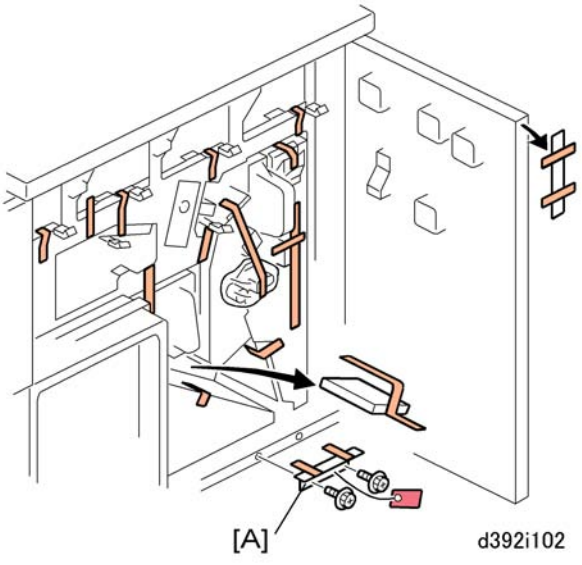

3. Open the right door and left door.
4. Remove all tapes and packing material.
5. Remove the brace and red tag [A] (x2).

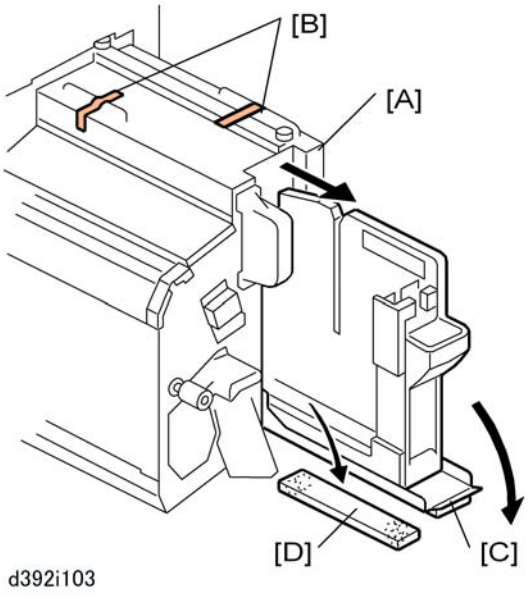

6. Pull the binder unit [A] out of the finisher until it stops.
7. Remove the tape [B] on top of the finisher.
8. Pull down the ring cartridge handle and cover [C].
9. Pull the ring cartridge out and remove the cushion [D].

10. Push the ring cartridge in and close its cover.
11. Push the binder unit into the finisher.
12. Close the left front door and right front door.

Prepare the Finisher for Docking

For installing on the mainframe

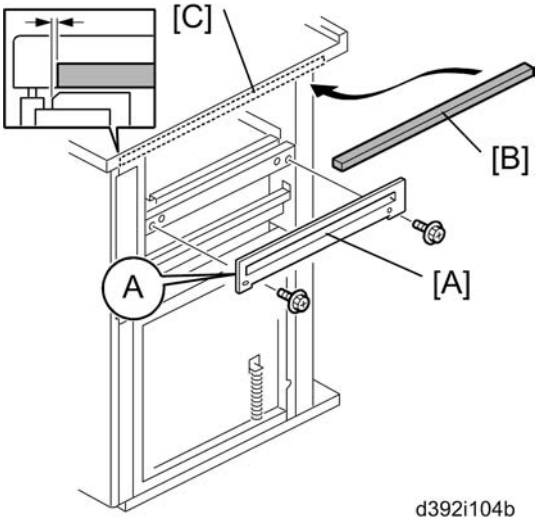

1. Attach the entrance guide plate (marked "A") [A] provided with the mainframe (x 2).
2. Remove the tape from the back of the sponge strip [B].
3. Attach the sponge strip to the top edge [C] of the finisher as shown above.

For installing on a peripheral

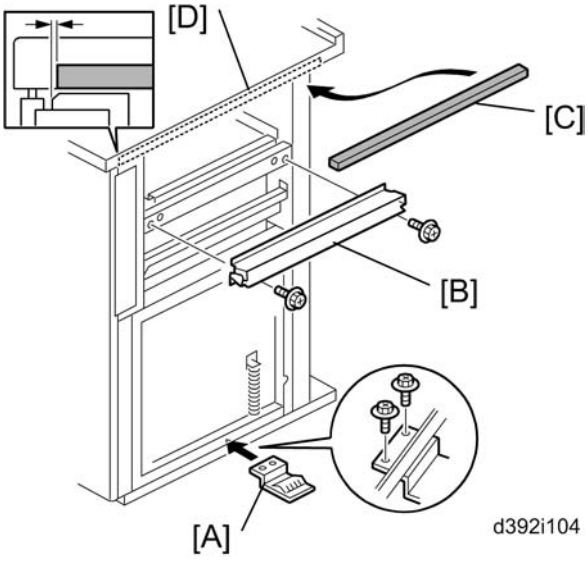

1. Attach the ground plate [A] to the right bottom of the ring binder (x 2).
2. Attach the entrance guide plate [B] (not the short one) in the accessories (x 2).
3. Remove the tape from the back of the sponge strip [C].
4. Attach the sponge strip to the top edge [D] of the finisher as shown above.

Prepare the Mainframe or other peripheral for Docking

For installing on the mainframe

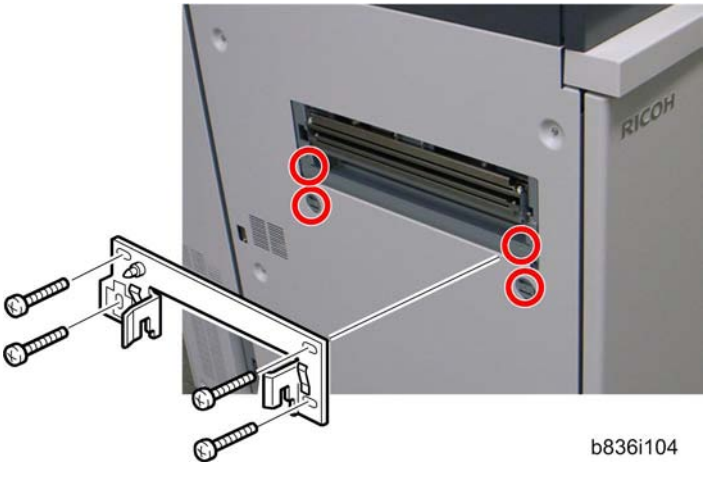

1. Attach the docking bracket to the mainframe (x 4: M4x8 provided with the mainframe).
2. Make sure that the ground plate provided with the mainframe is attached to the bottom left of the mainframe (x 2).

For installing on a peripheral

1. Attach the docking bracket to the peripheral (x 4).
    - Use **M4x14** screws in the accessories for the Buffer Pass Unit or Cover Interposer B835.
    - Use **M4x10** screws provided with the Z-Folding Unit B660 for the Z-Folding Unit B660.

Dock the Finisher to the Upstream Unit

Dock the Finisher to the Mainframe or Buffer Pass Unit (M379)

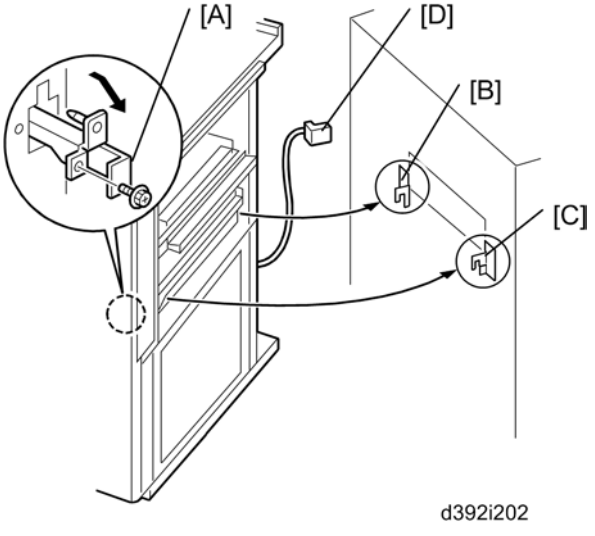

1. Open the right door of the finisher.
2. Pull out the locking lever [A] (x 1).
3. Align the right side of the finisher with the docking brackets [B] on the left side of the mainframe, and then slowly push the finisher onto the brackets.
4. Connect the finisher I/F cable [C] to the mainframe.
5. Push in the locking lever and check that it slides into the slots of the docking brackets.
6. Check that the top edge of the finisher is parallel with the left edge of the mainframe.
7. Refasten the locking lever [A] (x 1) and close the right front door.

Dock the Finisher to the Cover Interposer B835

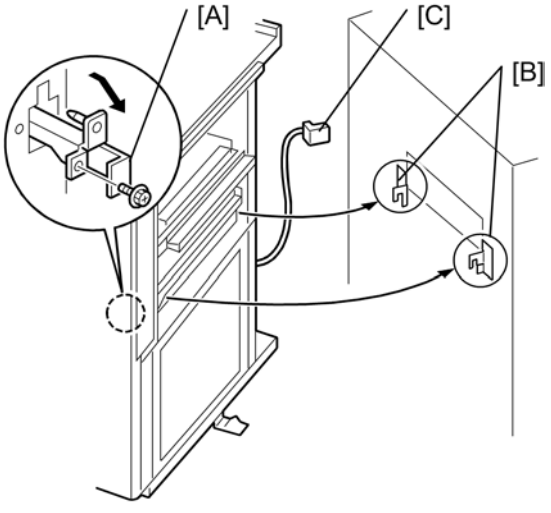

d392i106

1. Open the right door of the finisher.
2. Pull out the locking lever [A] (x 1).
3. Align the right side of the finisher with the docking brackets [B] on the left side of the upstream unit, and then slowly push the finisher onto the brackets.
4. Connect the finisher I/F cable [D] to the Cover Interposer B835.
5. Push in the locking lever and check that it slides into the slots of the docking brackets.
6. Check that the top edge of the finisher is parallel with the left edge of the upstream unit.
7. Refasten the locking lever [A] (x 1) and close the right front door.

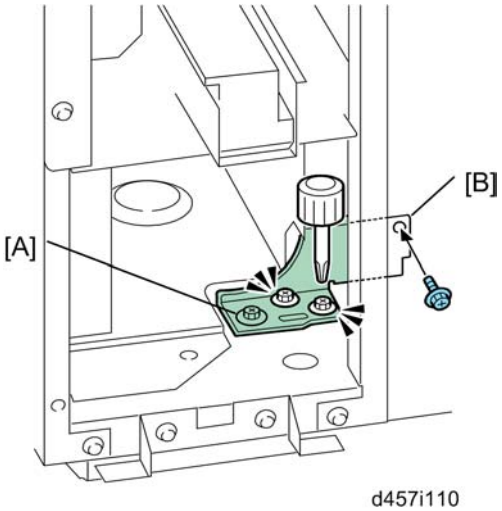

d457i110

8. Remove the rear cover of the Ring Binder (x8).
9. Remove the rear covers of the upstream unit.

10. Use a stubby screwdriver to loosen bracket [A] (x3).
11. Fasten the bracket to the upstream unit at [B] (x1).
12. Tighten the screws (x3).
13. Re-attach the rear covers.

Dock the Finisher to the Z-Folding Unit B660

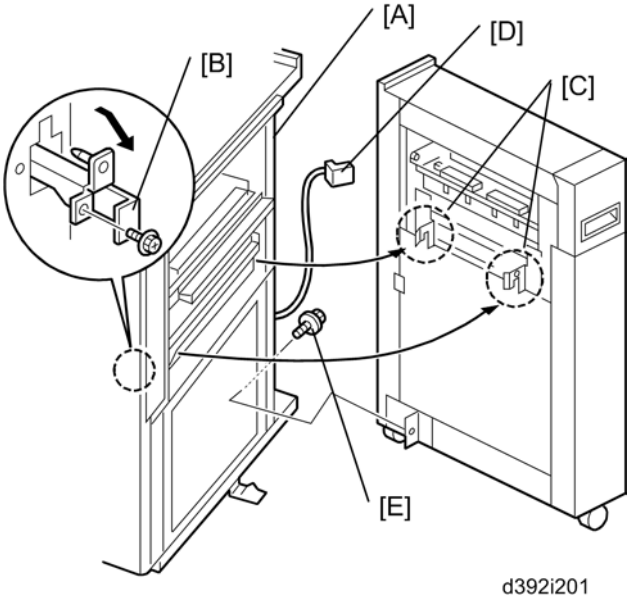

1. Remove the rear cover [A] of the finisher (x8).
2. Open the right door of the finisher.
3. Pull out the locking lever [B] (x 1).
4. Align the finisher with the joint brackets [C], then slowly push the finisher onto the brackets.
5. Connect the finisher cable [D] to the Z-Folding Unit.
6. Push in the locking lever [B].
7. Check that the top edges of the finisher are parallel with edges of the Z-Folding Unit.
8. Fasten the locking lever [B] (x 1).
9. Fasten the screw [E] (x 1).
10. Reattach the rear covers of the finisher and Z-Holding Unit.
11. Close the right door of the finisher.

Install the Shoes and Level the Finisher

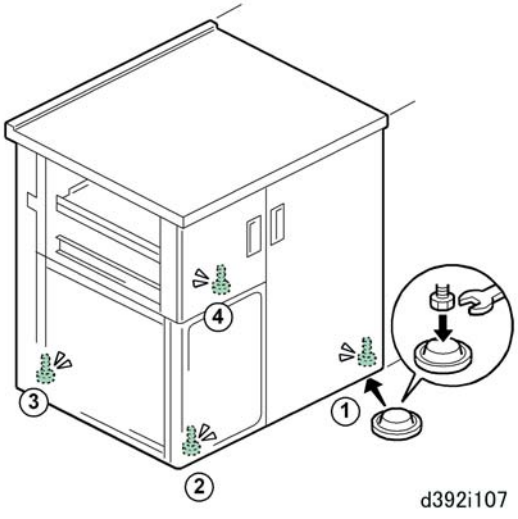

1. Set the leveling shoes (x4) under the feet of the finisher.
2. Open the right front door and left front door.
3. Place a level on the frame
4. Use a wrench to turn the nut at each foot until the machine is level.

Peripheral Height Adjustment

Important

- **If this unit is to be installed to the left of the mainframe (D095 or M077), the following adjustment procedure is required. If not, go to the next section "Attach Ring Supply Level Indicator".**

1. Turn on the main power switch.
2. Enter the SP mode, and then execute SP5-805-016.

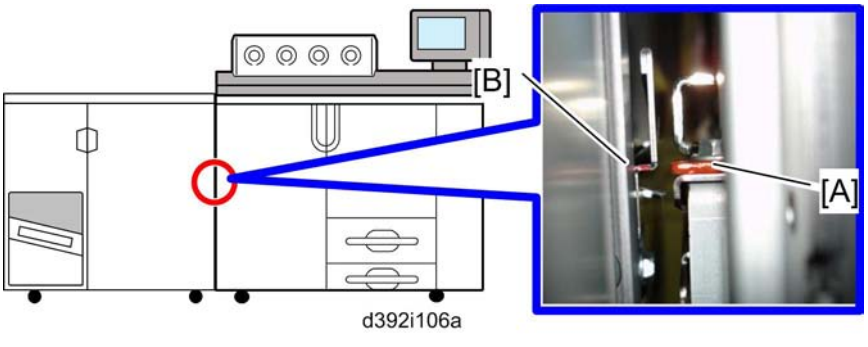

1. Check the paper exit guide plate [A] of the mainframe and relay guide plate [B] of the peripheral from the front side.

2. Remove the rear cover of the peripheral, and then check the paper exit guide plate of the mainframe and relay guide plate of the peripheral from the rear side.

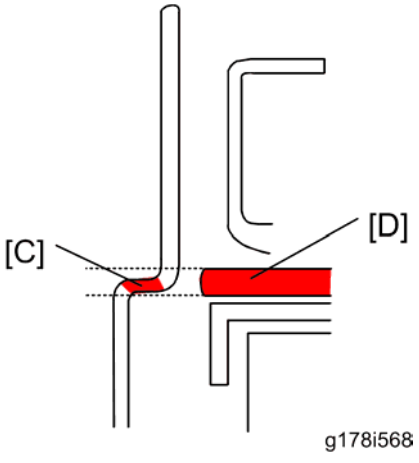

3. If the red areas [C] on the front and rear side edges of the peripheral's relay guide plate are level with the plate edge [D] on the decurler unit, no adjustment is required. Otherwise, go to the next step.

Note

- The upper edge of the red area must not be above the top edge of plate edge [D], and the lower edge of the red area must not be below the bottom edge of plate edge [D])

4. Adjust the feet of the mainframe or peripheral so that the red areas at the front and rear [C] are level with the plate edge [D], as explained above.

Attach Ring Supply Level Indicator

1. Open the front door.
2. Pull out the ring binder.
3. Lift the ring supply cartridge out of the top of the binder unit.

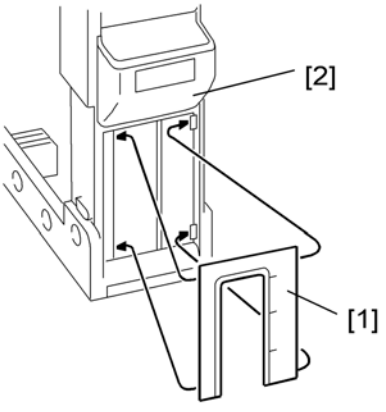

d392i110

4. Set the ring supply level indicator [1] behind the tabs on the side of the ring supply cartridge [2].

Test the Breaker Switch

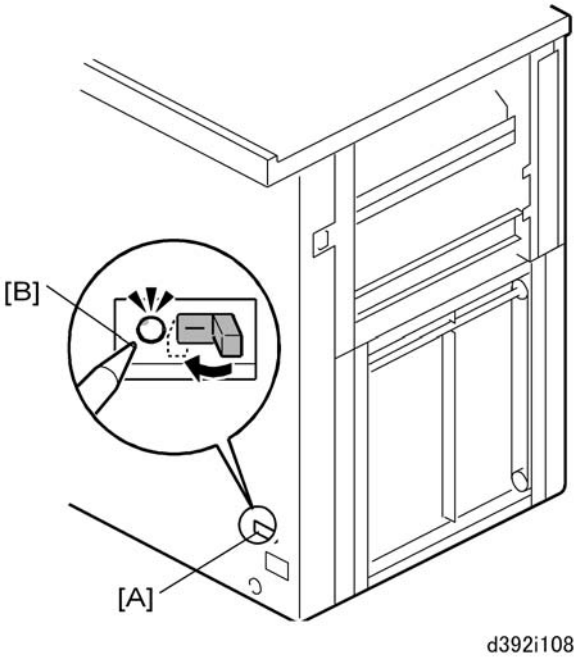

d392i108

1. If the mainframe is on, turn it off.
2. Confirm that the breaker switch [A] is set to the right.

Note

- The breaker switch is at the bottom of the left rear corner near the power cord. When it is set to the right, you should see a straight line (-).

3. Connect the power cord to the finisher, then connect the other end to a power supply outlet.
4. Use the sharp point of a pen [B] or similar tool to push in the breaker switch until it snaps to the off position. (You should see "0".)
5. If the breaker does not snap to the off position:
   - Check that the power cord is correctly connected to the finisher and power supply.
   - Push the breaker switch again to see if it snaps to the off position.
   - If the breaker switch does not snap to the off position, it must be replaced.
6. Be sure to reset the breaker switch to the on (-) position.

Centering Paper in the Paper Path

At installation you must confirm that the paper is exiting the ring binder correctly and do the necessary correction if required. There are two checks:

- Side-to-side registration check. The paper should be centered in the paper path.
- Skew check. The paper should feed straight out of the ring binder.

Checking and Correcting Side-to-Side Registration

Checking Side-to-Side Registration

Do this check to confirm that the paper is centered in the paper path.

1. Make sure that the I/F cable of the ring binder unit is connected.
2. If the finisher is connected to the left side of the ring binder, disconnect it and pull it away from the left side of the ring binder.
3. Execute a run by feeding paper (A4 or LT) from Tray 2 of the host machine (punching only, no ring binding).

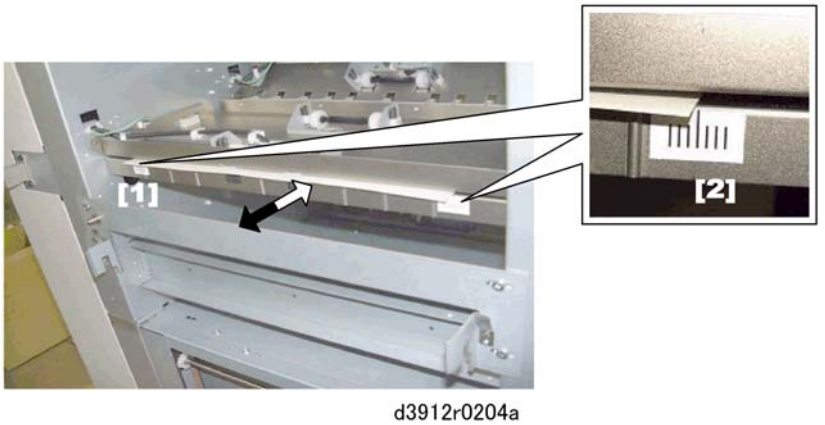

d3912r0204a

4. During the run, each sheet of paper briefly protrudes about 5 to 10 mm before it switches back into the ring binder and feeds to the punch unit, as shown above.
   - There are two scales on the left side of the ring binder below the paper exit.
   - The rear scale [1] is for LT-size paper and the front scale [2] is for A4-size paper. Be sure to read the correct scale for the paper size in use.
5. Check the position of the paper on the scale to determine if the paper is centered.

   Important

   - **Read the rear scale for LT-size paper and the front scale for A4-size paper.**
   - **The scale lines are spaced 1 mm apart.**
   - **The edges of the paper should be at the center line and not deviate more than ±2 mm.**

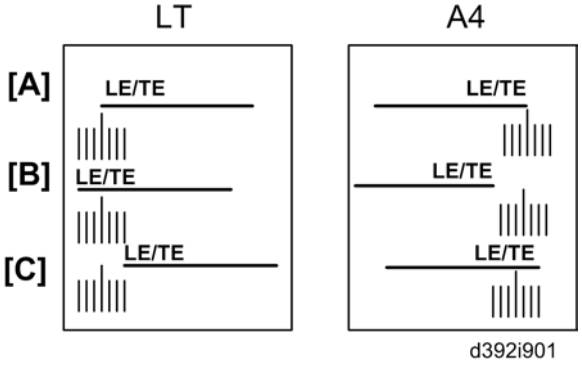

[A]	Leading/trailing edges centered. No adjustment necessary.
[B]	Leading/trailing edges offset to the rear more than 2 mm. Adjustment required.
[C]	Leading/trailing edges offset to the front more than 2 mm. Adjustment required.

6. If the edge of the paper is on the scale at the center [A], no adjustment is required.

   -or-

   If the edge of the paper is ±2 mm off the center line on the scale, adjustment is required. Do the procedure in the next section.

Correcting Side-to-Side Registration: Bracket Adjustment

Important

- **If the Z-fold unit is the next unit on the right, you must first do the procedure below and then do the procedure for the Z-fold unit described in the next section.**

1. Disconnect the ring binder from the upstream unit.

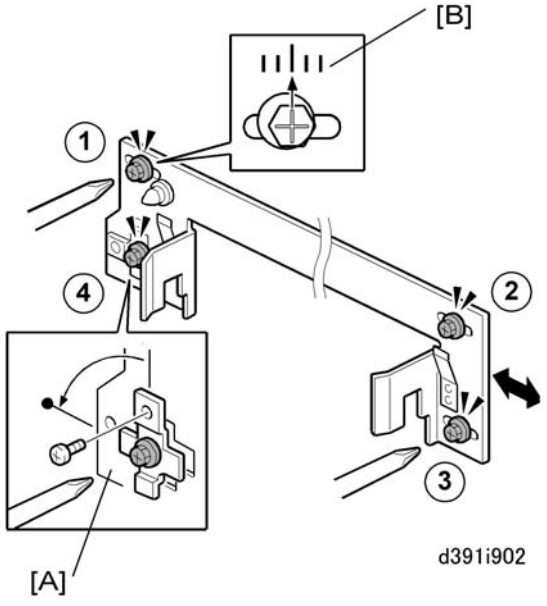

2. On the docking bracket attached to the upstream unit, loosen screws (1), (2), (3), and (4).
3. Remove bracket [A] (x 1), rotate it 90 degrees, and re-fasten the screw. Changing the position of this bracket aligns the oval cut-out horizontally and frees the joint bracket so it can slide side-to-side.
4. Look at the scale [B].
5. Slide the bracket to the left or right and tighten the screw.

   If the deviation from center was toward the front, slide the bracket to the rear and tighten the screw (1).

   -or-

   If the deviation from center was toward the rear, side the bracket to the front and tighten screw (1).
6. Tighten screws (2), (3), and (4).
7. Do another test run to check the results of the adjustment.

   -or-

   If the unit on the right is the Z-fold unit, do the procedure described in the next section before doing more test runs.

Correcting Side-to-Side Registration: At Z-Fold Unit

After adjusting the docking bracket (described in the previous section), you must do this procedure if the next unit on the right is the Z-fold unit.

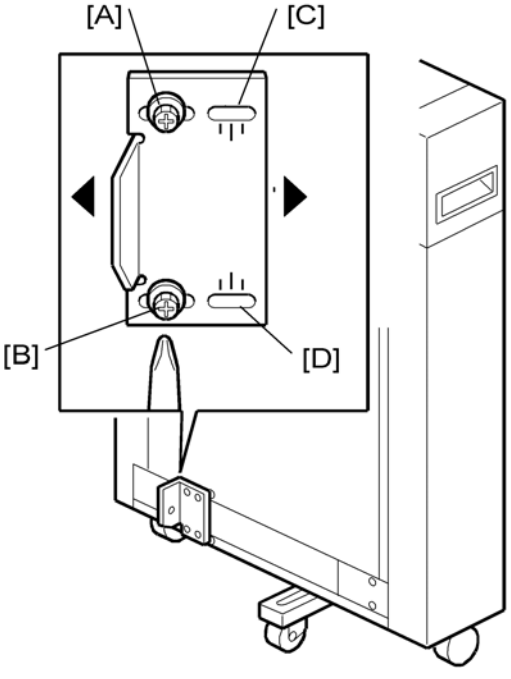

d392i903

1. At the base of the Z-fold unit, loosen screws [A] and [B].
2. Slide the plate left or right on the scales [C] and [D], to adjust the position by the same amount as the adjustment on the docking bracket in the previous section.
3. Re-tighten all the screws.
4. Do another test run and check the results of the adjustments.

Checking and Correcting Skew

Checking for Paper Skew

Do this check to confirm that the paper is not skewed in the paper path.

1. Make sure that the I/F cable of the ring binder unit is connected.
2. If the finisher is connected to the left side of the ring binder, disconnect it and pull it away from the left side of the ring binder.
3. Execute a straight-through run (no ring binding, no punching) with A3 or DLT from Tray 2 of the host machine.

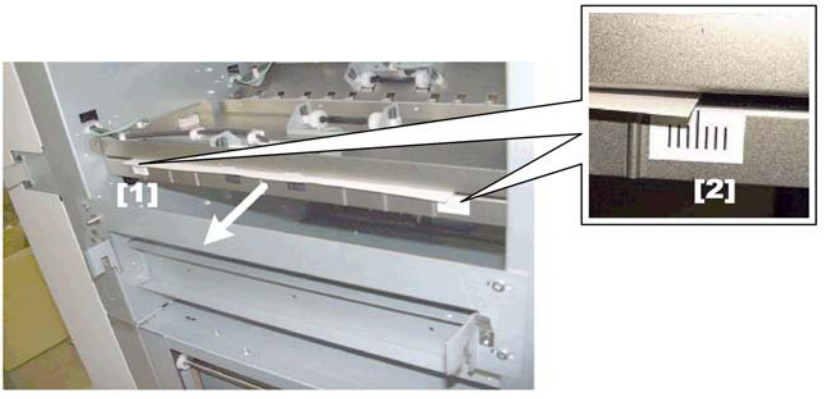

d3912r0204b

4. During the run, each sheet of paper exits the side of the ring binder, as shown above.
   - There are two scales on the left side of the ring binder below the paper exit.
   - The rear scale [1] is for DLT-size paper and the front scale [2] is for A3-size paper. Be sure to read the correct scale for the paper size in use.
5. Check the position of the paper on the scale to determine if the paper skews as it exits.

   Important

   - **Read the rear scale for DLT-size paper and front scale for A3-size paper.**
   - **The scale lines are spaced 1 mm apart.**
   - **The paper must not deviate more than ±2 mm on the scale.**

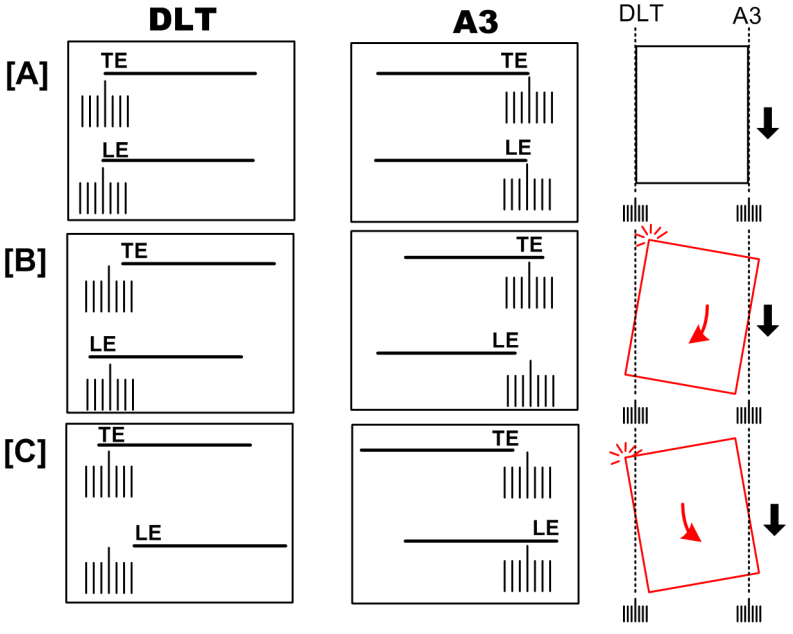

d392i904

[A]	Centered. No adjustment necessary.
[B]	Trailing edge skew to the front, total skew more than ±2 mm. Adjustment required.
[C]	Trailing edge skew to the rear, total skew more than ±2 mm. Adjustment required.

Correcting Skew

1. Disconnect the ring binder from the upstream unit.

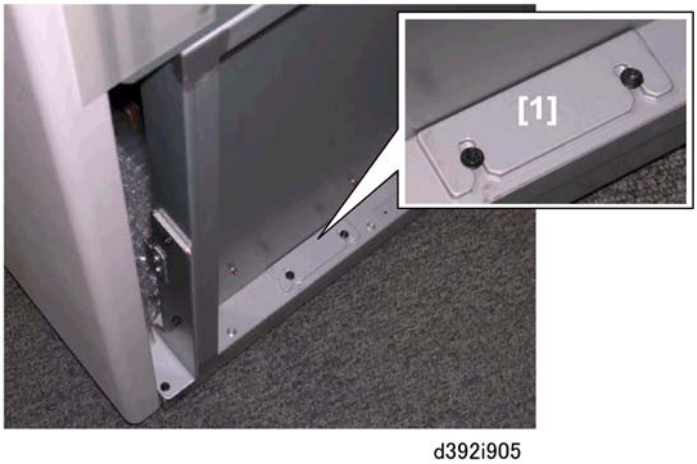

d392i905

2. Remove the spacers from the right side of the ring binder at the base (x2).

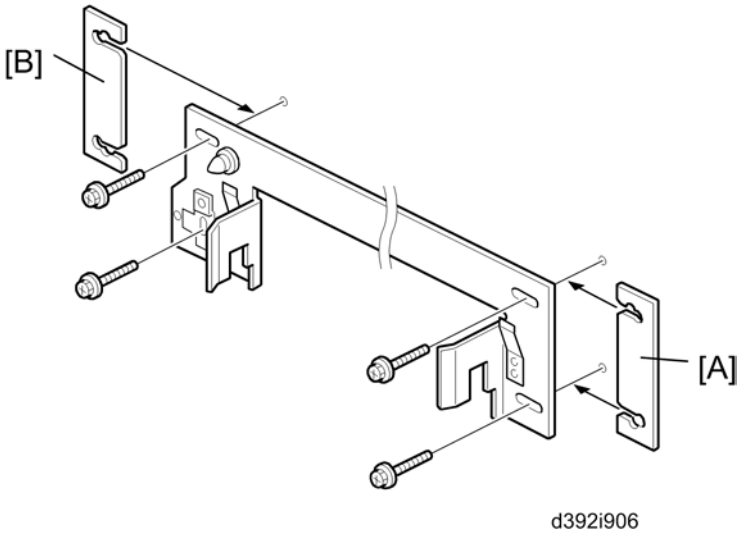

3. On the docking bracket attached to the upstream unit, loosen the screws.
4. Insert a spacer and tighten the screws.

   If the trailing edge is skewing toward the **front** of the machine, insert a spacer [A] under the **rear** end of the bracket and tighten the screws.

   -or-

   If the trailing edge is skewing toward the **rear** of the machine, insert a spacer [B] under the **front** end of the bracket and tighten the screws.
5. To another run to check the adjustment. If skew is still present, insert another spacer.

After Installation

Confirm that the operators understand the following important points:

- Decals attached to the machine that provide guidance for removing paper jams. Point out the decal locations.
- Detailed instructions on removing ring jams are provided in the operating instructions under "Removing Jammed Ring Combs".
- When pulling out and pushing in the binder unit on its rails, always grip the binder unit by its handle (**Mc8**).

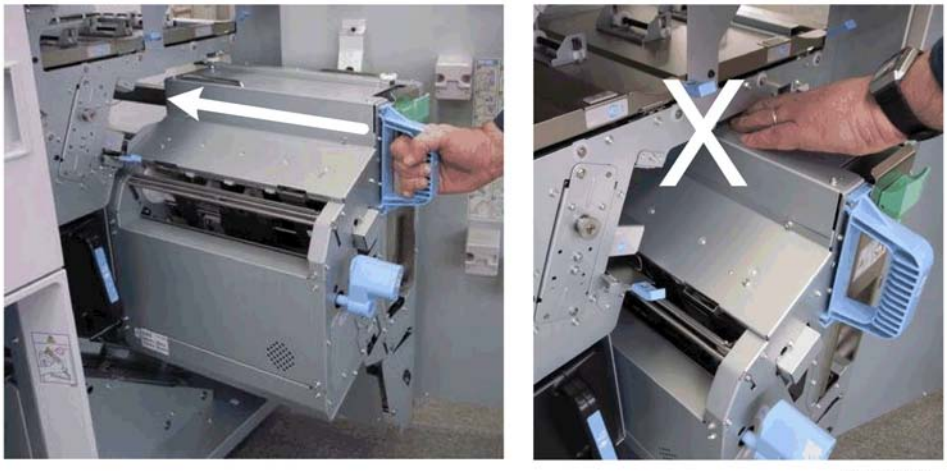

d392r902

⚠ CAUTION

- Always grip handle Mc8 when pulling out or pushing in the binder unit.
- Never touch any other surface of the binder unit when it is moving on its rails.
- To avoid injury the fingers, never push on the top of the binder unit to slide it back into the finisher as shown above.

- Never store paper, extra rings, manuals or any other material below the output tray. Obstacles in this area (circled in the illustration below) will interfere with the raising and lowering of the tray and cause an error.

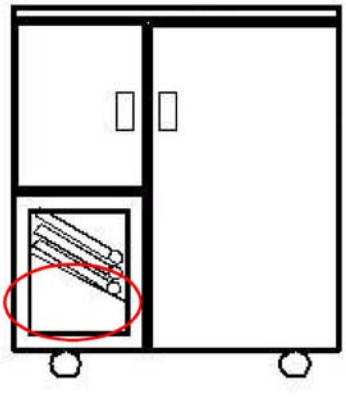

d392d910

Perfect Binder (D391) Installation

For details about installation of the following units before docking to the mainframe or other option, see the main service manual of the "Perfect Binder - Machine Code: D391".

- Perfect Binder GB5000 (D391) (hereafter the "bookbinder")
- Inserter-C1 (D391-18) (hereafter the "inserter")
- Transit Pass Unit Type GB5000 (D391-19) (hereafter the "relay unit")

Docking the Perfect Binder

Before Docking

Follow these steps below if the bookbinder is to be installed to the left side of the mainframe (D095 or M077). If not, go to "Docking Procedure".

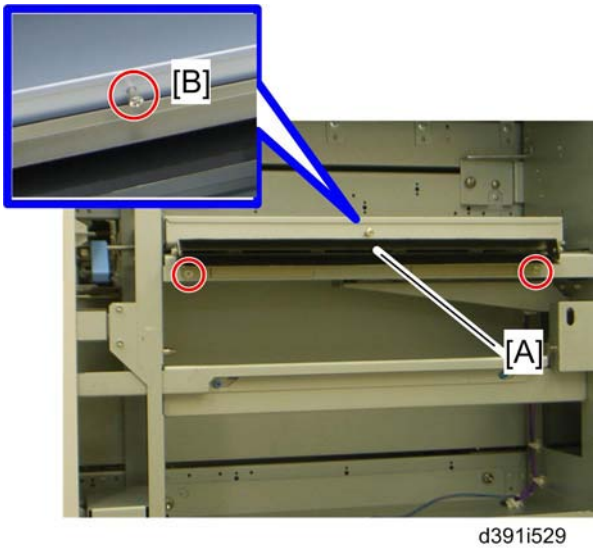

d391i529

1. Remove the entrance guide plate [A] and shoulder screw [B] of the relay unit.
2. Attach the relay guide plate (marked "A" provided with the D095 or M077 model) to the entrance of the relay unit.

Docking Procedure

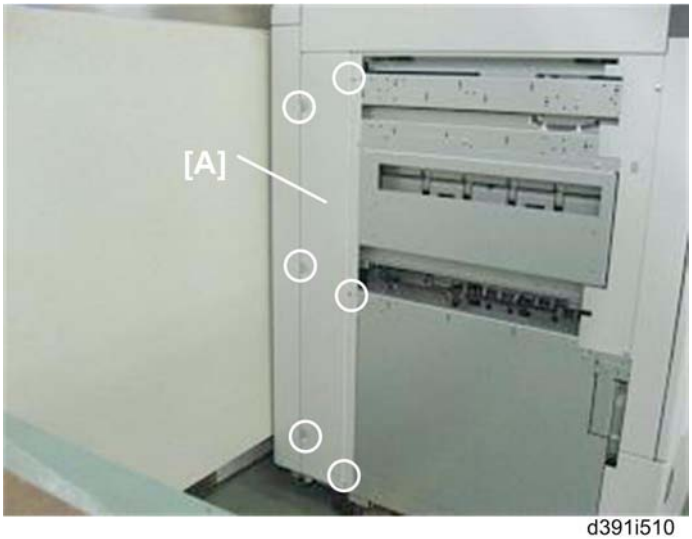

d391i510

1. At the left rear corner of the bookbinder, confirm that cover [A] has been reattached (x6).

d391i513

2. On the left side of the mainframe (D095 or M077) or a peripheral, attach:

   [A] Left joint bracket ("L") (x2)

   [B] Right joint bracket ("R") (x2)

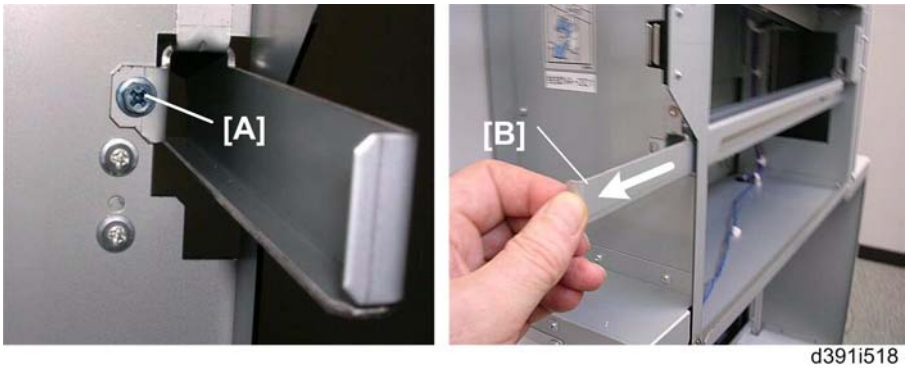

d391i518

3. Open the front door of the relay unit.
4. Remove screw [A].
5. Pull the lock bar [B] out to lower it.
6. Slowly push the bookbinder against the side of the mainframe or peripheral.

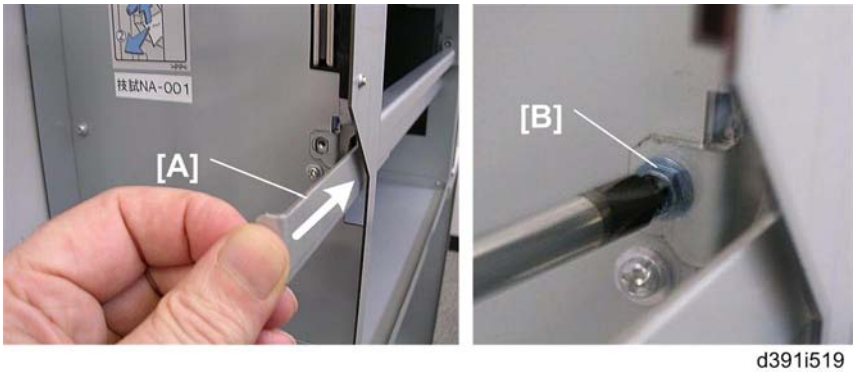

d391i519

7. Push in lock bar [A] to raise it and lock it in the cutouts of the joint brackets attached to the mainframe or peripheral.
8. Reattach screw [B] to fasten the lock bar in the raised position.

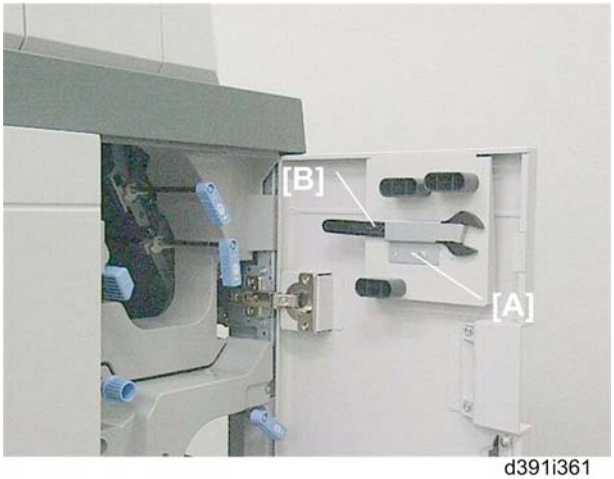

d391i361

9. Remove the brace [A] from the right front door of the bookbinder. (x1)
10. Remove wrench [B].

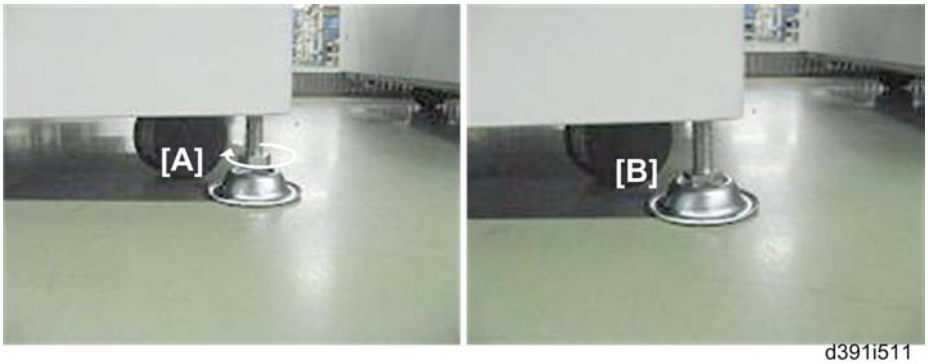

d391i511

11. Place a shoe [A] under the stoppers at each corner of the bookbinder.
12. Use your fingers (or the wrench) to turn the nut in the direction of the arrow until the nut stops on top of the shoe.

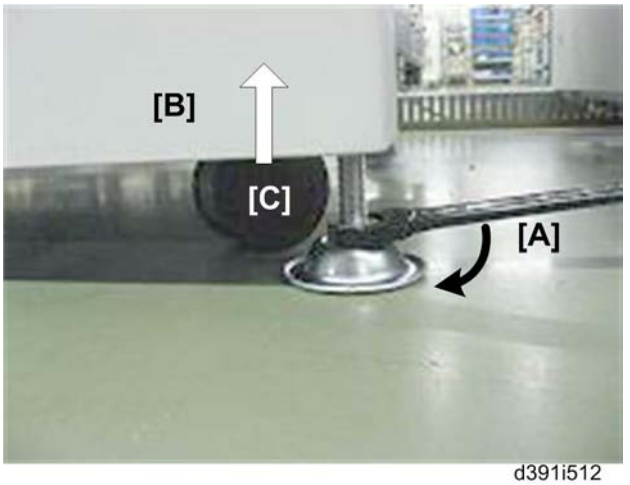

d391i512

13. At each corner use the wrench [A] to turn the nut in the direction of the arrow to raise the bookbinder [B] until the caster [C] raises off the floor.
14. Place a level on the top edge of the front and right edge of the machine to confirm that the bookbinder is level.
15. Adjust the corner stoppers until the machine is level.
16. Connect the bookbinder interface cable to the mainframe or peripheral.

Peripheral Height Adjustment

Follow these steps below if the bookbinder is to be installed to the left side of the mainframe (D095 or M077). If not, these steps are not required.

1. Turn on the main power switch.
1. Enter the SP mode, and then execute SP5-805-016.

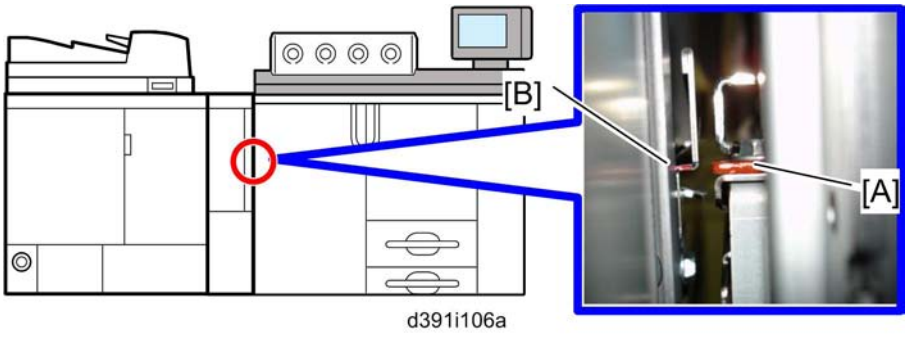

d391i106a

2. Check the paper exit guide plate [A] of the mainframe and relay guide plate [B] of the peripheral from the front side.
3. Remove the rear cover of the peripheral, and then check the paper exit guide plate of the mainframe and relay guide plate of the peripheral from the rear side.

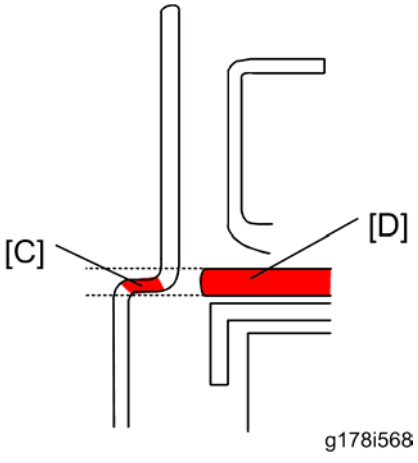

4. If the red areas [C] on the front and rear side edges of the peripheral's relay guide plate are level with the plate edge [D] on the decurler unit, no adjustment is required. Otherwise, go to the next step.

Note

- The upper edge of the red area must not be above the top edge of plate edge [D], and the lower edge of the red area must not be below the bottom edge of plate edge [D])

5. Adjust the feet of the mainframe or peripheral so that the red areas at the front and rear [C] are level with the plate edge [D], as explained above.

Filling Bookbinder Glue Supply Unit

1. Pull out the glue supply drawer until it stops.

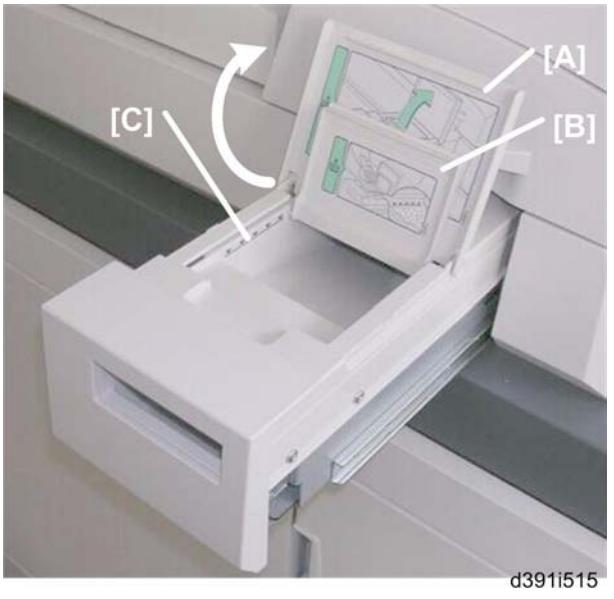

2. Raise the two covers [A] and [B].
3. Note the load limit marks [C] inside the drawer on both sides.

4. Use the scoop [A] to fill the bin with glue pellets as far as the load limit marks on both sides of the drawer.

Important

- Two scoops (about 380 g each) should be sufficient.

5. Close both covers.
6. Push in the glue supply drawer.

Handling and Storing the Glue Pellet Supply

Exercise precaution when choosing a location for storing the glue pellets.

- Store the pellets where they will not be exposed to direct sunlight.
- The storage location should be within this temperature range: -20°C to 40°C.
- Never expose pellets to direct flame.
- Keep the pellets out of the reach of small children. If pellets are accidentally ingested, contact a physician immediately.
- Never dispose of pellets by incinerating them. Obey local laws and regulations that restrict disposal of such items.

When using the glue pellets:

- Use only glue pellets recommended for use with this bookbinder.
- Before the start of a job, press the glue warm-up button on the right front corner of the bookbinder to start heating the glue.
- Never fill the glue pellet supply drawer higher than the load limit marks shown on both sides of the drawer.

Testing the Breaker Switch

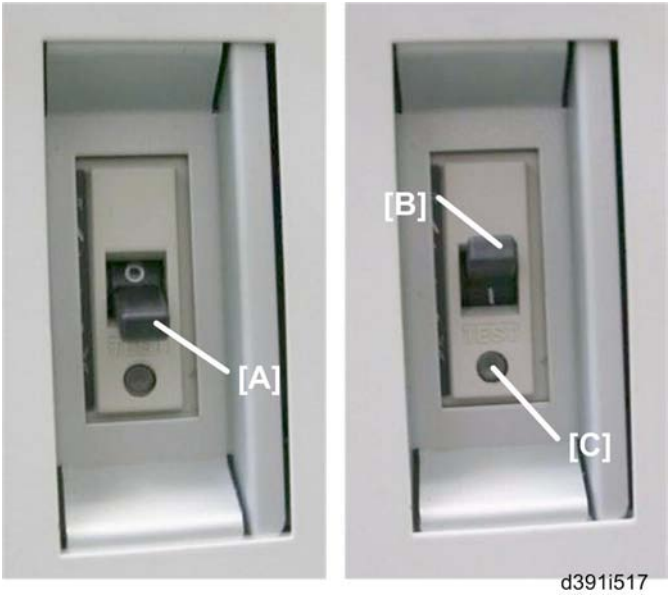

1. Turn off the mainframe.

   Important

   - **The power supply to the bookbinder must be off.**

2. Plug the bookbinder power cord into its power source.
3. Locate the breaker switch [A] at the right lower corner of the machine below the power cord.
4. Raise the breaker switch [B] so you can see the "|" under the switch. This is the ON position. (Ignore this step if the breaker switch is already at the "|" position.)
5. Use the tip of a small screwdriver to push the breaker test button [C].

   The breaker switch should flip to the "O" (OFF) position. This indicates that the breaker switch is operating normally.

   If the breaker switch does not flip to the "O" position, the switch must be replaced.
6. Reset the switch to the "|" (ON) position for normal operation.

   Important

   - **The bookbinder will not turn on if the breaker switch is not reset to the "|" position.**

High Capacity Stacker SK5010 (D447)

Accessories

Check the quantity and condition of the accessories in the box against the following illustrations and lists.

High Capacity Stacker (D447)

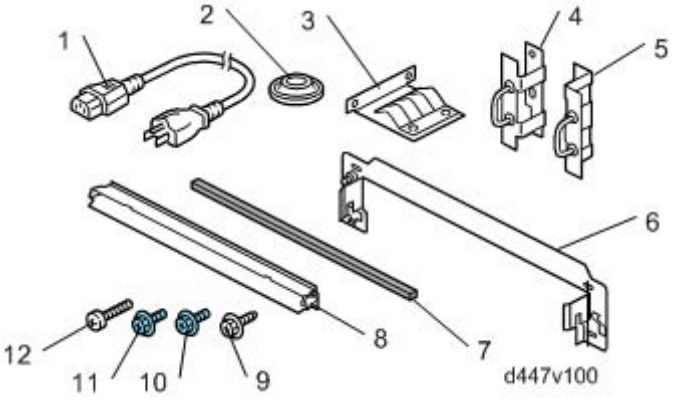

No.	Description	Q'ty
1.	Power Cord*1	1
2.	Leveling Shoes	4
3.	Ground Plate	1
4.	Lock Hasp – Left*2	1
5.	Lock Hasp – Right	1
6.	Joint Bracket	1
7.	Sponge Strip	1
8.	Paper Guide	1
9.	Screws M4x8	2
10.	Screws M3x6	4
11.	Screws M4x6	2
12.	Screws M4x14	4

*1: In case of using this unit in China, do not use this power cord in the accessories of the High Capacity Stacker (D447). Ask your supervisor and use a power cord specified for China's usage.

*2: A lock is not provided.

Roll-Away Cart Type 5010 (456-17)

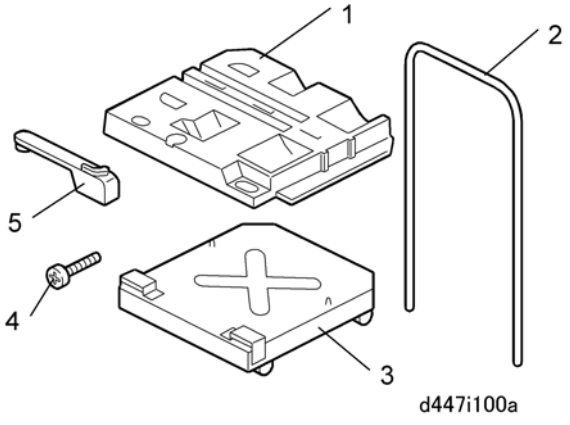

No.	Description	Q'ty
1.	Paper Tray	1
2.	Tray Cart Handle	1
3.	Tray Cart Base	1
4.	Screws M10x25	2
5.	Paper Press Lever	1

Important

- **If two high capacity stackers are to be installed in the same line, the second stacker must be installed on the left side of the first stacker.**

Installation

⚠CAUTION

- Make sure that the main machine is switched off and that its power cord is disconnected before doing the following procedure.

Shipping Tapes

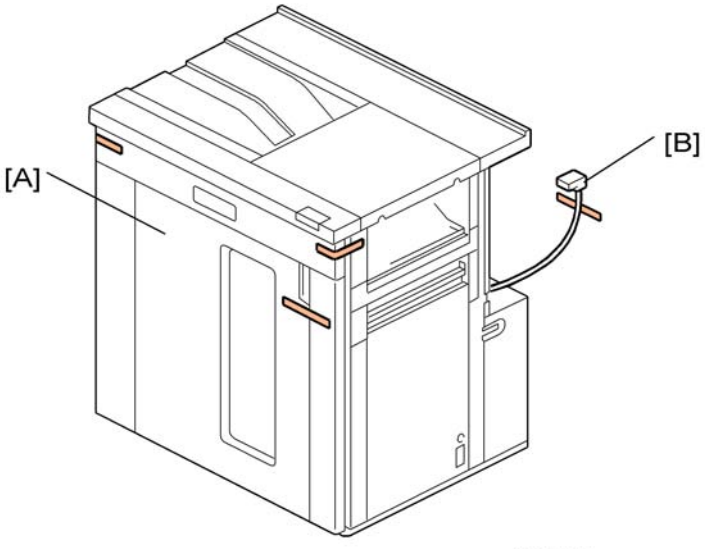

d447i101

1. Remove all visible tape from the front [A] and back [B].

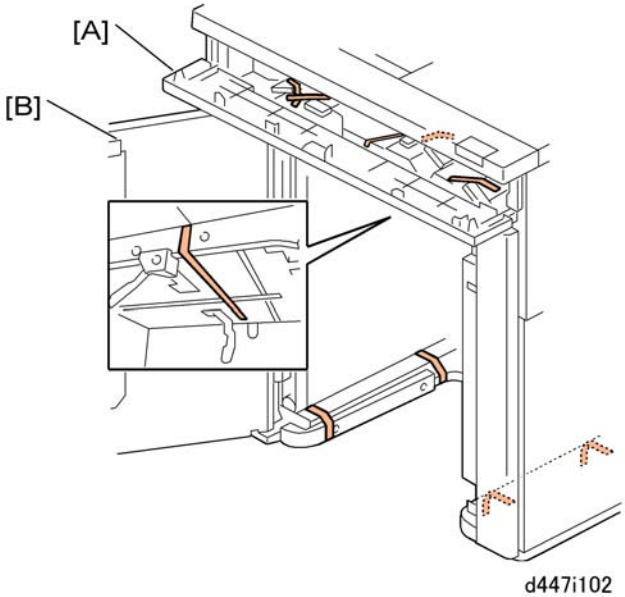

d447i102

2. Open the front panel [A] and remove all visible tapes.
3. Open the front door [B] and remove all visible tapes.

Paper Guide, Sponge Strip, Ground Plate

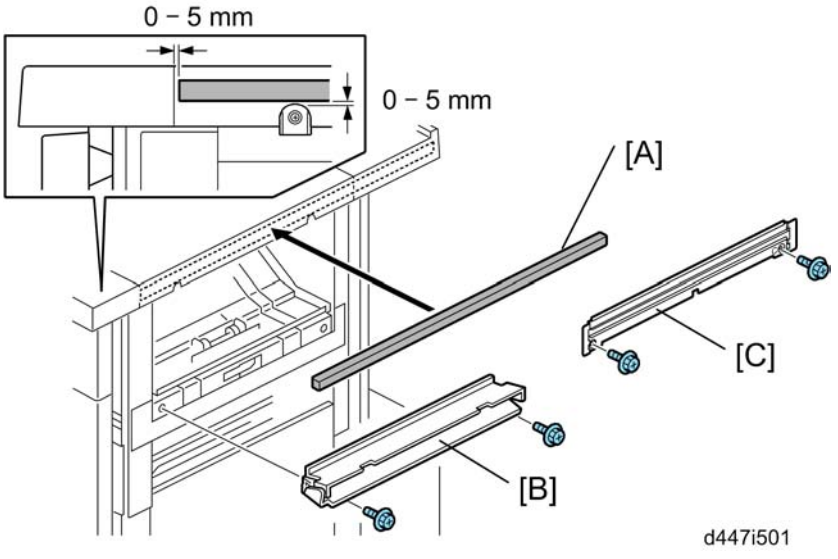

1. Remove the tape from the sponge strip [A] and attach the strip to the top right edge of the unit.

Note

- The sponge strip closes the gap between the D447 and the upstream unit to prevent paper or other objects from falling between the units.

2. Fasten the paper guide to the right side of the unit (x2).
   - For installing on upstream peripherals other than the mainframe (D095 or M077), use the paper guide [B] in the accessories of this unit.

Important

- **If the upstream peripheral device is the Cover Interposer Tray (B835) or the Decurl Unit DU5000 (D457), attach the black mylar provided with the cover interposer tray or decurl unit to this paper guide.**
- For installing on the mainframe (D095 or M077), use the paper guide [C] (marked "C") provided with the mainframe (D095 or M077).

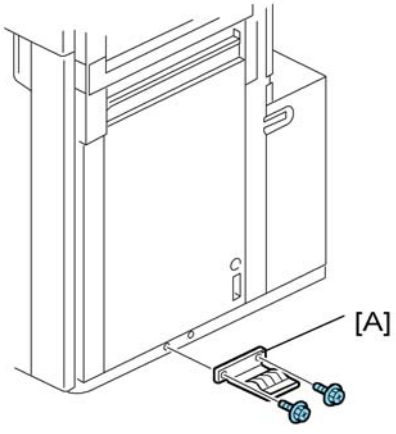

d447i106

3. Attach the ground plate [A] to the bottom right edge of the unit (x2 M3x6).
    - When attaching the stacker directly to the mainframe (D095 or M077), **do not attach** the ground plate [A]. Only use it when attaching the stacker to another peripheral.

Docking

Docking to the mainframe

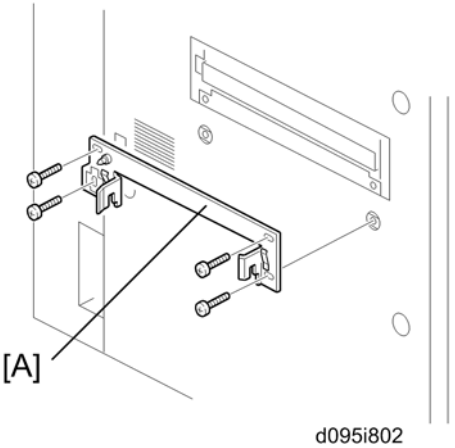

d095i802

1. Fasten the joint bracket [A] to the mainframe (D095 or M077) (x 4; M4x8 provided with the mainframe D095/M077).
2. Open the front door of this unit.

Docking to the peripheral

1. Fasten the joint bracket [A] to the upstream unit (x 4; M4x14).
2. Open the front door of this unit.

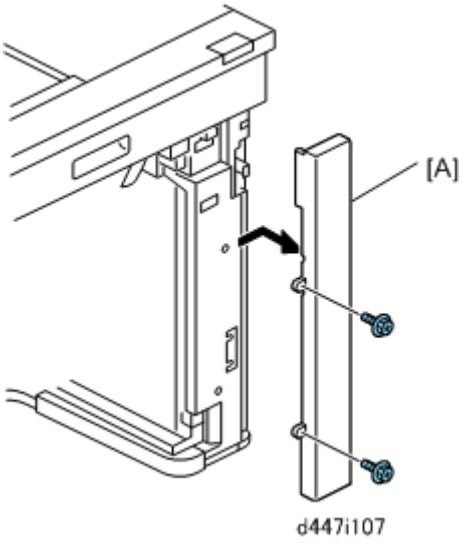

3. Remove the front right cover [A] (x2).

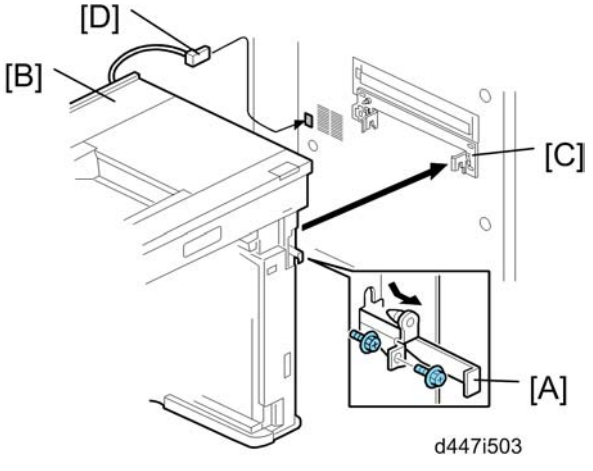

4. At the front right corner, remove the screw of the lock bar [A] (x1 M3x6). **Keep this screw.**
5. Pull the lock bar toward you until it stops.
6. Slowly push the unit [B] against the left side of the upstream unit (or main machine) so that the lock bar is directly and squarely under the arms of the joint bracket [C].
7. Push the lock bar in completely so that it slides up into the notches in the arms on both ends of the joint bracket.
8. Fasten the lock bar by re-attaching the screw removed in **Step 4** (x1).
9. Attach the I/F cable [D] to the upstream unit.

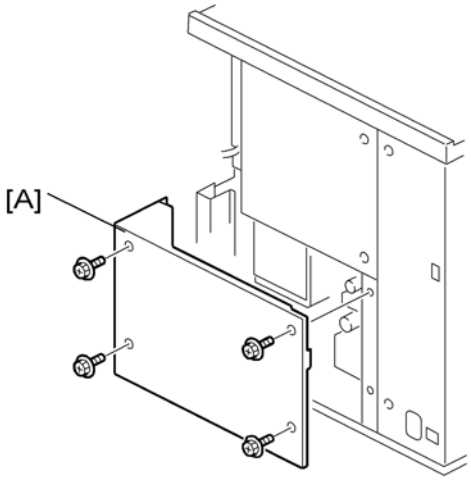

d447i109

10. Remove the right rear lower cover [A] (x4).

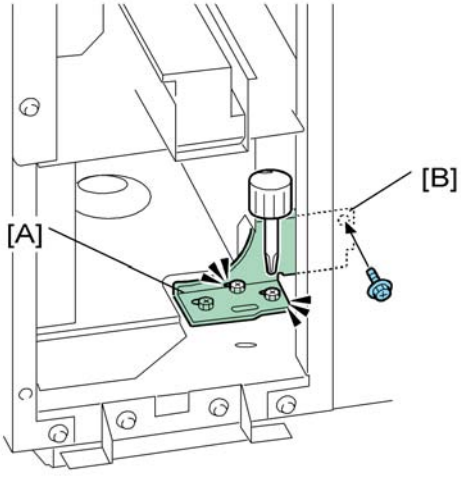

d447i109a

11. Use a short screwdriver to loosen bracket [A] (x2).
12. Fasten the bracket to the upstream unit at [B] (x1).
13. Tighten the screws (x3).
14. Re-attach the rear covers.

Lock Hasps

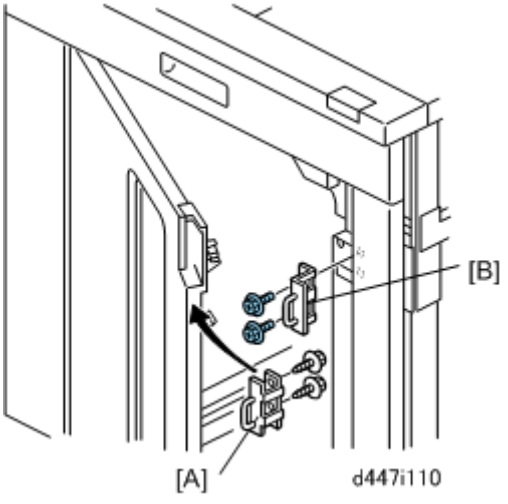

1. Fasten left lock hasp [A] (x2) to the door.
2. Fasten right lock hasp [B] to the door frame (x2).

Height Adjustment

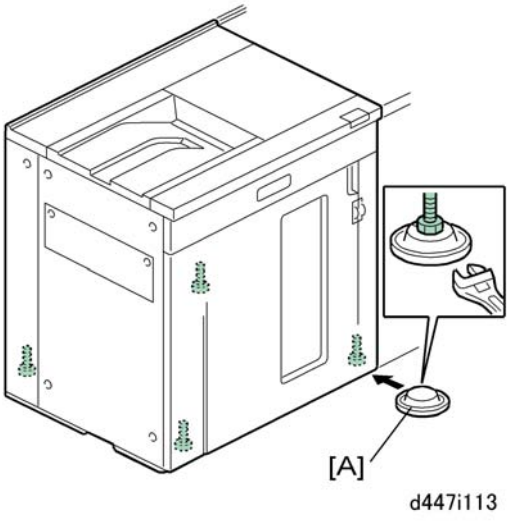

1. Set the leveling shoes [A].
2. Adjust the height of the unit and make sure that it is level.

   If this unit is to be installed to the left of the mainframe (D095 or M07), the following adjustment procedure is required. If not, go to the next section "Power Cord, Breaker Switch Test".

1. Turn on the main power switch.

2. Enter the SP mode, and then execute SP5-805-016.

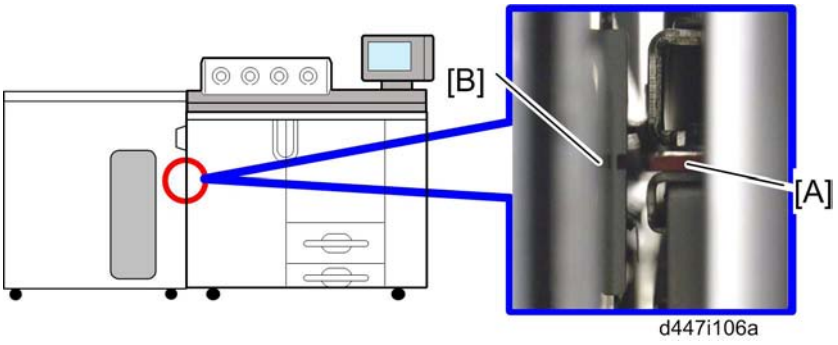

3. Check the paper exit guide plate [A] of the mainframe and relay guide plate [B] of the peripheral from the front side.
4. Remove the rear cover of the peripheral, and then check the paper exit guide plate of the mainframe and relay guide plate of the peripheral from the rear side.

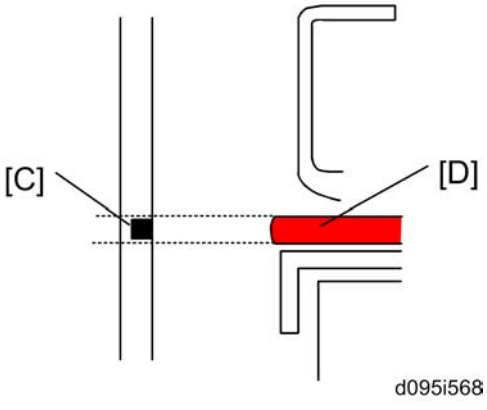

5. If the cutouts [C] on the front and rear side edges of the peripheral's relay guide plate are level with the plate edge [D] on the mainframe, no adjustment is required. Otherwise, go to the next section "Power Cord, Breaker Switch Test".

Note

- The upper edge of the cutouts must not be above the top edge of plate edge [D], and the lower edge of the cutouts must not be below the bottom edge of plate edge [D])

6. Adjust the feet of the mainframe or peripheral so that the cutouts at the front and rear [C] are level with the plate edge [D], as explained above.

Power Cord, Breaker Switch Test

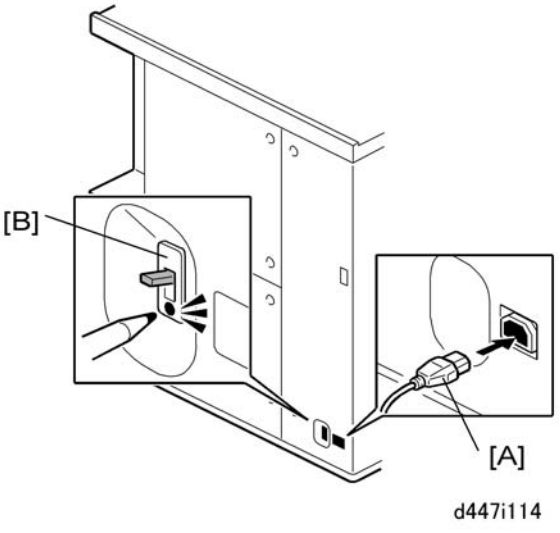

1. Insert the socket of the power cord [A] into the power connection point.

   Important

   - In case of using this unit in China, do not use this power cord in the accessories of the High Capacity Stacker (D447). Ask your supervisor and use a power cord specified for China's usage.

2. Connect the power supply cord plug into a power outlet.
3. Test the breaker switch [B] (☛ "Installation" > "Common Adjustments" > "Breaker Switch Testing").

Check for Skew and Correct Side-to-Side Registration

1. Load some A3/DLT paper in Tray 2 of the main machine.
2. Make several copies that will exit to the top tray.
3. Watch each sheet as it exits the machine to check for the presence of skew, and check that the side-to-side registration is correct. (☛page 302 "Skew and Side-to-Side Adjustment")

Docking: Downstream

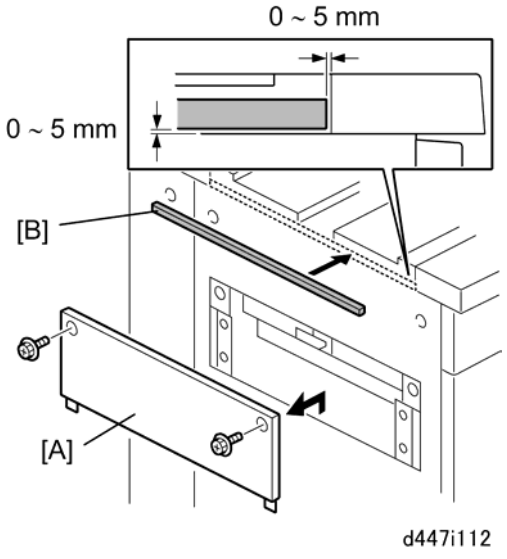

Important

- **Do this procedure only if another a second high capacity stacker unit will be installed..**

1. Remove the left exit cover [A] from the left side of the unit (x2).
    - The joint bracket of the downstream unit will be attached here (x4).
2. Peel the tape from the back of the sponge strip [B] and attach the strip as shown above.

Roll-Away Cart (D456)

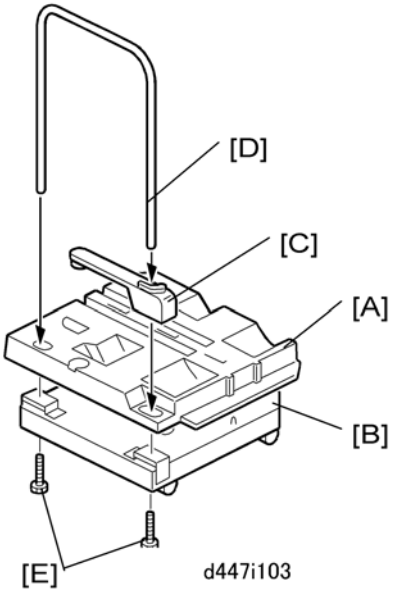

1. Align the holes in the brackets of the paper tray [A] with the studs of the tray base [B].
2. Set the holes over the studs.
3. Set the paper press lever [C] into the recessed cut-out in the paper tray.
4. Insert the ends of the tray cart handle [D] into the handle holes. One end of the handle passes through the paper press lever on the paper tray.

d447i115

5. Lay the assembly down with the handles on the floor.
6. Fasten the end of each handle (x1 each M10x25).
7. Make sure that both screws [E] are fastened securely.

8. Set the cart upright on its casters.

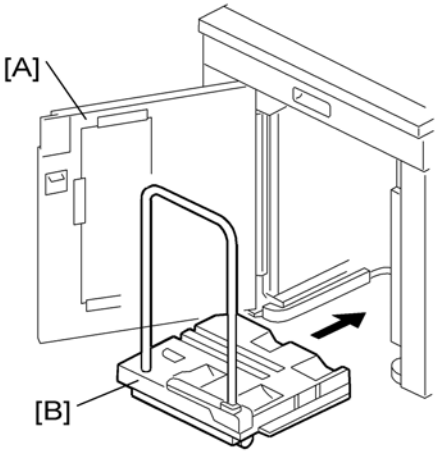

d447i111

9. Open the front door [A].
10. Push the tray cart [B] into the unit and close the door.

Bridge Unit BU5000 (D379)

Accessory Check

No.	Description	Q'ty
1	Vertical Bridge Motor	1
2	Inner Lower Cover	1
3	Jam Removal Lever	1
4	Jam Removal Knob	1
5	Relay Connector	1
6	Inner Upper Cover	1
7	Paper Tray Decal	1
8	Screw: M3x8	2
	Screw: M4x8	5
	Tapping Screw: M4x8 (blue)	9
	Screw: M4x10	1
9	Timing Belt	1

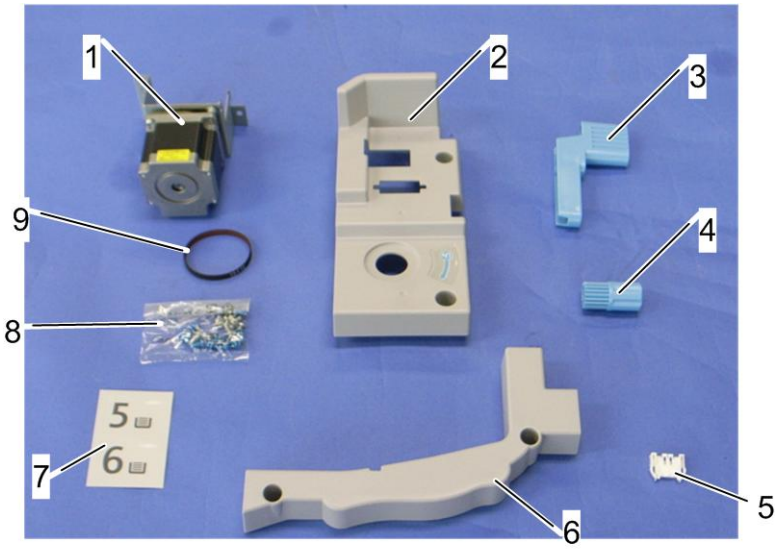

d379i503

Installation

⚠ CAUTION

- Turn the machine power off and unplug it from the power source before starting the following procedure. (☛ page 58 "Correct Procedure to Turn Off the Power ")

Note

- The Bridge Unit BU5000 (D379) can be used only when the LCIT RT 5020 (D355) is installed on the mainframe.

Horizontal Bridge Unit

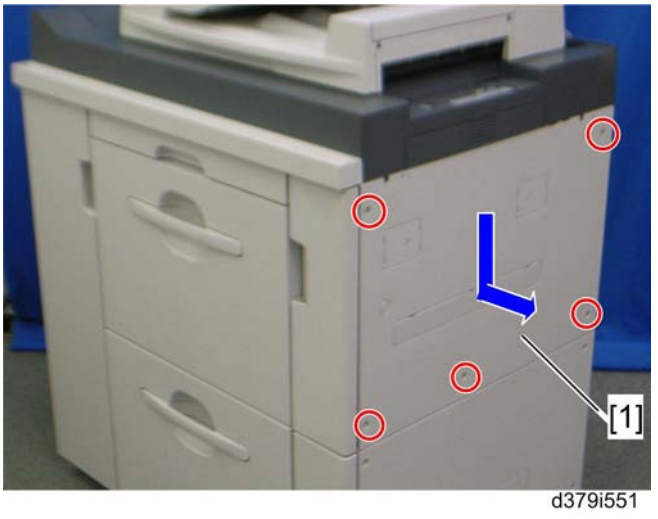

1. Remove the right upper cover (x 5)

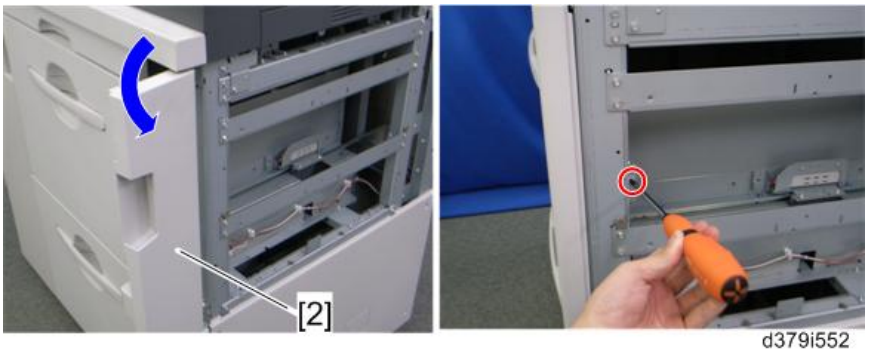

2. Open the front right door [2] (x 1)

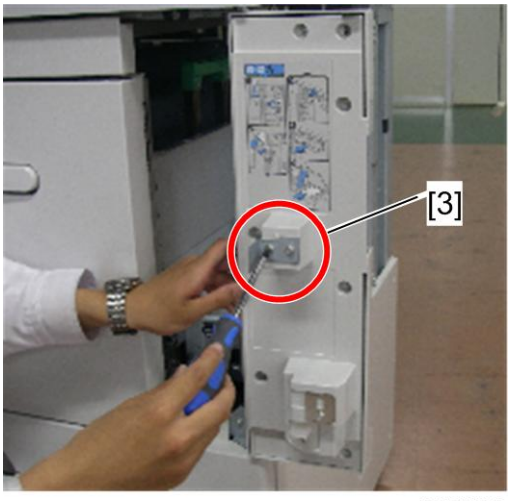

d379i504

3. Remove the bracket [3] (x 2)

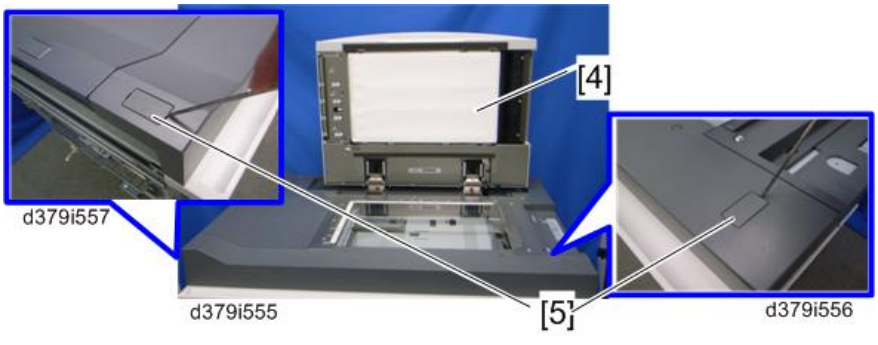

4. Open the ADF [4].
5. Remove the screw covers [5].

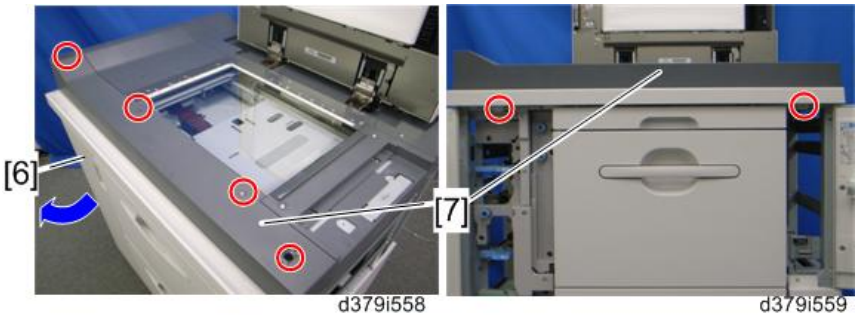

6. Open the front left door [6].
7. Remove the front top cover [7] (x 6).

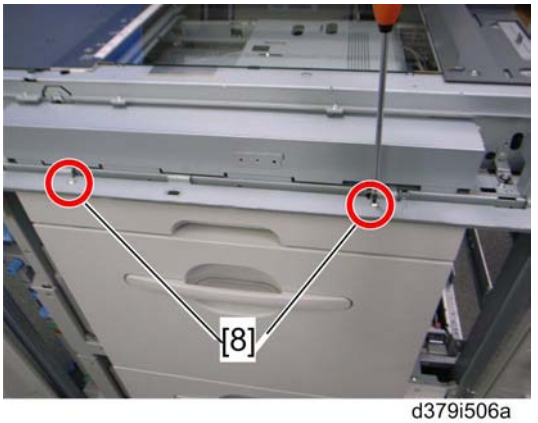

d379i506a

8. Remove two screws [8].

Note

- Keep these screws. These screws are necessary for a later step.

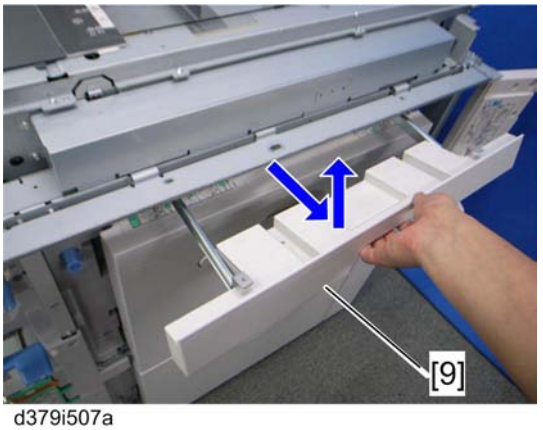

d379i507a

9. Pull out the horizontal bridge unit cover [9] and then remove it.

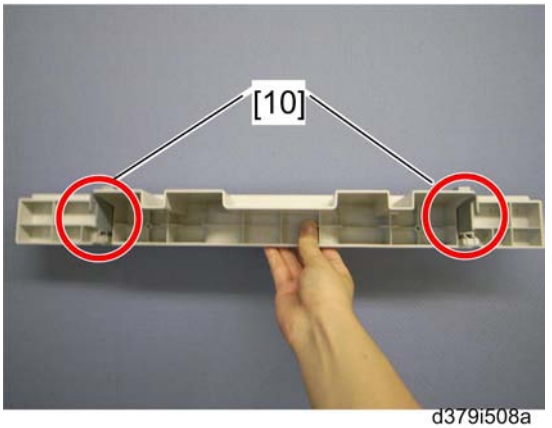

d379i508a

10. Remove two brackets [10] from the horizontal bridge unit cover (x 1 each).

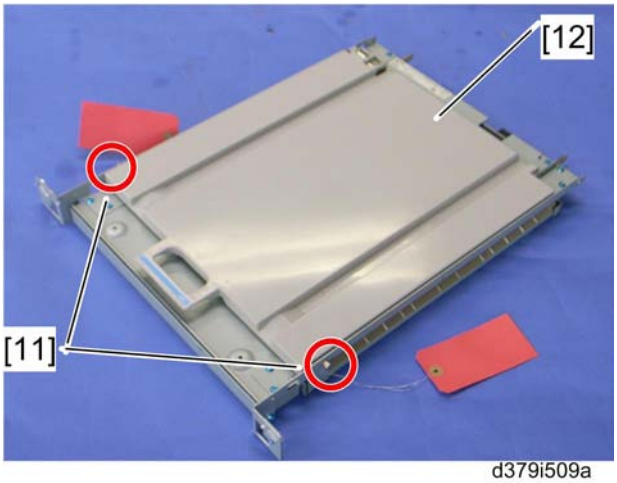

d379i509a

11. Remove two step screws [11] from the horizontal bridge unit [12].

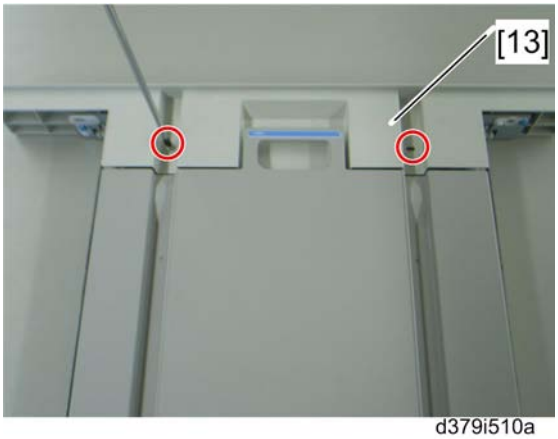

d379i510a

12. Attach the horizontal bridge unit cover [13] to the horizontal bridge unit (x 2: removed in step 5).

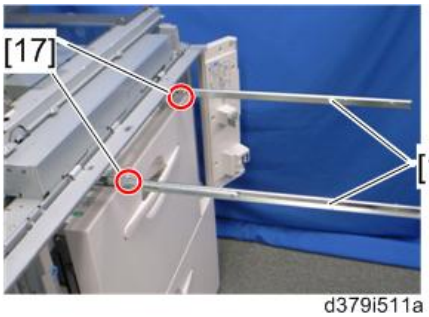

d379i511a

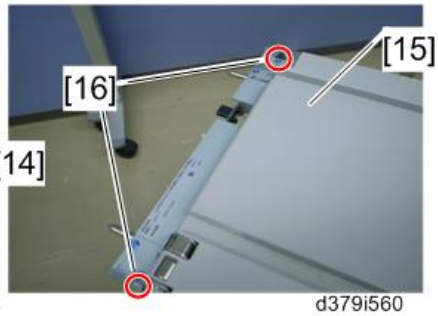

d379i560

13. Pull the rails [14] out fully until these rails stop.

14. Install the rear side of the horizontal bridge unit [15] on the rails.
    - First, align the two rear cutouts [16] of the horizontal bridge unit with the two rivets [17] on the rails and install the rear side of the horizontal bridge unit.

d379i512

15. Install the front side of the horizontal bridge unit on the rails as shown.
    - Align the two front cutouts with the two front rivets, and install the horizontal bridge unit completely.

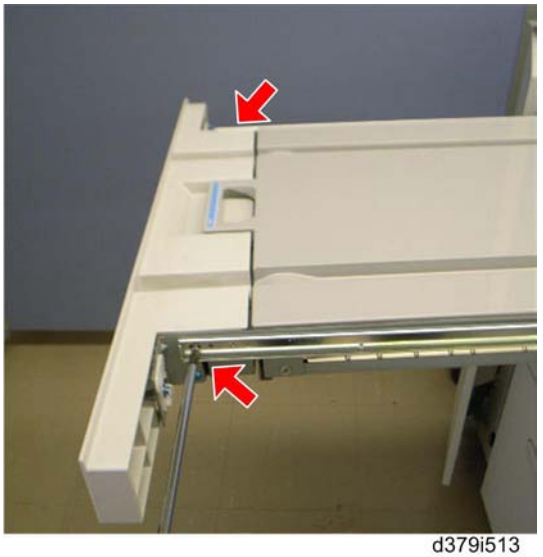

d379i513

16. Secure the horizontal bridge unit with the rails (x 2: M3x8)
17. Push the horizontal bridge unit into the LCT.
18. Re-attach the front top cover (x 2).

Vertical Bridge Unit

Important

- Before installing this unit, install the horizontal bridge unit first.

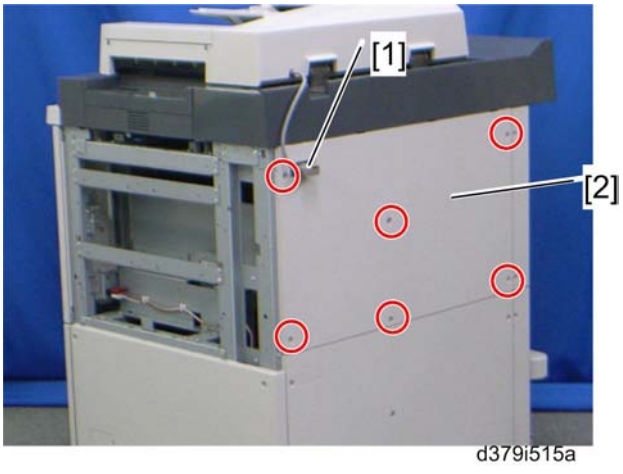

1. Remove the DF I/F cable [1].
2. Remove the rear upper cover [2] (x 6).

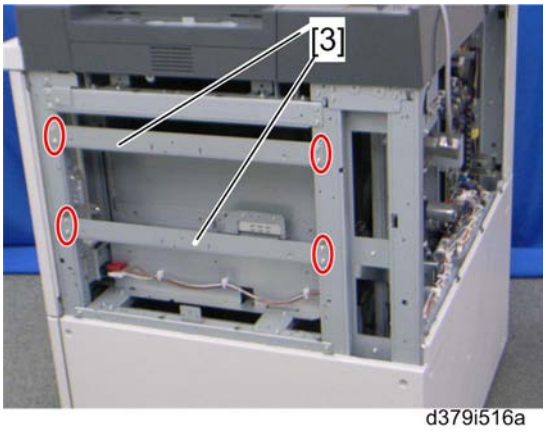

3. Remove the two stays [3] (x 4 each).

d379i517a

4. Pull out the upper tray [4] and horizontal bridge unit [5].

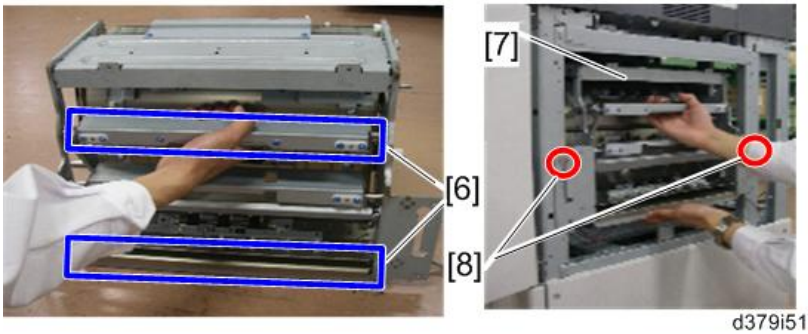

d379i518a

5. Grip two parts [6] of the vertical bridge unit.
6. Install the vertical bridge unit [7] in the right side of the LCT. To do this, hang the two holes in the bridge unit on the two step screws [8] on the LCT.

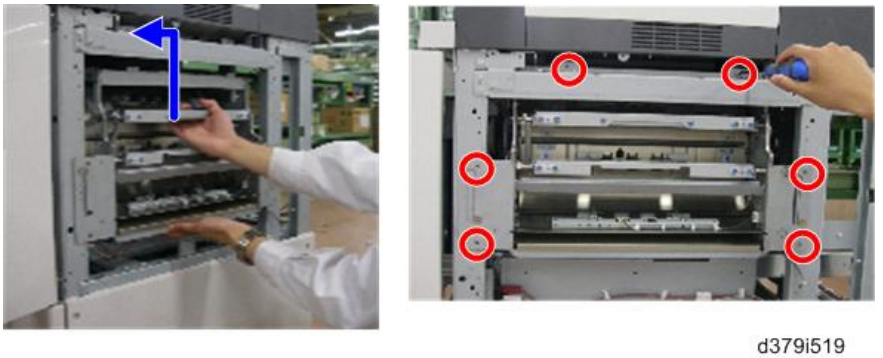

d379i519

7. Lift up the vertical bridge unit and then slide it to the front side.
8. Secure the vertical bridge unit (x 6: tapping screw M4x8 (blue)).

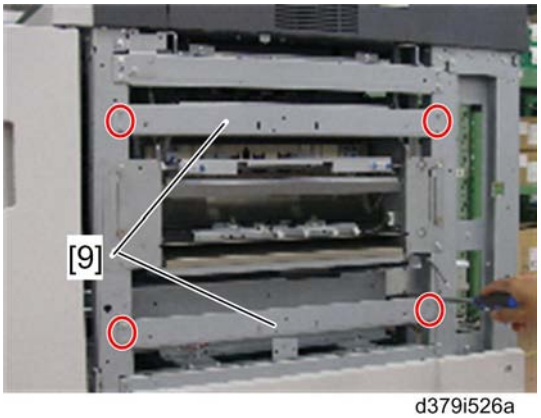

d379i526a

9. Reattach the two stays [9] which were removed in step 3 to the right side frame of the LCT.

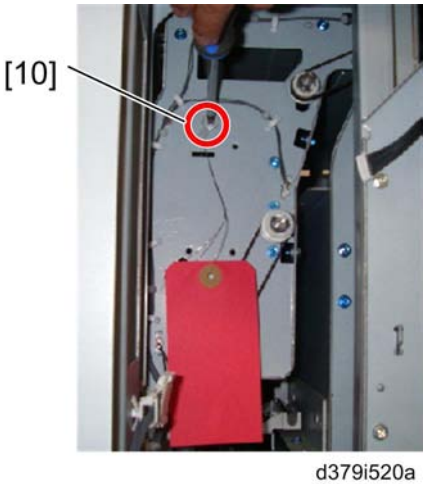

d379i520a

10. Remove the step screw [10] with a red tag on the rear side of the vertical bridge unit.

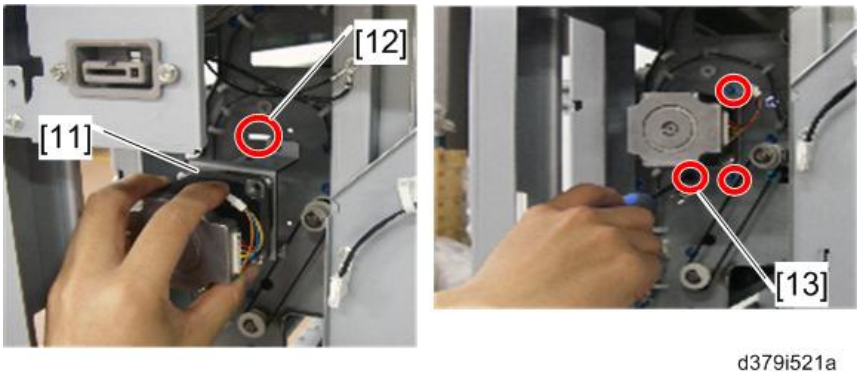

d379i521a

11. Install the vertical bridge motor unit [11] in the rear side of the vertical bridge unit.
    - Insert the tab of the motor bracket in the cutout [12].
12. Secure the vertical bridge motor unit with three screws.

- Fist secure three screws loosely, and then tighten screw [13] (tapping screws M4x8 (blue)) first. Screw [13] is a positioning screw.

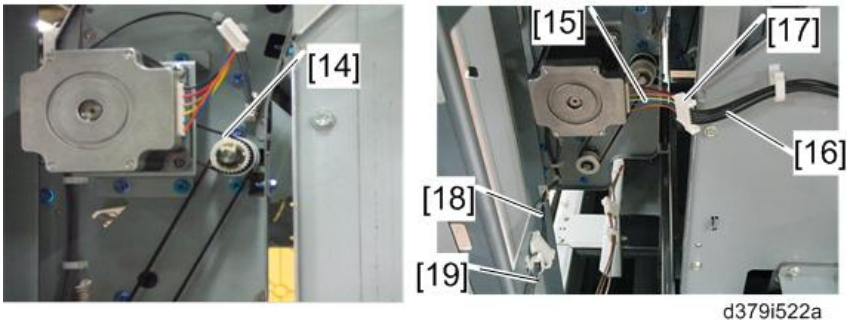

d379i522a

13. Install the timing belt [14] as shown.
14. Connect the motor harness [15] to the harness [16] from the LCT with the relay connector [17].
15. Connect the harness [18] from the vertical bridge unit to the harness [19] from the LCT, and then clamp it (x 1).

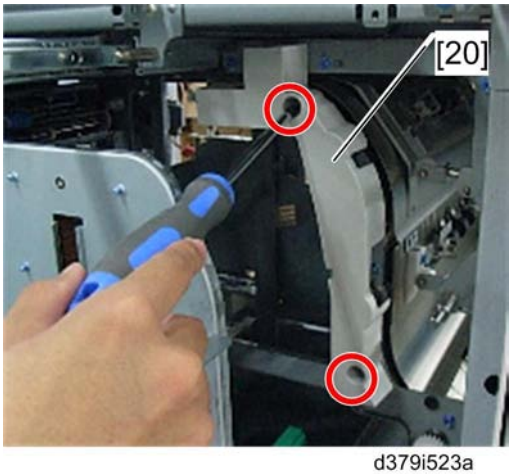

d379i523a

16. Attach the inner upper cover [20] (x 2: M4x8).

d379i524a

17. Attach the inner lower cover [21] (x 2: M4x8).

d379i525a

18. Attach the jam removal lever [22] (x 1: M4x10).
19. Attach the jam removal knob [23] (x 1: M4x8).
20. Reattach the right upper cover (x 5).
21. Reattach the rear upper cover (x 6 each).
22. Reassemble the LCT.

LCIT RT5050 (D532)

Accessory Check

Check the quantity and condition of the accessories against the following list.

No.	Description	Q'ty
1	Cushion	1
2	Top Right Cover	1
3	Rear Upper Left Cover	1
4	Leveling Shoes	4
5	Screw: M4x20	3
6	Screw: M4x8	1
7	Stud Screw	3
8	Upper Joint Pins	2
9	Lower Joint Pins	2
10	Washer	1
11	Paper Set Decal	2
12	Paper Tray Decal	1
13	Paper Tray and Size Decal Sheet	1

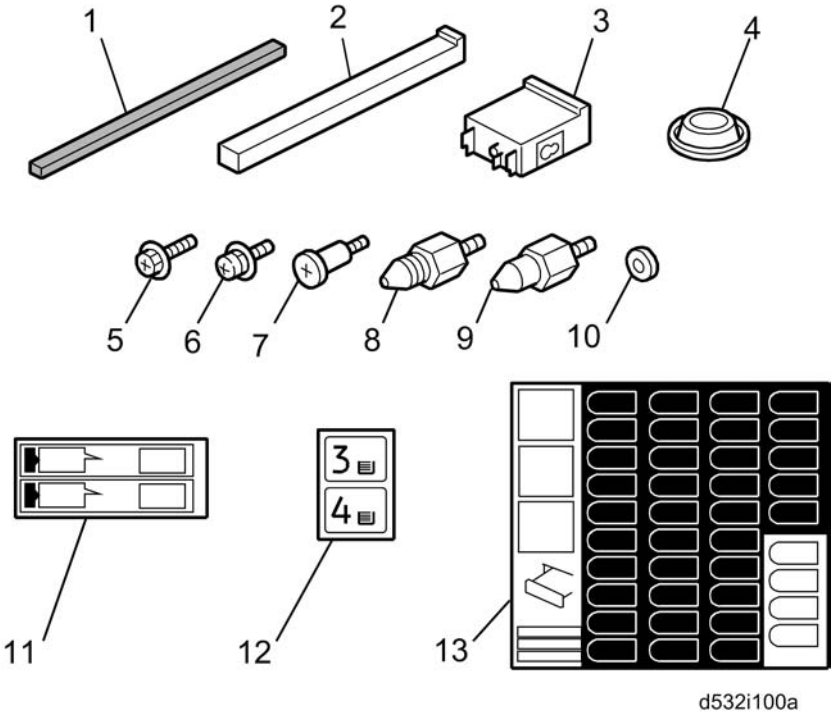

Installation Procedure for Printer (M077)

⚠CAUTION

- Turn off the machine and unplug it from the power source before you start the installation procedure. (page 58)

Naming for double LCT units

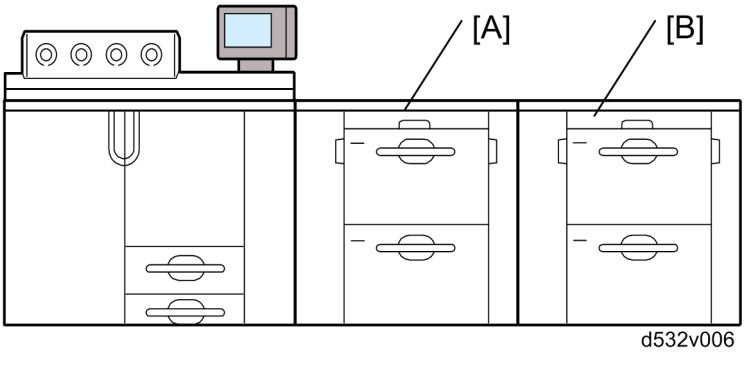

The drawing above shows the mainframe with the two LCTs installed. In this section, the LCT [A] which is placed next to the mainframe is called the "1st LCT", and the LCT [B] which is placed next to the 1st LCT is called the "2nd LCT".

Preparing for Installation

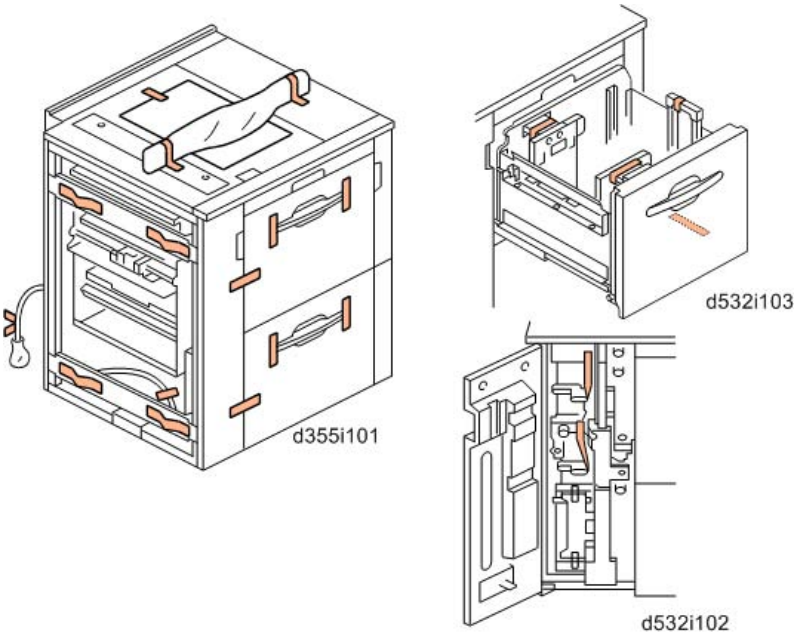

1. Remove all tapes and retainers in the LCT.

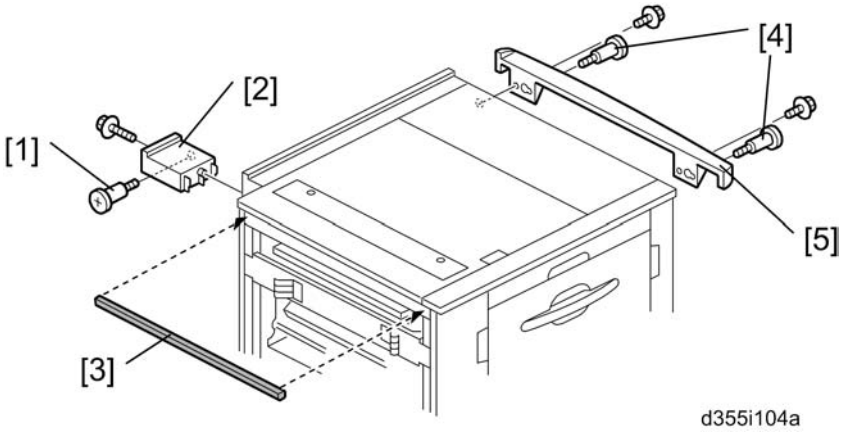

2. Attach the stud screw [1] to the rear side of the LCT.
3. Attach the top rear left cover [2] (x 1: M4x20)
4. Attach the cushion [3] to the left top edge of the LCT.

If only this LCT is to be installed;

5. Attach the stud screws [4] to the left side of the LCT.
6. Attach the top right cover [5] (x 2: M4x20)

Installation for only one LCT unit

1. Remove the covers from the right side of the mainframe.
   - Cover [A]: (x 1), others: (hooks)

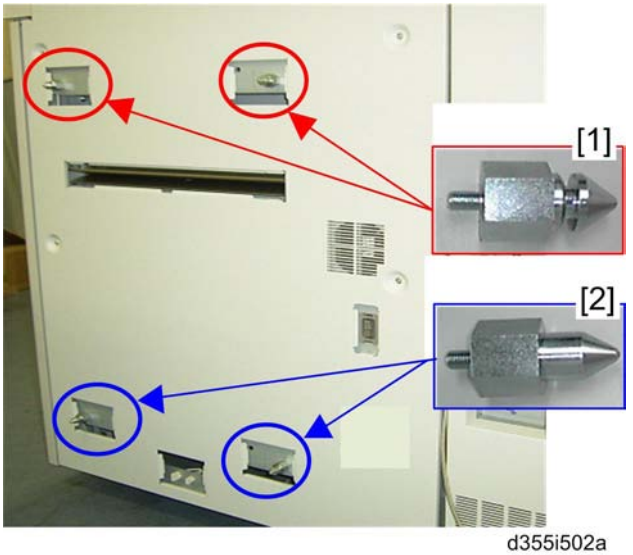

d355i502a

2. Install the upper pins [1] with the grooved rings on the right upper cover.
3. Install the lower pins [2] on the right lower cover.

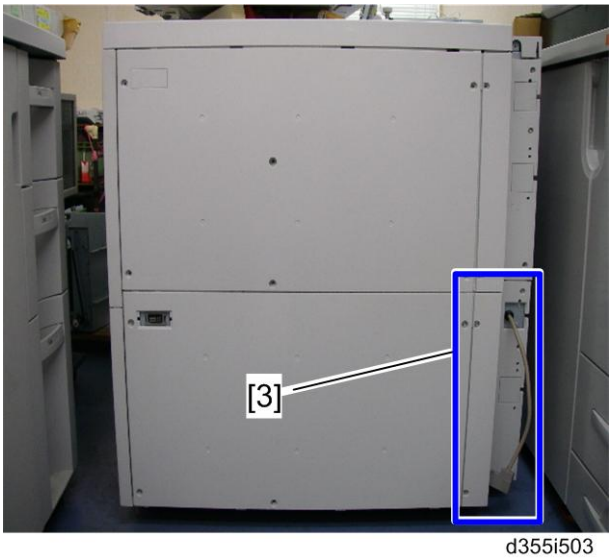

d355i503

4. Remove the lower rear left cover [3] of the LCT (x 5)

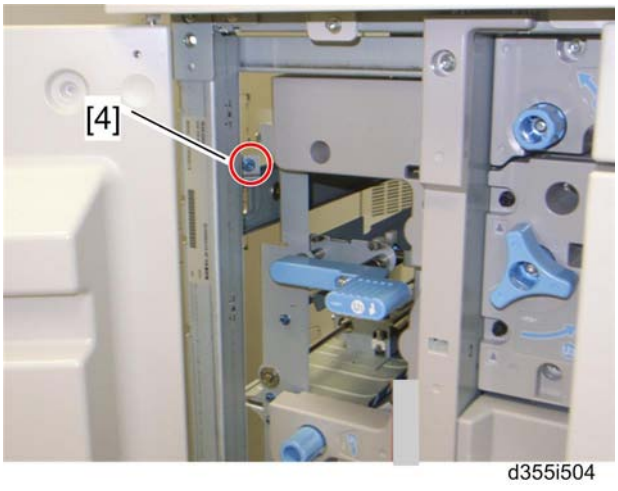

5. Open the front door of the LCT and remove screw [4].

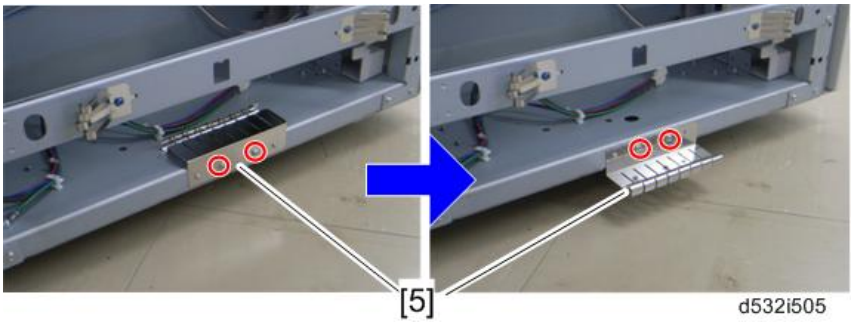

6. Remove the ground plate [5] (x 2).
7. Turn over the ground plate and use the screws to fasten it to the same holes (x 2).

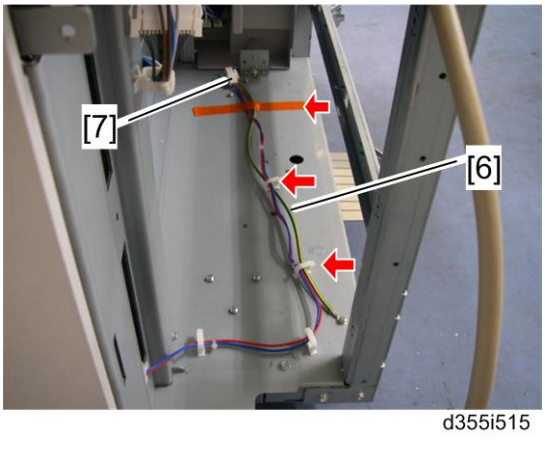

8. Release the ground cable [6] (tape x 1, x 2).
9. If the tray heater will not be used, keep the LCT tray heater relay harness [7] clamped.

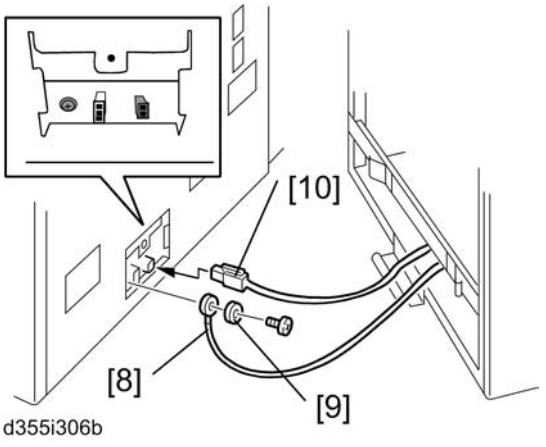

10. Move the LCT to the right side of the mainframe.
11. Fasten the ground cable [8] with the washer [9] to the mainframe (x 1: M4x8).
12. If the tray heater of the LCIT RT5050 will be used, attach the LCT heater relay harness [10] to the mainframe.

Important

- **If the customer will use coated paper in high temperature and high humidity conditions, the tray heater of the LCIT RT5050 is greatly needed. Connect the LCT relay harness at this moment.**

13. Align the LCT on the joint pins and then move the LCT much closer.
14. Dock the LCT with the right side of the mainframe, after confirming that the ground cable [8] and LCT tray heater relay harness [10] are not pinched between the LCT and the mainframe.

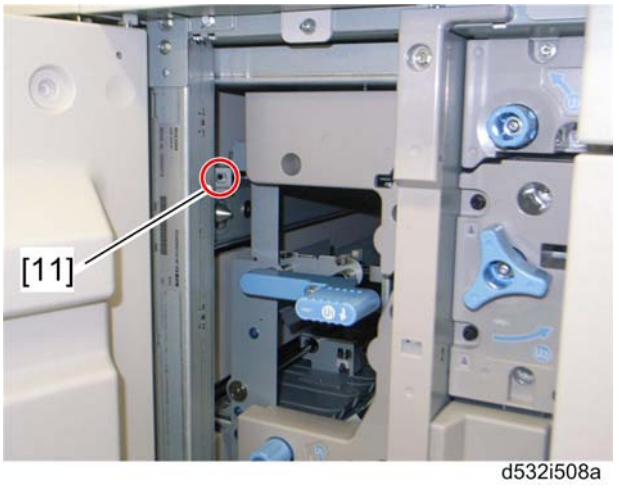

15. Fasten screw [11] to lock the LCT to the side of the mainframe.
16. Close the front door of the LCT.

17. Reattach the lower rear left cover to the LCT (x 5).

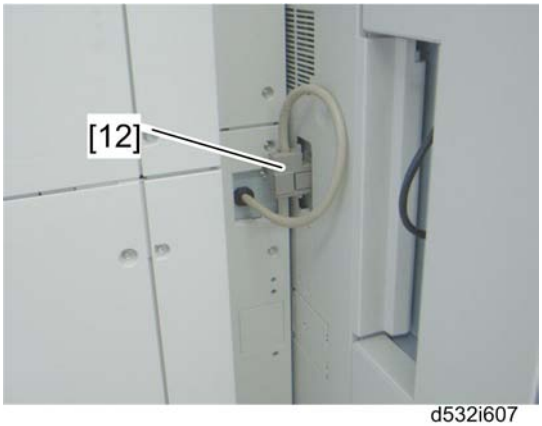

d532i607

18. Attach I/F connectors [12] to the mainframe.

d532i510

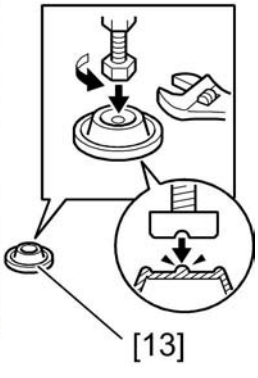

19. Insert the leveling shoes [13] (x 4) under the leveling feet and level the LCT.
20. Adjust the LCT level within ± 5 mm by rotating each nut on the leveling shoes.

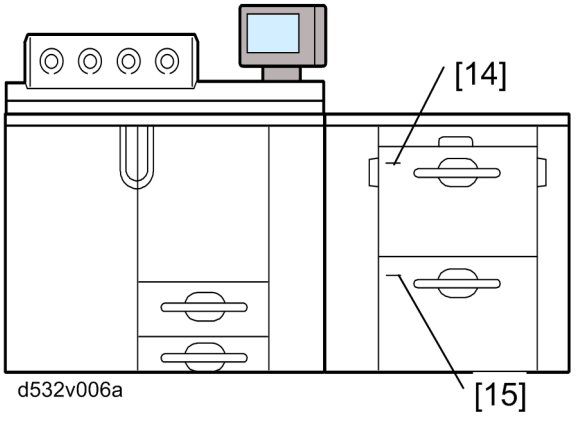

21. Attach the "Tray 3" decal above the line [14] on the LCT and the "Tray 4" decal above the line [15].

Note

- When attaching these decals, align the bottom edge of each decal with the line on the each tray cover.

22. .Change the tray size with User Tools (Tray Paper Settings).

Installation for two LCT units

1. Install the bridge tray unit in the 1st LCT (page 158 "Bridge Unit BU5000 (D379)").
2. Remove all tapes and retainers in the 2nd LCT.

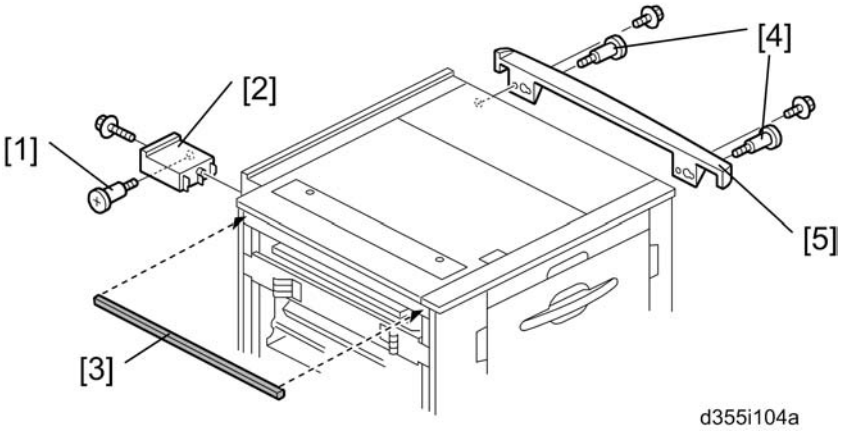

3. Attach the stud screw [1] to the rear side of the 2nd LCT.
4. Attach the top rear left cover [2] (x 1: M4x20)
5. Attach the cushion [3] to the left top edge of the LCT.
6. Attach the stud screws [4] to the left side of the 2nd LCT.

7. Attach the top right cover [5] (x 2: M4x20).

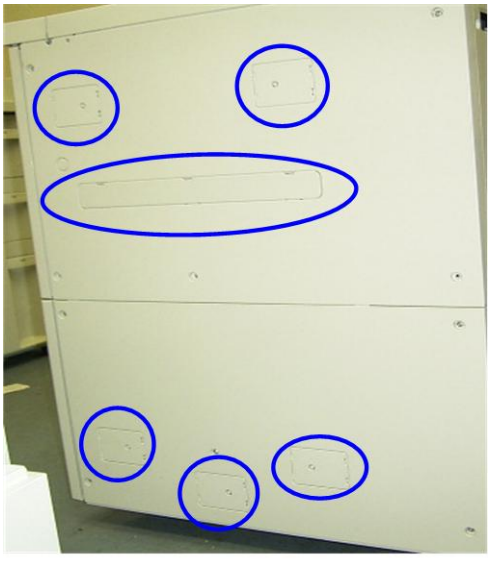

d355i511

8. Remove the covers from the right side of the 1st LCT.

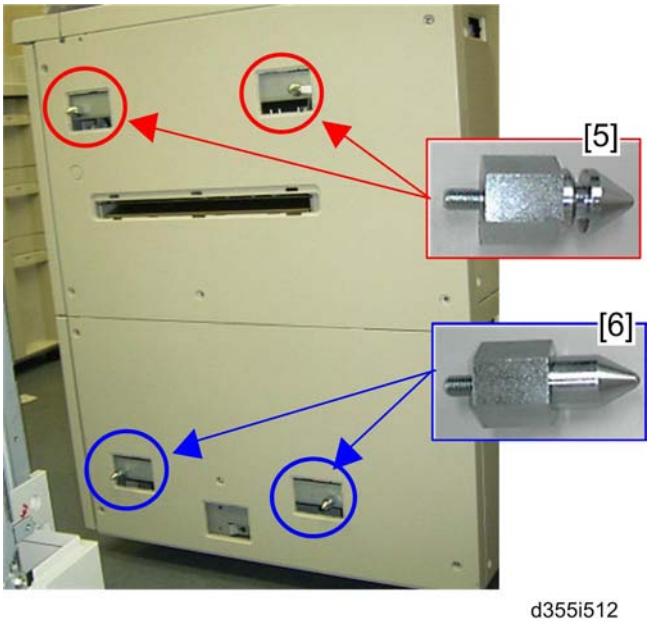

d355i512

9. Install the upper pins [5] with the grooved rings on the right upper cover.
10. Install the lower pins [6] on the right lower cover.

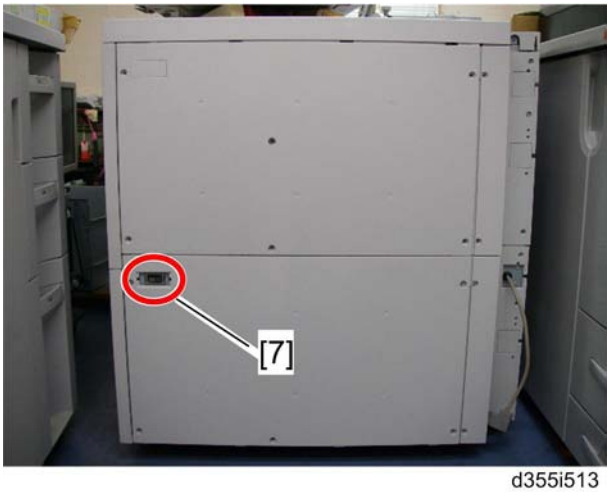

d355i513

11. I/F cover [7] of the 1st LCT

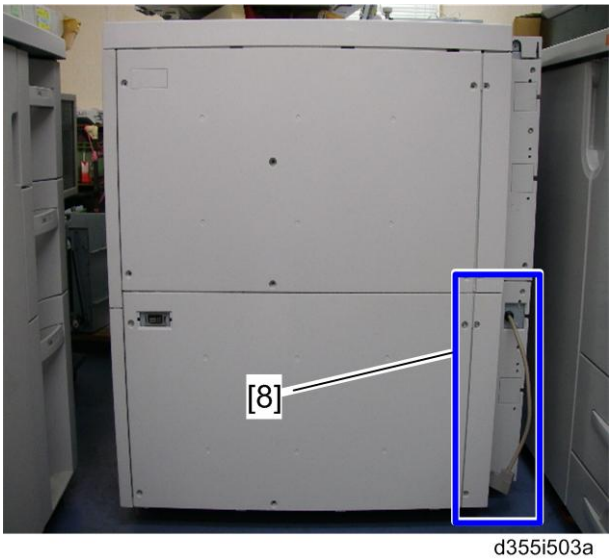

d355i503a

12. Remove the lower rear left cover [8] of the 2nd LCT (x 5)

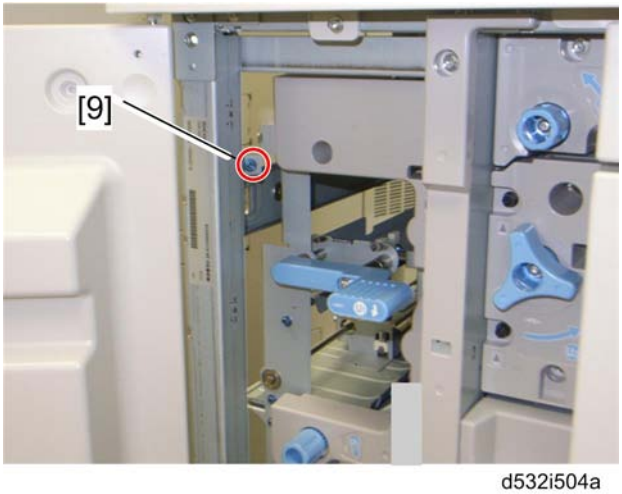

d532i504a

13. Open the front cover of the 2nd LCT and remove screw [9].

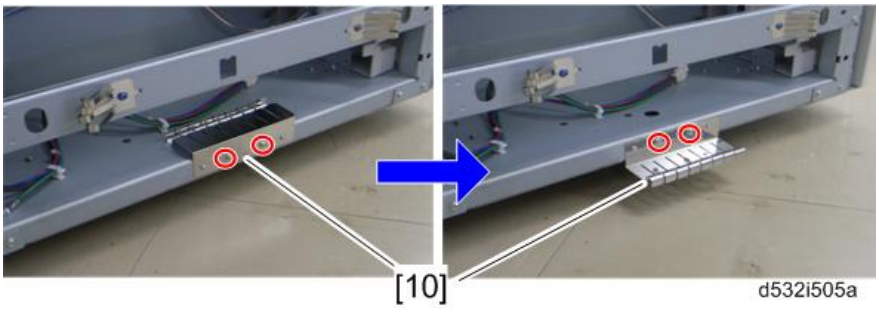

d532i505a

14. Remove the ground plate [10] from the 2nd LCT (x 2).
15. Turn over the ground plate and use the screws to fasten it to the same holes (x 2).

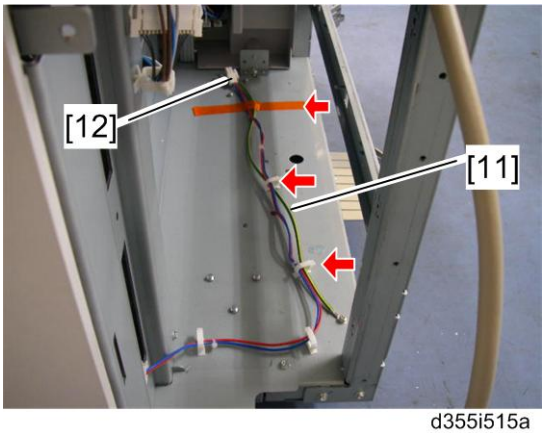

d355i515a

16. Release the ground cable [11] (tape x 1, x 2).
17. If the tray heater will not be used, keep the 2nd LCT tray heater relay harness [12] clamped.

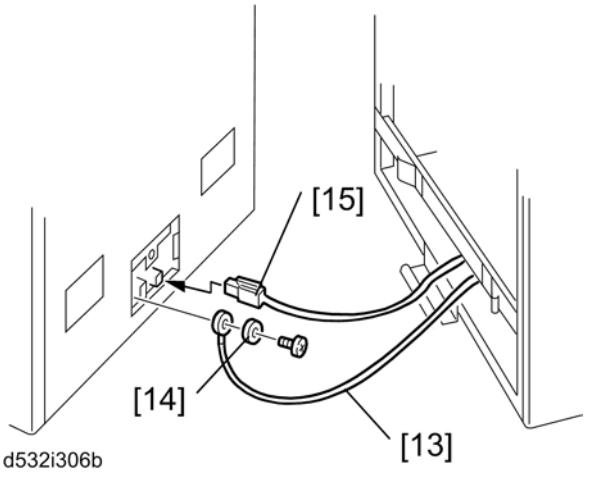

18. Move the 2nd LCT to the right side of the 1st LCT.
19. Fasten the ground cable [13] with the washer [14] to the 1st LCT (x 1: M4x8).
20. If the tray heater of the LCIT RT5050 will be used, attach the 2nd LCT heater relay harness [15] to the 1st LCT.

Important

- **If the customer will use coated paper in high temperature and high humidity conditions, the tray heater of the LCIT RT5050 is greatly needed. Connect the LCT relay harness at this moment.**

21. Align the 2nd LCT on the joint pins and then move the 2nd LCT much closer.
22. Dock the 2nd LCT with the right side of the 1st LCT, after confirming that the ground cable [13] and LCT heater relay harness [15] are not pinched between the 1st LCT and the 2nd LCT.

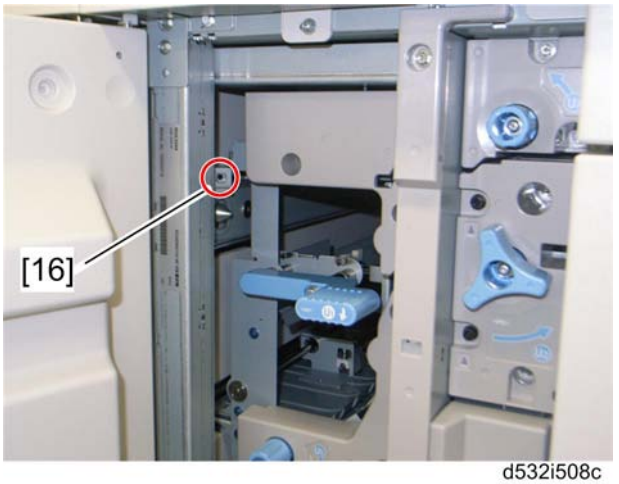

d532i508c

23. Fasten screw [16] to lock the 2nd LCT to the side of the 1st LCT.
24. Close the front door of the 2nd LCT.

25. Reattach the lower rear left cover to the 2nd LCT (x 5).

26. Attach I/F connector [17] of the 2nd LCT to the 1st LCT.

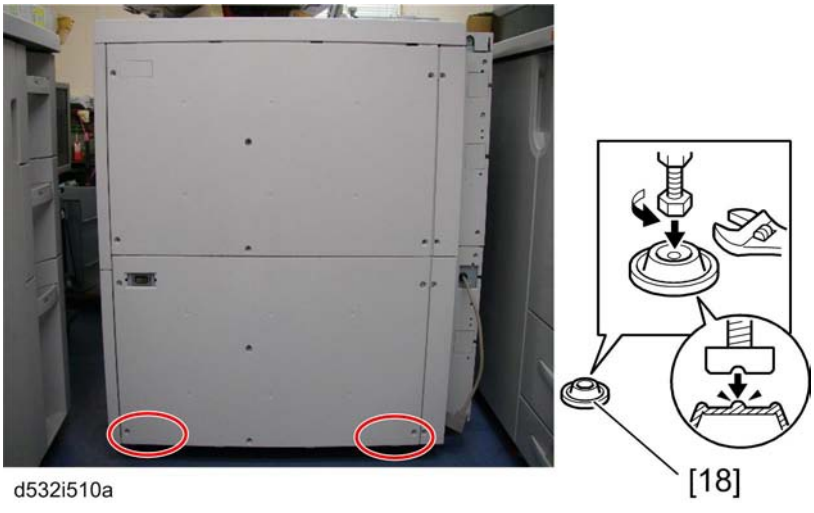

27. Insert the leveling shoes [18] (x 4) under the leveling feet and level the 2nd LCT.
28. Adjust the LCT level within ± 5 mm by rotating each nut on the leveling shoes.

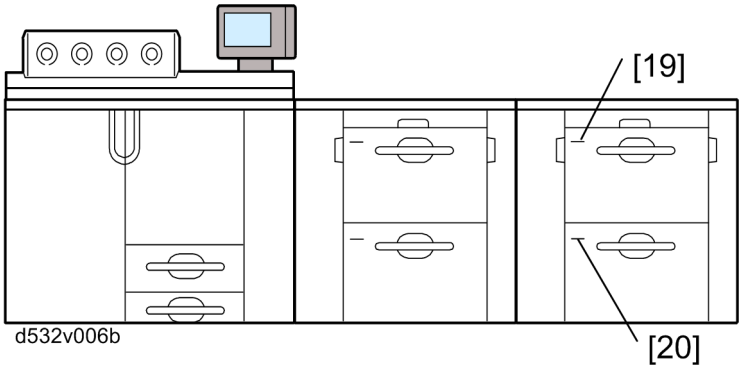

29. Attach the "Tray 5" decal above the line [19] on the LCT and the "Tray 6" decal above the line [20].

Note

- When attaching these decals, align the bottom edge of each decal with the line on the each tray cover.
- These decals are provided with "Bridge Unit BU5000 (D379)".

30. Change the tray size with User Tools (Tray Paper Settings) if needed.

Installation Procedure for Copier (D095)

⚠CAUTION

- Turn off the machine and unplug it from the power source before you start the installation procedure. (☛page 58 "Correct Procedure to Turn Off the Power ")

This LCT requires the Bridge Unit BU5000 (D379) to be installed in the Copier D095. Install the Bridge Unit BU5000 (D379) first before this installation procedure.

Preparing for Installation

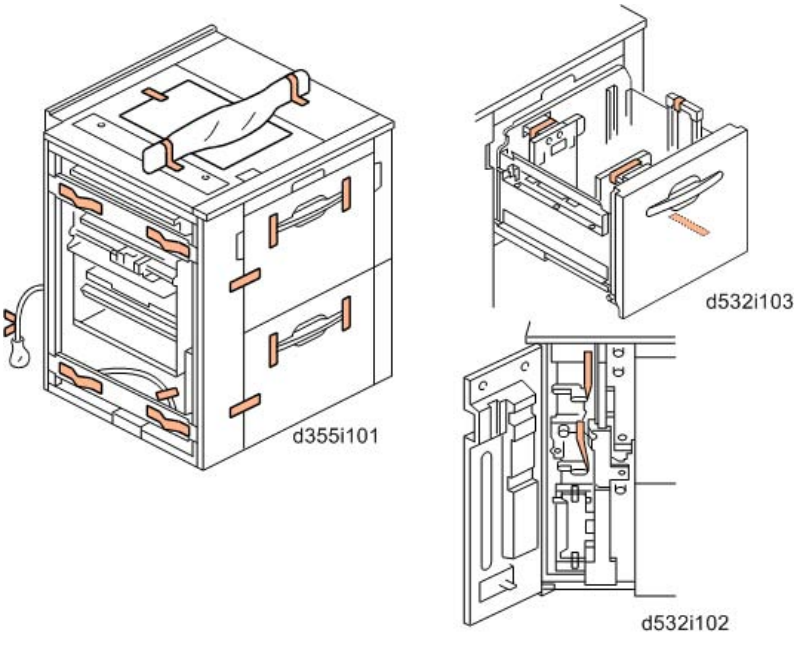

1. Remove all tapes and retainers in the LCT.

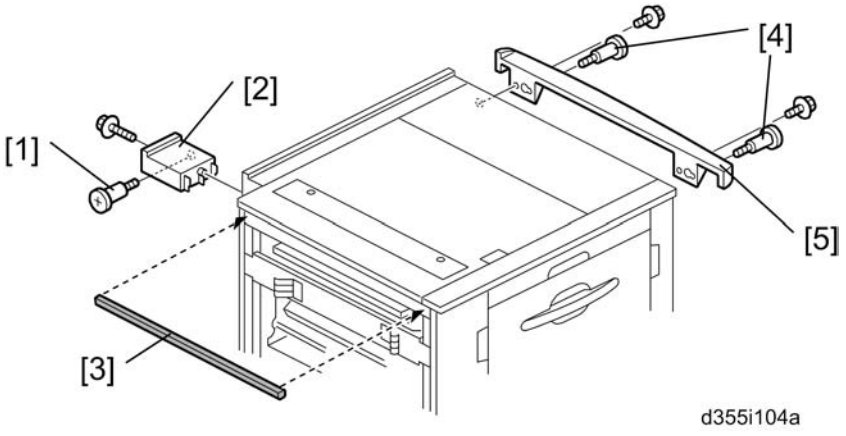

2. Attach the stud screw [1] to the rear side of the LCT.
3. Attach the top rear left cover [2] (x 1: M4x20)
4. Attach the cushion [3] to the left top edge of the LCT.
5. Attach the stud screws [4] to the left side of the LCT.
6. Attach the top right cover [5] (x 2: M4x20)

Installation for two LCT units

1. Install the bridge tray unit in the LCT-MF (page 158 "Bridge Unit BU5000 (D379)").

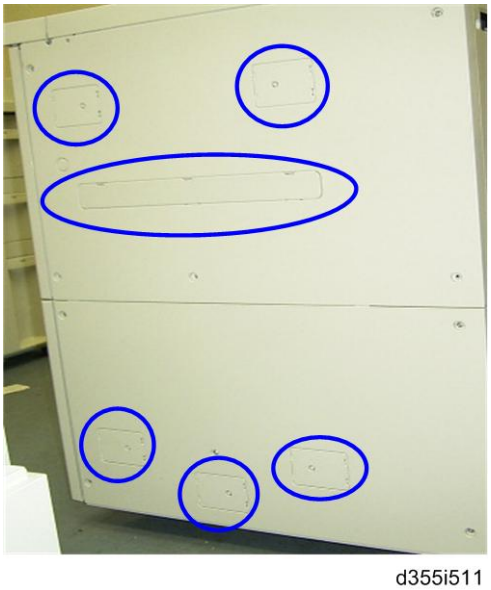

d355i511

2. Remove the covers from the right side of the LCT-MF.

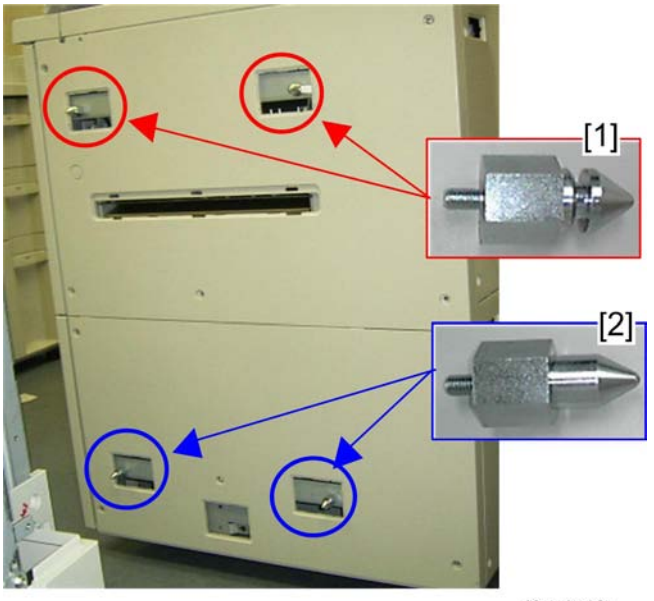

d355i512a

3. Install the upper pins [1] with the grooved rings on the right upper cover.
4. Install the lower pins [2] on the right lower cover.

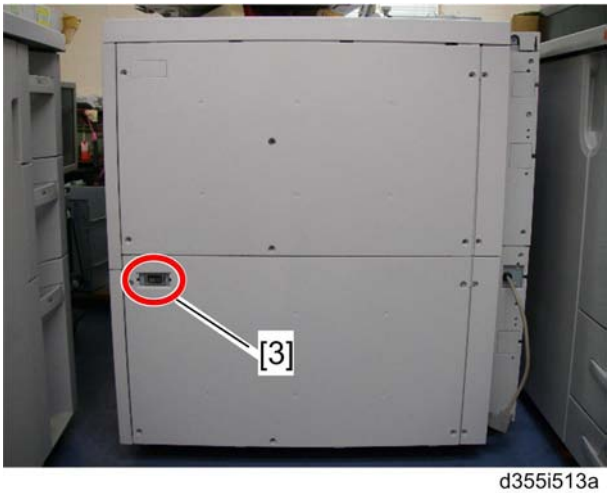

d355i513a

5. I/F cover [3] of the LCT-MF.

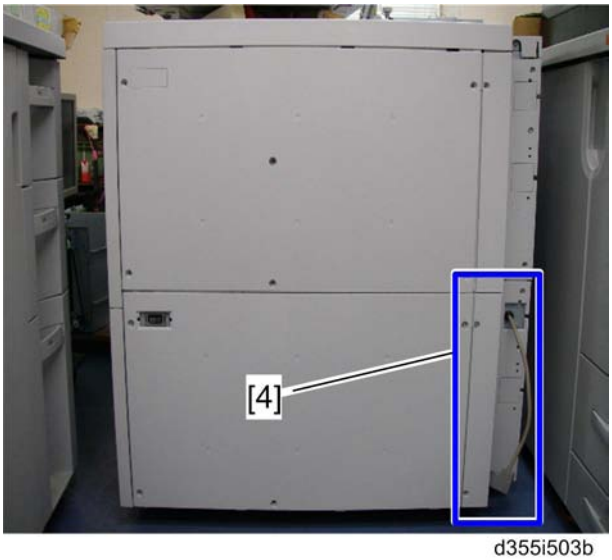

d355i503b

6. Remove the lower rear left cover [4] of the LCT (x 5)

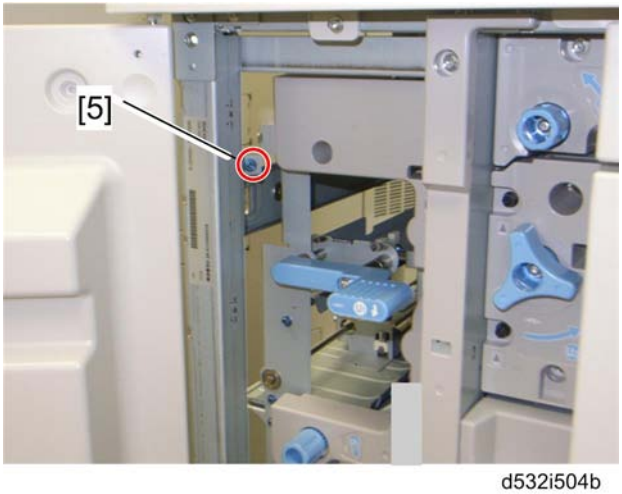

d532i504b

7. Open the front cover of the LCT and remove screw [5].

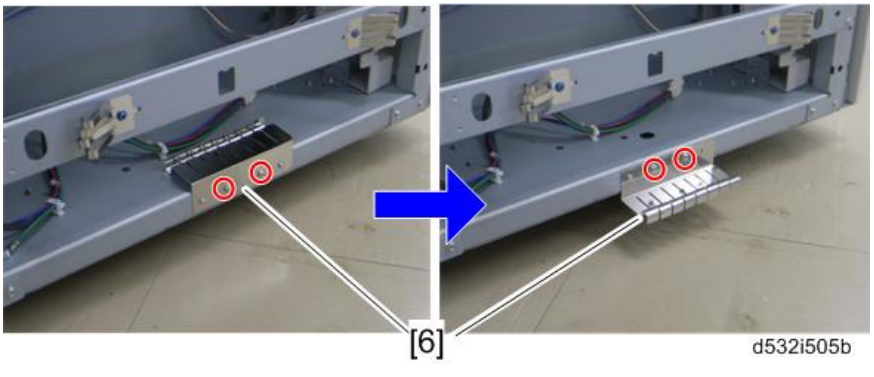

d532i505b

8. Remove the ground plate [6] from the LCT (x 2).
9. Turn over the ground plate and use the screws to fasten it to the same holes (x 2).

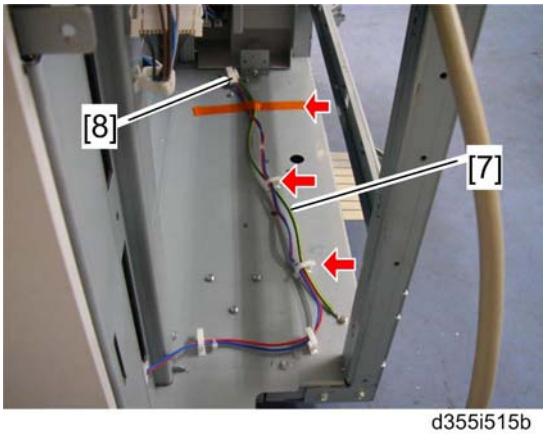

d355i515b

10. Release the ground cable [7] (tape x 1, x 2).
11. If the tray heater will not be used, keep the LCT tray heater relay harness [8] clamped.

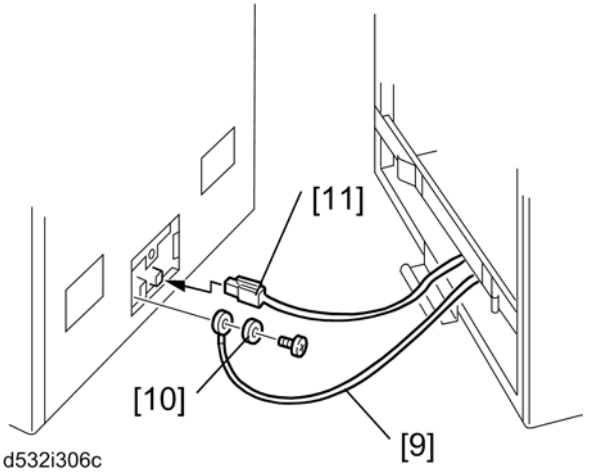

d532i306c

12. Move the LCT to the right side of the LCT-MF.
13. Fasten the ground cable [9] with the washer [10] to the LCT-MF (x 1: M4x8).
14. If the tray heater of the LCIT RT5050 will be used, attach the LCT heater relay harness [11] to the LCT-MF.

Important

- **If the customer will use coated paper in high temperature and high humidity conditions, the tray heater of the LCIT RT5050 is greatly needed. Connect the LCT relay harness at this moment.**

15. Align the LCT on the joint pins and then move the LCT much closer.

16. Dock the LCT with the right side of the LCT-MF after confirming that the ground cable [9] and LCT heater relay harness [11] are not pinched between the LCT-MF and the LCT.

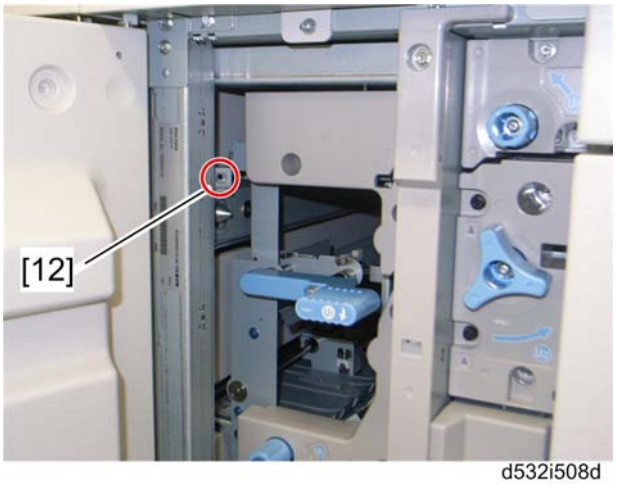

d532i508d

17. Fasten screw [12] to lock the LCT to the side of the LCT-MF.
18. Close the front door of the LCT.
19. Reattach the lower rear left cover to the LCT (x 5).

d532i514a

20. Attach I/F connector [13] of the LCT to the LCT-MF.

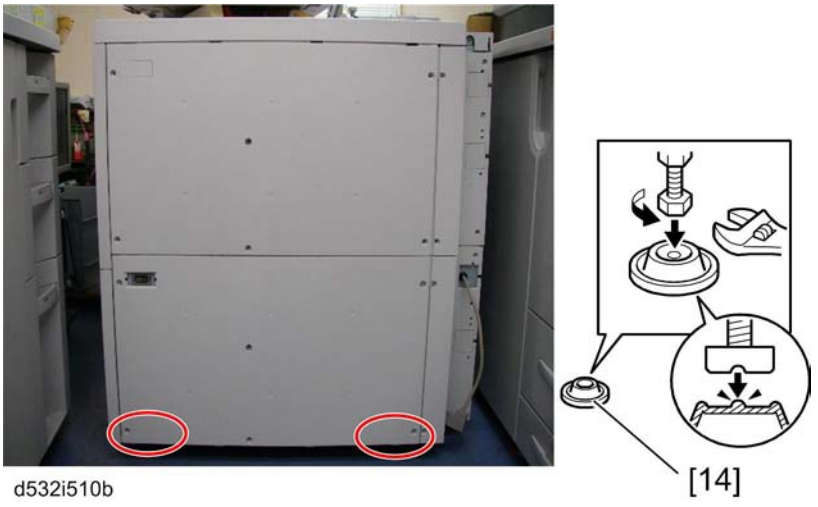

d532i510b

21. Insert the leveling shoes [14] (x 4) under the leveling feet and level the LCT.
22. Adjust the LCT level within ± 5 mm by rotating each nut on the leveling shoes.

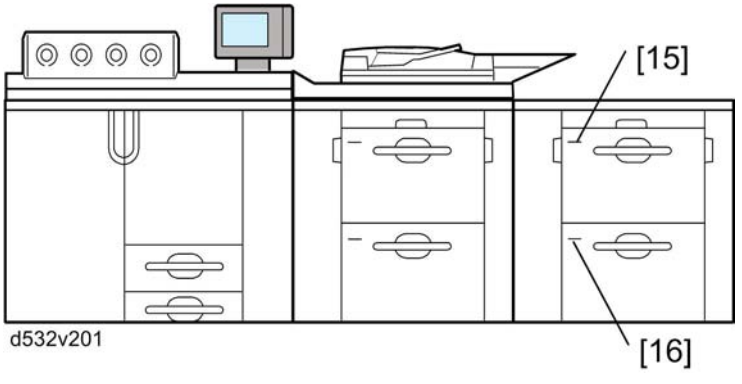

d532v201

23. Attach the "Tray 5" decal above the line [15] on the LCT and the "Tray 6" decal above the line [16].

Note

- When attaching these decals, align the bottom edge of each decal with the line on the each tray cover.
- These decals are provided with "Bridge Unit BU5000 (D379)".

24. Change the tray size with User Tools (Tray Paper Settings) if needed.

LCIT RT5030 (D452)

Note

- This peripheral can be only installed in the M077 model.

Accessories

Check the quantity and condition of the accessories in the box against the following illustration and list:

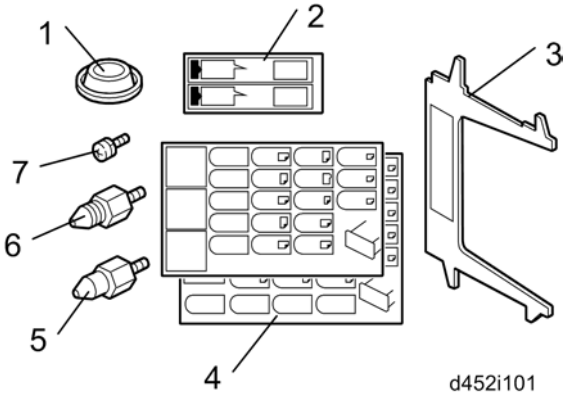

No.	Description	Q'ty
1.	Leveling Shoes	3
2.	Decal – Paper Set	3
3.	Tab Paper End Fence	1
4.	Decal – Paper Size	2
5.	Lower Joint Pins	2
6.	Upper Joint Pins	2
7.	Philips Screw - M4 x 8	1
	Installation Procedure – English (not shown)	1

Note

- The tab paper end fence (3) is located in the LCIT unit, mounted on hooks behind the front door.

Installation

⚠CAUTION

- Make sure that the main machine is switched off and that its power cord is disconnected before doing the following procedure.

Tapes, Retainers

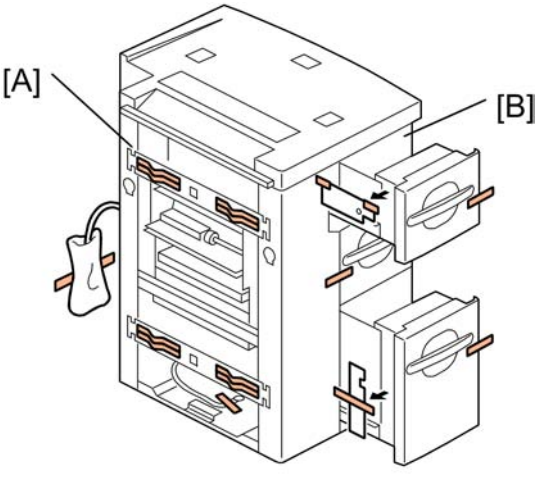

d452i103

1. From the left side [A], remove the visible tape and other items.
2. At the front [B], open the trays and remove the tapes and retainers.

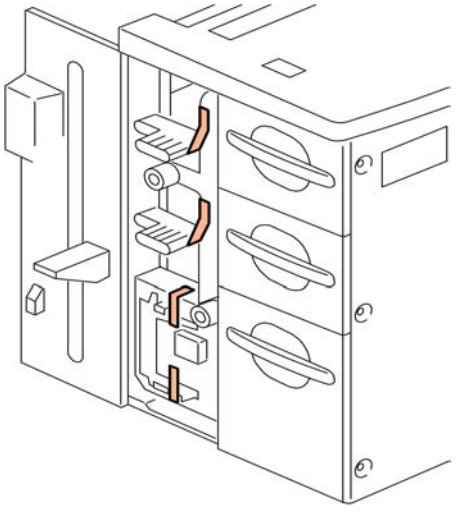

d452i102

3. Open the front door and remove the tapes attached to the levers.

Docking

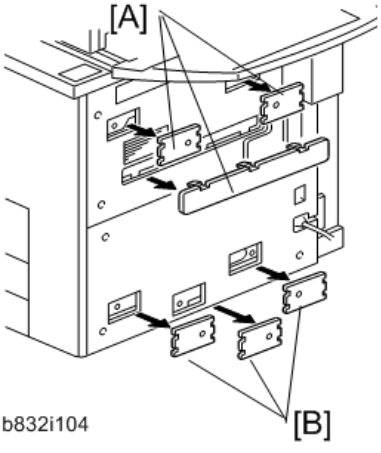

b832i104

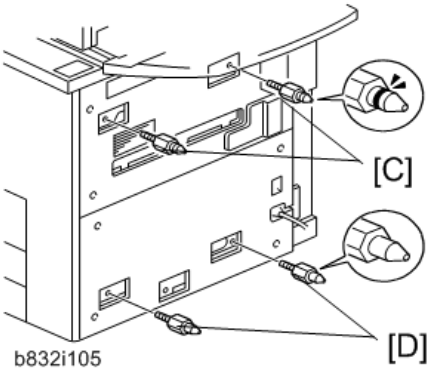

b832i105

1. Remove the covers [A] from the right upper side.
2. Remove the covers [B] from the right lower side.
3. Install the pins with the grooved rings [C] on the right upper cover.
4. Install the other pins [D] on the right lower cover.

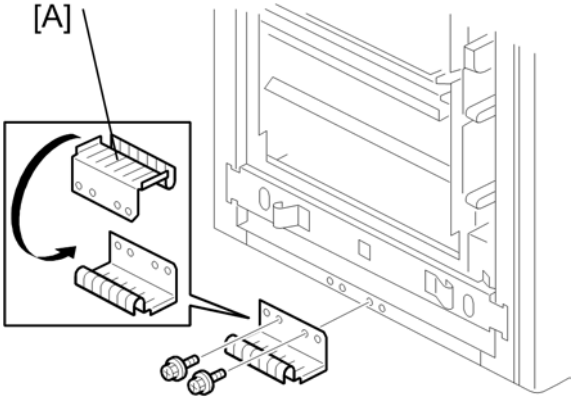

b832i106

5. Remove the lower stay [A] (x 4).
6. Remove the two screws that secure the ground plate [B].
7. Turn over the ground plate and use the screws to fasten it to the same holes as shown (x 2).

Important

- **If you are going to install the Multi Bypass Tray B833, it must be installed before the LCIT is docked to the mainframe.**

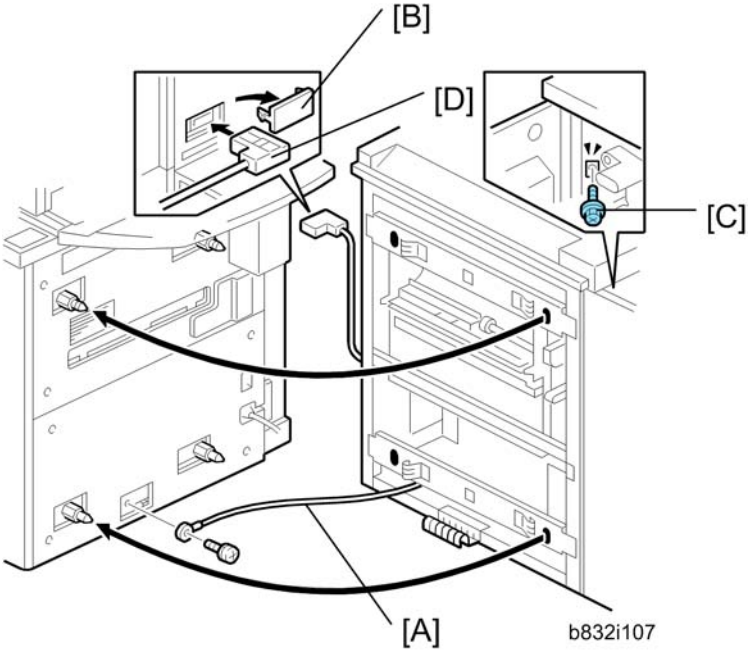

8. Move the LCIT to the right side of the main machine.
9. Fasten the ground wire [A] (x 1).
10. Remove cover [B].
11. Open the LCIT front door and remove screw [C] (x 1).
12. Align the LCIT on the joint pins, and dock the LCIT with the right side of the main machine.
13. Fasten screw [C] to lock the LCIT to the side of the main machine.
14. Attach connector [D].

Height Adjustment

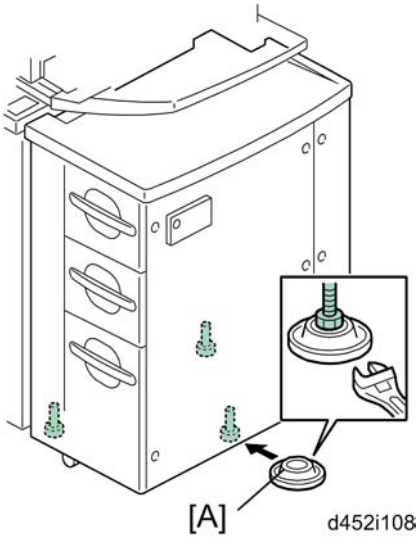

1. Set the leveling shoes [A].
2. Adjust the height of the unit and make sure that it is level.

Image Position Sensor, Paper Registration Adjustment

1. Calibrate the image position sensor.
2. Check side-to-side registration and adjust if necessary.

LCIT (D452) Tray Heaters

Accessories

Check the accessories against the list below.

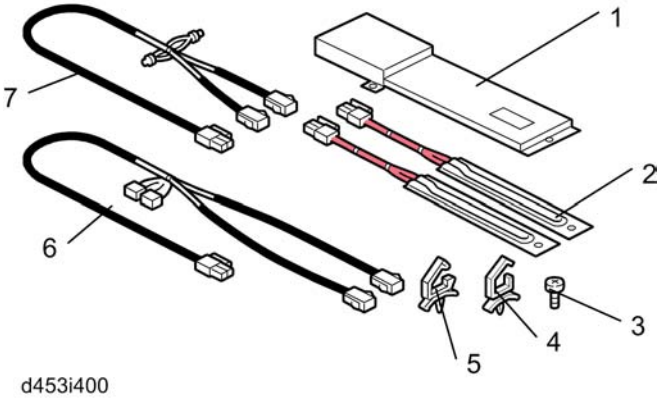

d453i400

No.	Description	Qty
1.	Cover Plate	1
2.	Heaters (230V 18W)	2
3.	Screws (M4x6)	7
4.	Harness Clamps (small)	2
5.	Harness Clamps (large)	2
6.	Relay Harness (long)	1
7.	Relay Harness (short)	1

Important

- The accessory kit contains the accessories for both the LCIT D452 and LCIT D453. Only the items shown below are required for the LCIT D452.

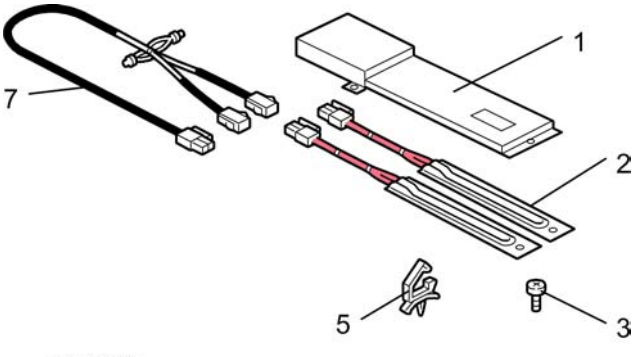

d453i400a

Installation

⚠CAUTION

- Make sure that the main machine is switched off and that its power cord is disconnected before doing the following procedure.

1. If the LCIT is already installed, disconnect the LCIT:
   - Lock bar (x1)
   - Interface cable
   - Ground wire (x1)

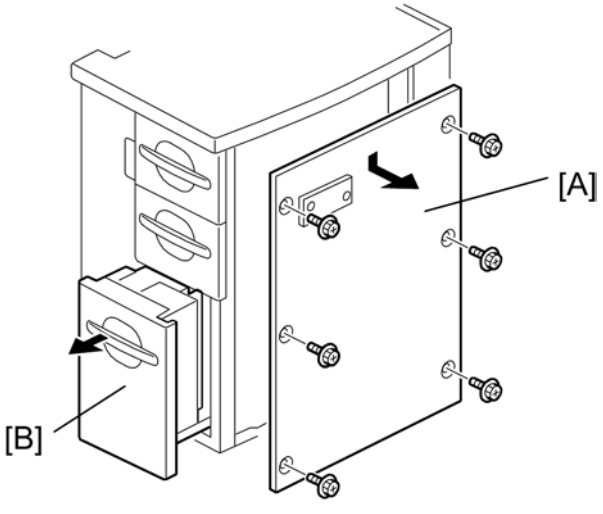

d452i121

2. Remove the right cover [A] (x6).
3. Open the bottom tray [B], remove all the paper, then pull out the tray completely.

Important

- **Do not remove either tray.**

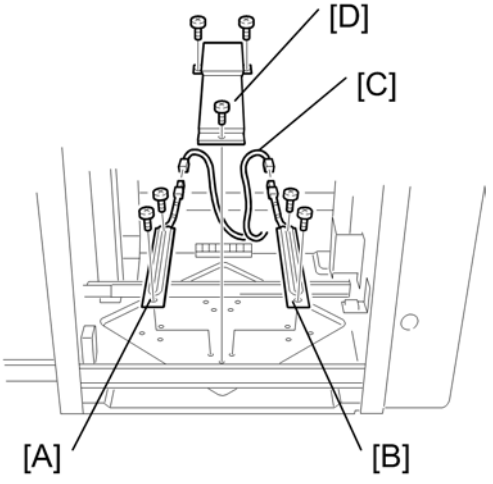

d452i122

4. Attach the front heater [A] (x2).
5. Attach the rear heater [B] (x2).
6. Pass the relay harness [C] through the right side of the LCIT and connect it to the heaters (x2).
7. Attach the cover plate [D] (x3).
8. Load paper in the bottom paper tray.
9. Push the bottom paper tray into the LCIT.
10. Reattach the right cover (x6).

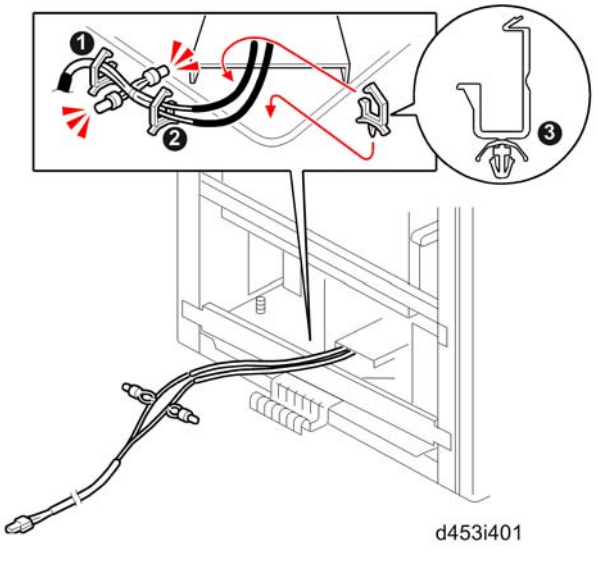

d453i401

11. Attach the three harness clamps.

Note

- Harness clamps ① and ② are already attached to the unit. Harness clamp ③ is provided with the accessory kit.

12. Set the harnesses in the clamps, then close them (x3).

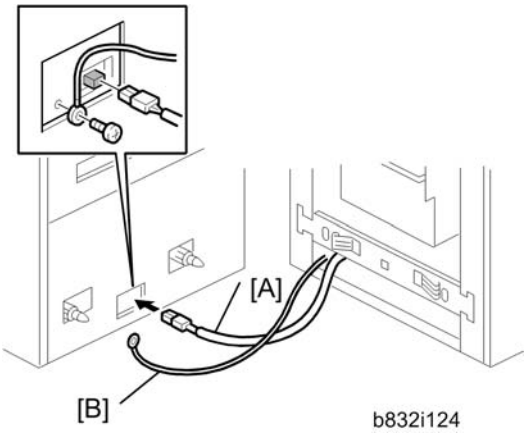

13. Attach the LCIT relay harness [A] to the mainframe.
14. Reconnect the ground wire [B] to the mainframe (x1).
15. Dock the LCIT to the mainframe.
    - Lock bar (x1)
    - Interface cable

Note

- Confirm that the relay harness and the ground wire are not pinched between the mainframe and the LCIT.

Multi Bypass Tray (B833)

Accessories

Check the quantity and condition of the accessories in the box against the following list.

	Description	Q'ty
1.	Tab Sheet Fence	1
2.	Sponge Strip	1
3.	Bracket	1
4.	Joint Pins	2
5.	Tapping Screws	3
6.	End Fence	1

Important

- **The Multi Bypass Unit must be installed on top of the LCT D532 before the LCT is docked to the mainframe.**
- **If the LCT is already installed, it must be disconnected from the mainframe before installation of the Multi Bypass Unit B833.**

Installation

The Multi Bypass Tray B833 can be installed on the LCIT RT5050 D532 only.

CAUTION

- Switch the machine off and unplug the machine before starting the following procedure. (page 58 "Correct Procedure to Turn Off the Power ")

Before Installing the Multi Bypass Tray:

If the LCT is connected to the machine, disconnect it.

To prevent damage to the connectors and ground wire, before pulling the LCIT away from the mainframe:

- Pull the LCIT about 20 cm (8") away from the mainframe.
- Disconnect the connectors and the ground wire (x 1)
- Pull the LCIT completely away from the machine.

Be sure to follow the correct tray installation procedure depending on which LCIT will be installed.

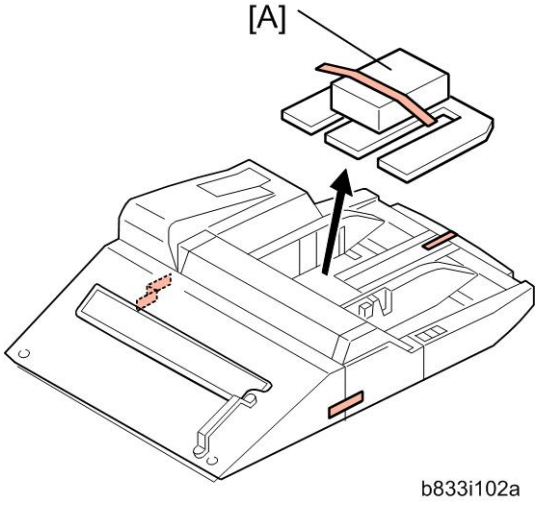

1. Remove the accessory packet [A].
2. Remove all other tape and shipping materials.

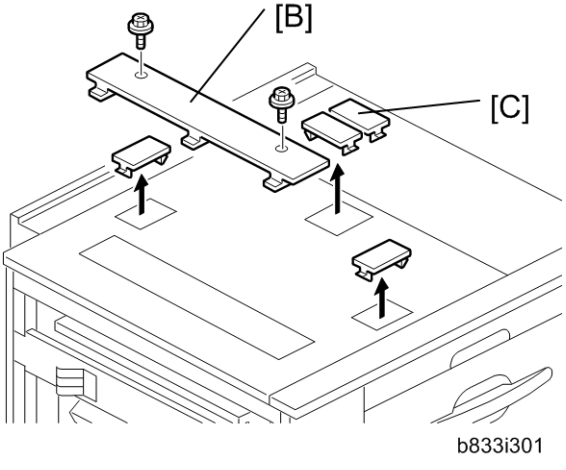

3. Remove the paper slot cover [B] (x 2) and discard the screws.
4. Use the edge of a fine tip flathead screwdriver to remove the smaller four covers [C].

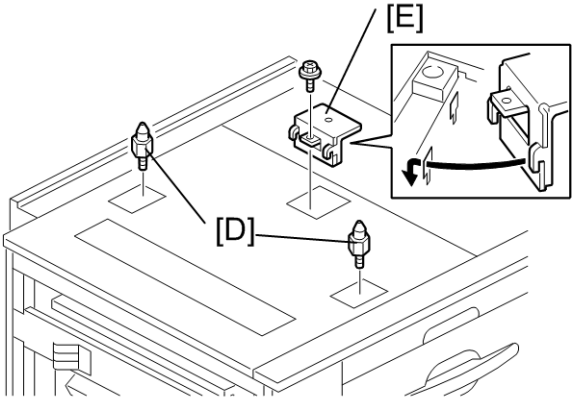

b833i302

5. Screw in the guide pins [D].
6. Attach the bracket [E] (x 1).

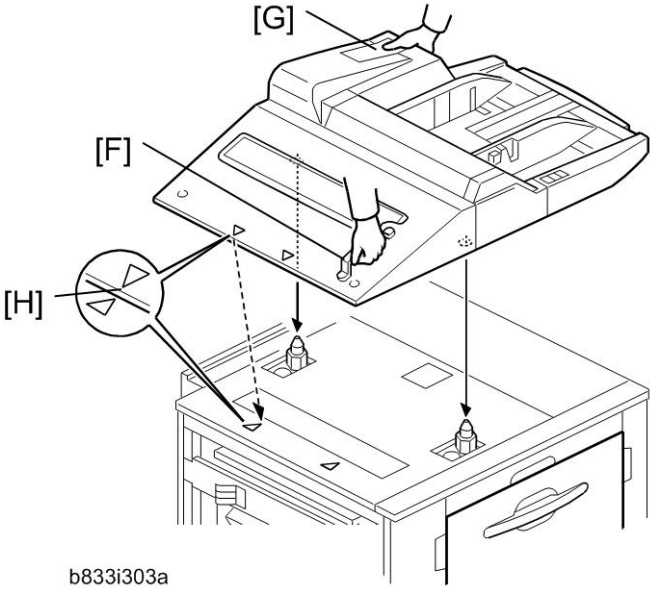

b833i303a

7. Grip the bypass tray unit handle [F]. Then place your hand under the corner [G] diagonal to the handle, then lift the unit and set it on top of the LCT.
8. Align the embossed arrows [H] on the top left cover of the bypass tray with the arrows on the LCT top.

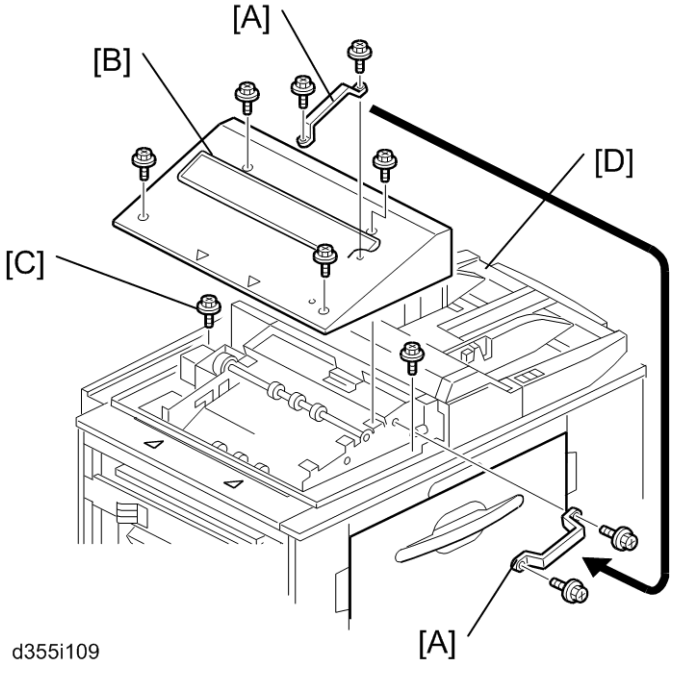

9. Remove the handle [A] (x 2). Keep these screws.
10. Remove the cover [B] (x 4).
11. Use the screws removed above to attach the handle [A] to the front frame.
12. Fasten the bypass tray rear frame [C] to the LCT (x 1).
13. Fasten the bypass tray front frame [D] to the LCT (x 1).

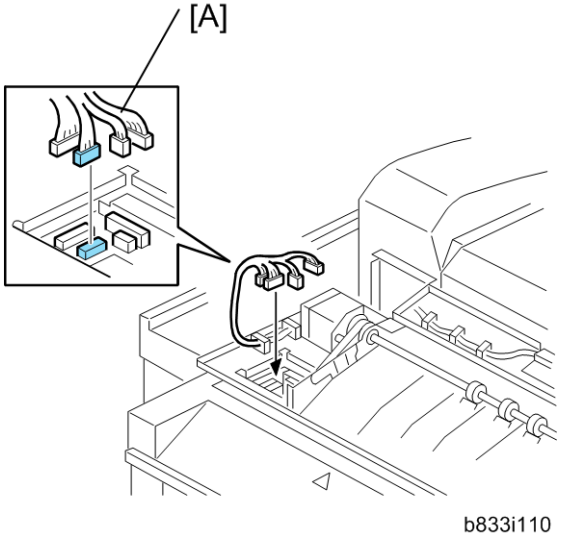

14. Connect the bypass tray harness [A] to the LCIT (x 4).

15. Re-attach the cover.
16. Attach the end fence (follow the instructions on the decal attached to the top of the bypass tray).

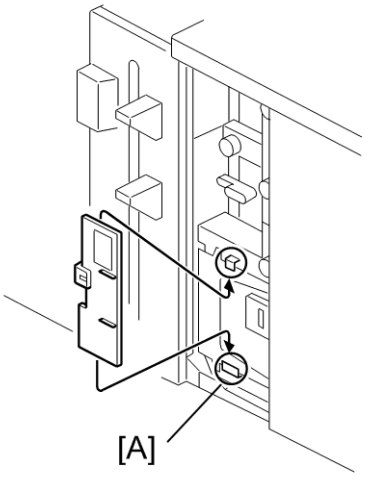

b512i009a

Note

- Open the LCT front door. Hang the tab sheet fence on the hooks [A] on top of the LCT tab fence. When feeding tab sheets from the bypass tray, follow the decal instructions on the tab fence to install the fence.

Cover Interposer Tray CI5010 (B835)

Accessories

Check the quantity and condition of the accessories in the box against the following list.

	Description	Q'ty
1.	Spacer	1
2.	Black Mylar	1
3.	Relay Guide Plate – Long (Not used)* see NOTE	1
4.	"L" Hinge Pins (Tray Unit Front Cover)	2
5.	Sponge Strip	1
6.	Leveling Shoes	4
7.	Front Docking Bracket	1
8.	Rear Docking Bracket	1
9.	Flat Knob Screw	1
10.	Screw (M4 x 8)	4
11.	Screw (M3 x 6)	2
12.	Screw (M4 x 12)	2
13.	Knob Screw	3
14.	Screws (M4 x 14) (Not used)	1
15.	Base Cover (Tray Unit)	1
16.	Relay Guide Plate – Short (Not used)* see NOTE	4
17.	Front Cover	1

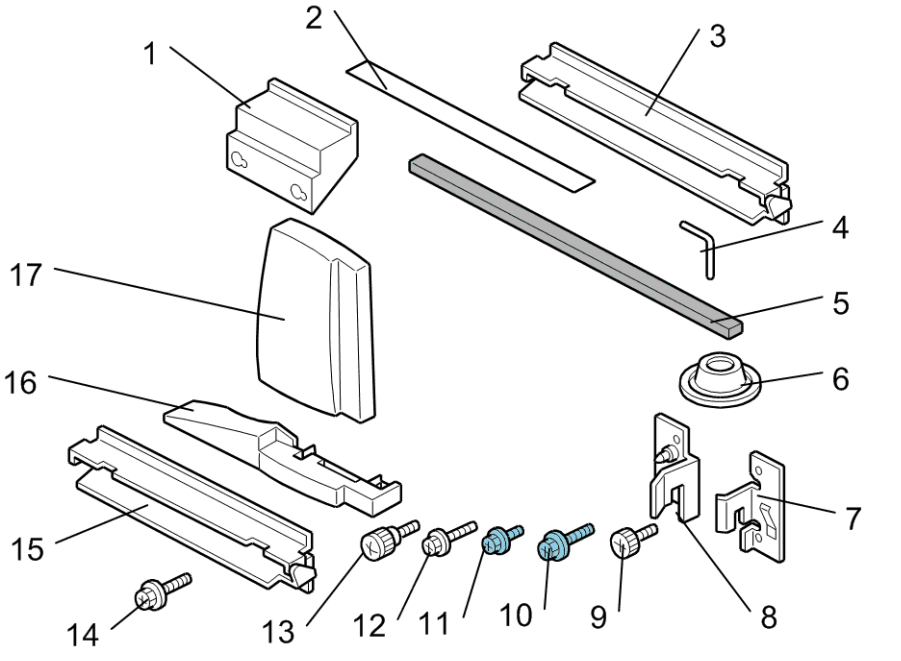

b835i101

Note

- The relay guide plates (No.3 and No.15) are not used for the model D095. Use the relay guide provided with the mainframe.

Installation

Setting up the Unit and Docking to the Mainframe

CAUTION

- Switch the machine off and unplug the machine before starting the following procedure. (page 58 "Correct Procedure to Turn Off the Power ")

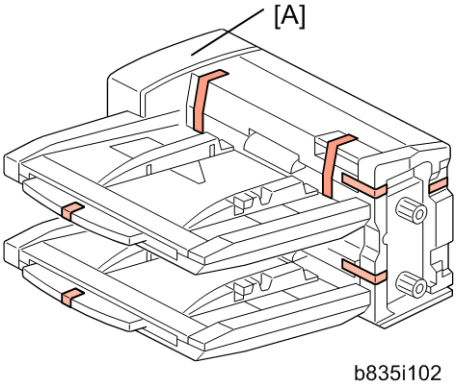

b835i102

1. Remove all the tape and shipping materials from the tray unit [A].

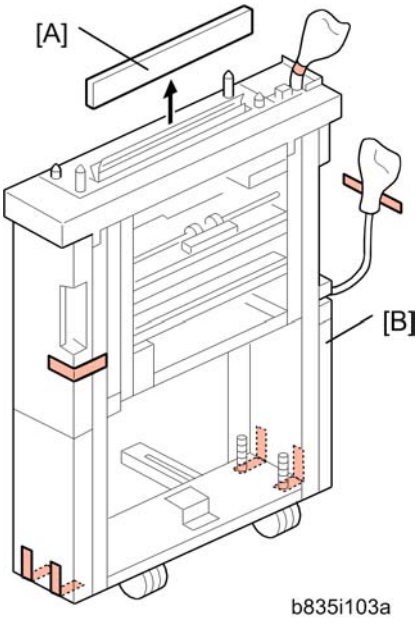

b835i103a

2. Remove cover [A].
3. Remove all tape and shipping materials from the transport unit [B].

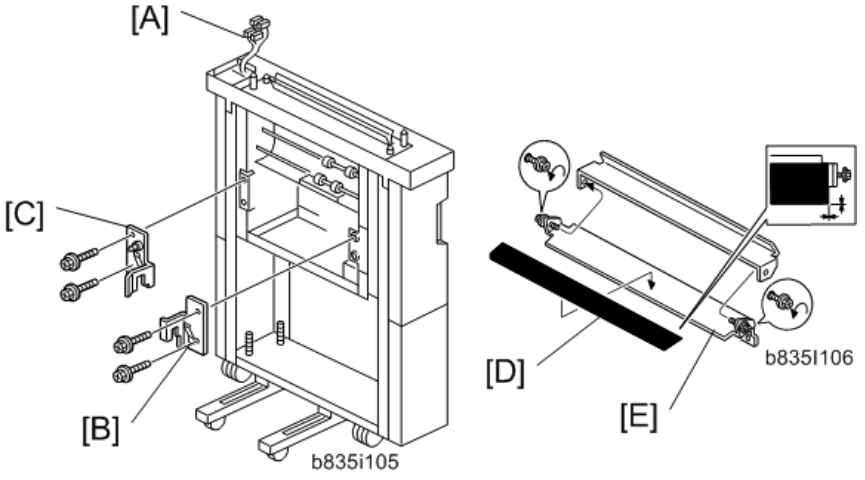

4. Confirm that the connectors [A] are free.
5. Attach the front docking plate [B] (x 2).
6. Attach the rear docking plate [C] (x 2).

Note

- These docking plates [B] [C] and screws are provided with the next device in the paper feed line.

7. Attach the black mylar [D] to the relay guide plate [E] of the next finishing device to be installed to the left of the cover interposer tray (Z-folding unit, booklet finisher, or finisher).

Important

- **Do not attach this mylar to either the long or short guide plates provided with the cover interposer tray accessories.**

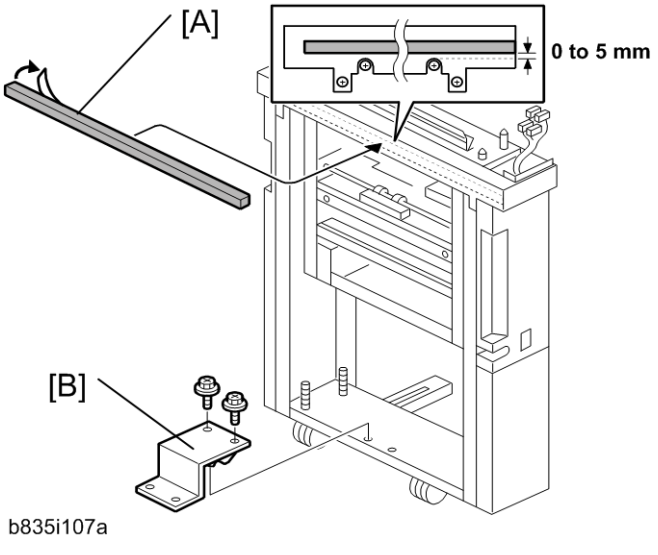

8. Peel the tape from the back of the sponge strip [A] and attach it as shown.
9. Remove the ground plate [B] from the bottom cross-piece (x 2: M3x6).

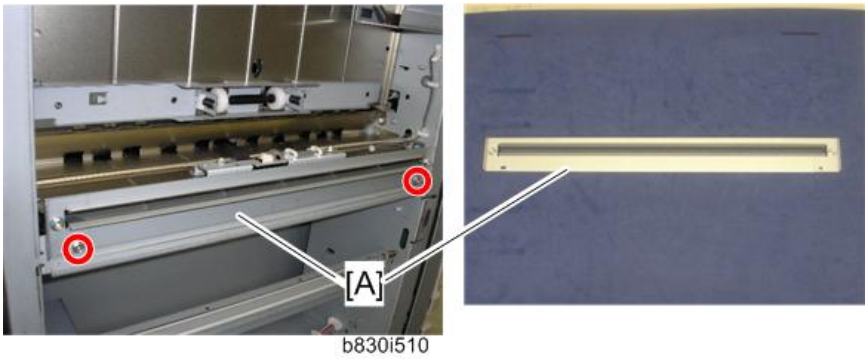

10. Attach the relay guide plate (marked "A") [A] (x2: M3x6).

Important

- **You must use the Relay Guide Plate (marked "A") which is provided with the mainframe (D095 or M077).**

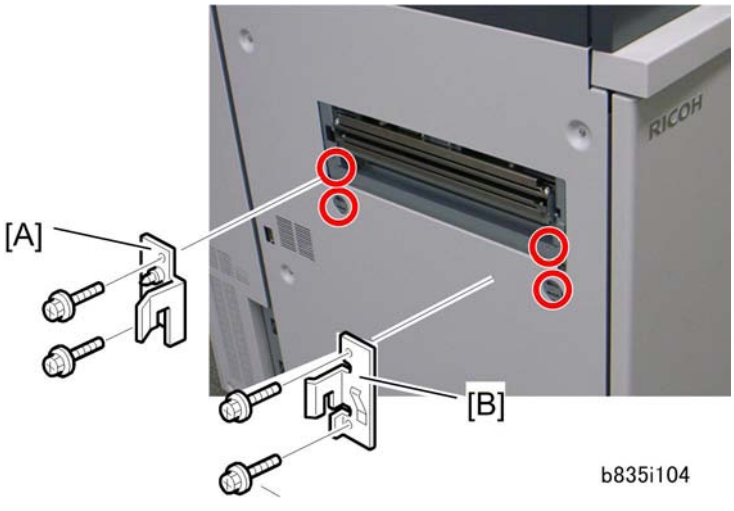

11. Attach the rear docking bracket [A] (x 2: M4x8 provided with the mainframe).
12. Attach the front docking bracket [B] (x 2: M4x8 provided with the mainframe).

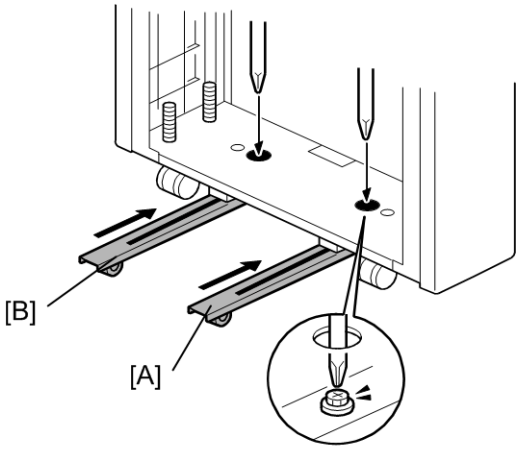

b835i109

13. If the Z-Folding Unit will be installed, loosen the screws for the rear runner [A] and front runner [B].
14. Push the runners in and re-fasten them again with the screws.

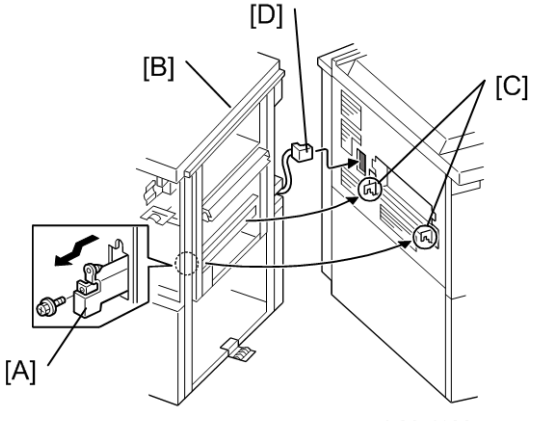

b835i108

15. Open the front door of the cover interposer tray.
16. Pull out the locking lever [A].
17. Align the finisher [B] with the joint brackets [C], then slowly push the finisher onto the brackets.
18. Connect the finisher cable [D] to the mainframe.
19. Push in the locking lever.
20. Check that the top edges of the finisher are parallel with edges of the finisher (or mainframe) to the right.
21. Fasten the locking lever [A] (x 1)
22. Close the front door.

Docking the Next Peripheral Device

The next peripheral device to the left of the cover interposer tray must be installed before you can mount the tray unit on top of the transport unit of the cover interposer tray.

- The tray unit of the cover interposer tray is supported by the top of the next peripheral device in line to the left, as well as the transport unit of the cover interposer.
- The next peripheral device to the left of the cover interposer must be set up and docked to the cover interposer before the transport unit of the cover interposer can be mounted.

Connect the next peripheral unit now.

- Z-Folding Unit B660 (See Z-Folding Unit ZF4000 (B660) in this chapter)3000-Sheet Finisher B830 (See Finisher SR5000 (B830) in this chapter)

⚠CAUTION

- Never attempt to mount the cover interposer tray unit until the next device in line (Z-Folding Unit B660, or 3000-Sheet Finisher (B830) has been docked to the transport unit (base) of the cover interposer tray.
- To prevent bending the frame of the tray unit and damaging its alignment, always remove the tray unit from the cover interposer tray transport unit at the following times:
- 1) Before disconnecting either the cover interposer tray or the next peripheral device to the left, or
- 2) Before doing any maintenance on either the cover interposer tray or the next peripheral device to the left.

Mounting the Tray Unit

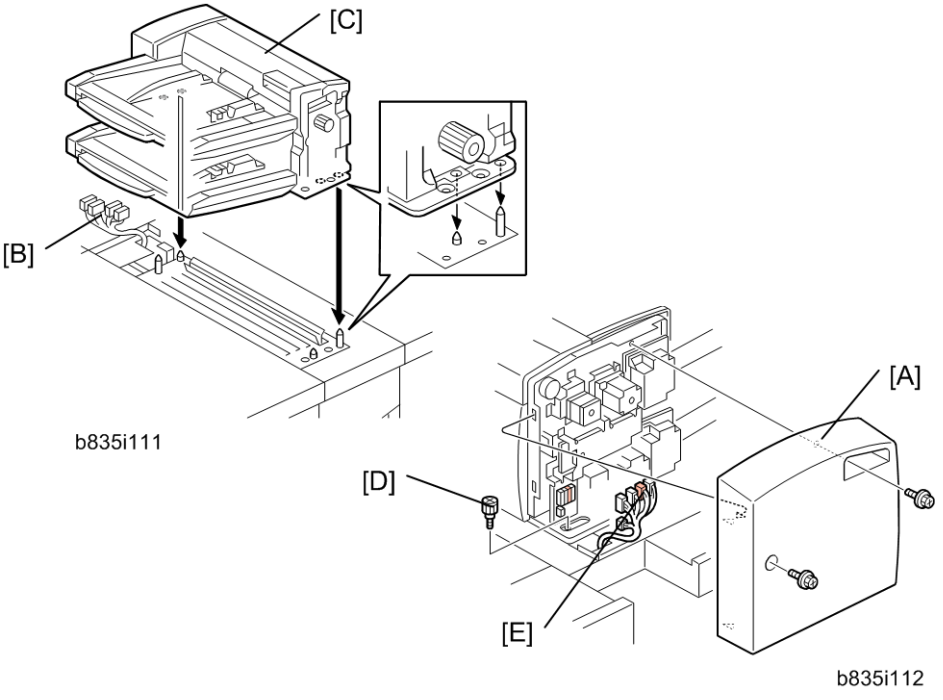

1. Remove the rear cover [A] (x 2).
2. Confirm that the connectors [B] are free.
3. Place the tray unit [C] on top of the cover interposer transport unit.
4. Attach the knob screw [D] (x 1).
5. Connect the harness connectors [E] (x 5)
6. Reattach the rear cover.

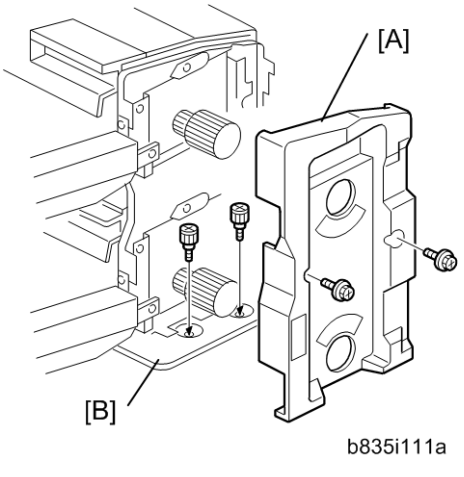

7. Remove the front inner cover [A] from the dual-tray unit (x 2).
8. Fasten the tray unit to the top of the transport unit with the knob screws [B] (x 2).

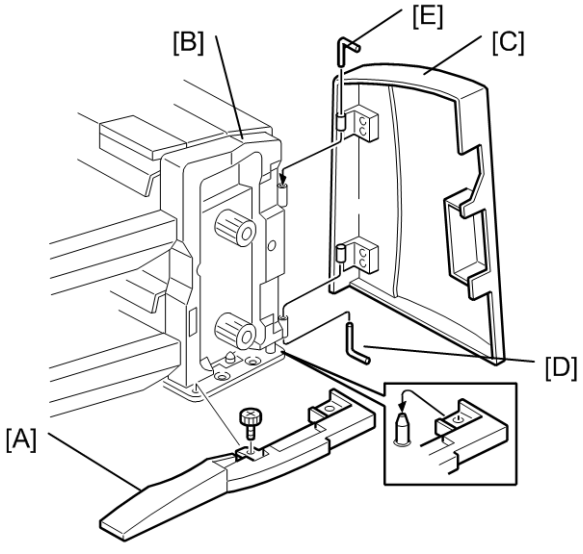

b835i113

9. Attach the base cover [A] (flat knob screw x 1).
10. Confirm that the holes in the cover match the positions of the reference pins.
11. Re-attach the front inner cover [B] (removed at step 7 above).
12. Position the tray unit front door [C] so that its hinges match the posts on the frame of the tray unit.
13. Hold the lower L-pin [D] as shown, insert it halfway, push it up, then rotate it into its groove.
14. Hold the upper L-pin [E] as shown, insert it halfway, push it down, then rotate it into its groove.

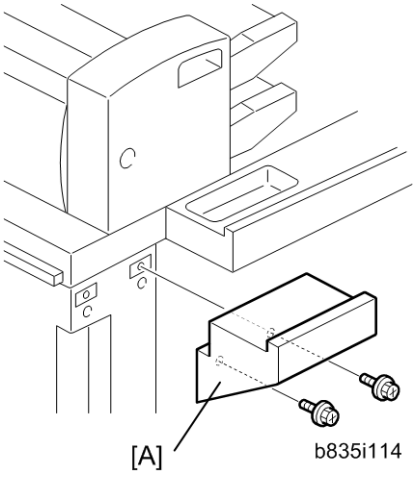

b835i114

15. Attach the spacer [A] to the rear of the transport unit (x 2: M4x12).

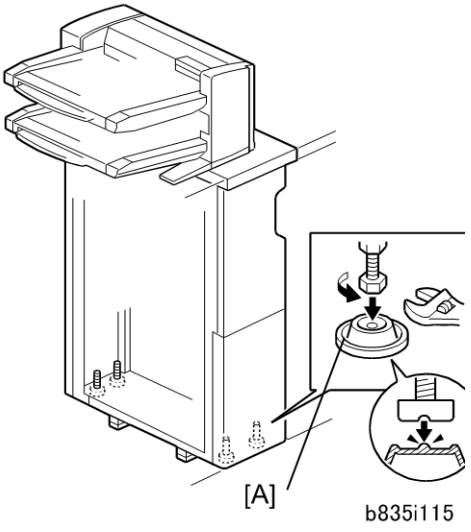

16. Set the leveling shoes [A] (x 4) under the feet.
17. Turn the nuts to adjust the height of the cover interposer until it is level.

Note

- If this peripheral is installed next to the main machine (D095 or M077), do the "Peripheral Height Adjustment" following this procedure.

Peripheral Height Adjustment

1. Turn on the main power switch.
2. Enter the SP mode, and then execute SP5-805-016.

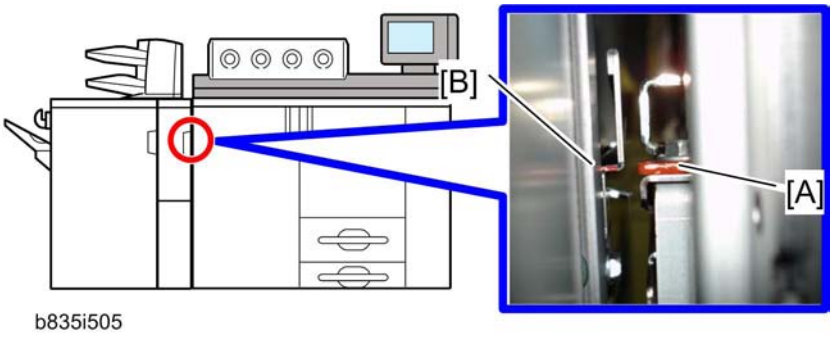

3. Check the paper exit guide plate [A] of the mainframe and relay guide plate [B] of the peripheral from the front side.
4. Remove the rear cover of the peripheral, and then check the paper exit guide plate of the mainframe and relay guide plate of the peripheral from the rear side.

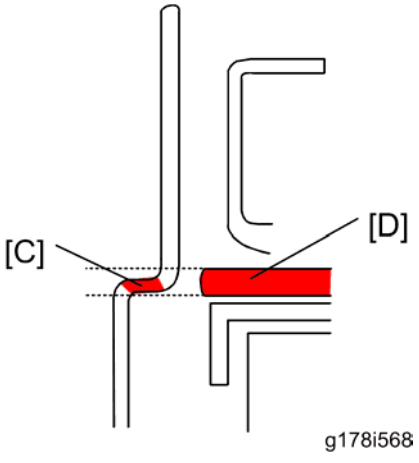

5. If the red areas [C] on the front and rear side edges of the peripheral's relay guide plate are level with the plate edge [D] on the mainframe, no adjustment is required. Otherwise, go to the next step.

Note

- The upper edge of the red area must not be above the top edge of plate edge [D], and the lower edge of the red area must not be below the bottom edge of plate edge [D])

6. Adjust the feet of the mainframe or peripheral so that the red areas at the front and rear [C] are level with the plate edge [D], as explained above.

Docking the Cover Interposer Tray B835

The following units are docked to the cover interposer tray:

- Z-Fold Unit B660
- Finisher B830

Z-Fold Unit B660 to Cover Interposer Tray B835

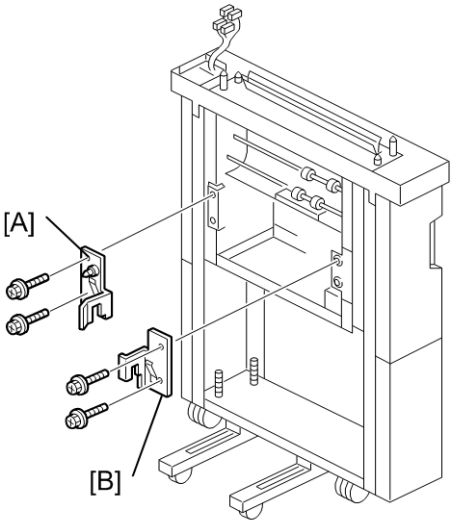

b660i202

1. Attach the rear docking bracket [A].
2. Attach the front docking bracket [B].

Note

- These docking plates [A] [B] and screws are provided with the next device for the next device installation in the paper feed line.

3. Connect the Z-folding unit.

Finisher B830 to Cover Interposer Tray B835

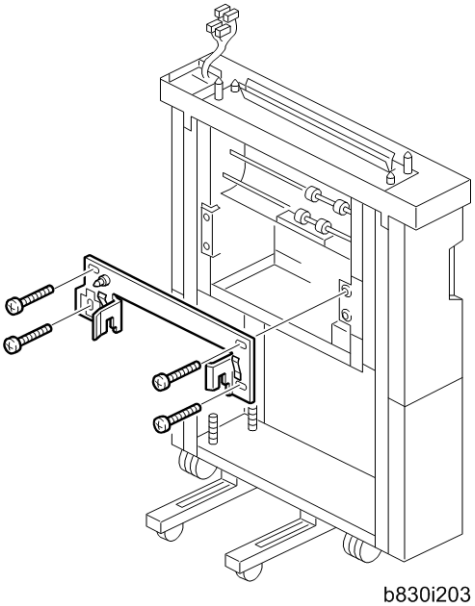

1. Fasten the joint bracket to the Cover Interposer Tray B835 (provided with B830) (x 4: provided with B830).
2. Dock the finisher.

Firmware Update

Install the latest version of the firmware for the cover interposer tray.

The cover interposer may not operate correctly with the mainframe unless the most recent version of the firmware is installed.

Z-Folding Unit ZF4000 (B660)

Note

- This unit cannot be installed in the same line as the High Capacity Stacker SK5010 (D447) if two stacker units are to be installed in the mainframe.

Accessory Check

Check the quantity and condition of the accessories in the box against the following list:

	Description	Qty
1.	Lock Bracket – Rear (Cover Interposer Tray)	1
2.	Lock Bracket – Rear	1
3.	Lock Bracket – Front (Cover Interposer Tray)*1	1
4.	Lock Bracket – Front	1
5.	Ground Plate (For Cover Interposer Tray)	1
6.	Ground Plate (For Z-folding unit)	1
7.	Ground Plate (For Finisher B830 or B836)	1
8.	Right Docking Bracket	1
9.	Left Docking Bracket	1
10.	Power Cord	1
11.	Front Spacer	1
12.	Rear Spacer	1
13.	Guide Plate	1
14.	Sponge Strip	1
15.	Teflon C-Clamp (Not used for this machine)	2
16.	Screws M4x10	4
17.	Screws M3 x 6	8
18.	Screws M4 x 8	4

	Description	Qty
19	Leveling Shoes	3
20.	Drive Gear (Not used for this machine)	1
21.	Drive Gear Assy (Not used for this machine)	1

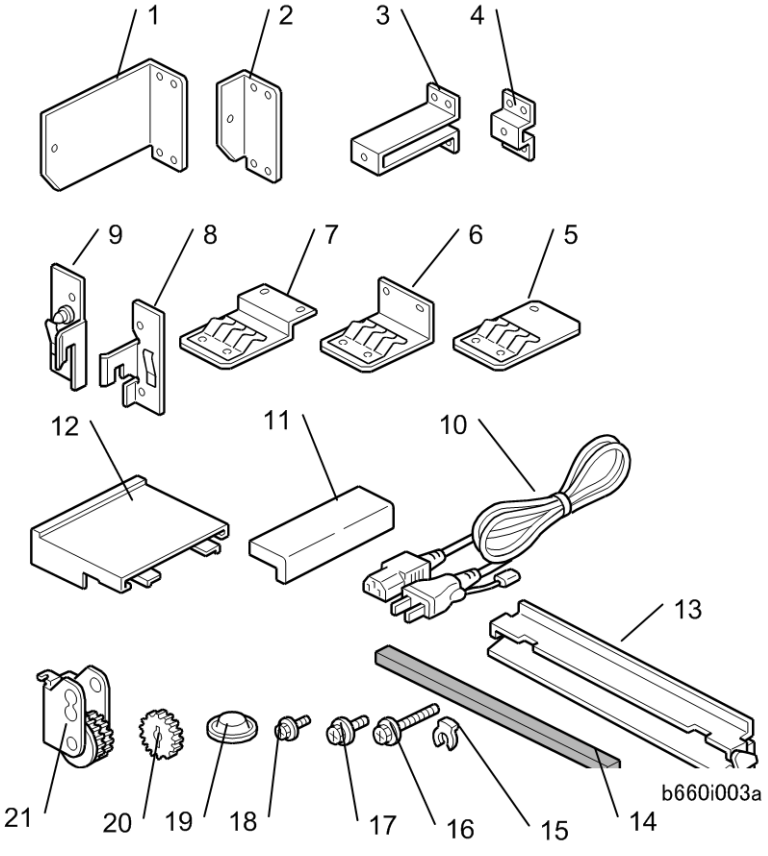

Installation

⚠ CAUTION

- Switch the machine off and unplug the machine before starting the following procedure. (☛ page 58 "Correct Procedure to Turn Off the Power ")

Unpacking

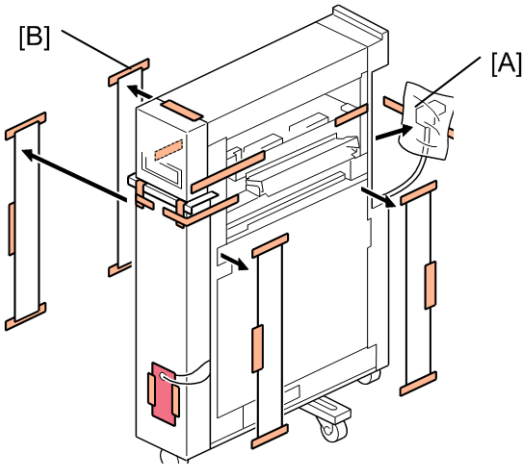

b660i001a

1. Detach the head of the I/F connector [A].
2. Remove all external tape [B] and shipping materials.

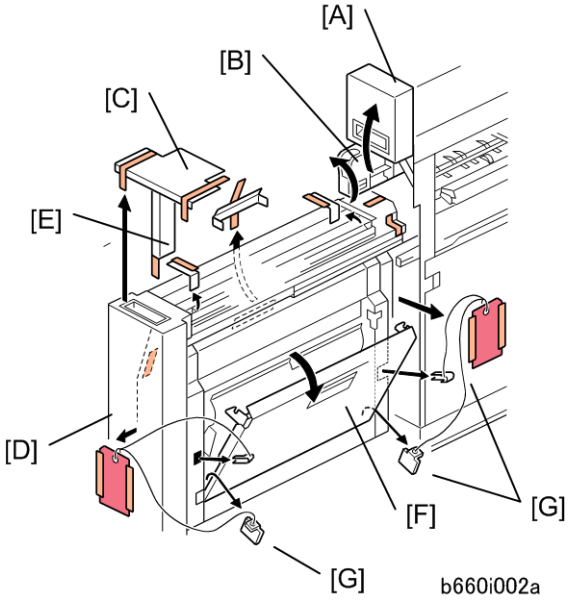

b660i002a

3. Open the front door [A].
4. Raise the horizontal transport plate [B] and remove the cushion [C].
5. Pull out the Z-folding mechanism [D] and remove the cushion [E].
6. Open the right vertical transport cover [F] completely (2 steps).
7. Remove four spacers [G] by pulling on the string.

Attaching the Brackets

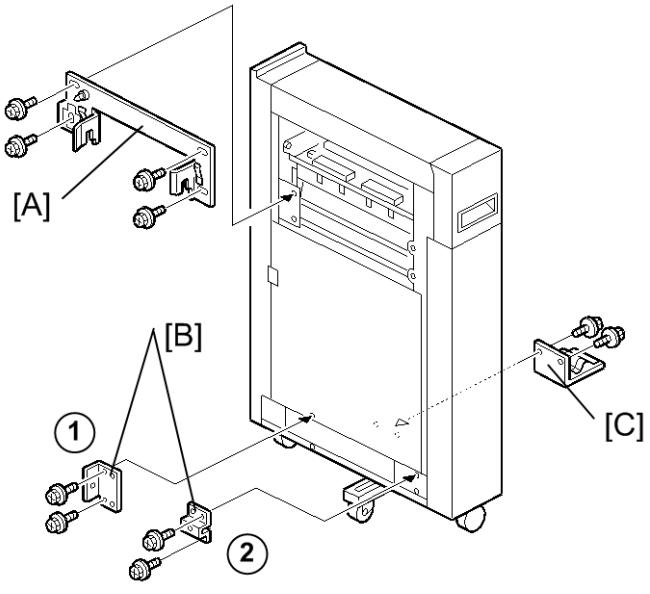

b660i004d

1. Attach the joint bracket [A] to the left of the Z-folding unit (use the joint bracket that is provided with the peripheral to be installed to the left side of the Z-folding unit) (x4: M4x10).

Note

- Use the long screws provided with the Z-fold unit accessories.

2. Attach the brackets [B] to the lower left corner of the Z-fold unit.
   - If a peripheral other than Booklet Finisher B836 is to be docked, attach one bracket ① (x2: M4x8 each).
   - If the Booklet Finisher B836 is to be docked to the Z-folding unit, attach both brackets ① and ② (x2: M4x8 each)
3. Attach the ground (earth) plate [C] to the side of the Z-folding unit if the Z-folding unit is to be installed next to the Cover Interposer Tray (B835), Perfect Binder (D391) or Buffer Pass Unit (M379) (x 2: M3x6).

Note

- Set the ground plate so that there is no gap between the plate and the bottom frame of the finisher (as shown).

Preparing for Docking

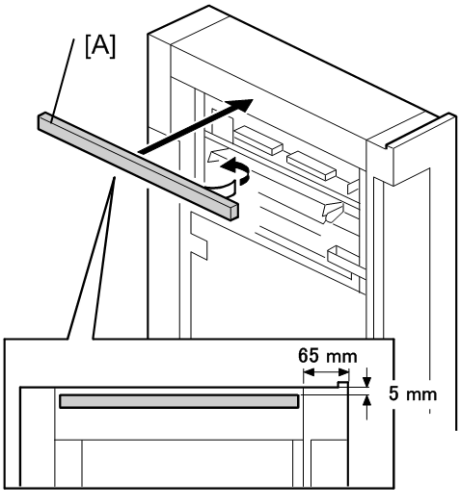

b660i005

1. Remove the tape from the sponge [A] and attach it to the Z-folding unit.

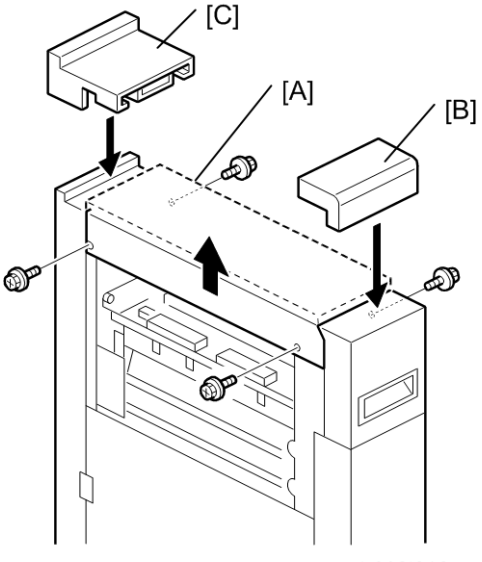

b660i010

2. Remove the top cover [A] (x 4).
3. Remove the seal from the double-sided tape on the bottom of the front spacer [B], then attach it.
4. Remove the seal from the double-sided tape on the bottom of the rear spacer [C], then attach it.
5. The spacers align the top of the Z-folding unit with the edge of the mainframe.
6. Reattach the top cover [A] (x 4).
7. Make sure that the top cover is level with the tops of the rear and front spacers.

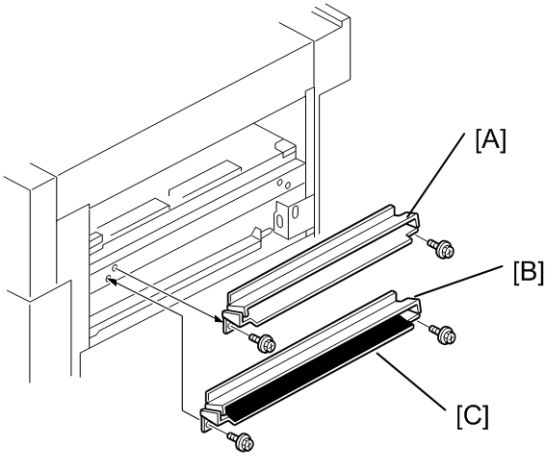

b660i003b

Important

- **Do Steps 8 and 9 only when the Z-Folding Unit (B660) is installed with Cover Interposer Tray (B835).**

8. Replace the entrance guide plate [A] with the longer guide plate [B] provided with the accessories (x 2) if this option is to be installed next to another finishing option.

Note

- If this peripheral is to be installed next to the mainframe (D095 or M077), use the relay guide plate (marked "A") provided with the mainframe (D095/M077). For details, see the procedure below.

9. Attach the mylar [C] (from the accessories for the Cover Interposer B835) as shown in the illustration only to the guide plate provided with the Cover Interposer Tray B835.

If this option is to be installed next to the mainframe (D095 or M077):

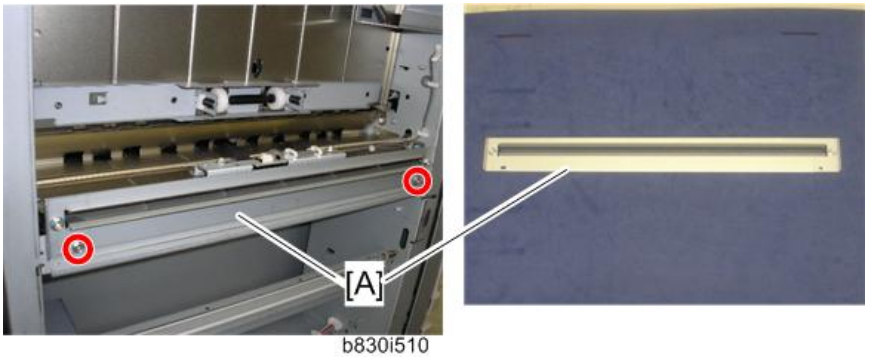

b830i510

- Attach the relay guide plate [A] (marked "A" provided with the D095 or M077) (x 2: removed in the previous step)

Testing the Breaker

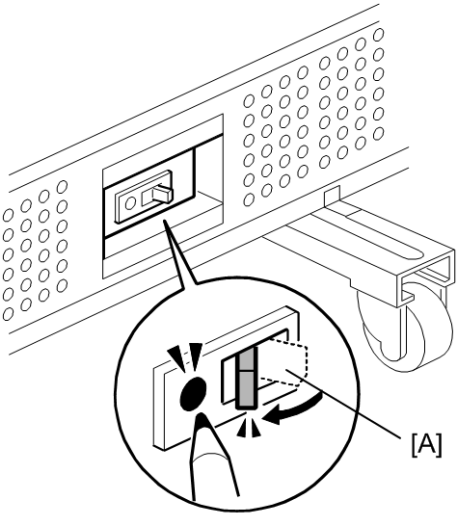

b660i003c

1. The breaker switch is at the lower right side of the Z-folder. Confirm that the manual breaker switch [A] is set to the right.

   Note

   - When the breaker switch is set to the right (the "—" mark will be visible), the mainframe is ready to be turned on.

2. Connect the Z-folding unit power cord to the Z-folding unit and connect the other end of the cord to an ac power source.
3. Push in the breaker test button with the tip of a screw driver until the breaker switch snaps to the off position.
4. Confirm that the breaker switch is at the off position.
   - If the breaker switch does not move to the off position:
   - Confirm that the power cord is securely connected to the power supply.
   - Push the test button again.
   - If the breaker switch does not snap to the off position, the breaker switch must be replaced.
5. Reset the breaker switch to the on position.

Docking the Z-Folding Unit to the Cover Interposer Tray or Mainframe

The Z-Folding Unit is docked to the Cover Interposer Tray B835, or to the Mainframe if the cover interposer tray is not used.

Z-Fold Unit to Cover Interposer Tray B835

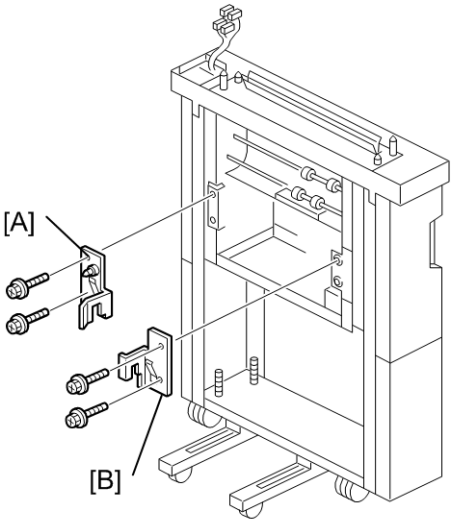

b660i202

1. Attach the rear docking bracket [A].
2. Attach the front docking bracket [B].
3. Connect the Z-folding unit.

Z-Fold B660 to Mainframe

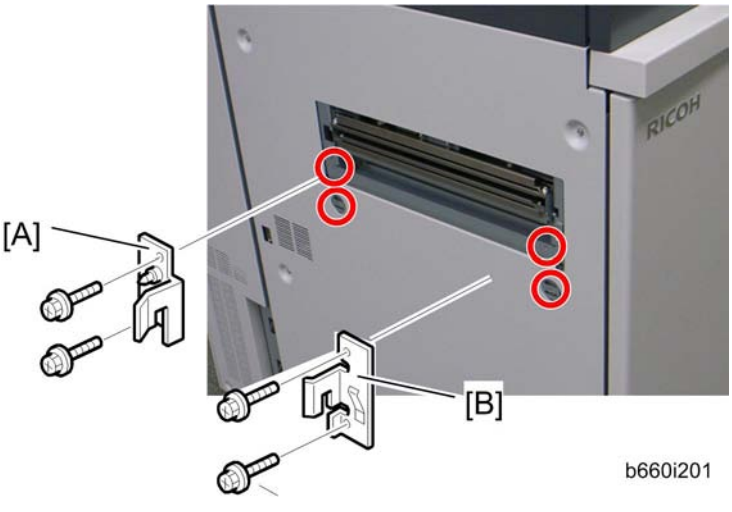

b660i201

1. Attach the rear docking bracket [A] (x 2: M4x8 provided with the mainframe).
2. Attach the front docking bracket [B] (x 2: M4x8 provided with the mainframe).
3. Connect the Z-folding unit.
4. Turn on the main power switch.

5. Enter the SP mode, and then execute SP5-805-016.

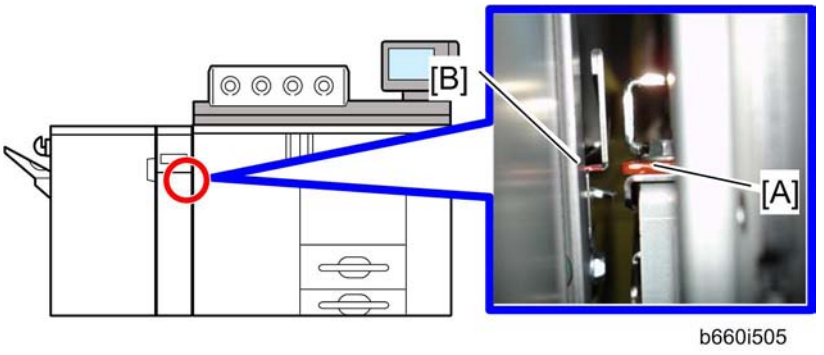

6. Check the paper exit guide plate [A] of the mainframe and relay guide plate [B] of the peripheral from the front side.
7. Remove the rear cover of the peripheral, and then check the paper exit guide plate of the mainframe and relay guide plate of the peripheral from the rear side.

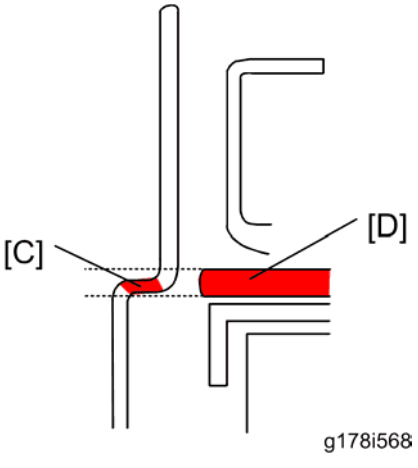

8. If the red areas [C] on the front and rear side edges of the peripheral's relay guide plate are level with the plate edge [D] on the decurler unit, no adjustment is required. Otherwise, go to the next step.

Note

- The upper edge of the red area must not be above the top edge of plate edge [D], and the lower edge of the red area must not be below the bottom edge of plate edge [D])

9. Adjust the feet of the mainframe or peripheral so that the red areas at the front and rear [C] are level with the plate edge [D], as explained above.

Connecting the Z-Folding Unit B660

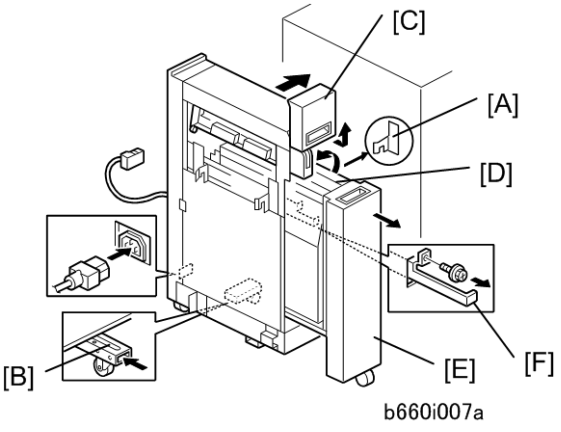

1. Fasten brackets [A] (x2) (provided accessories) to the Cover Interposer Tray B835, Perfect Binder D391, Buffer Pass Unit M379 or Mainframe (x 2 each).
2. Remove support screw and bracket [B], push in the support, then reattach the screw and bracket.
3. Pull the top cover [C] toward you then raise it.
4. Raise the horizontal transport plate [D] to the left.
5. Pull out the Z-folding mechanism [E].
6. Pull out the Z-folding unit lock lever [F] (x 1).
7. At the right bottom edge of the Z-folding unit, confirm that the breaker switch is ON.

   Note

   - This switch should display "—". If you see "O", set the switch to "—". The machine will not recognize the Z-folding unit if this switch is off.
8. Dock the Z-folding unit to the Cover Interposer Tray B835, Perfect Binder D391, Buffer Pass Unit M379 or Mainframe.
9. Push in the lock lever [F] and fasten it (x 1).
10. Push in the Z-folding mechanism [E], lower the horizontal transport plate [D], then close the front door [C].
11. Connect the Z-Folding unit to the mainframe.
12. Connect the Z-Folding unit power cord to the Z-folding unit and connect the other end of the cord to the power ac supply.

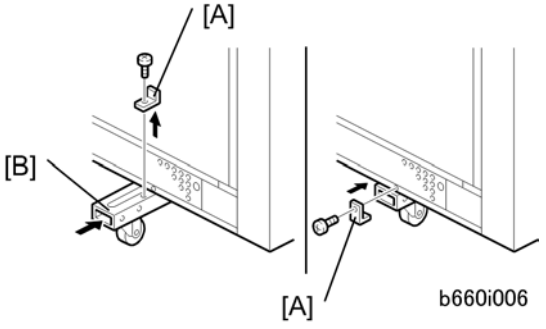

13. At the left bottom edge of the Z-folding unit, remove the bracket [A] (x 1).
14. Push in the support [B].
15. Reattach the bracket [A] (x 1).

CAUTION

- With the support retracted, the Z-folding unit tips easily!

16. Attach the I/F cable to the Cover Interposer Tray B835, Perfect Binder D391, Buffer Pass Unit M379 or Mainframe.
17. Connect the power cord to the Z-folding unit.

Connecting the Peripheral to the Z-Folding Unit B660

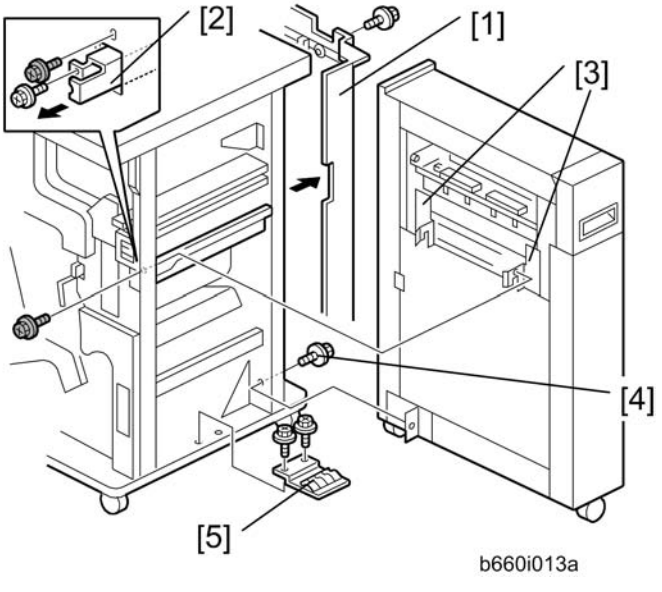

1. Remove the rear cover [1] of the peripheral.
2. Attach the ground plate [5] (No.7 in the accessories of this unit) to the peripheral (x 2: M3x6).

3. Open the front door of the finisher.
4. Pull out the locking lever [2] (x 1).
5. Align the finisher with the joint brackets [3], then slowly push the finisher onto the brackets.
6. Connect the finisher cable to the Z-Folding Unit.
7. Push in the locking lever.
8. Check that the top edges of the finisher are parallel with edges of the Z-Folding Unit.
9. Fasten the locking lever [2] (x 1)
10. Fasten the screw [4].
11. Reattach the rear cover of the finisher
12. Close the front door.

Booklet Finisher SR5020 (D434)

Accessories

Check the quantity and condition of the accessories in the box against the following illustration and list.

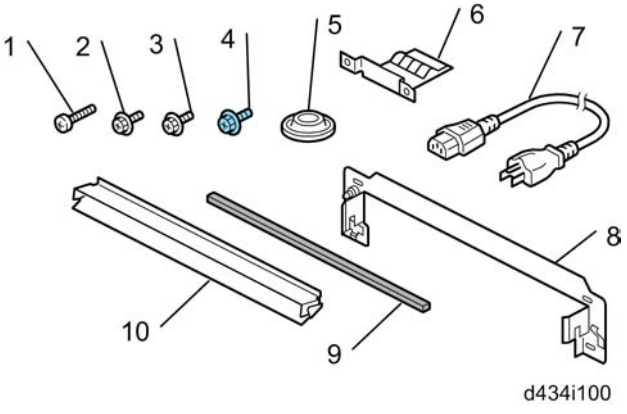

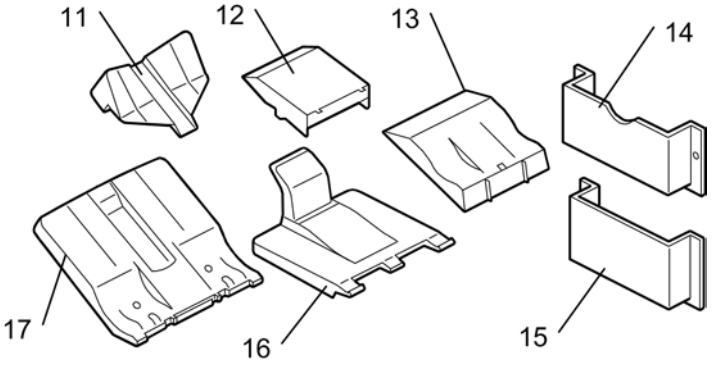

No.	Description	Q'ty
1.	Screws M4x14 (Joint Bracket)	4
2.	Screws M3x8 (Shift Tray)	4
3.	Screws M3x6 (Ground Plate)	2
4.	Screws M3x6 (Paper Guide)	2
5.	Leveling Shoes	4

No.	Description	Q'ty
6.	Ground Plate	1
7.	Power Cord*1	1
8.	Joint Bracket	1
9.	Sponge Strip	1
10.	Paper Guide	1
11.	Auxiliary Tray – Glossy Paper	1
12.	Auxiliary Tray – Z-Fold Paper	1
13.	Auxiliary Tray – Coated Thin Paper	1
14.	Auxiliary Tray Holder – Glossy Paper and Coated Thin Paper	1
15.	Auxiliary Tray Holder – Z-Fold Paper	1
16.	Booklet Tray	1
17.	Shift Tray	1

Installation

⚠CAUTION

- Make sure that the main machine is switched off and that its power cord is disconnected before doing the following procedure. (☛page 58 "Correct Procedure to Turn Off the Power ")

Tapes, Retainers, Shipping Plates

Important

- **The shipping plates prevent the staple unit from moving during transport. The plates should be kept and re-attached before the unit is transported to another location.**

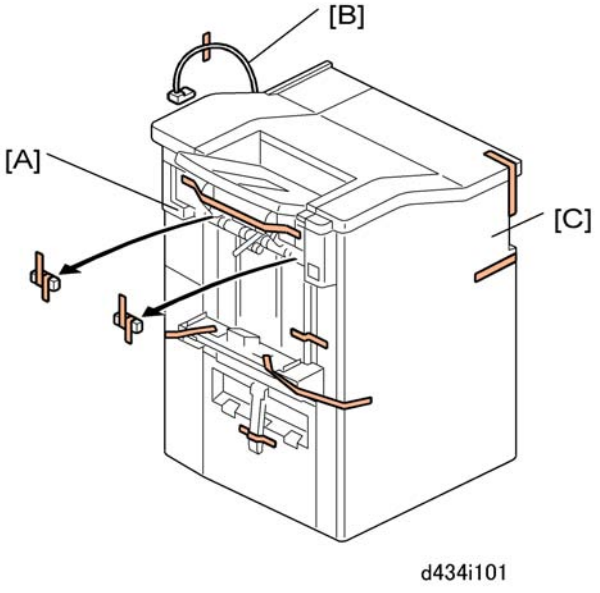

1. Remove tapes:

   [A] Left

   [B] Rear

   [C] Front

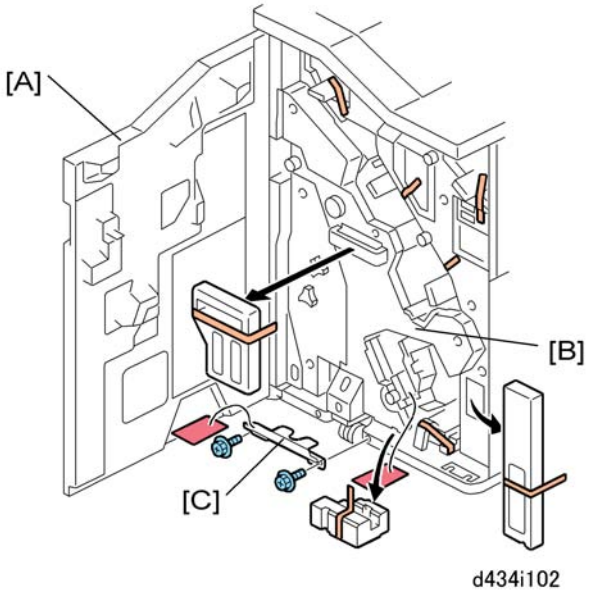

2. Open the front door [A].
3. Remove:

[B] Tapes, retainers inside

[C] Tag, wire, shipping plate (x2)

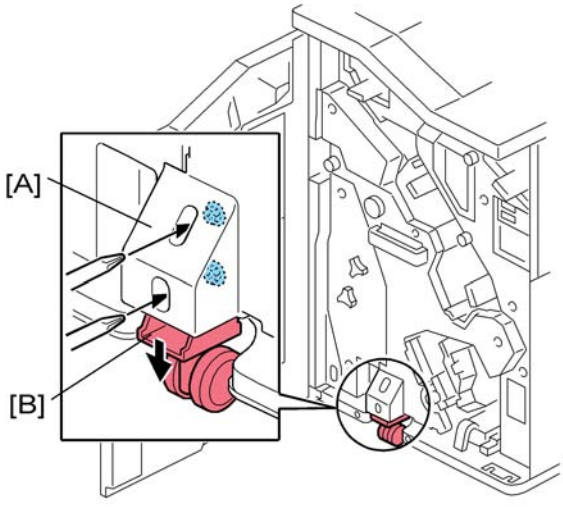

d434i102a

4. Loosen the screws of the caster cover [A] (x2).
5. Push the caster [B] down until it touches the floor.
6. With the caster touching the floor, tighten the caster cover screws.

CAUTION

- This prevents the unit from tipping over when you pull out the staple unit.

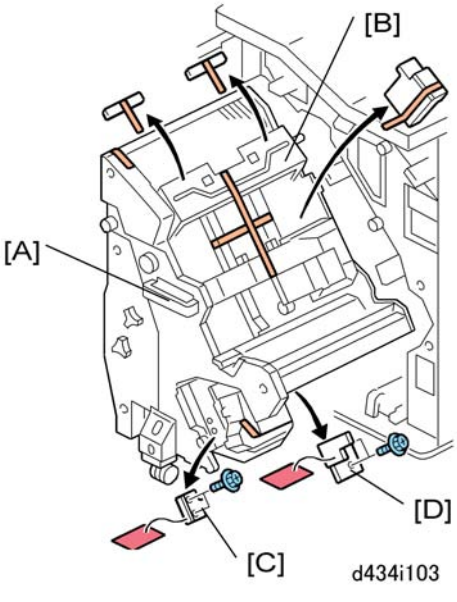

d434i103

7. Grip handle [A] and slowly pull the staple unit out until it stops.
8. Remove:

   [B] All tapes, retainers

   [C] Tag, wire, shipping plate (x2)

   [D] Tag, wire, shipping plate (x2)

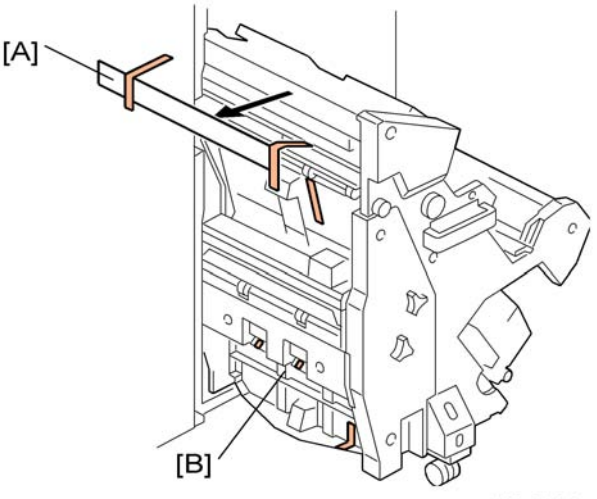

d434i104

9. Remove:

   [A] Tapes, retainer

   [B] Tapes

Ground Plate, Sponge Strip

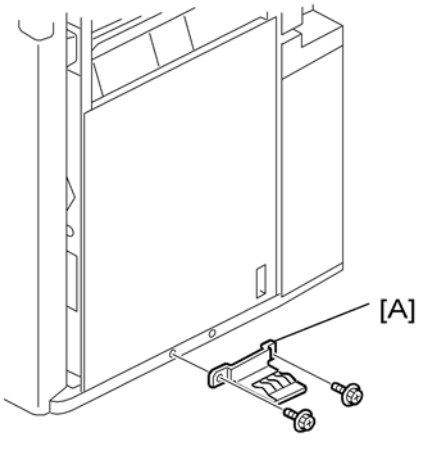

d434i106

1. Attach the ground plate [A] to the bottom right edge of the unit (x2).
   - For installing to the mainframe (D095 or M077), **do not attach** the ground plate [A].

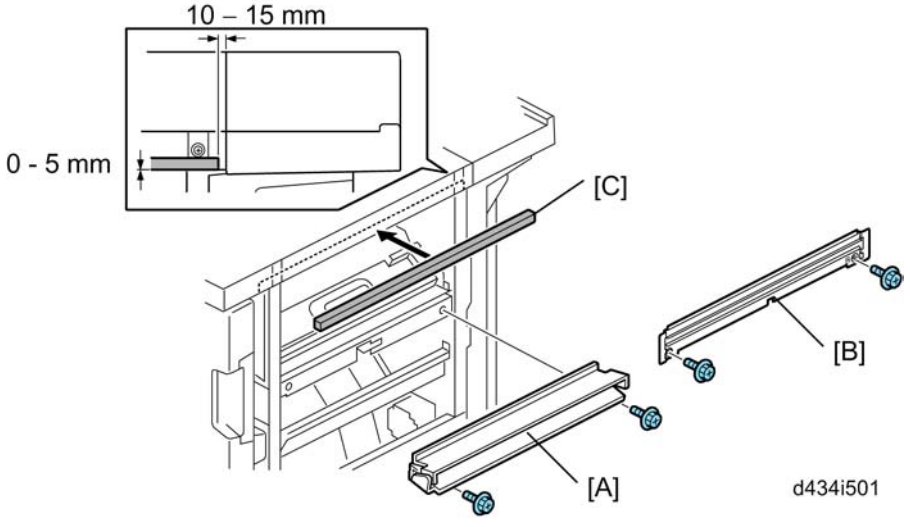

2. Attach the paper guide to the right side of the unit (x2).
   - For installing on upstream peripherals other than the mainframe (D095 or M077), use the paper guide [A] in the accessories of this unit.

Important

- **If the upstream peripheral device is the Cover Interposer Tray (B835) or the Decurl Unit DU5000 (D457), attach the black mylar provided with the cover interposer tray or decurl unit to this paper guide.**
- For installing on the mainframe (D095 or M077), use the paper guide [B] (marked "B") provided with the mainframe (D095 or M077).

3. Remove the tape from the sponge strip [C] and attach the strip to the top right edge of the unit.

Booklet Tray, Shift Tray

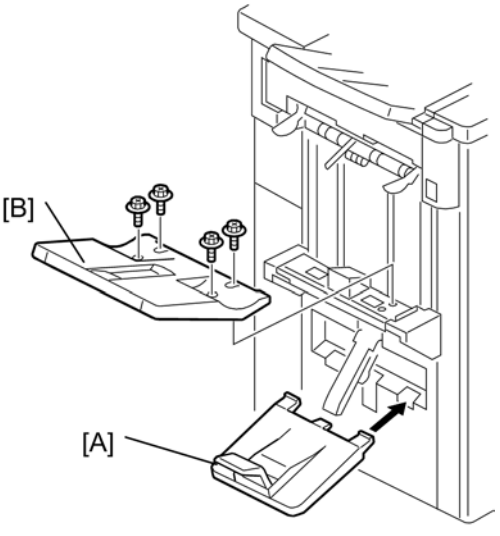

d434i107

1. Attach the booklet tray [A] to the notch in the left cover (no screws).
2. Attach the shift tray [B] to the left side of the unit (x4 M3x8).

Docking

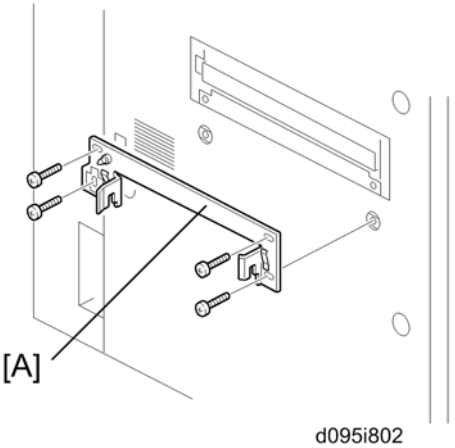

d095i802

1. Fasten the joint bracket [A] to the mainframe (D095 or M077) (x 4; M4x8 provided with the mainframe).
   - Use the screws (x 4; M4x14) to fasten the joint bracket to other peripherals.
   - See the installation procedure for the upstream unit for information about which joint bracket is to be used.

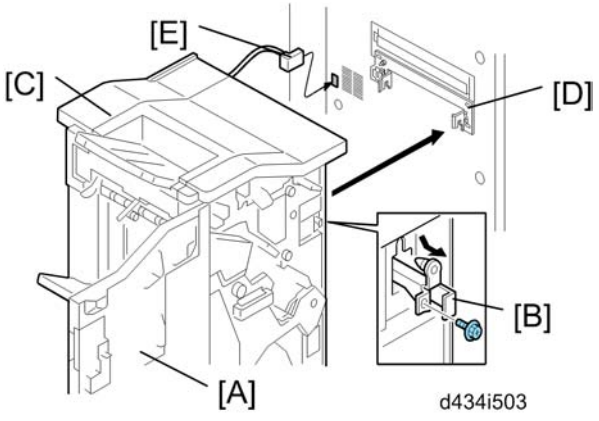

2. Open the front door [A] of the unit.
3. At the front right corner, remove the screw of the lock bar [B] (x1 M3x6). **Keep this screw.**
4. Pull the lock bar toward you until it stops.
5. Slowly push the unit [C] against the left side of the upstream unit (or main machine) so that the lock bar is directly and squarely under the arms of the joint bracket [D].
6. Push the lock bar in completely so that it slides up into the notches in the arms on both ends of the joint bracket.
7. Fasten the lock bar by re-attaching the screw removed in **Step 3** (x1).
8. Attach the I/F cable [E] to the upstream unit.

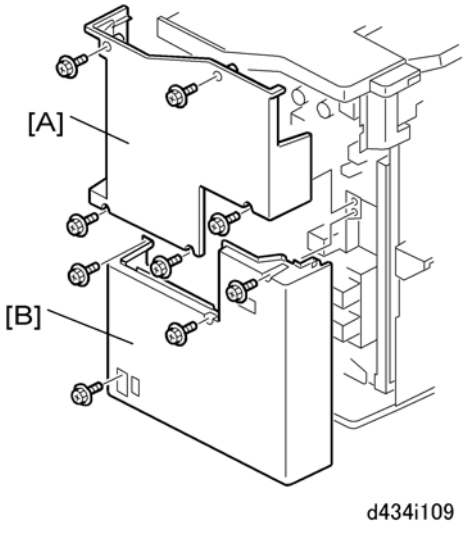

9. Remove:

   [A] Rear upper cover (x5)

   [B] Rear lower cover (x4)

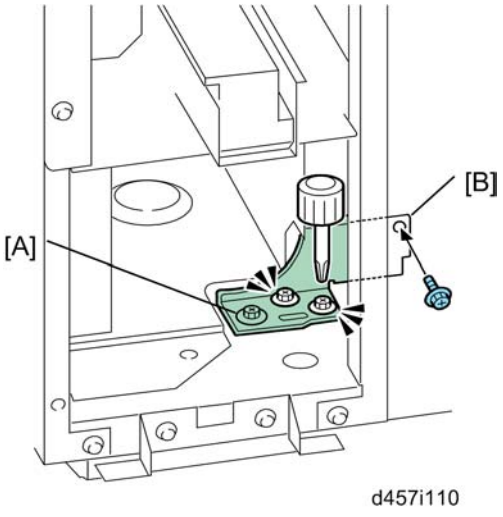

10. Use a short screwdriver to loosen bracket [A] (x3).
11. Fasten the bracket to the upstream unit at [B] (x1).
12. Tighten the screws (x3).
13. Re-attach the rear covers.

Height Adjustment

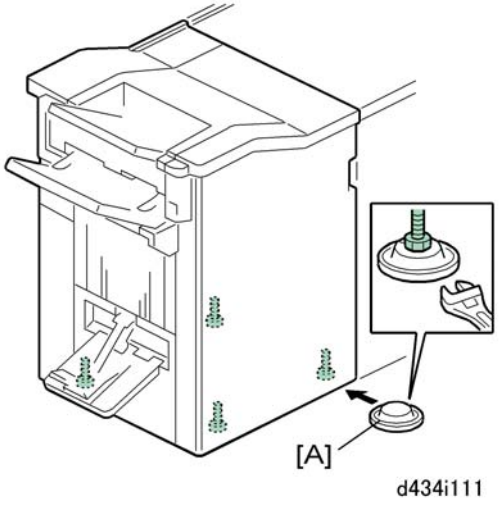

1. Set the leveling shoes [A].
2. Adjust the height of the unit and make sure that it is level.

   If this unit is to be installed to the left of the mainframe (D095 or M07), the following adjustment procedure is required. If not, go to the next section "Power Cord, Breaker Switch Test".

3. Turn on the main power switch.
4. Enter the SP mode, and then execute SP5-805-016.

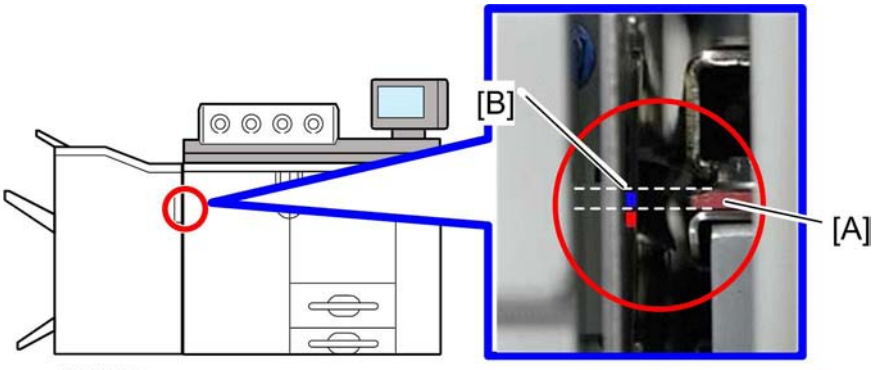

d434i504

5. Check the paper exit guide plate [A] of the mainframe and relay guide plate [B] of the peripheral from the front side.
6. Remove the rear cover of the peripheral, and then check the paper exit guide plate of the mainframe and relay guide plate of the peripheral from the rear side.

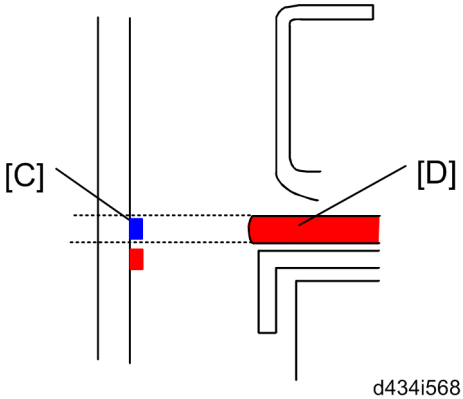

d434i568

7. If the blue marks [C] on the front and rear side edges of the peripheral's relay guide plate are level with the plate edge [D] on the mainframe unit, no adjustment is required. Otherwise, go to the next section "Power Cord, Breaker Switch Test".

Note

- The upper edge of the blue mark must not be above the top edge of plate edge [D], and the lower edge of the blue mark must not be below the bottom edge of plate edge [D])

8. Adjust the feet of the mainframe or peripheral so that the blue marks at the front and rear [C] are level with the plate edge [D], as explained above.

Power Cord, Breaker Switch Test

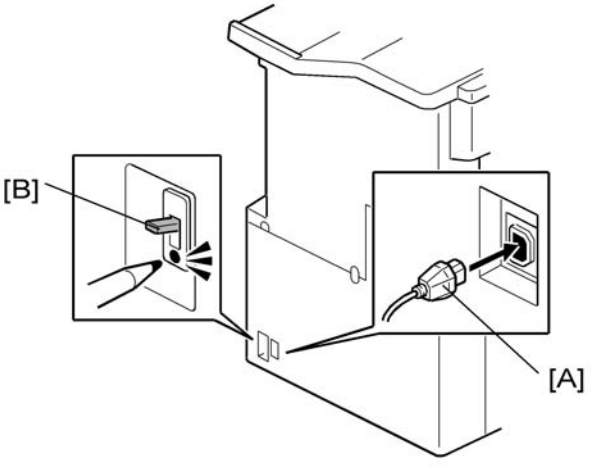

d434i110

1. Insert the socket of the power cord [A] into the power connection point.

   Important

   - **When using this unit in China, do not use the power cord in the accessories of the Booklet Finisher SR5020 (D434). Ask your supervisor and use a power cord specified for use in China.**

2. Connect the power supply cord plug into a power outlet.
3. Test the breaker switch [B] (☛ "Installation" > "Common Adjustments" > "Breaker Switch Testing").

Auxiliary Trays

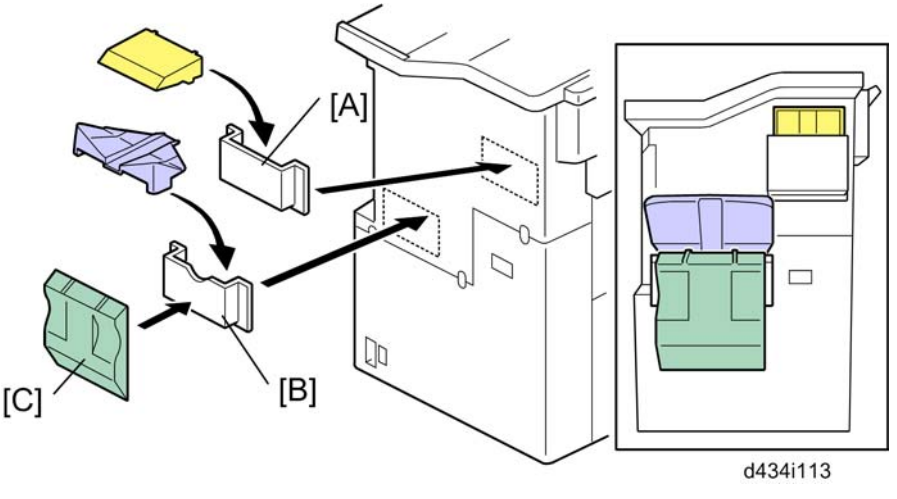

d434i113

1. Attach to the rear cover:

   [A] Z-fold auxiliary tray holder, and tray

   [B] Glossy paper auxiliary tray holder, and tray

   [C] Coated thin paper auxiliary tray

   Note

   - These tray holders can be installed on the front door if the auxiliary trays will be used frequently.

2. Instruct the operator about when to use these auxiliary trays, as explained below.

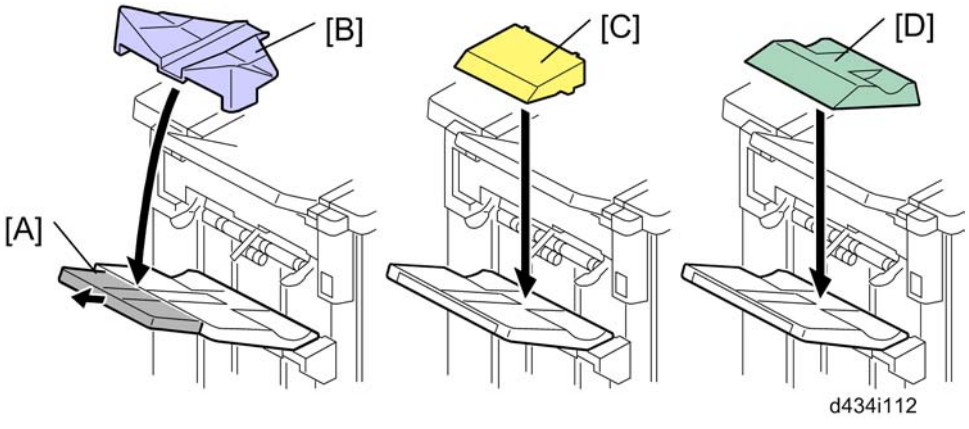

   - Before feeding glossy paper, pull out the extension [A] of the shift tray and mount the glossy paper auxiliary tray [B].
   - Before feeding Z-folded paper from the Multi Folding Unit (D454), set the Z-fold auxiliary tray [C] on the shift tray.
   - Before feeding coated thin paper, set the coated thin paper auxiliary tray [D] on the shift tray.

Check for Skew and Correct Side-to-Side Registration

1. Load some A3/DLT paper in Tray 2 of the main machine.
2. Make several copies that will exit to the shift tray.
3. Watch each sheet as it exits the machine to check for the presence of skew, and check that the side-to-side registration is correct. (☛page 302 "Skew and Side-to-Side Adjustment")

Punch Unit PU5020 NA, EU, SC (D449-17, -27, -28)

Accessories

Check the quantity and condition of the accessories in the box against the following illustration and list.

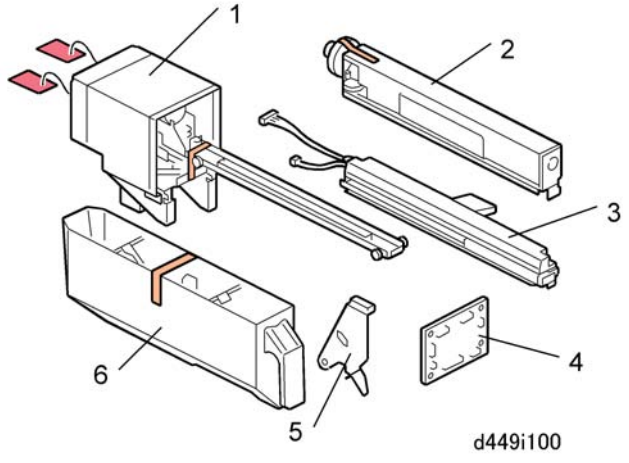

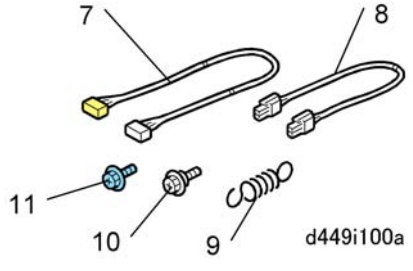

No.	Description	Q'ty
1.	Punch Drive Unit	1
2.	Punch Unit	1
3.	Punch Registration Unit	1
4.	Punch Control Board	1
5.	Sensor Arm and Sensor	1
6.	Punch-out Hopper	1
7.	Harness: Long	1

No.	Description	Q'ty
8.	Harness: Board Relay	1
9.	Spring	1
10.	Step Screw	1
11.	Screws M3x6	9

Installation

⚠CAUTION

- Make sure that the main machine is switched off and that its power cord is disconnected before doing the following procedure. (☛page 58 "Correct Procedure to Turn Off the Power ")

Shipping Materials

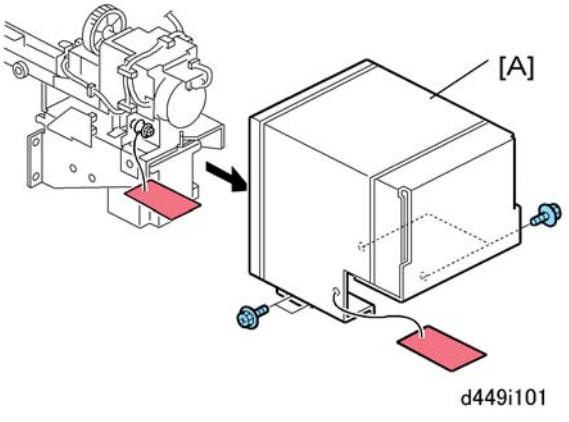

1. Remove motor protector plate [A] (x4).

Rear Cover

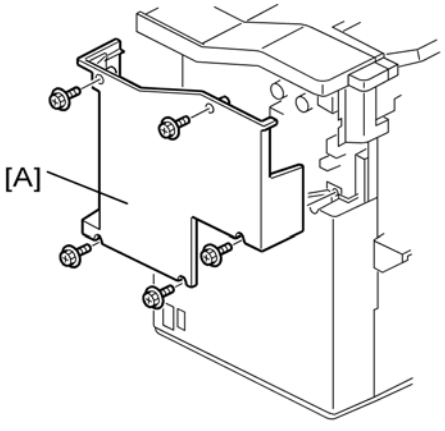

d449i102

1. Remove upper rear cover [A] (x4).

Right Upper Panel

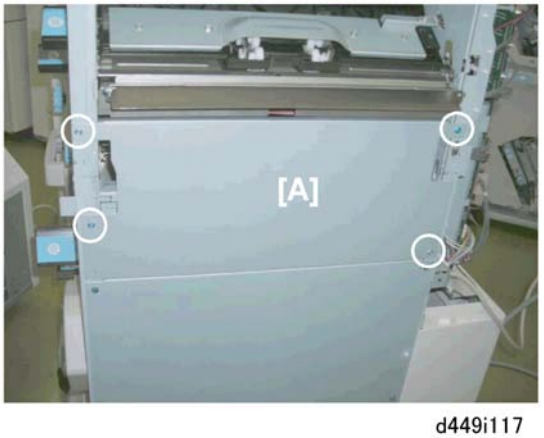

d449i117

1. Remove the right upper panel [A] (x4).

Punch Registration Unit

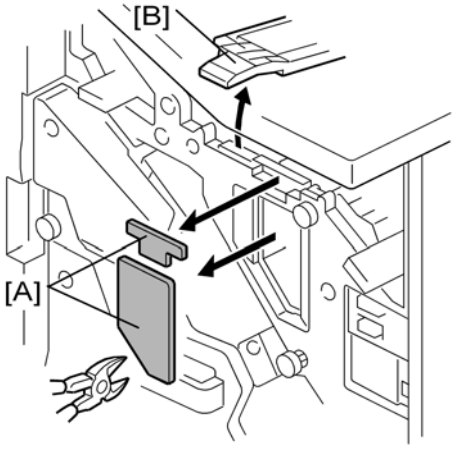

d449i103

1. Use a pair of nippers to remove knockouts [A].
2. Raise and open lever "RB3" [B].

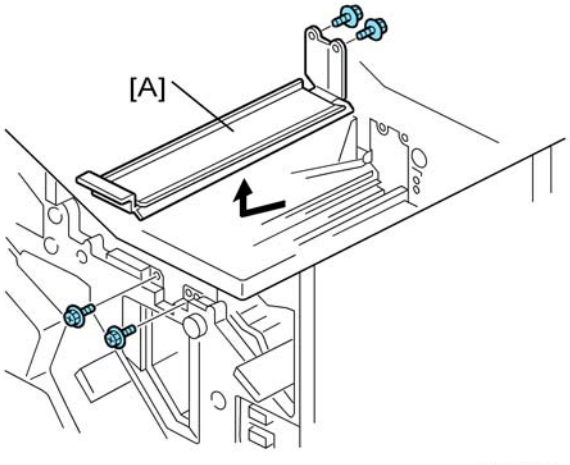

d449i104

3. Remove plate [A] and discard it (x4).

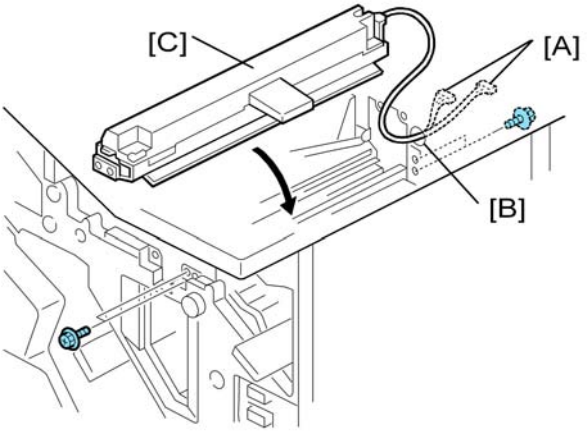

d449i105

4. Insert the harness connectors [A] through the hole [B].
5. Make sure the harness connectors are through the hole completely and visible at the rear of the machine.
6. Set and fasten the punch registration unit [C] (x4, 2 screws each at front and back).

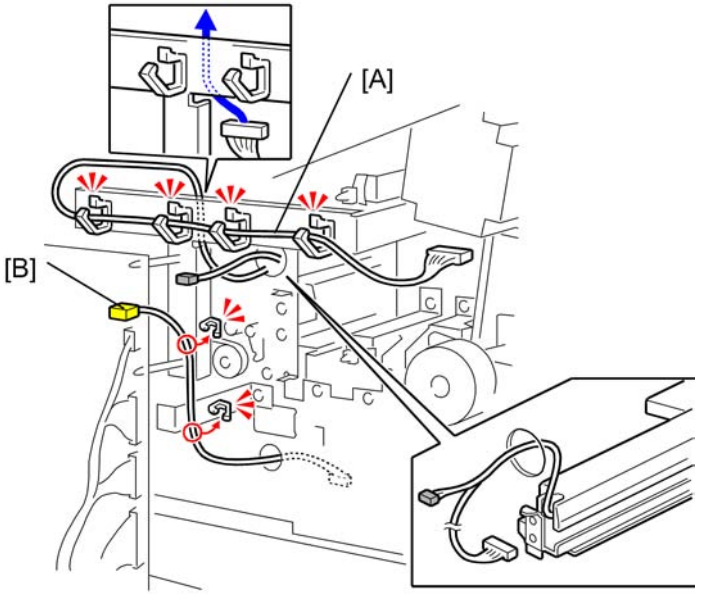

d449i106

7. Clamp harness [A] (x4).
8. Clamp harness [B] (x2).

Sensor Arm

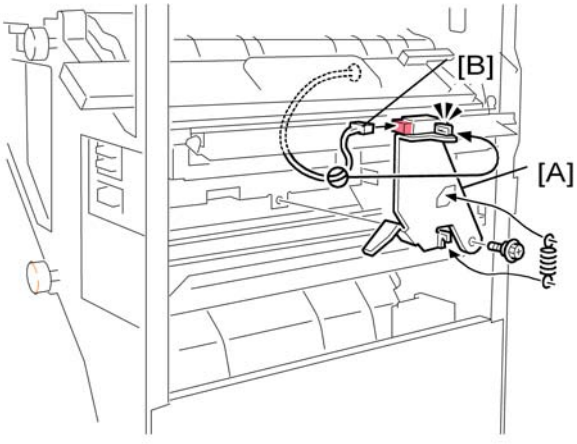

d449i107

1. Attach sensor arm [A] (x1 Step Screw, Spring x1).
2. Make sure the sensor arm swings freely on the step screw and spring.
3. Attach harness [B] to the sensor on top of the arm.

Punch Drive Unit, Punch Unit

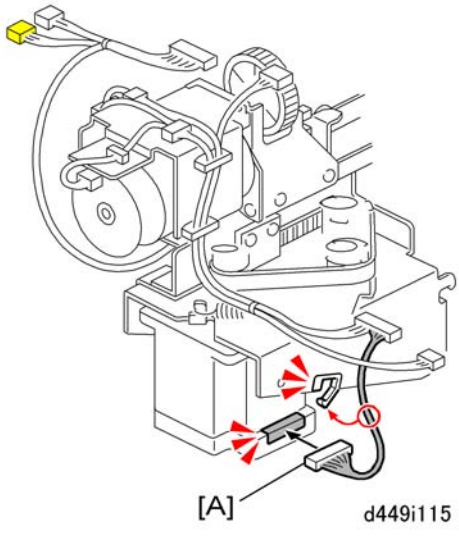

d449i115

1. On the punch unit, connect harness [A] (x1, x1).

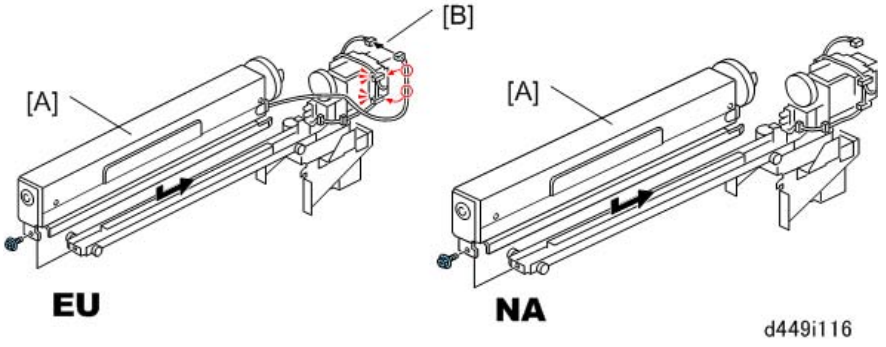

2. Attach the punch mechanism [A] to the rails of the punch unit (x1).
   - If you are installing the punch unit for Europe, connect the harness [B] (x1, x2).
   - The punch unit for North America has no punch switching motor, so this harness is not required.

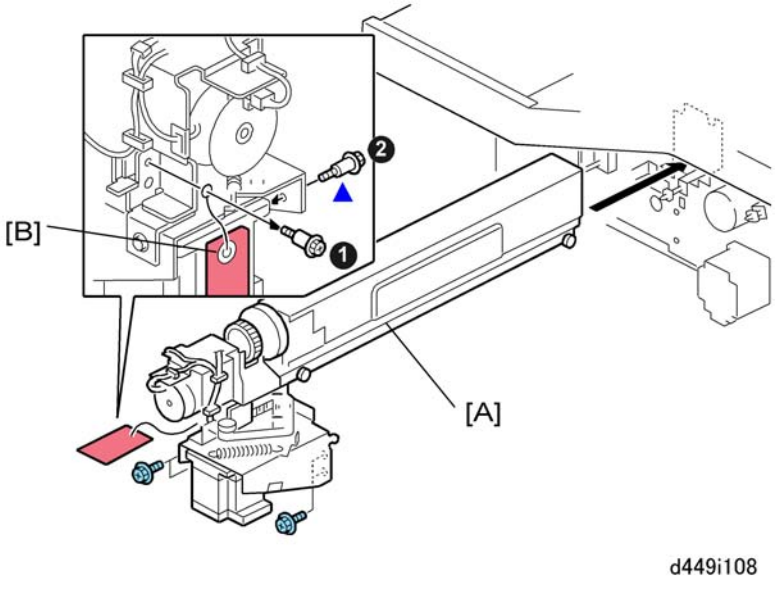

3. At the front, insert the punch unit [A] into the finisher and fasten it (x4).
4. Remove the shoulder screw with red tag [B], and detach the tag and wire.
5. After removing the screw from hole ①, re-attach it at hole ②.

Important

- **This screw must remain attached to the punch unit.**
- **Before removing the punch unit from the finisher, the screw must be removed from hole ② and re-attached at hole ①. This stabilizes the punch unit and prevents it from wobbling from side to side while it is being removed and handled after removal.**

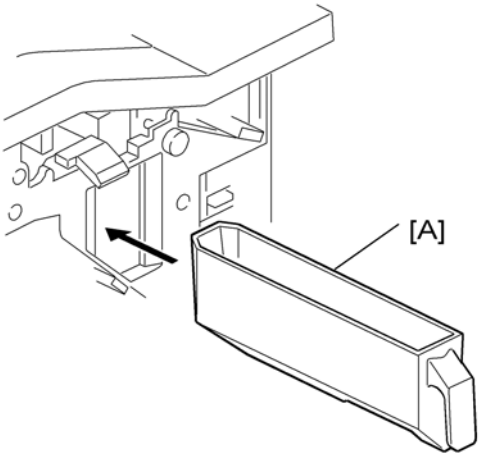

d449i109

6. At the front, slide the punch-out hopper [A] into the finisher.

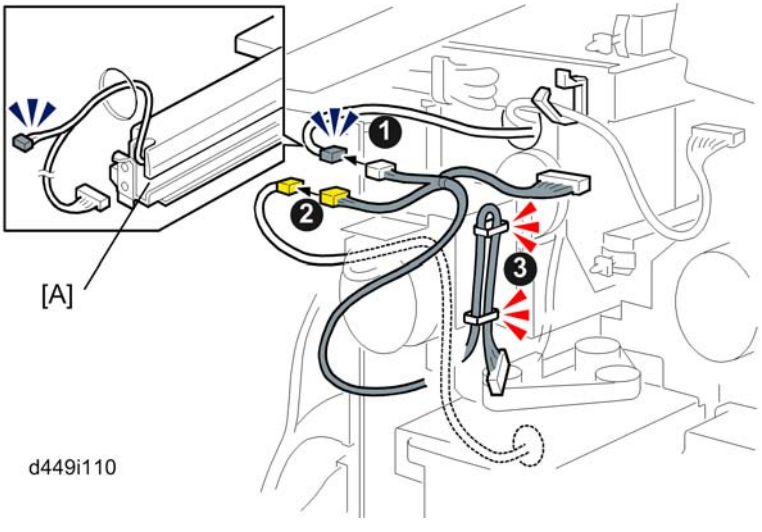

d449i110

7. Route the harnesses from the CIS unit [A] through the hole.
8. Connect the harnesses at ① and ② (x2).
9. If you are installing the punch unit for Scandinavia, fasten the extra connector (not used) at ③ (x1).

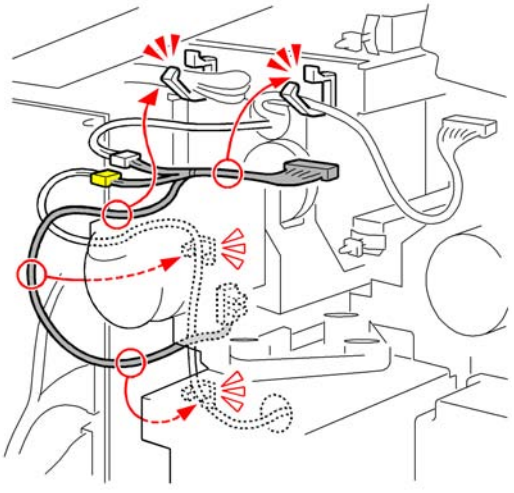

d449i110a

10. Finish clamping the harnesses as shown above.

Punch Control Board

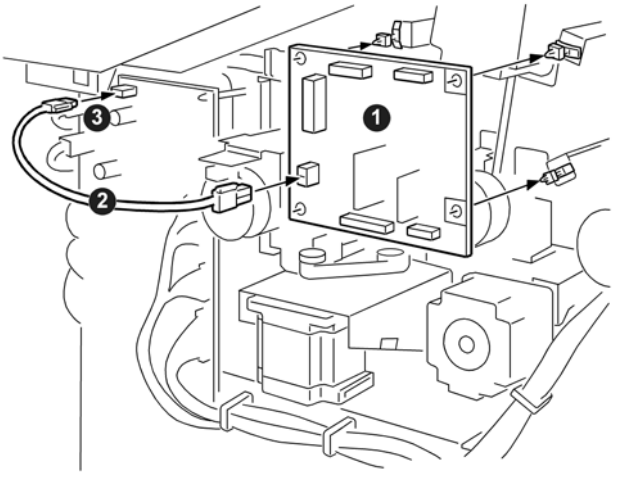

d449i111

1. Install the punch control board ① (Standoffs x4, no screws).
2. Connect the punch relay harness ② to the punch control board and punch main control board ③.

Final Connection

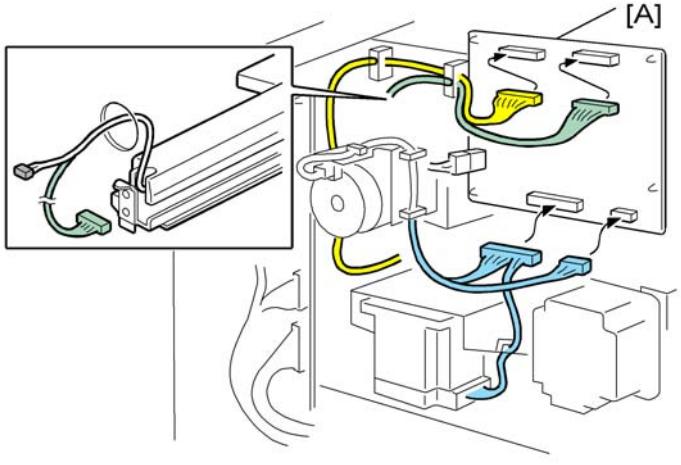

d449i112

1. Fasten the connectors to the punch unit PCB [A] (x2).

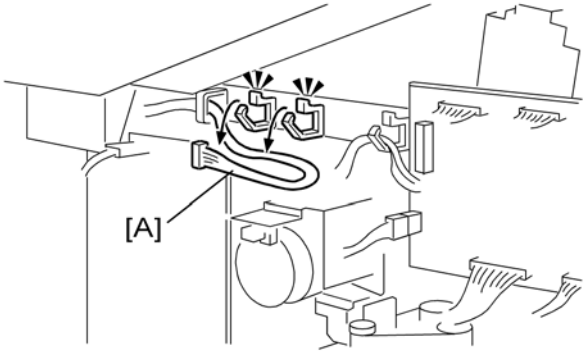

449i113

2. Release harness [A] from the frame (x2).

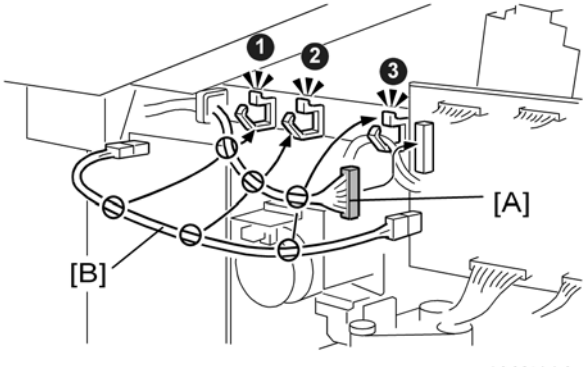

d449i114

3. Connect harness [A] to the punch control board (x1).
4. Gather harness [A] and the board relay harness [B] and clamp them (x3).

Trimmer Unit TR5020 (D455)

Note

- This unit requires the Booklet Finisher SR5020 (D434).

Accessories

Check the quantity and condition of the accessories in the box against the following illustration and list.

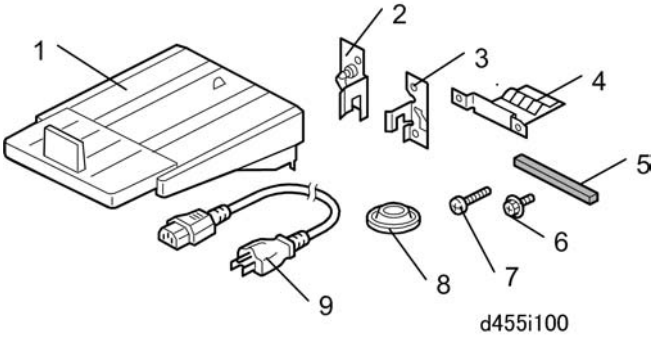

No.	Description	Q'ty
1.	Output Tray*1	1
2.	Joint Bracket – Left (Marked "L")	1
3.	Joint Bracket – Right (Marked "R")	1
4.	Ground Plate	1
5.	Sponges	2
6.	Screws (M3x6 for Ground Plate)	2
7.	Screws (M4x10 for Joint Bracket)	4
8.	Leveling Shoes	4
9.	Power Cord	1

*1: Screws (x2) for the output tray are attached to the left side of the unit.

Installation

⚠CAUTION

- Make sure that the main machine is switched off and that its power cord is disconnected before doing the following procedure. (☛page 58 "Correct Procedure to Turn Off the Power ")

Tapes, Stopper Plate

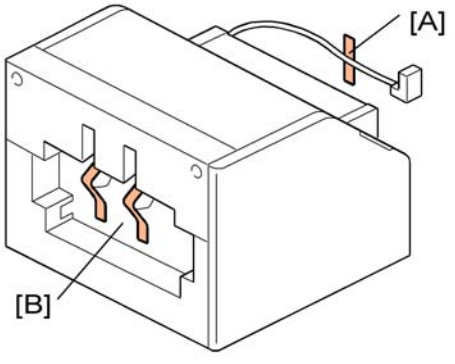

d455i101

1. Remove the tape on the right side to free the I/F cable [A].
2. Remove the tape from the left side [B].

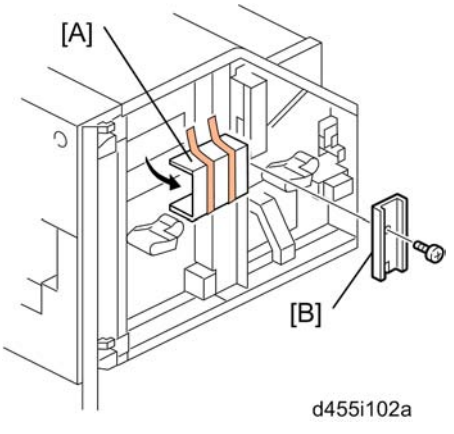

d455i102a

3. Open the front door and remove the retainer [A].
4. Remove the stopper plate [B] (x1).

Note

- Keep the stopper plate. It should be re-installed before transporting the unit to a new location.

Output Tray

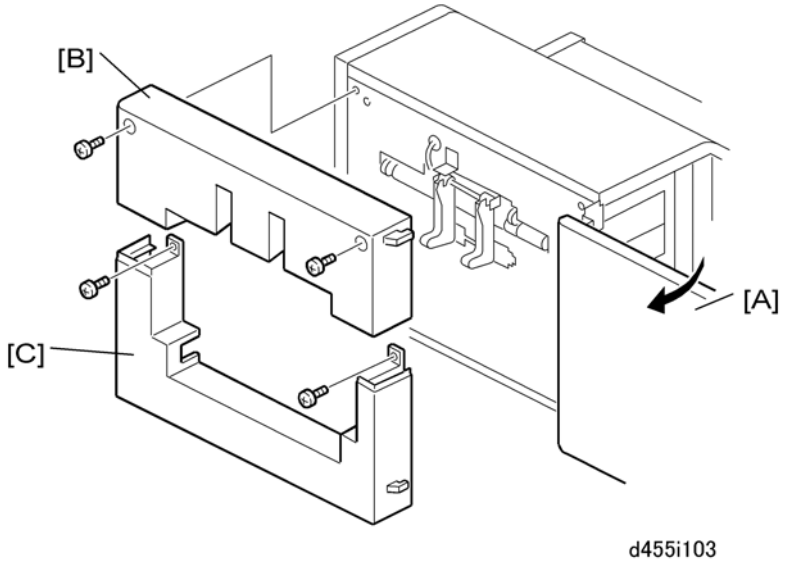

1. Make sure that the front door [A] is open.
2. Remove:

   [B] Left upper cover(x2)

   [C] Left lower cover (x2)

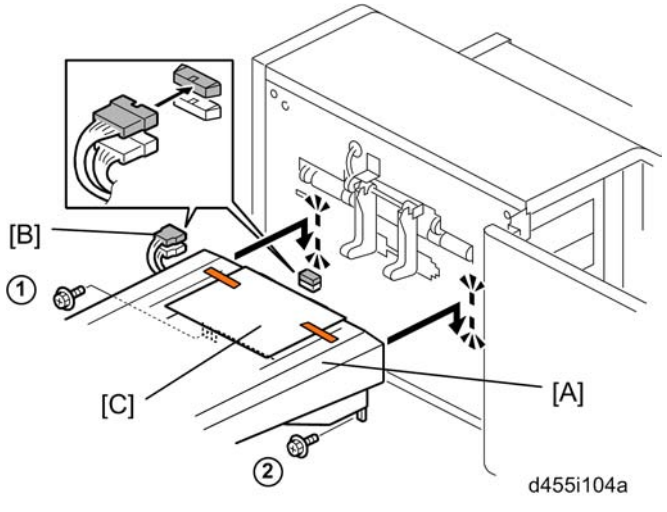

3. Remove the screws ① and ② from the left side.
4. Use the removed screws to attach the output tray [A].
5. Connect the output tray at [B].
6. Remove the sheet [C] of paper.

- Do not remove this sheet [C] of paper before connecting the output tray to the trimmer unit.

7. Reattach the left lower cover and left upper cover.

Ground Plate

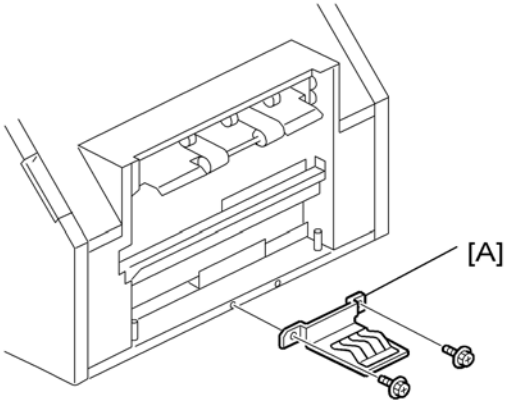

d455i105

1. Attach the ground plate [A] to the right bottom edge (x2 M3x6).

Preparing the Booklet Finisher (D434) for Docking

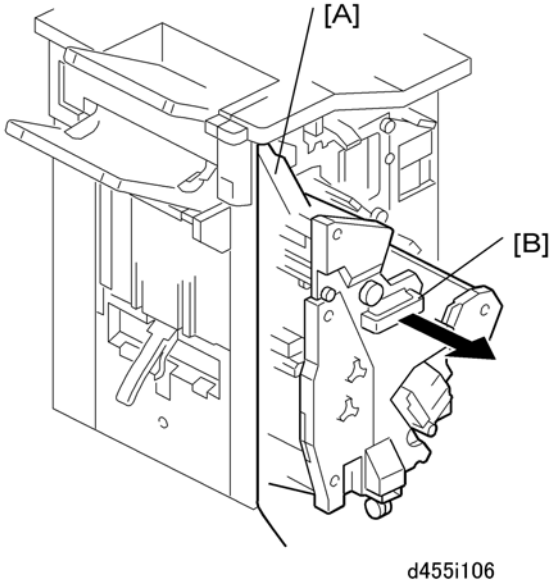

d455i106

1. Open the front door [A] of the finisher.

2. Pull out the staple unit [B].

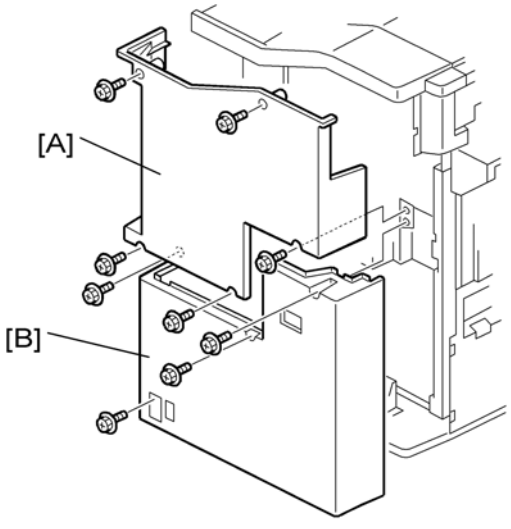

d455i107

3. At the rear of the finisher, remove:

   [A] Rear upper cover (x5)

   [B] Rear lower cover (x4)

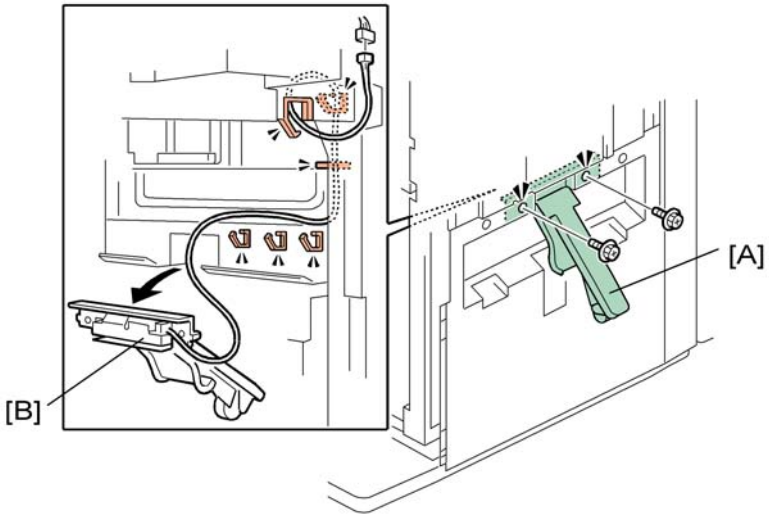

d455i108

4. Unfasten the booklet tray sensor actuator arm [A] (x2).
5. Disconnect the actuator arm [B] and remove it (x5, x1).
6. Store the actuator arm in a safe location for future use.
7. Reinstall the rear upper and lower cover.

Docking

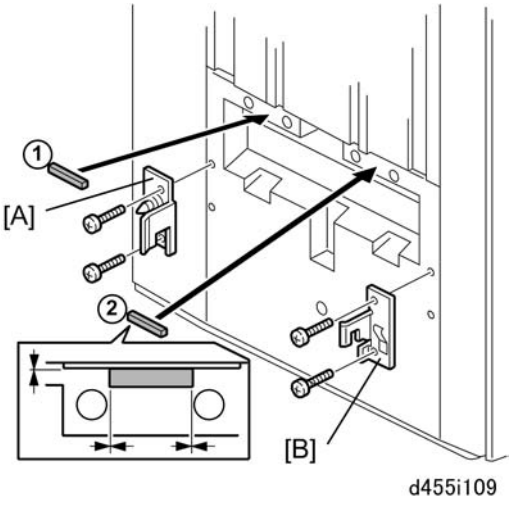

1. Attach:

   [A] Left joint bracket, marked "L" (x2, M4x10)

   [B] Right joint bracket, marked "R" (x2, M4x10)

2. Peel the tape from the back of the sponges and attach sponge ① and ②.

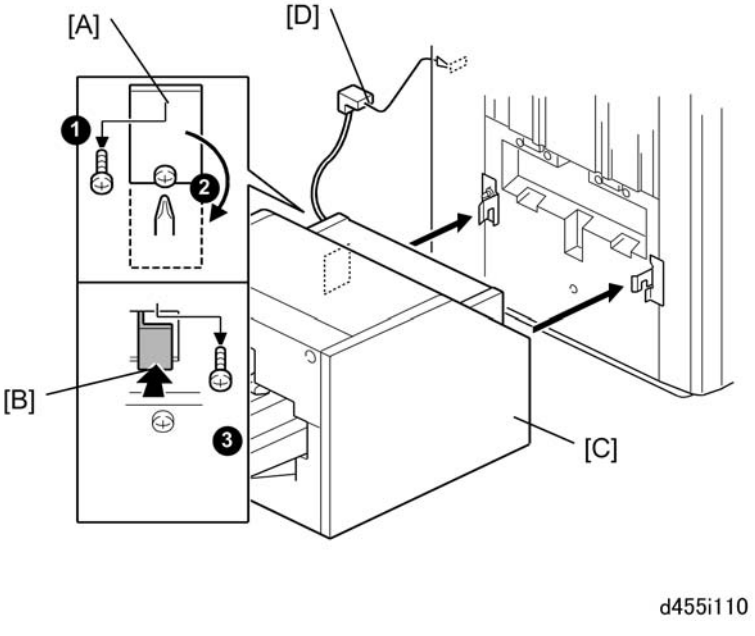

3. At the rear, remove screw ① from plate [A].
4. Loosen screw ② and lower the plate so you can see the lock bar [B].
5. Remove lock bar screw ③ (x1 M3x6). **Keep this screw.**

6. Push the lock bar [B] until it is unlocked.
7. Slowly push the unit [C] against the left side of the finisher so that the lock bar is directly and squarely under the arms of the joint brackets.
8. At the rear, pull lock bar [B] toward you so that it slides up into the notches in the arms of the joint brackets.
9. Fasten the lock bar by re-attaching the screw removed in Step 5. (x1).
10. Connect the unit I/F cable [D] to the finisher.
11. Connect the plug of the power cord to the power source.

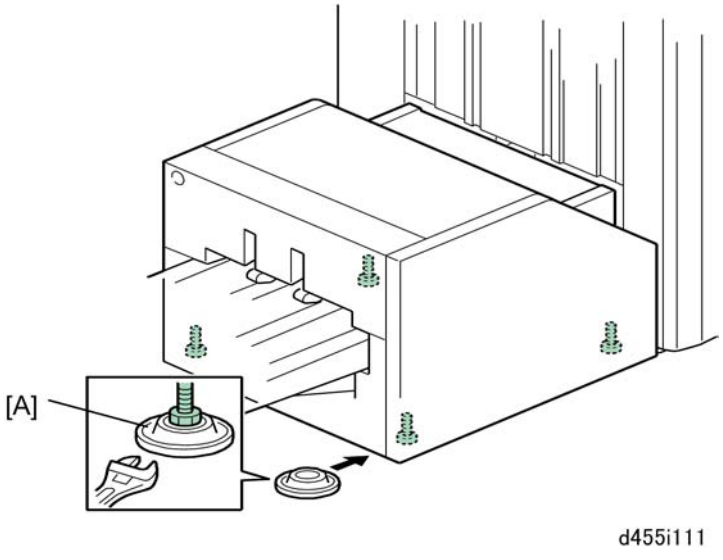

12. Set a leveling shoe [A] under each corner of the unit.
13. At each corner, turn the nut to lower the bolt onto each shoe.
14. Use a level to check each side of the unit.
15. Turn each nut to adjust the height of each corner until each side is level.

Finisher SR5000 (B830)

Accessories

Finisher SR5000 B830 Accessories

Check the accessories and their quantities against this list.

	Description	Q'ty
1.	Sponge Strip	1
2.	Entrance Guide Plate	1
3.	Ground Plate	1
4.	Joint Bracket	1
5.	Shift Tray	1
6.	Leveling Shoes	4
7.	Tapping Screws – M3 x 6	6
8.	Screws – M4 x 8	4
9.	Support Plate Pocket	1
10.	Support Plate	1
11.	Support Plate for Proof Tray	1
12.	Side Tray	1

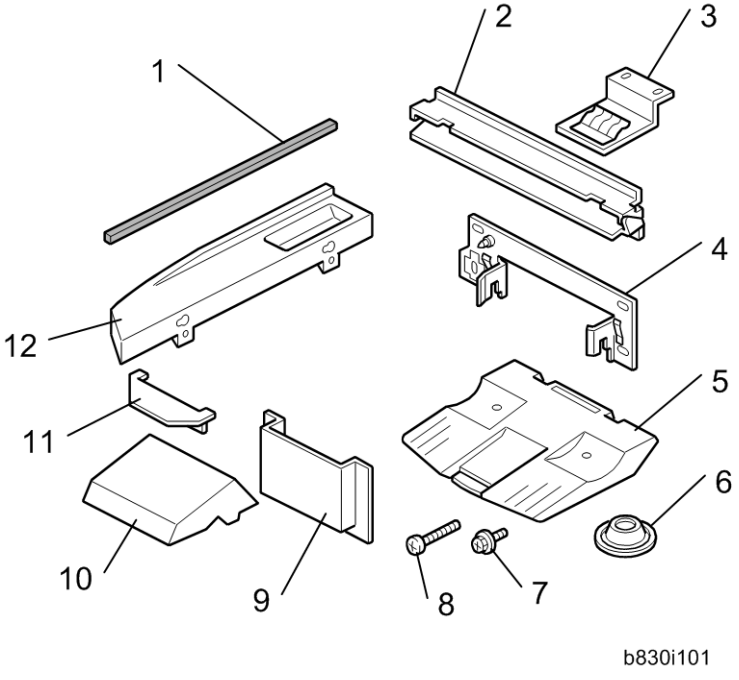

Finisher Installation

The firmware of this finisher (B830) must be ver.1.18 or more when installing in the D095 or M077 model. For details about updating firmware, see the "Firmware Update" in the chapter "Service Tables".

⚠ WARNING

- Turn the machine off and disconnect the machine power cord before you do this procedure. (☛ page 58 "Correct Procedure to Turn Off the Power ")

Removing tape and shipping retainers

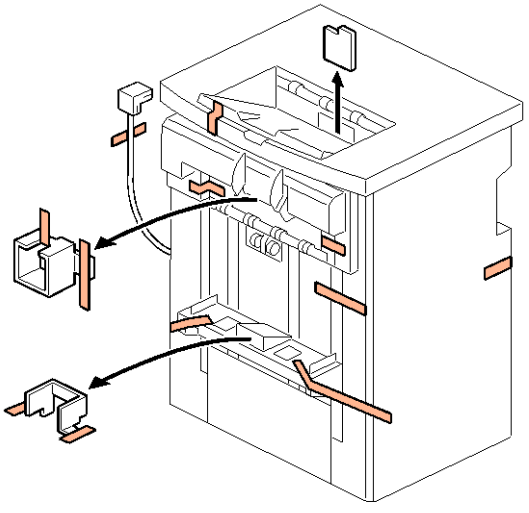

b830i102

1. Unpack the finisher and remove all strips of tape and shipping retainers.

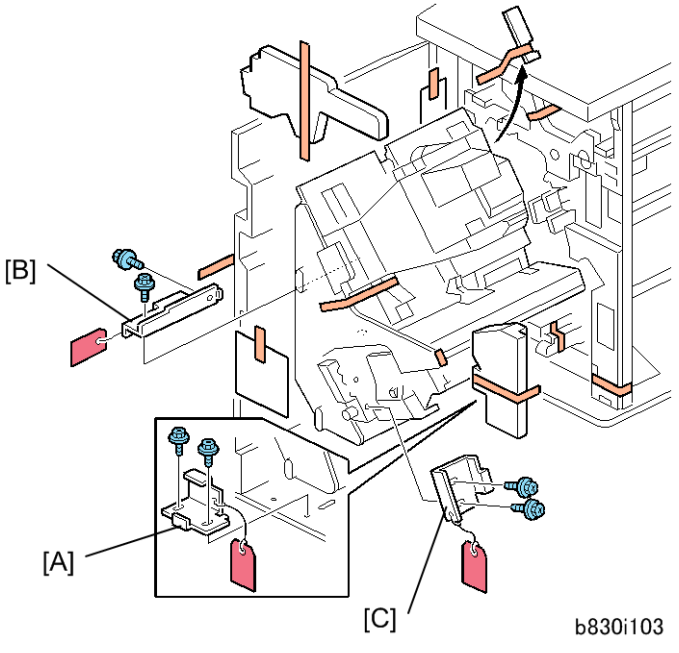

b830i103

2. Open the front door and remove the shipping retainers.
3. Remove the brackets, tags, and wires in this order: [A], [B], [C] (x 2 each).

Preparing before Docking

Next to the mainframe (D095 or M077)

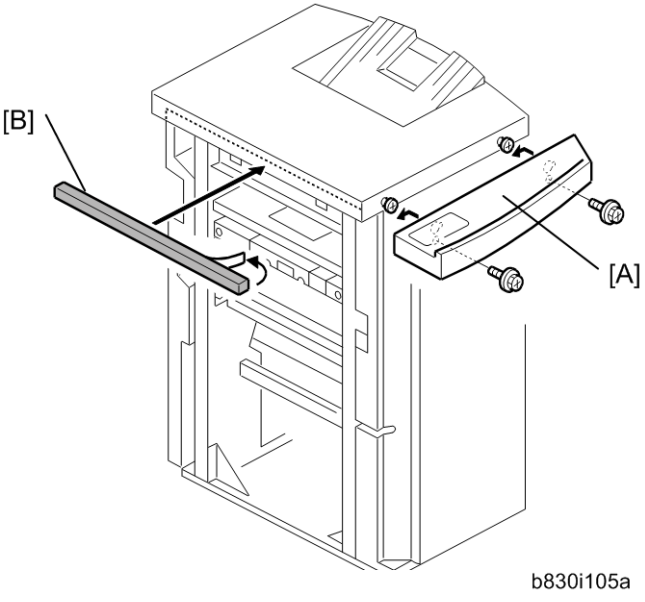

1. Install the table extension [A] (x 2: M4 x 8).

Note

- The edge of the table extension should be aligned with the edge of the finisher.

2. Attach the cushion [B] to the right side of the upper cover.

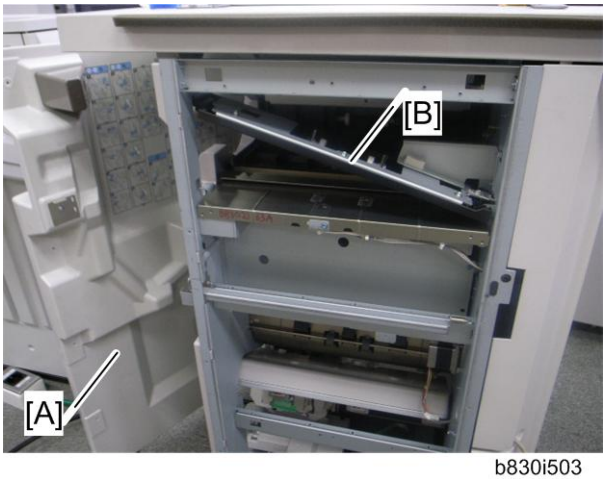

b830i503

3. Open the front cover [A] and entrance guide [B] of the finisher.

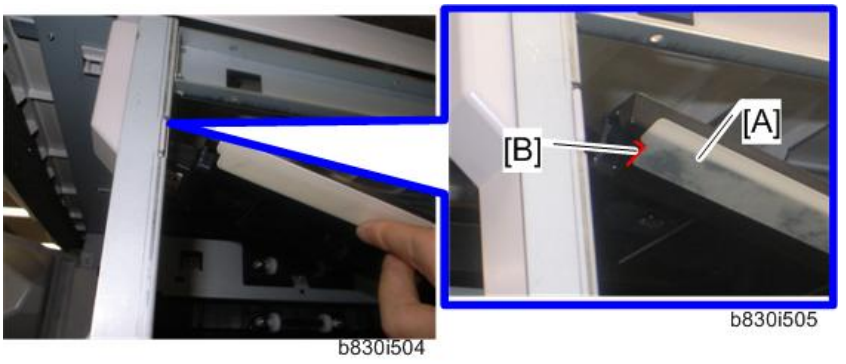

4. Align the mylar [A] (provided with the D095 or M077) with the edge [B] of the entrance guide as shown, and then attach it.

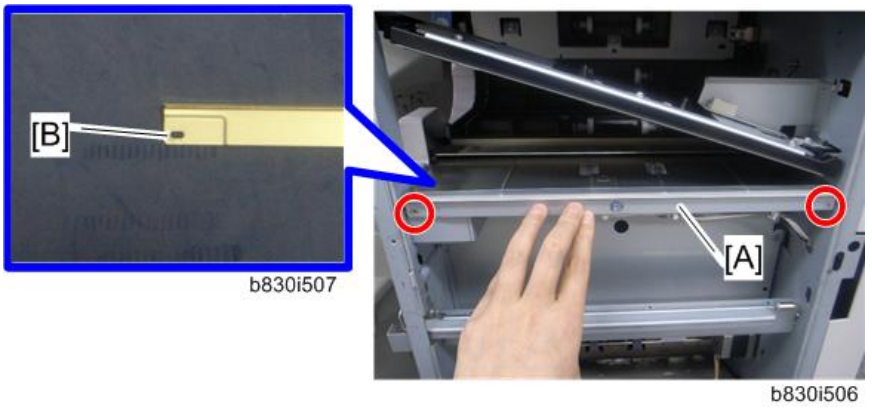

5. Install the entrance guide plate [A] provided with the D095 or M077 (x 2: M3 x 6).

Note

- The screw hole [B] should be at the front side of the machine.

6. Close the entrance guide and front cover of the finisher.

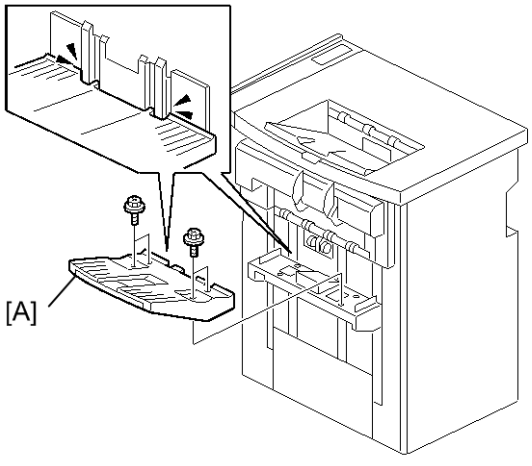

b830i109

7. Insert the shift tray [A] into the grooves and fasten it (x 4: M3 x 6).

Next to another option

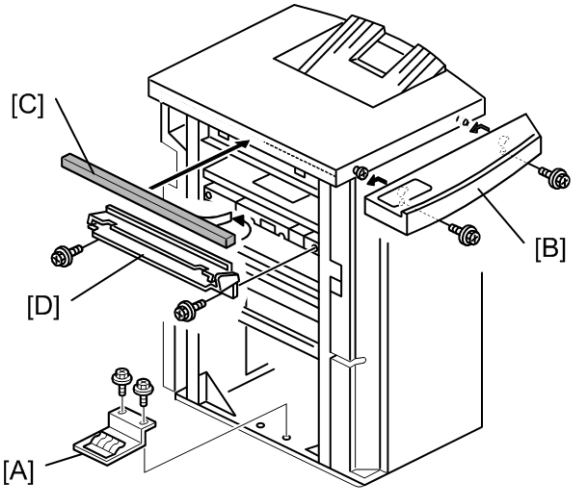

b830i105

1. Install the ground plate [A] (x 2: M3 x 6).

Note

- If this finisher is to be installed next to the Z-Folding Unit B660, use the ground plate provided with the Z-Folding Unit. See Z-Folding Unit ZF4000 (B660)in the chapter "Installation".
- Set the ground plate so that there is no gap between the plate and the bottom frame of the finisher.

2. Install the table extension [B] (x 2: M4 x 8).
3. Attach the cushion [C] to the right side of the upper cover.

Note

- The edge of the table extension should be aligned with the edge of the finisher.

4. Install the entrance guide plate [D] (x 2: M3 x 6).

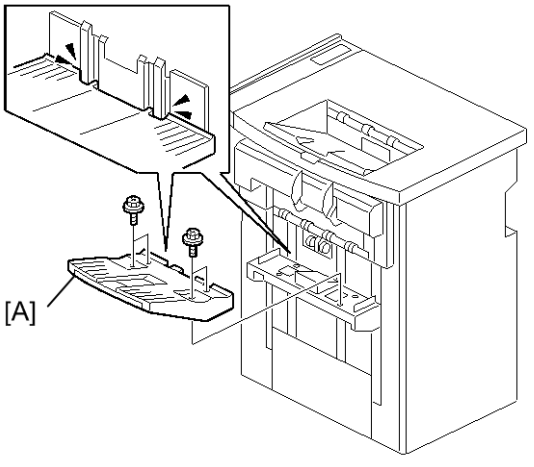

b830i109

5. Insert the shift tray [A] into the grooves and fasten it (x 4: M3 x 6).

Docking the Finisher B830

The Finisher (B830) is docked to:

- Z-folding unit
- Cover Interposer tray (if Z-Folding Unit B660 is not installed)
- Mainframe (if Z-Folding Unit B660 and Cover Interposer Tray B835 are all not installed.)

Finisher B830 to Z-Folding Unit B660

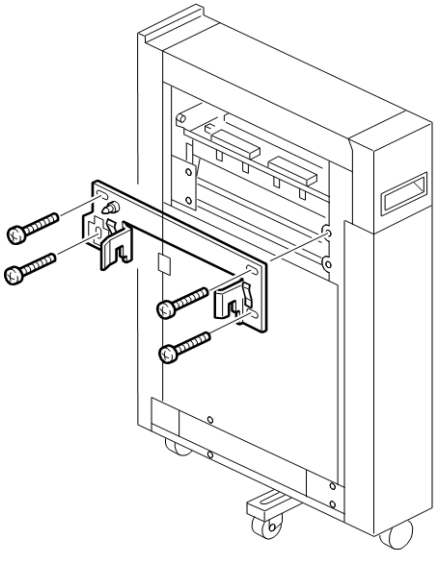

b830i204

1. Fasten the joint bracket to the Z-Folding Unit B660 (x 4: M4x8).
2. Dock the finisher. (Go to 'Connecting the Finisher B830'.)

Finisher B830 to Cover Interposer Tray B835

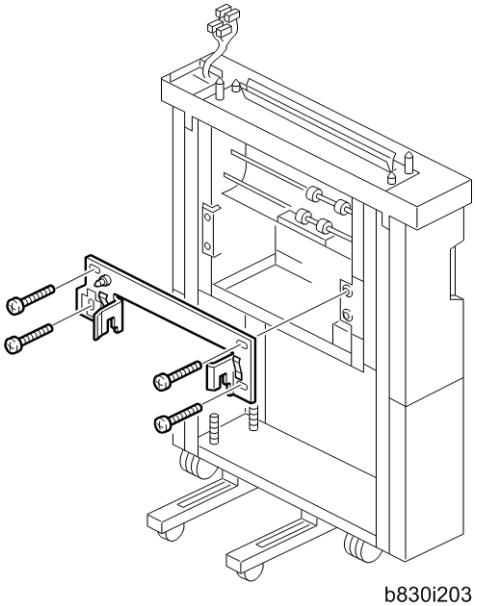

b830i203

1. Fasten the joint bracket to the Cover Interposer Tray B835 (x 4: M4x8).
2. Dock the finisher. (Go to 'Connecting the Finisher B830'.)

Finisher B830 to Mainframe

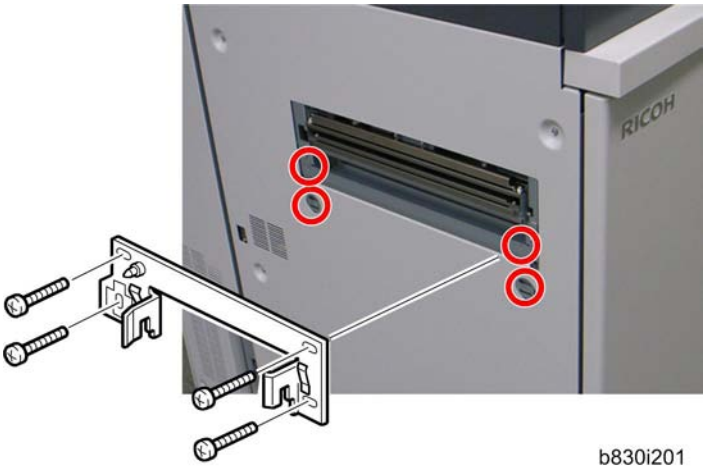

1. Fasten the joint bracket to the mainframe (x 4: M4x8 provided with the mainframe).
2. Dock the finisher. (Go to 'Connecting the Finisher B830'.)

Connecting the Finisher B830

Important

- **If this finisher is to be installed next to the Z-Folding Unit B660, see Z-Folding Unit ZF4000 (B660)in the chapter "Installation".**

1. Open the front door of the finisher.

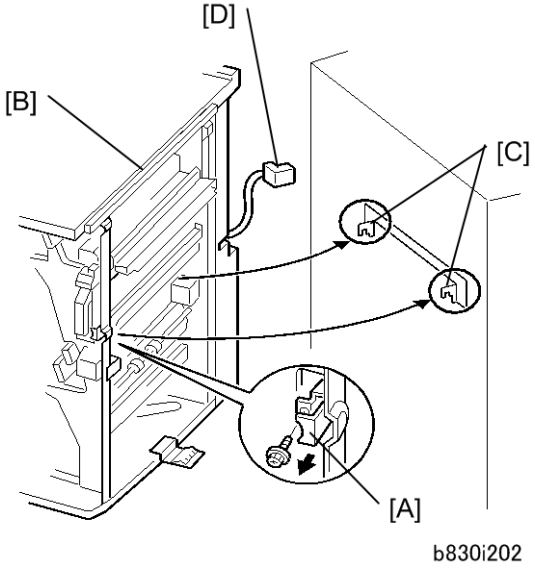

2. Pull out the locking lever [A] (x 1).

3. Align the finisher [B] with the joint brackets [C], then slowly push the finisher onto the brackets.
4. Connect the finisher cable [D] to the mainframe or peripheral.

Important

- **If this finisher is installed left next to the mainframe, "Peripheral Height Adjustment" is required. See the "Peripheral Height Adjustment" following this procedure.**

5. Push in the locking lever [A].
6. Check that the top edges of the finisher are parallel with edges of the device (or mainframe) to the right.
7. Fasten the locking lever [A] (x 1)
8. Close the front door.

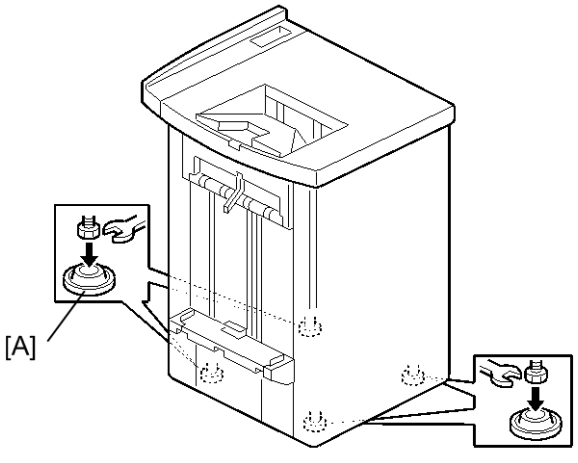

b830i206

9. Set the leveling shoes [A] (x4) under the feet.
10. Turn the nuts to adjust the height of the finisher until it is level.
11. Turn on the main power switch.
12. Enter the SP mode, and then execute SP5-805-016.

Peripheral Height Adjustment

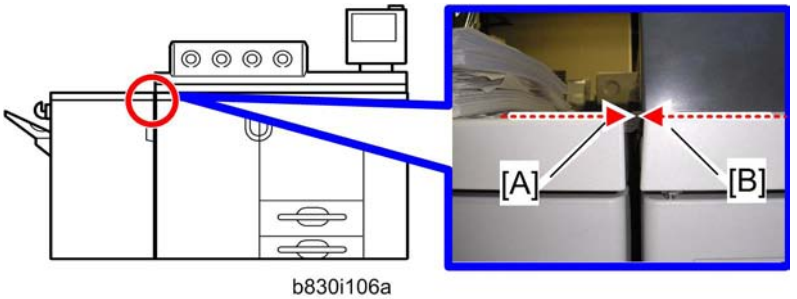

b830i106a

1. Check the front top edge [A] of the B830 finisher and the front top cover edge [B] of the mainframe.

   Note

   - The difference between these edges [A] [B] should be within ± 2mm.

2. Check the rear top edges as well as the front edges.
3. Adjust the feet of the mainframe or peripheral so that the front and rear top edges of the B830 finisher are level with the front and rear edges of the mainframe.

Support Tray

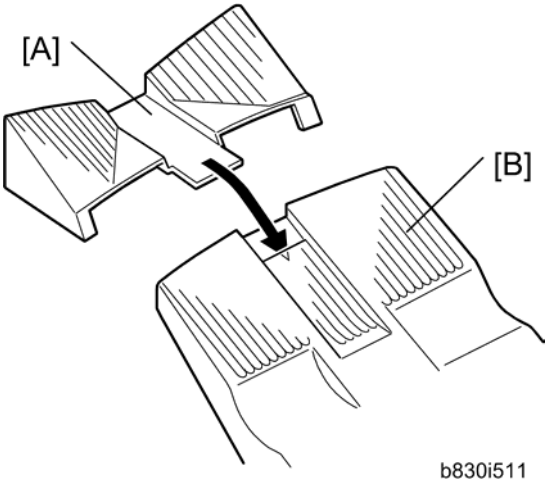

b830i511

If a customer will use a large size (B4 or Legal or more) of coated paper, attach the support tray [A] (provided with D095 or M077) to the shift tray [B] of the finisher.

Punch Unit PU5000 (B831)

The Punch Unit B831 is installed in the Finisher SR5000 B830.

Accessories

Check the accessories and their quantities against this list.

	Description	Qty
1.	Punch unit	1
2.	Punch Waste Hopper	1
3.	Spacer (2 mm)	1
4.	Spacer (1 mm)	1
5.	Knob	1
6.	Step Screw	1
7.	Screw (M4 x 6) Black	1
8.	Screw (M3 x 10)	2
9.	Spring	1
10.	Machine Screw, Washer (M4 x 6)	1

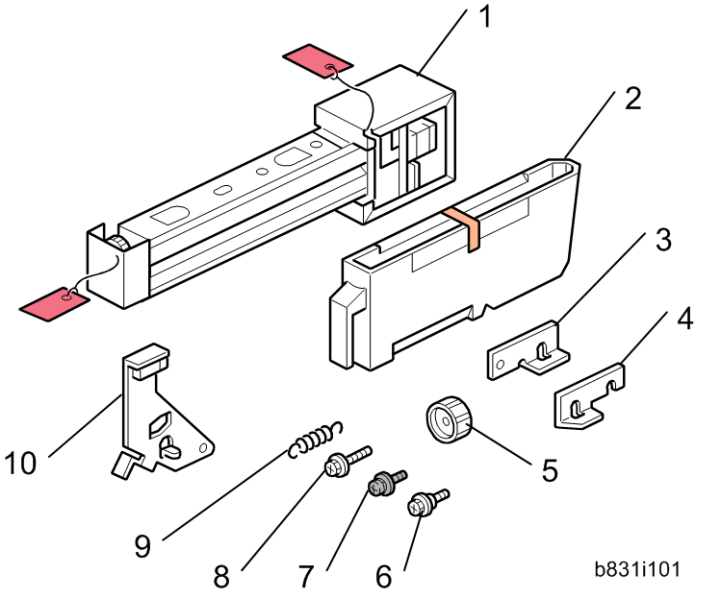

Installation

⚠ WARNING

- Turn the machine off and disconnect the machine power cord before you start this procedure. (page 58 "Correct Procedure to Turn Off the Power ")

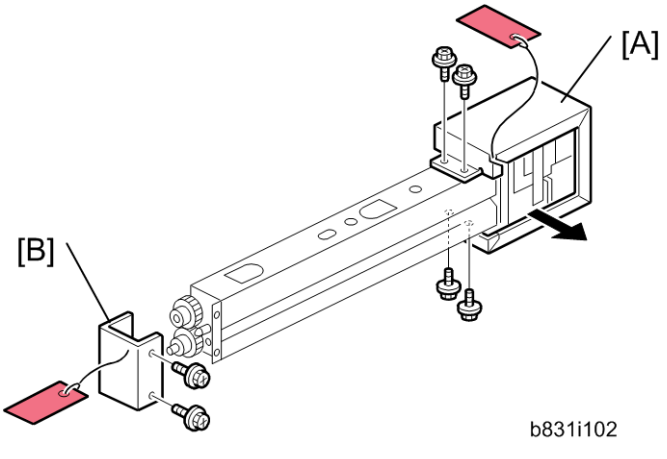

1. If the finisher is connected to the machine, disconnect it.
2. Open the front door and remove the rear cover (x 2).
3. Remove the punch unit from its packing materials. Remove the motor protector plate [A] (x 4) and the cam lock plate [B] (x 2).

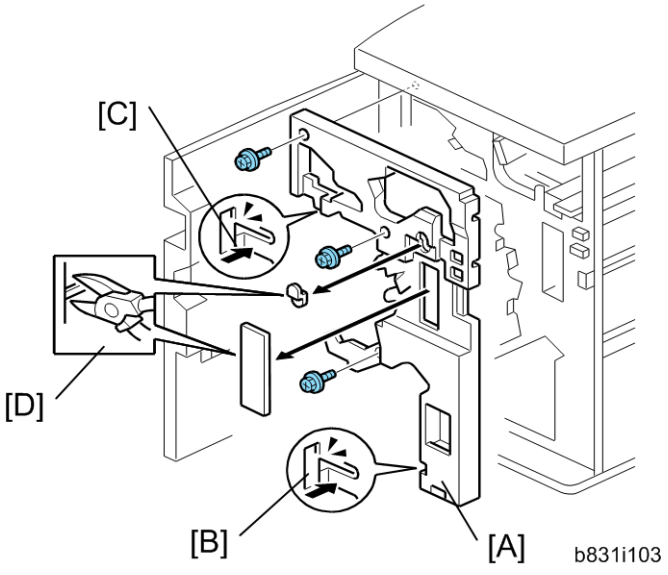

4. Remove the inner cover [A] (x 3).
5. Behind the inner cover at [B] and [C], push the lock tabs to the right to release the inner cover from the frame.
6. Remove the plastic sections [D] from the cover.

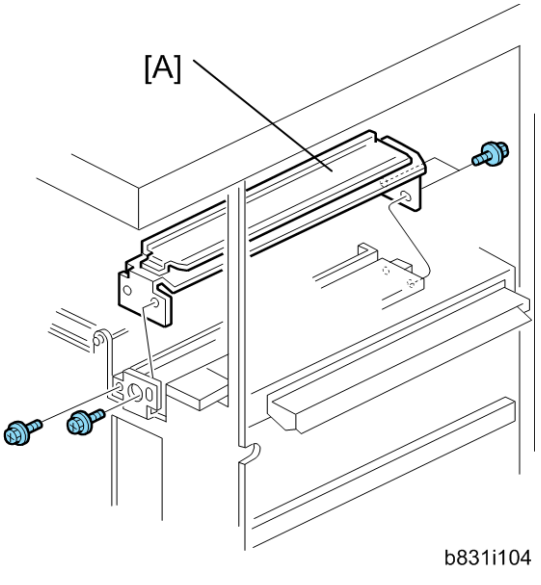

7. Remove the paper guide [A] (x 4).

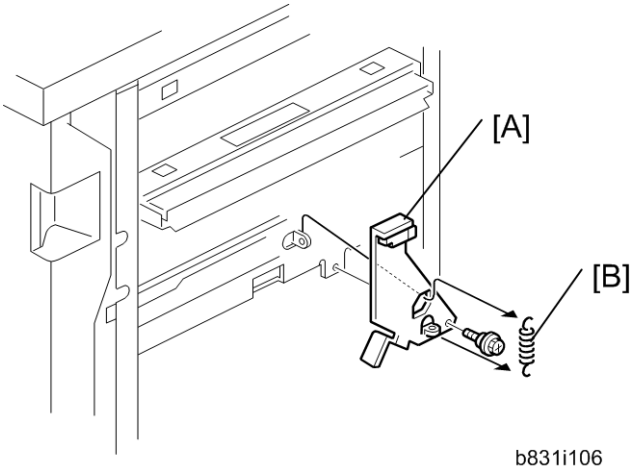

b831i106

8. Install the sensor arm [A] (x 1, small step screw (M3 x 4).

Note

- Make sure that the sensor arm turns freely on the step screw.

9. Attach the spring [B].

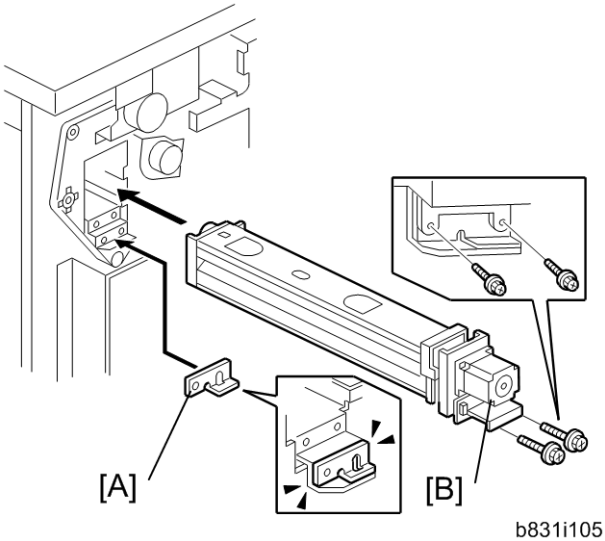

b831i105

10. Position the 2 mm spacer [A] and attach the punch unit [B]. (x 2, M3 x 10).
11. Use one of the screws removed from the motor protector plate to fasten the remaining two spacers to the frame as shown.

Note

- These extra spacers can be used to adjust the position of the punch holes (front to rear, across the page).

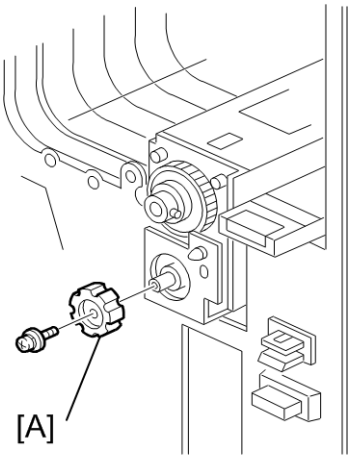

b831i108

12. At the front, attach the punch unit knob [A] (x 1).

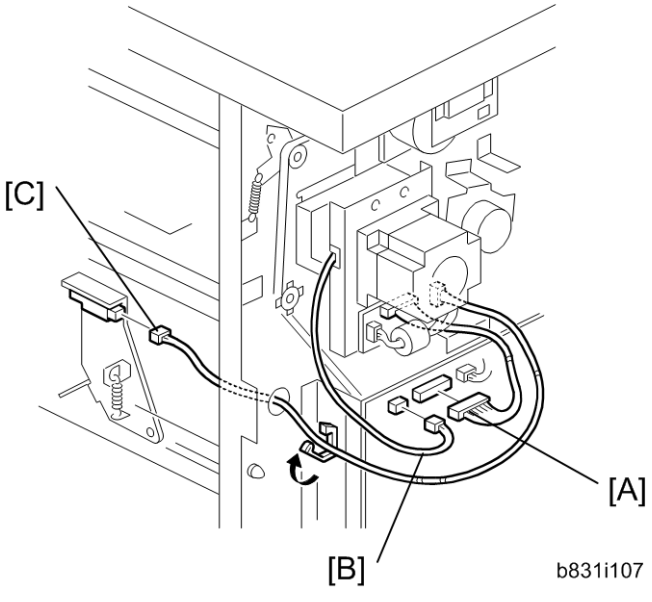

b831i107

13. Connect the PCB harness connector [A] to CN129 of the finisher PCB and to CN600 of the punch unit PCB.
14. Connect the HP Sensor 2 harness connector [B] to CN130 of the finisher PCB and to HP Sensor 2.
15. Connect the end of the hopper-full-sensor cable that has one connector [C] to the hopper full sensor on the arm (x 1, x 1).

Note

- No special DIP switch settings are necessary for this punch unit. The punch unit sends an identification signal to the machine. Then the machine knows the type of punch unit that is installed.

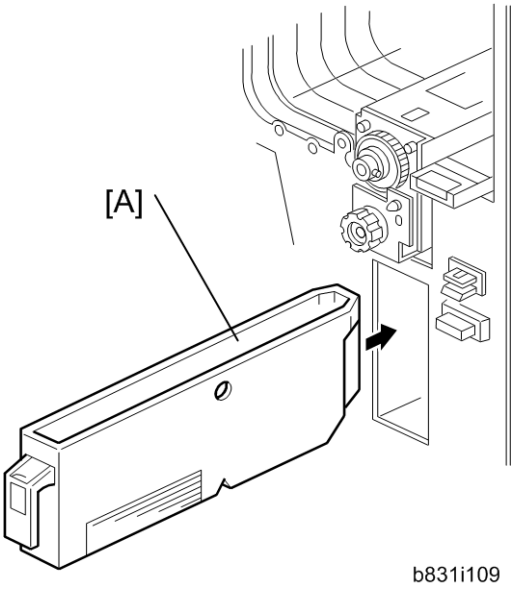

16. Put the hopper [A] in the finisher.
17. Attach the inner cover and rear cover.
18. Close the front door and connect the finisher to the machine.

Cooling Fan Unit Type 5000 (B831)

Component Check

Check the quantity and condition of the accessories against the following list.

No.	Description	Q'ty
1	Cooling Fan Unit	1
2	Upper Cover	1
3	Lower Cover	1
4	Screw: M3x6	7

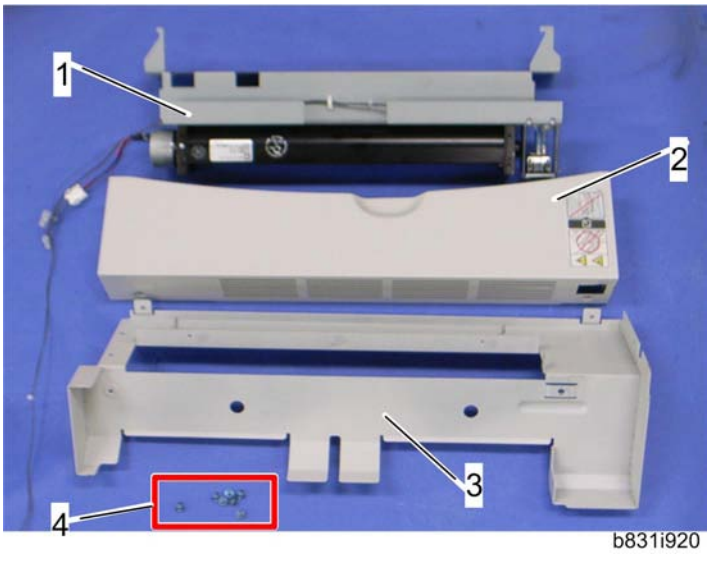

Installation Procedure

⚠CAUTION

- Switch the machine off and unplug the machine before starting the following procedure. (☛ page 58 "Correct Procedure to Turn Off the Power ")

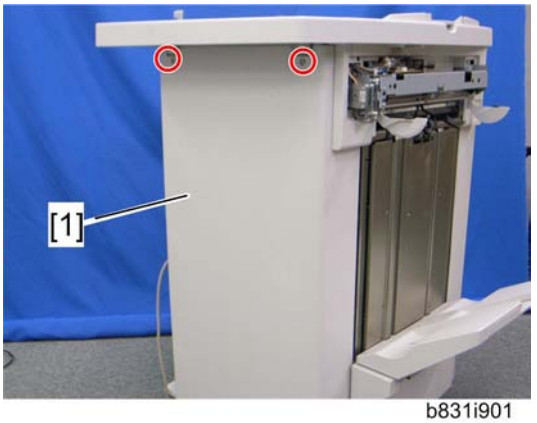

b831i901

1. Remove the rear cover [A] of the finisher (B830) (x 2).

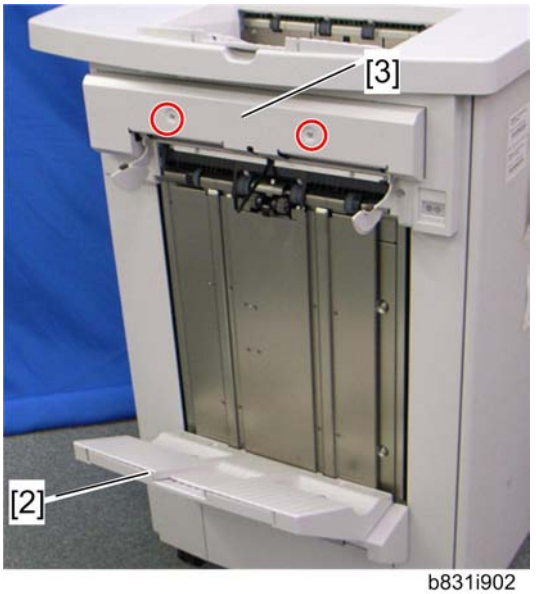

b831i902

2. Lower the shift tray [2] if the shift tray is at the top position.
3. Remove the jogger unit cover [3] (x 2).

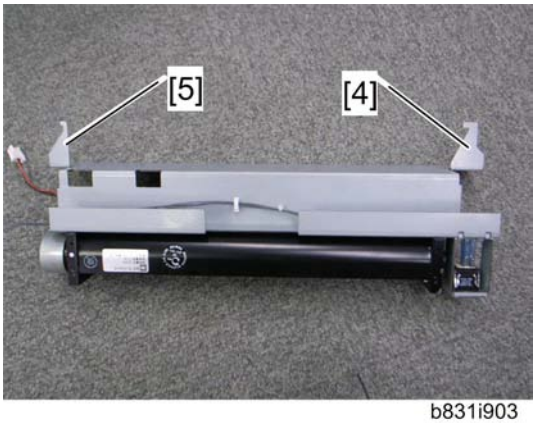

b831i903

b831i906

4. Align the hooks [4] [5] of the fan unit frame with the cutouts [6] [7] at the front and rear of the finisher frame.
5. Put the front hook [4] into the front cutout [6] first, and then the rear hook [5] into the rear cutout [7].

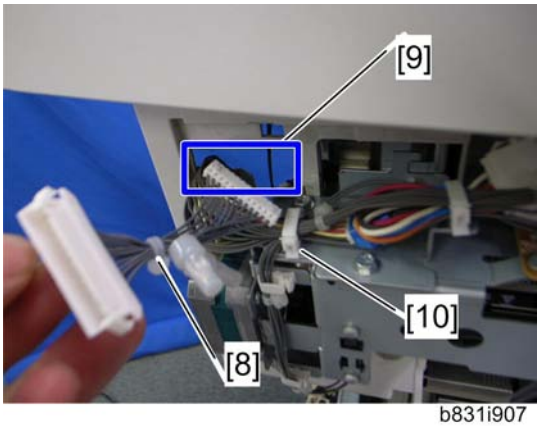

b831i907

6. Put the harness [8] of the cooling fan unit through the cutout [9] in the finisher frame, and clamp the harness with the clamp [10].

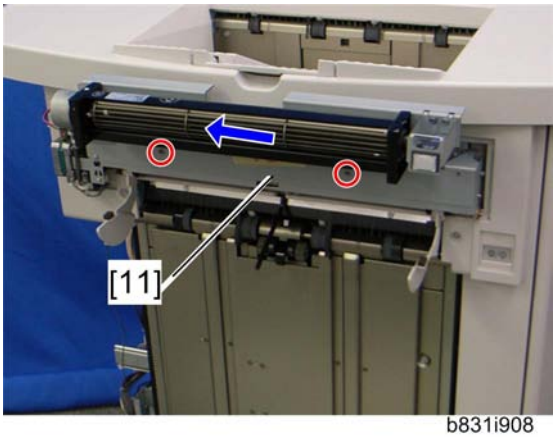

b831i908

7. Slide the cooling fan unit [11] to the rear side, and then secure it with two screws.

Note

- Use the screws which were removed in step 3

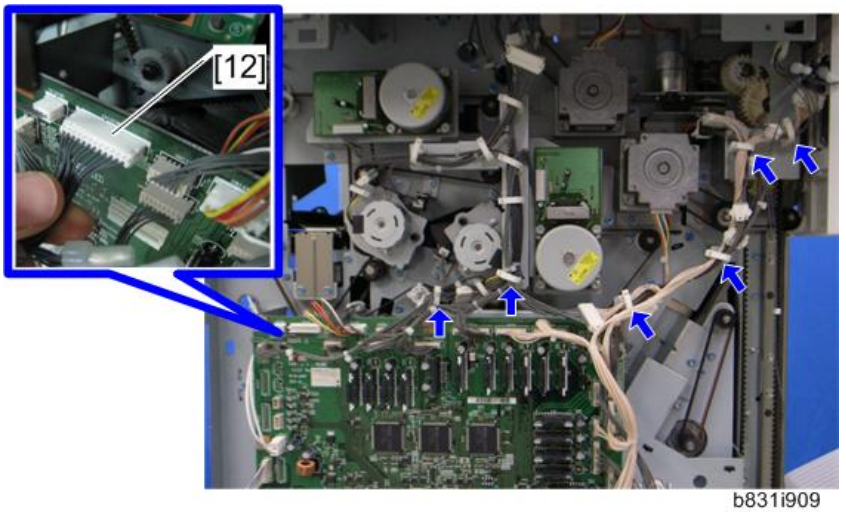

b831i909

8. Connect the harness of the cooling fan unit to CN135 [12] on the finisher main board, and then clamp it with the seven clamps as shown above.

- 1. Disconnect the harness [13] if the harness of the punch unit has been connected to CN135 [12], and then connect the harness of the cooling fan unit to CN135 [12].
- 2. Attach the harness [13] of the punch unit to the relay connector [14] of the cooling fan harness.
- 3. Clamp the harness of the cooling fan unit with the seven clamps.

9. Reattach the rear cover of the finisher (x 2)

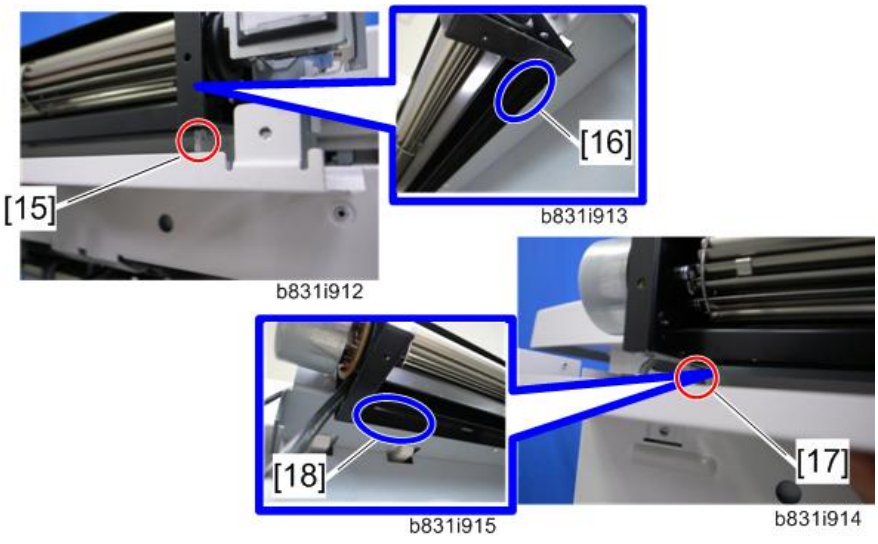

10. Align the front tab [15] on the lower cover with the groove [16] under the cooling fan unit, and align the rear tab [17] with the groove [18].

b831i911

11. Install the lower cover [19] under the cooling fan unit (x 2).

b831i916

b831i917

b831i918

12. Install the upper cover [20] in the cooling fan unit (x 7).
13. Turn on the mainframe.
14. Turn on the power switch [21] of the cooling fan unit.
15. Check the operation of the cooling fan unit.

Buffer Pass Unit Type 5000 (M379)

Accessory Check

Check the quantity and condition of the accessories in the box against the following list:

	Description	Qty
1.	Sponge Stripe	1
2.	Screw	4
3.	Leveling Shoes	4
4.	Rear Docking Bracket	1
5.	Front Docking Bracket	1
6.	Mylar	2*[1]
7.	Power Cord	1
-	Caution Decal for Multi Power Sources	1

*[1]: These items are used for the paper guide plate of the downstream peripheral.

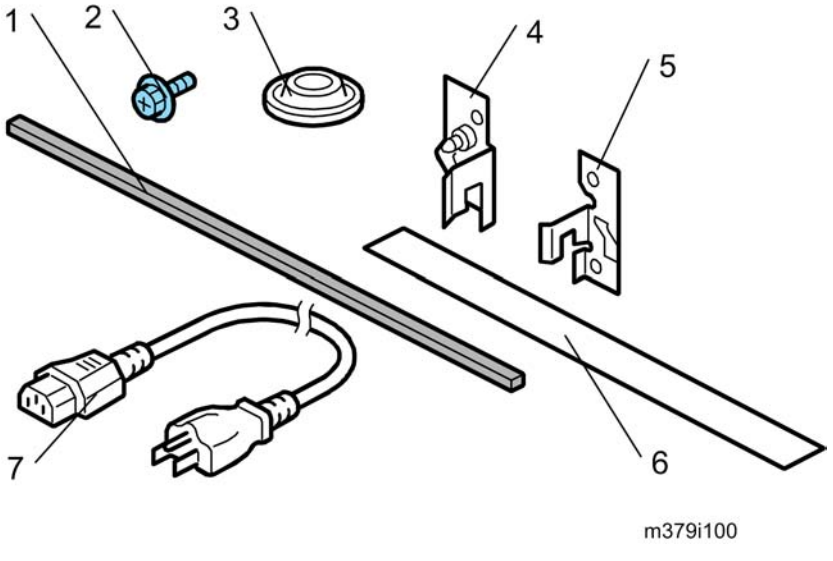

Installation

⚠CAUTION

- Disconnect the power cord from the inlet of the buffer pass unit and unplug the mainframe before starting the following procedure.
- Do not pull out the buffer pass unit drawer until this unit has been docked to the mainframe. Otherwise, the buffer pass unit can fall down.
- (☛page 58 "Correct Procedure to Turn Off the Power ")

Unpacking

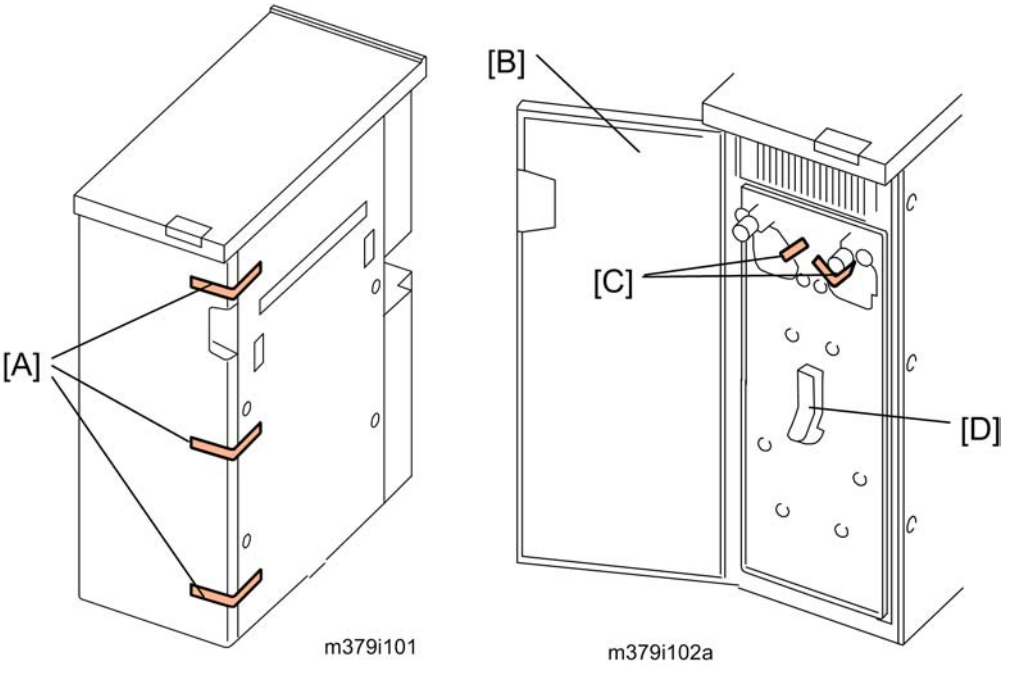

1. Remove all external tapes [A].
2. Open the front door [B] and remove all tapes [C].

   ### ⚠CAUTION

   - Do not pull out the buffer pass unit drawer [D] until this unit has been docked to the mainframe. Otherwise, the buffer pass unit can fall down.

Preparing for Docking

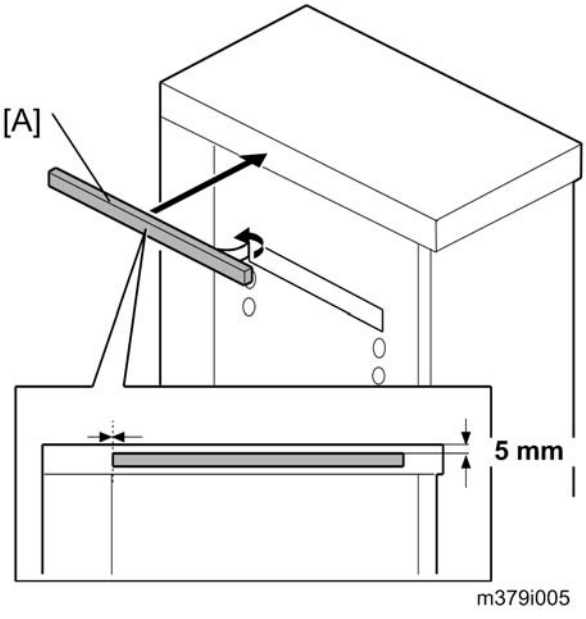

1. Remove the tape from the sponge stripe [A] and attach it to the buffer pass unit as shown above.

Docking the Buffer Pass Unit to the Mainframe

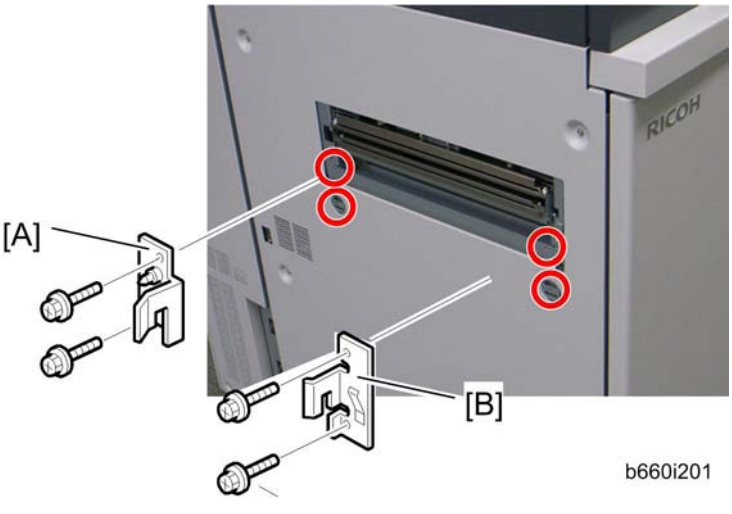

1. Attach the rear docking bracket [A] (x 2: M4x8).
2. Attach the front docking bracket [B] (x 2: M4x8).

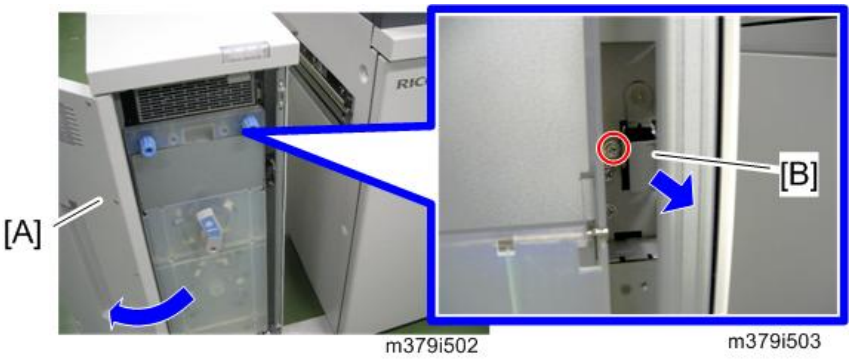

3. Open the front door [A].
4. Pull out the locking lever [B] (x 1).

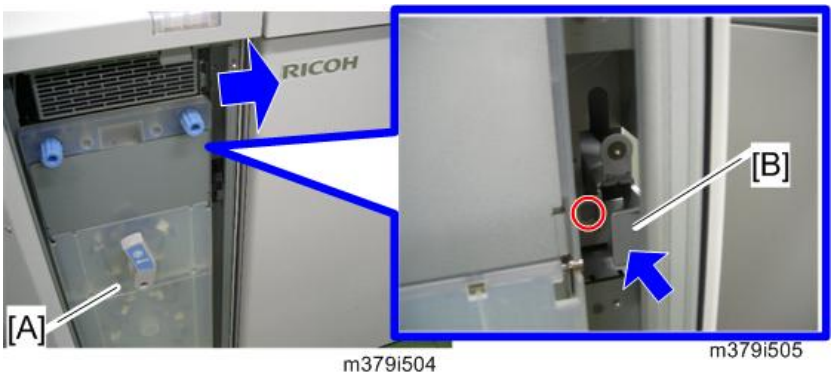

5. Dock the buffer pass unit [A] to the mainframe.
6. Push in the lock lever [B] and fasten it (x 1).

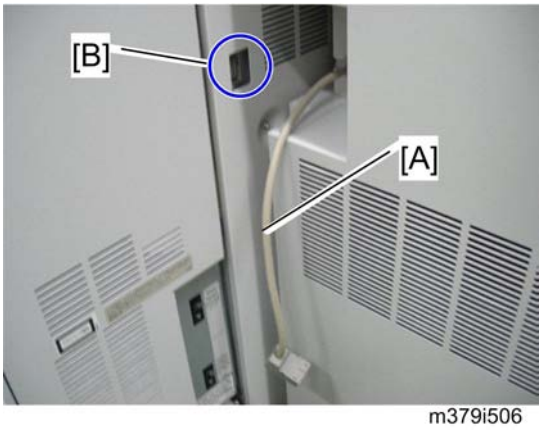

7. Connect the I/F cable [A] of the buffer pass unit to the socket [B] of the mainframe.
8. Connect the power cord to the buffer pass unit and connect the other end of the cord to a wall outlet.

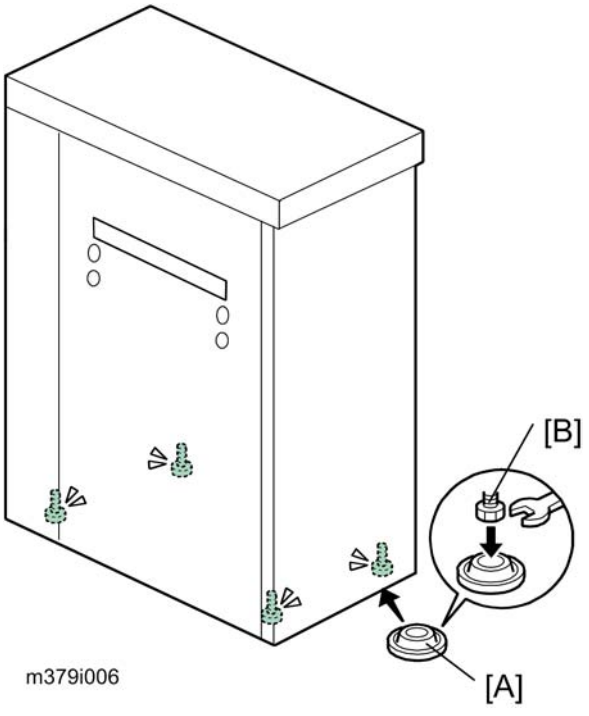

9. Set the leveling shoes (x4) under the feet of the buffer pass unit.
10. Use a wrench to turn the nut [B] at each foot until the machine is level.

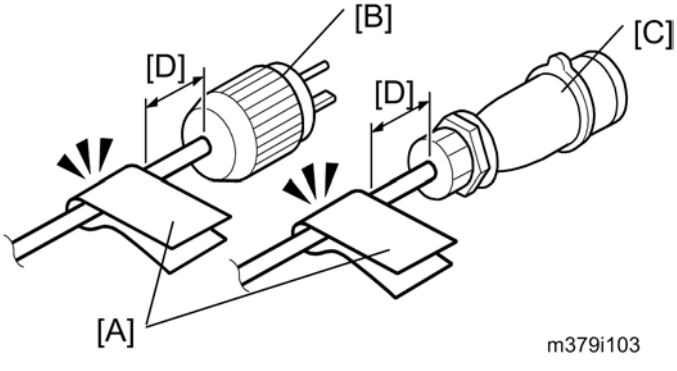

11. Attach the caution decal [A] for multi power sources to the power plug [B] (for NA) or [C] (for EU) of the mainframe.
    - The caution decal [A] must be attached approximately 30 mm [D] from the power plug end.

Removing the Shipping Brackets

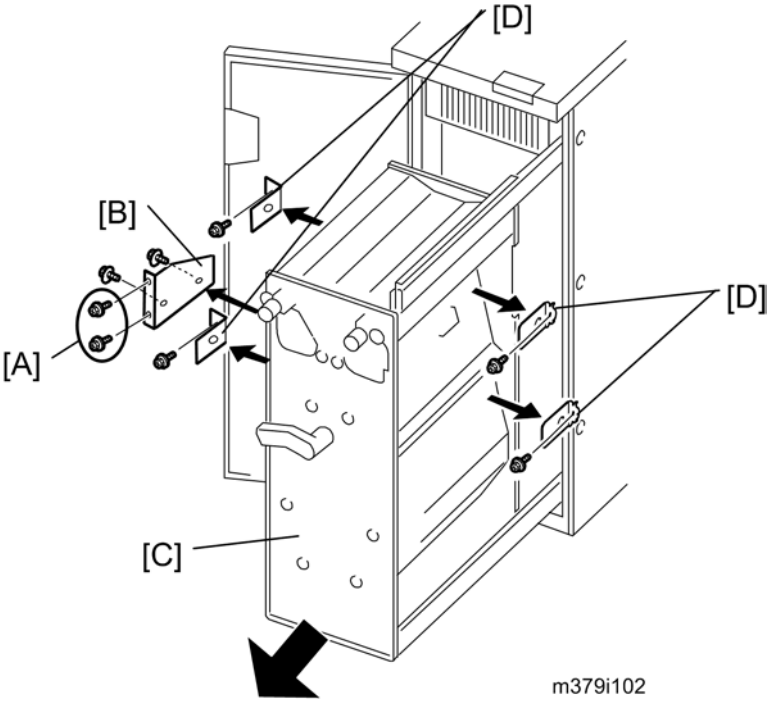

1. First remove two screws [A] on the clamp bracket [B].
2. Pull out the buffer pass unit drawer [C].
3. Remove the clamp bracket [B] (x 2).
4. Remove the four shipping brackets [D] (x 1 each).
5. Push in the buffer pass unit drawer [C].
6. Close the front door.

Connecting the Other Peripheral to the Buffer Pass Unit

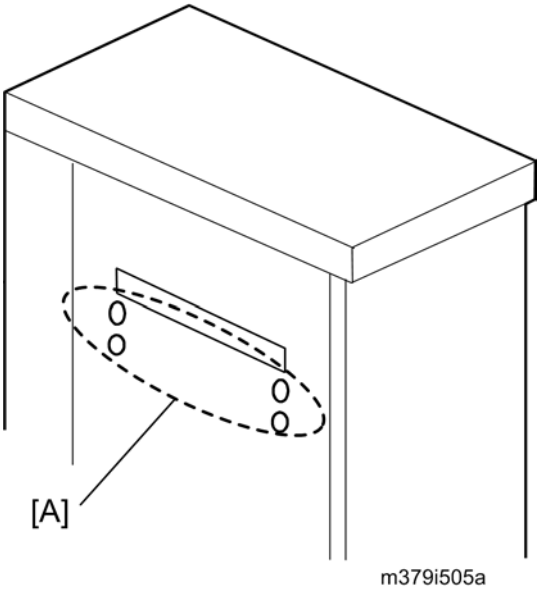

m379i505a

1. Attach the docking bracket (provided with a downstream peripheral) to the left side [A] of the buffer pass unit.

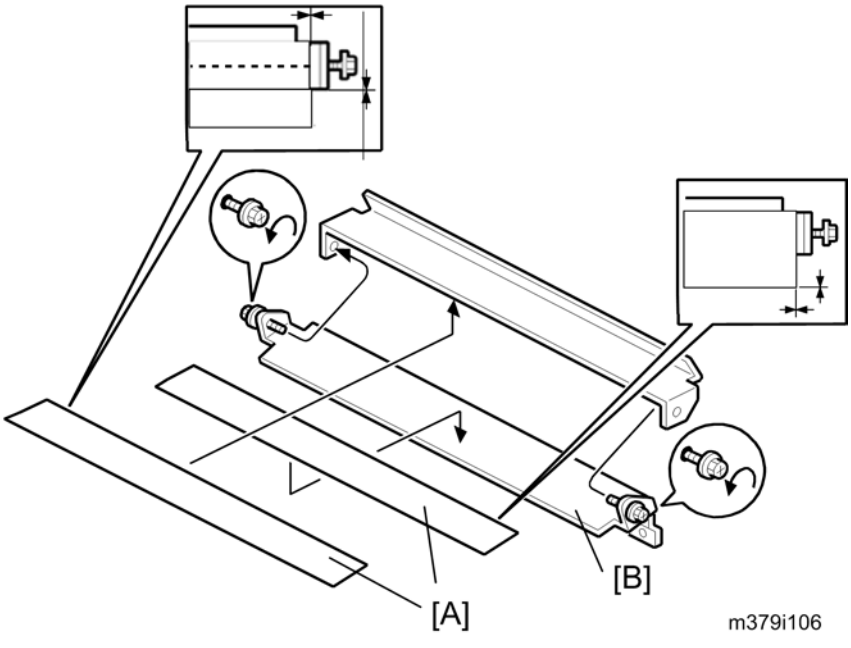

m379i106

2. Attach the mylars [A] to the entrance guide plate [B] of the next finishing device to be installed to the left of the buffer pass unit.

Important

- **Do not attach these mylars to the entrance guide plate of the buffer pass unit.**

3. Dock a peripheral to the buffer pass unit.

Fuser Unit Air Separator Type C901 (M390)

Accessory Check

No.	Description	Q'ty
1	Air Separator Cover	1
2	Air Separator Unit	1
3	Air Nozzle Unit	1
4	Screw: M4 x 8	4
5	Tapping Screw: M4 x 8	6
6	Pipe duct	1
7	Cushion	2

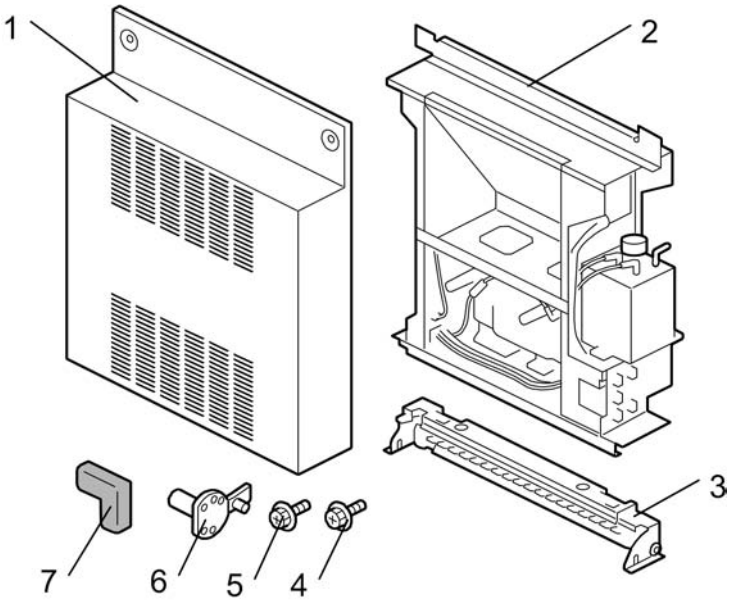

m390i100

Installation

Before Installation

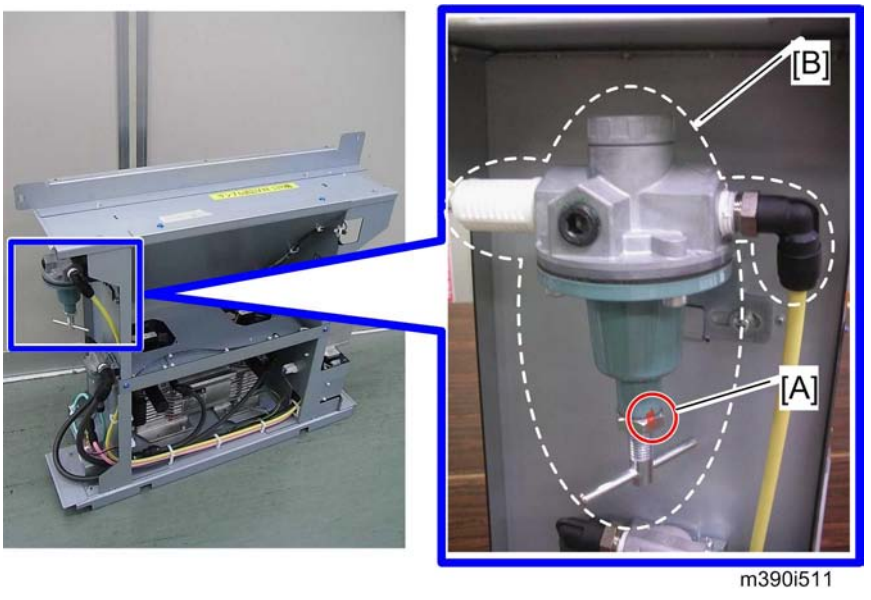

Check if the red paints [A] on the Valve: Pressure Sensor: Assembly [B] of the air separator unit face each other. If not, replace the Valve: Pressure Sensor: Assembly [B] with a new one.

⚠CAUTION

- Never move or rotate the Valve: Pressure Sensor: Assembly. It is because this assembly has been precisely adjusted at factory.
- If the Valve: Pressure Sensor: Assembly is moved or rotated, the function of the air separator unit does not operate properly.
- If the Valve: Pressure Sensor: Assembly is moved or rotated, the adjustment for the Valve: Pressure Sensor: Assembly cannot be done in the field. In this case, the Valve: Pressure Sensor: Assembly must be replaced with a new one.

Installation Procedure

⚠CAUTION

- Turn the machine power off and unplug it from the power source before starting the following procedure. (☛page 58 "Correct Procedure to Turn Off the Power ")

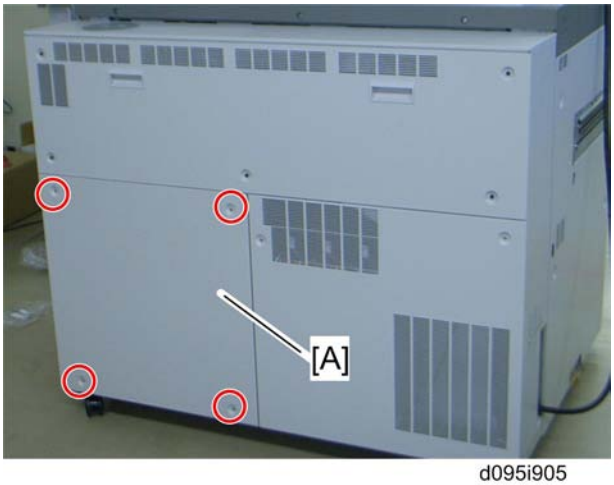

d095i905

1. Remove the rear lower right cover [A] (x 4).

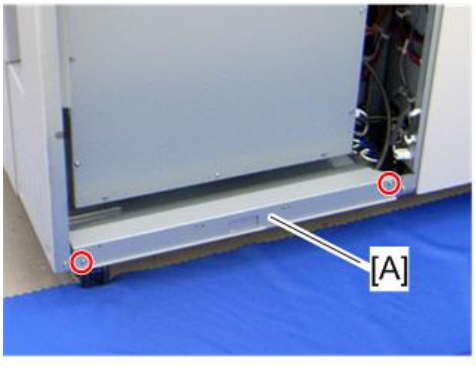

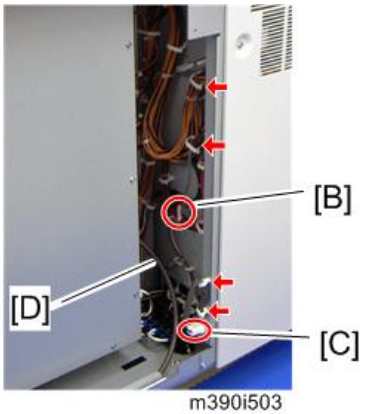

m390i503

2. Remove the bracket [A] (x 2).
3. Release the four clamps.
4. Take out the harness [B] and disconnect the power supply cable [C].
5. Take out the air tube [D] from the mainframe.

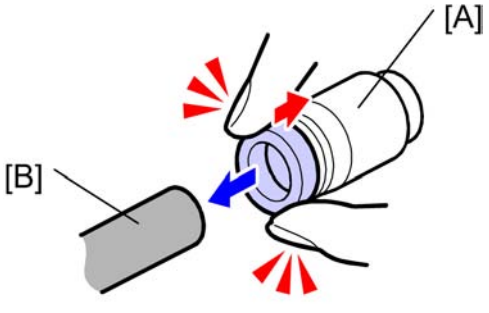

m390i201

6. Remove the tube cap [A] from the air tube [B] from the mainframe.
   - The air tube is mentioned in step 5.

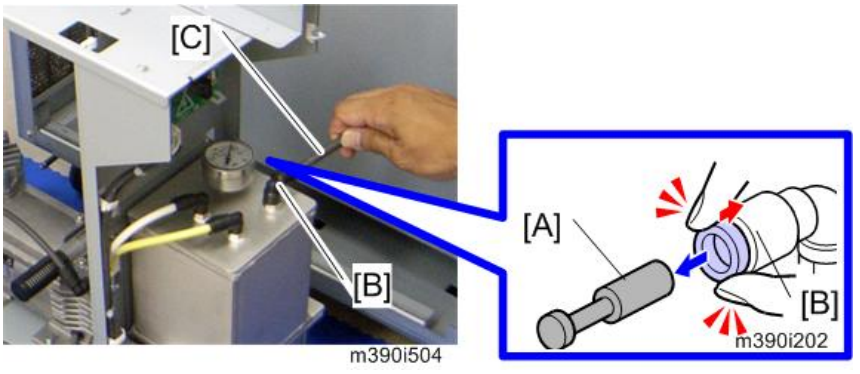

m390i504

7. Remove the joint cap [A] from the joint [B] on the air separator unit.
8. Connect the air tube [C] to the joint [B] on the air separator unit.
   - Make sure that air tube is firmly connected.

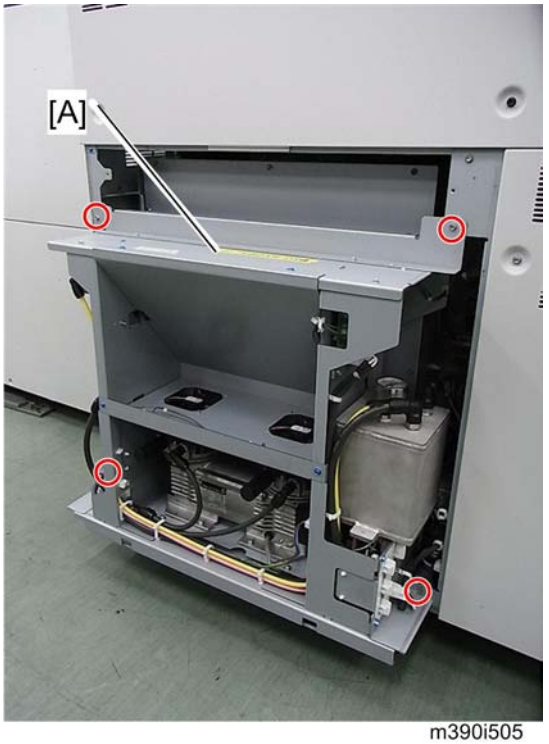

m390i505

9. Attach the air separator unit [A] to the mainframe (tapping screw; x 4).

CAUTION

- The air separator unit weighs approximately 20.5 kg (45.2 lb.). Two people are required to lift it or set it down.

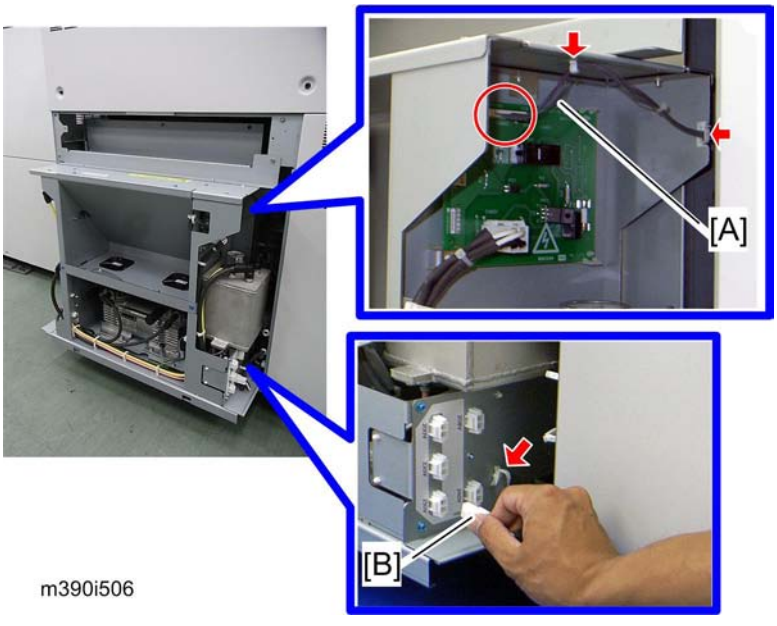

10. Connect the harness [A] to CN682 on the main board of the air separator unit (x 2).
11. Connect the power supply cable [B] to the required power connector on the air separator unit, and then clamp the power supply cable (x 1).
    - Consult with the customer about the voltage that is used on the customer site, and then connect the power supply cable to the required connector referring to the table below.

Voltage of the customer site	Proper connector
180 - 204V	200V
205 - 213V	208V
214 - 224V	220V
225 - 234V	230V
235 - 264V	240V

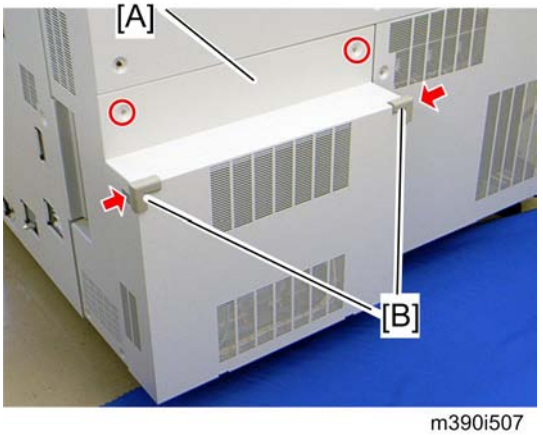

m390i507

12. Attach the air separator cover [A] to the mainframe (x 2).
13. Attach the cushions [B] to both corners of the air separator cover.
14. Open the front doors of the mainframe.

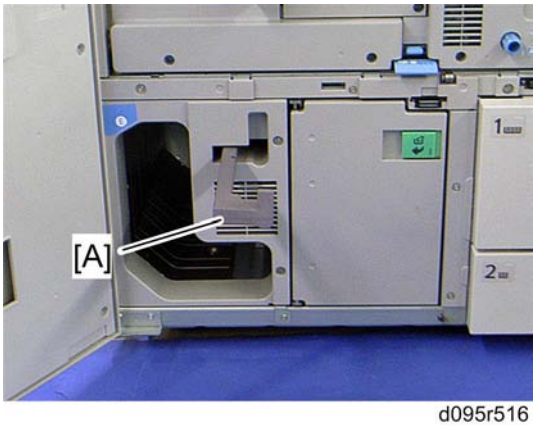

d095r516

15. Pull out the handle [A].

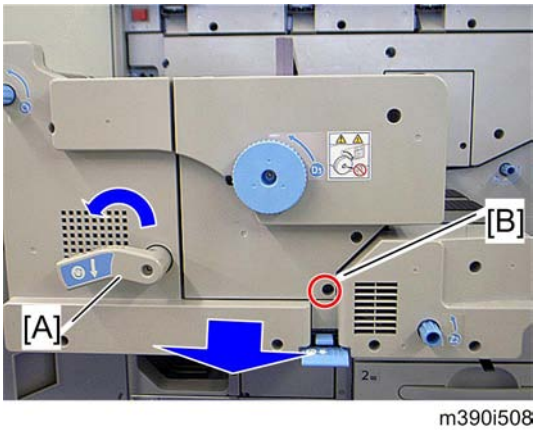

m390i508

16. Turn the lock lever [A] for the fusing unit drawer counterclockwise, and then pull out the fusing unit drawer.
17. Remove the screw [B]

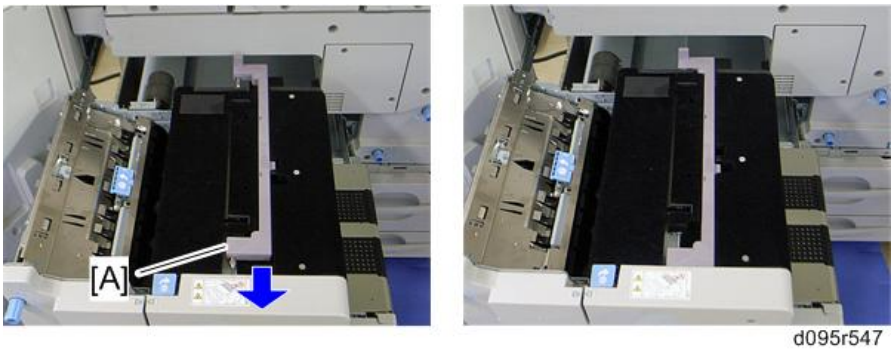

d095r547

18. Attach the handle [A] as shown above.

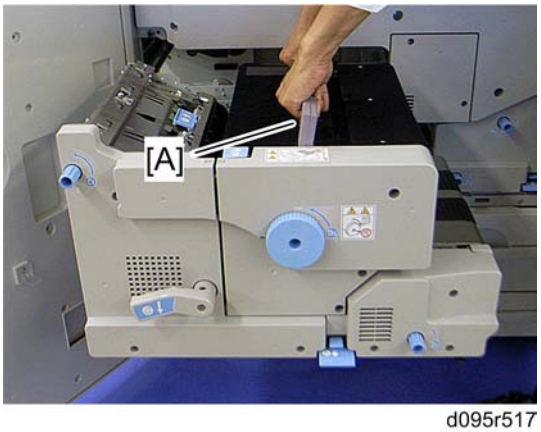

d095r517

19. Hold the handle [A], and then lift the fusing unit vertically.

⚠ CAUTION

- The fusing unit weighs approximately 29.2 kg (64.4 lb.). Handle it carefully when you lift it and set it down.

20. Place the fusing unit on a suitable sheet of paper, and then remove the handle.

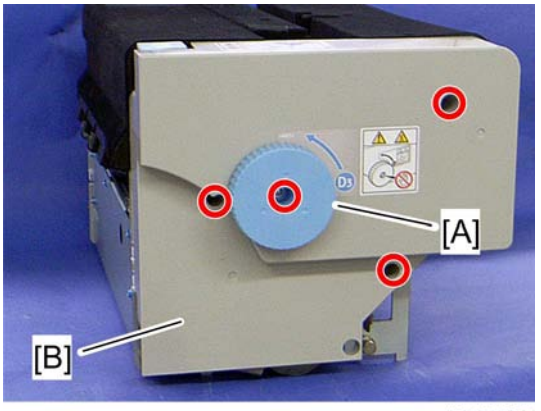

d095r555

21. Fusing knob [A] (x 1)
22. Fusing front cover [B] (x 3)

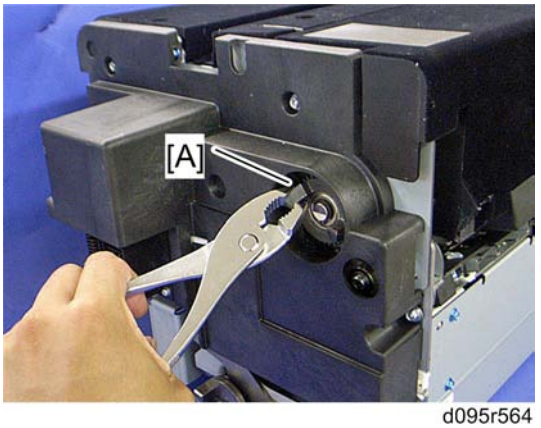

d095r564

Note

- If you cannot remove the fusing knob screw, hold the drive gear [A] with pliers and remove it.

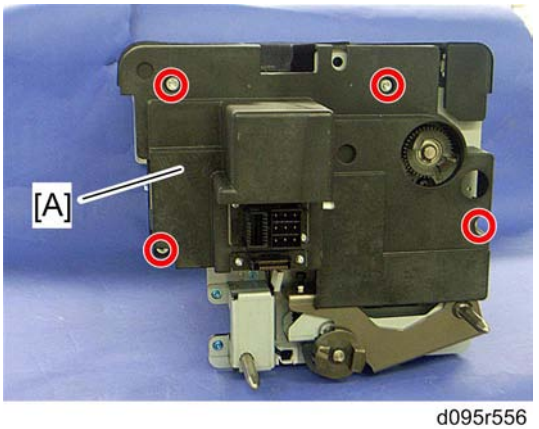

d095r556

23. Fusing rear cover [A] (x 4)

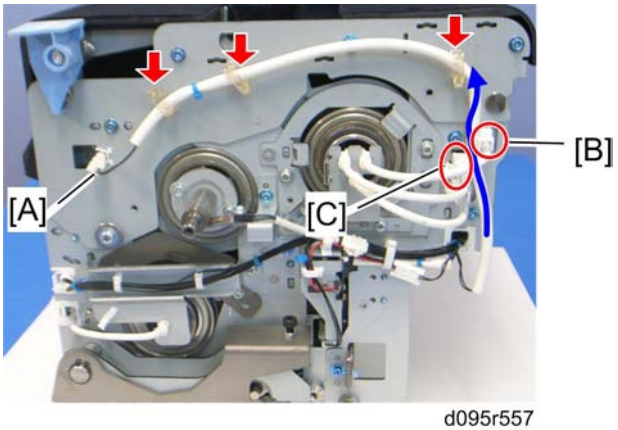

d095r557

24. Disconnect the connector [A] (x 3).
    - When rerouting the harness as shown above, route the harness between the connectors [B] and [C].

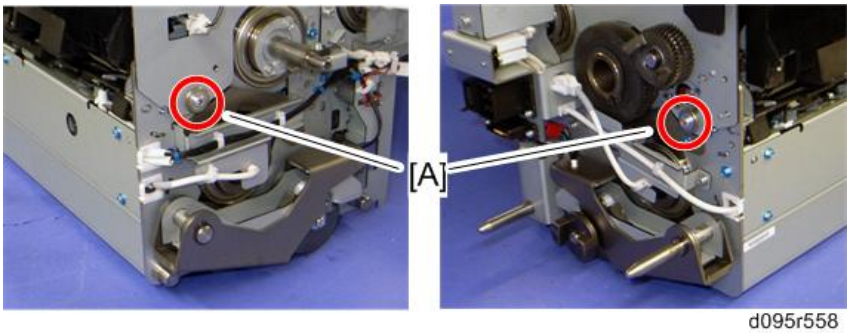

d095r558

25. Remove the positioning pins [A] (x 2)

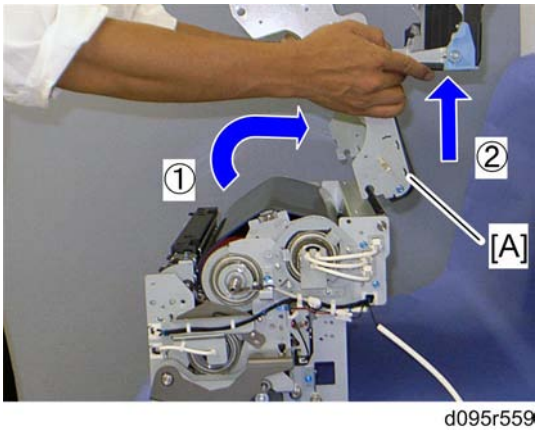

d095r559

26. Remove the fusing upper frame [A].

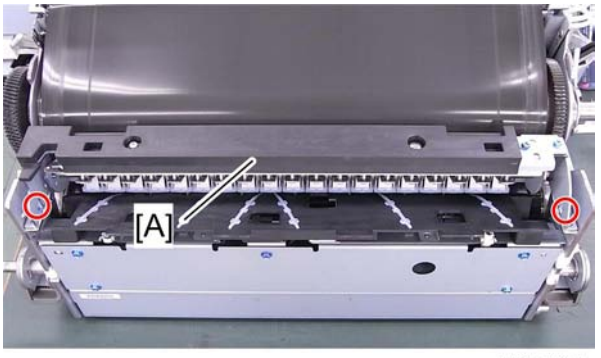

d095r537

27. Replace the fusing belt stripper plate [A] with the air nozzle unit in the accessories (x 2).

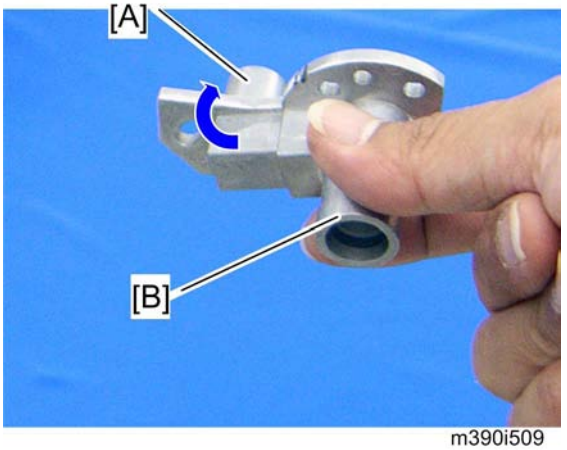

m390i509

28. Set the exhaust part [A] with the intake part [B] of the pipe duct facing the opposite direction.

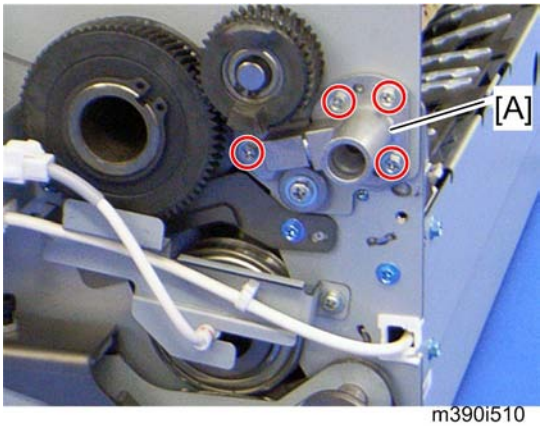

m390i510

29. Attach the pipe duct [A] to the rear frame of the fusing unit (x 4).
30. Reassemble the fusing unit.

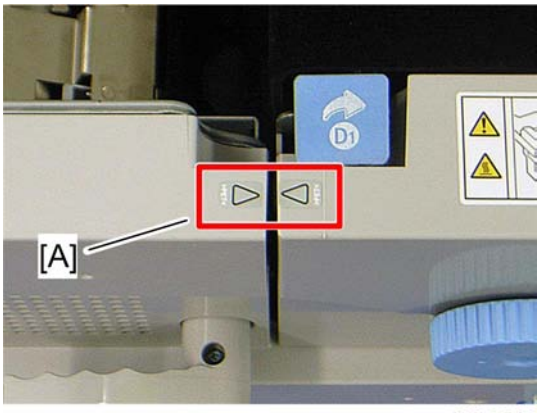

d095r518

31. Align the arrow decals [A] as shown above, and then set the fusing unit on the fusing unit drawer.
32. Push in the fusing unit drawer, and then close the front doors.
33. Plug in the mainframe, and then turn on the main power switch.
34. Enter the SP mode.
35. Set the setting of SP1901-201 from "OFF: 0" to "ON: 1".
36. Exit the SP mode.

Skew and Side-to-Side Adjustment

Skew and Side-to-Side Registration

Overview

The paper feed path is extremely long when many peripheral units are installed. In such a long path, the cumulative effect of paper skew or deviation in side-to-side registration may require adjustment.

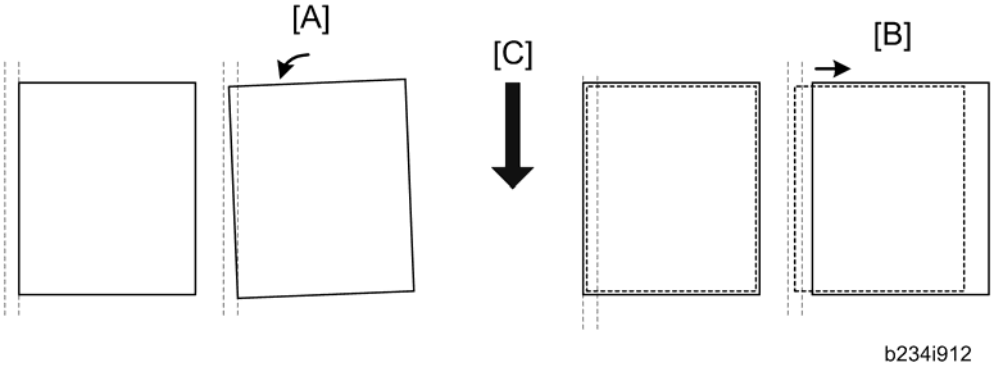

Skew [A] appears when the paper rotates away from the direction of paper feed. If side-to-side registration shifts [B], the sheet remains straight but shifts left or right away from center. ([C]: Feed Direction)

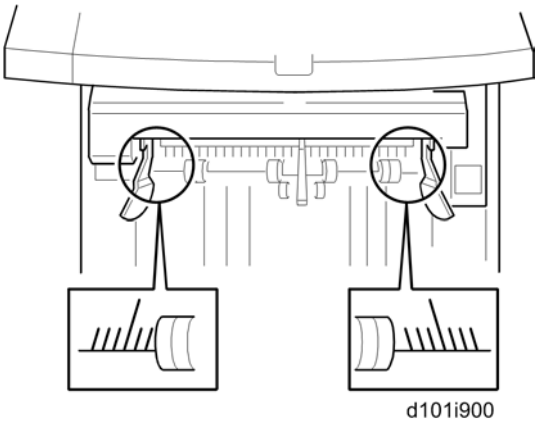

Skew and side-to-side registration are checked with graduated scales (shown above) where paper exits the units. The scales are provided so that you can visually check and measure the amount of skew or deviation in side-to-side registration.

A scale for detecting skew and checking side-to-side registration ("S-to-S") is provided on the following peripheral units.

Name	Skew	S-to-S	Comment
A4 LCIT (B832)	X*	O*	Side-to-side registration only; CIS adjustment
A3 LCIT (D532)	X	O	
Perfect Binder (D391)	O	O	Correction for both skew and side-to-side registration are possible.
Cover Interposer (B835)	O	O	
Ring Binder (D392)	O	O	
High Capacity Stacker (D447)	O	O	
Booklet Finisher (D434)	O	O	
Finisher (B830)	O	O	

*O: Adjustable, X: Not adjustable

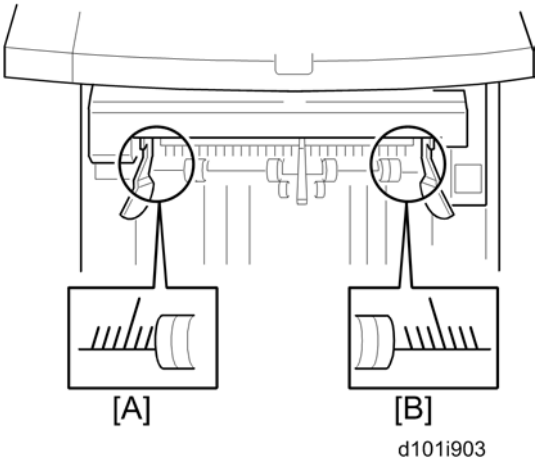

Use either the rear scale or front scale, depending on the type of paper used in your area:

- [A]: Rear: DLT SEF (LT LEF for Ring Binder (D392))
- [B]: Front: A3 SEF (A4 LEF for Ring Binder (D392))

The illustrations below show where the scale for each peripheral unit is located:

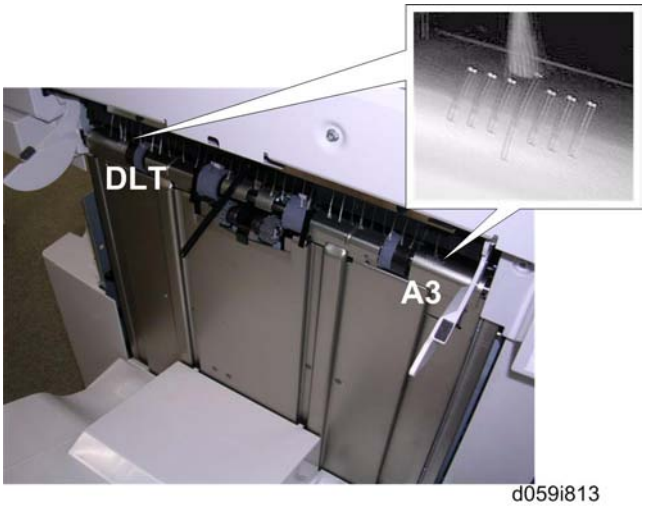

The illustration above shows the scale on the left side of the Booklet Finisher tray. The same scale is at approximately the same position (paper exit) for the following units:

- Ring Binder (D392): Left Exit
- High Capacity Stacker (D447): Proof Tray
- Booklet Finisher (D434): Shift Tray Exit

In the illustration below, the red lines indicate the joint brackets where adjustments are done to eliminate skew and to correct side-to-side registration.

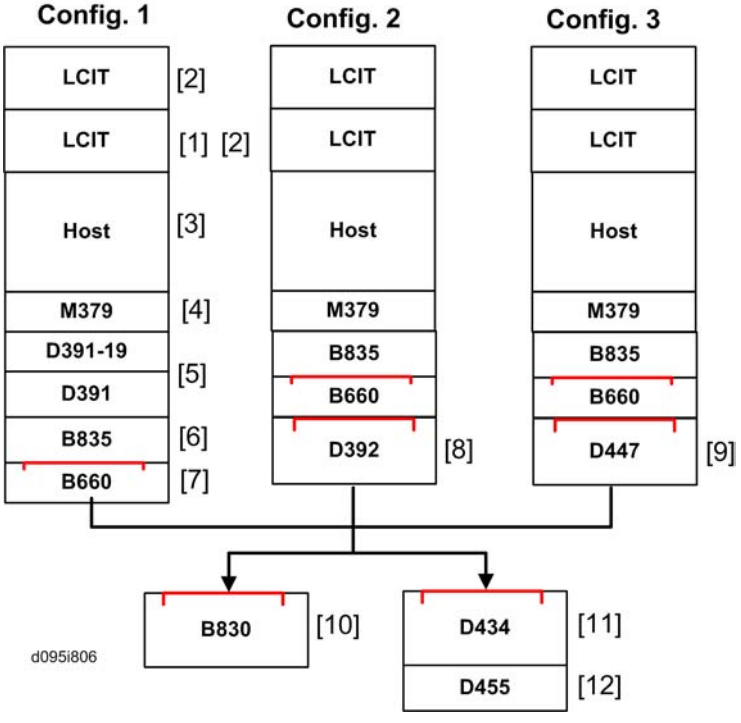

Here are some general rules for testing and adjusting for paper skew or a shift in side-to-side registration.

1. After installation of each peripheral device, do some test prints and check for the presence of skew, and check that side-to-side registration is correct.
   - [1]: A4 LCIT (B832)
   - [2]: A3 LCIT (D532)
   - [7]: Z-Folding Unit (B660)
   - [8]: Ring Binder (D392)
   - [9]: High Capacity Stacker (D447)
   - [10]: Finisher SR5000 (B830)
   - [11]: Booklet Finisher (D434)
2. If you detect a problem with skew or side-to-side registration, do the adjustment on the joint bracket attached to the peripheral unit **upstream of the unit where the problem occurred**.
3. There is no adjustable joint bracket upstream of the following peripheral units. No adjustment is possible upstream of these units:
   - [4]: Buffer Pass Unit Type 5000 (M379)
   - [5]: Perfect Binder (D391)
   - [6]: Cover Interposer (B835)

- [12]: Trimmer Unit TR5020 (D455-17)

4. Side-to-side registration is corrected by shifting the upstream joint bracket left or right.
5. Skew is eliminated by inserting spacers (shims) under the rear or front end of the joint bracket. These spacers are provided with the peripheral units, attached by screws to the units at the factory.

Checking Side-to-Side Registration

Do this procedure to confirm that the paper is centered in the paper path.

1. Make sure that the I/F cable of the unit is connected to the upstream unit.
2. Disconnect the unit to the left of the unit to be tested.
3. Execute a run by feeding paper from Tray 2 of the host machine.

Note

- If you are testing the Ring Binder (D392), execute the run by feeding paper (A4 or LT LEF) from Tray 2 of the host machine (punching only, no ring binding).
- Feed A3 SEF for other units.

4. When each sheet exits, check the position of the paper on the scale to see if the paper is centered.
   - Read the rear scale for DLT-size paper
   - Read the front scale for A3-size paper.
   - If you are testing the ring binder, read the rear scale for LT LEF paper and the front scale for A4 LEF paper. The paper does not exit. It will switch back and feed to the punch unit.
   - The scale lines are spaced 2 mm apart.
5. The paper must not deviate more than ±2 mm on the scale.

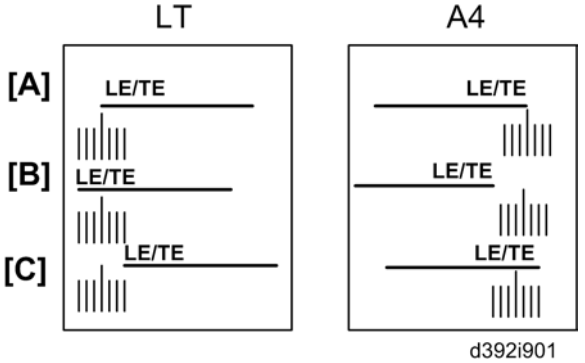

d392i901

[A]	Leading/trailing edges centered. No adjustment necessary.
[B]	Leading/trailing edges offset to the rear by more than 2 mm. Adjustment required.
[C]	Leading/trailing edges offset to the front by more than 2 mm. Adjustment required.

If the edge of the paper is on the scale at the center [A], no adjustment is required.

-or-

If the edge of the paper is ±2 mm off the center line on the scale, adjustment is required. Do the procedure in the next section.

Correcting Side-to-Side Registration

1. Disconnect the peripheral unit from the upstream unit.

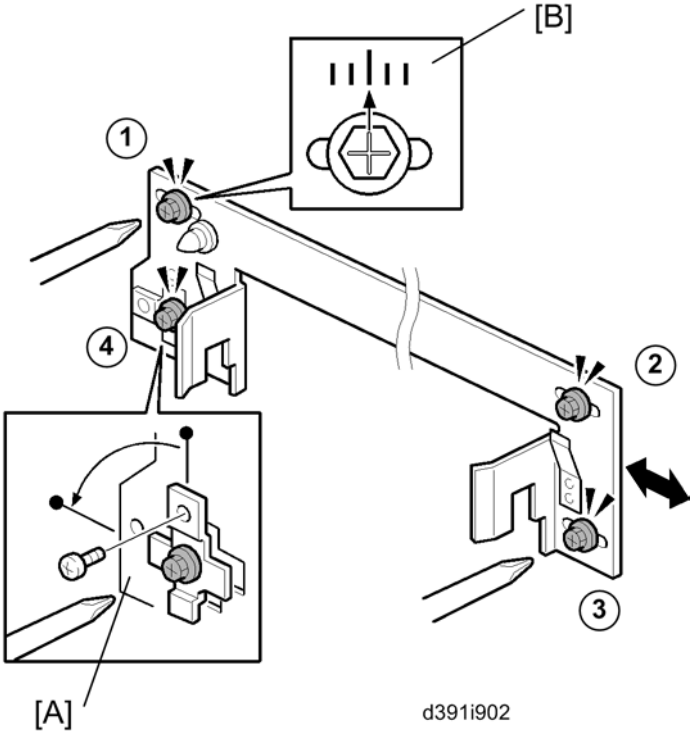

2. On the joint bracket attached to the upstream unit, loosen screws ①, ②, ③, and ④.
3. Remove bracket [A] (x1), rotate it 90 degrees, and re-fasten the screw. Changing the position of this bracket aligns the oval cut-out horizontally and frees the joint bracket so it can slide from side to side.
4. Look at the scale [B].
5. Slide the bracket to the left or right and tighten the screw.
6. If the deviation from center was toward the front, slide the bracket to the rear and tighten the screw ①.

   -or-

   If the deviation from center was toward the rear, side the bracket to the front and tighten the screw ①.

7. Tighten screws ②, ③, and ④
8. Do another test run, so that you can check the results of the adjustment.

To Correct Side-to-Side Registration for B660 and B835

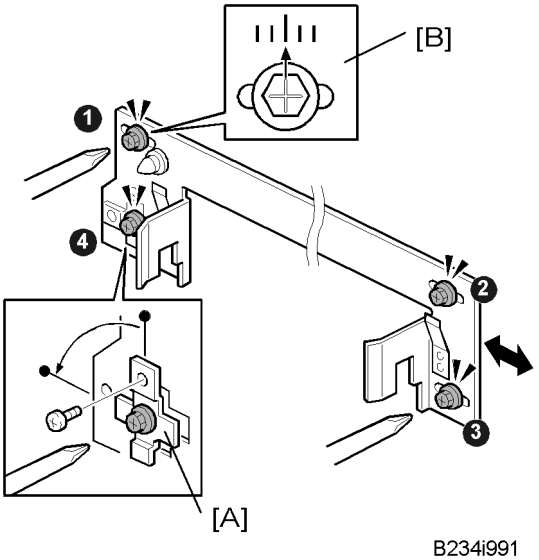

B234i991

Important

- **This adjustment can be done on the left side of the mainframe, at the Z-Folding unit B660 and at the cover interposer tray B835.**

1. Loosen screws (❶, ❷, ❸, ❹).
2. Remove the bracket [A] (x 1), rotate it 90 degrees, then refasten it.

   Note

   - Re-positioning the bracket aligns the oval cut-out horizontally so that you can slide the joint bracket to slide from side-to-side.

3. Use the scale [B] at the top of the rear end of the bracket.

   Note

   - Scale : 2mm

   If the deviation from center was toward the front of the machine, slide the bracket to the front and fasten it with the screw.

   -or-

   If the deviation from center was toward the back of the machine, slide the bracket to the rear and fasten it with the screw.

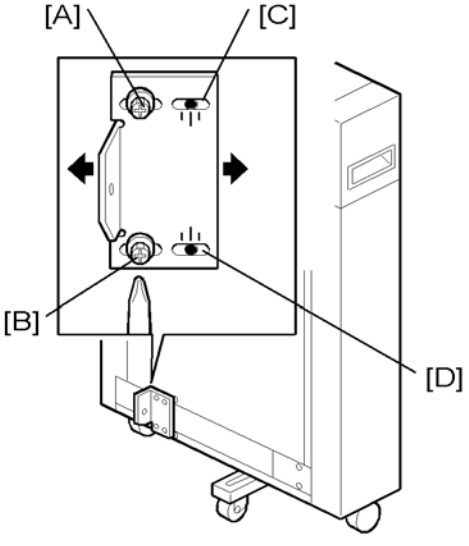

B660i004

If you are doing this adjustment on the side of the Z-Folding unit:

- At the base of the unit, loosen screws [A] and [B].
- Slide the plate left or right.
- Move the plate on the scales [C] and [D] by the same amount as the adjustment done above on the long bracket.
- Retighten the screws.

4. Do some more test prints and repeat the adjustment until it is correct.

Detecting Paper Skew

Do this check to detect the presence of skew in the paper path.

1. Make sure that the I/F cable of the unit is connected to the upstream unit.
2. If a peripheral unit is connected on the left side, disconnect it and pull it away.
3. Execute a straight-through run.
4. Check the scale where each sheet exits.
    - The rear scale is for DLT-size paper.
    - The front scale [2] is for A3-size paper.
    - Be sure to read the correct scale for the paper size in use.

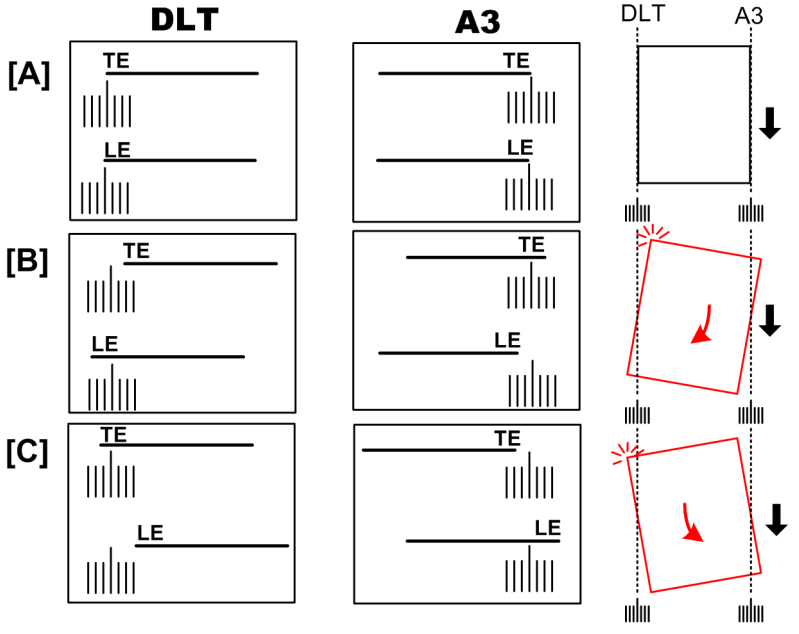

d392i904

[A]	Centered. No adjustment necessary.
[B]	Trailing edge skew to the front, total skew more than ±2 mm. Adjustment required.
[C]	Trailing edge skew to the rear, total skew more than ±2 mm. Adjustment required.

Correcting Skew

1. Disconnect the peripheral unit from the upstream unit.
2. Locate and remove the spacers from the peripheral unit where the problem occurred.

Locating and Removing Spacers

The photos below show where you can find the spacers for each unit.

Ring Binder (D392)

d059i816

1. Look at the right side.
2. Remove the spacers (x2).

High Capacity Stacker (D447)

d059i817

1. Open the front door.
2. Remove the right lock hasp [A] (x2).
3. Remove right front cover [B] (x2).
4. Remove the spacers (x1).

Booklet Finisher (D434)

d059i818

1. Open the front door (x1).
2. Remove the spacers (x1).

Finisher SR5000 (B830)

d059i819

1. Look at the right side (x1).
2. Remove the spacers (x1).

Inserting Spacers

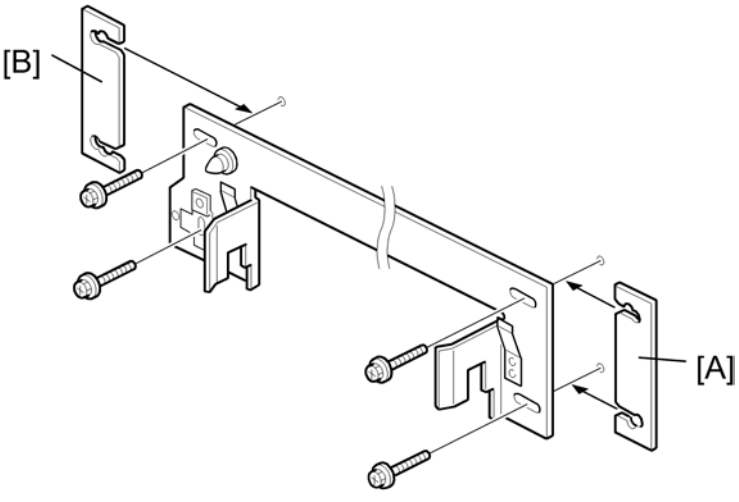

1. Loosen the screws (x4) of the joint bracket attached to the peripheral upstream of the unit where the problem occurred.
2. Insert a spacer and tighten the screws.

   If the trailing edge of the paper is **skewing toward the front** of the machine, insert a spacer [A] under the **rear end of the bracket** and tighten the screws.

   -or-

   If the trailing edge is **skewing toward the rear** of the machine, insert a spacer [B] under the **front end of the bracket** and tighten the screws.
3. Do another run to check the adjustment. If skew is still present, insert another spacer.
   - Each spacer is 2 mm thick.
   - Only two spacers are provided, so the maximum adjustment is 4 mm (using two spacers).

Optional Counter Interface Unit Type A (B870)

Component List

	Description	Qt'y
1	Optional Counter Interface Board	1
2	Screw: M3x6	4
3	Band	1
4	Stud	4
5	Edge Clamp	1
6	Harness	1

Installation

1. Open the rear controller box (page 354).

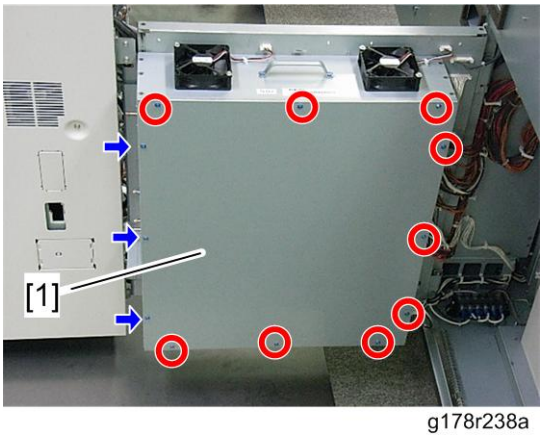

g178r238a

2. Controller box cover [1] (x 12)

Note

- Loosen the screws shown above by arrows. It is not necessary to remove them.

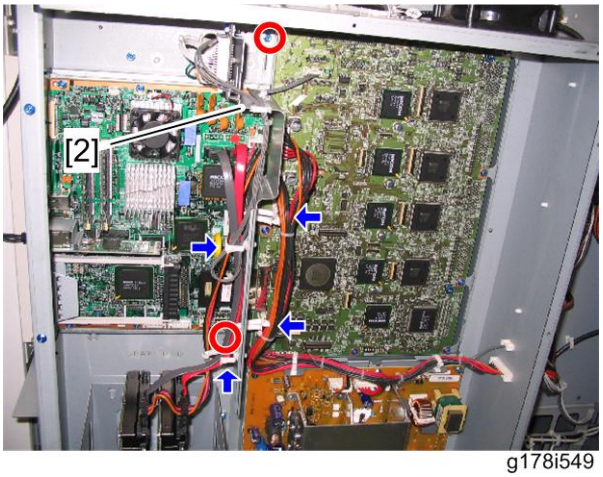

g178i549

3. Remove the controller box stay [2] (x 2, x 4).

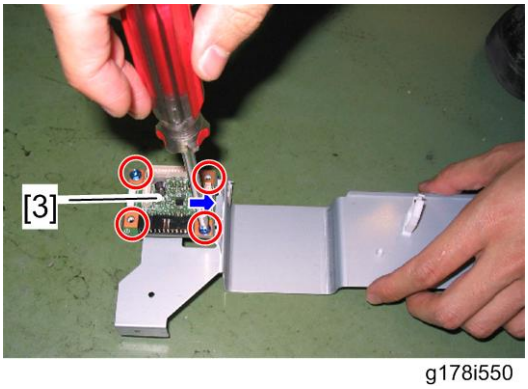

g178i550

4. Attach the optional counter interface board [3] to the controller box stay (x 4: M3x6).

g178i551

5. Remove the cover [4] of the optional counter I/F on the right cover of the machine.

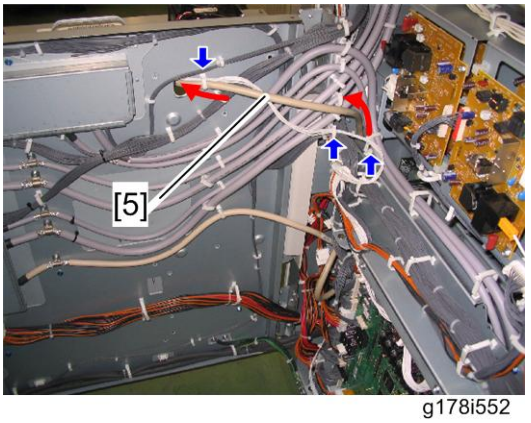

g178i552

6. Route the cable [5] from the counter device (x 3).

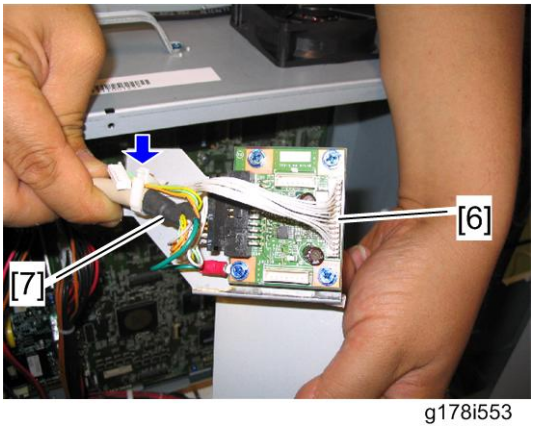

g178i553

7. Connect the harness [6] to CN3 and the cable [7] from the counter device to CN1 on the optional counter interface board (x 1).

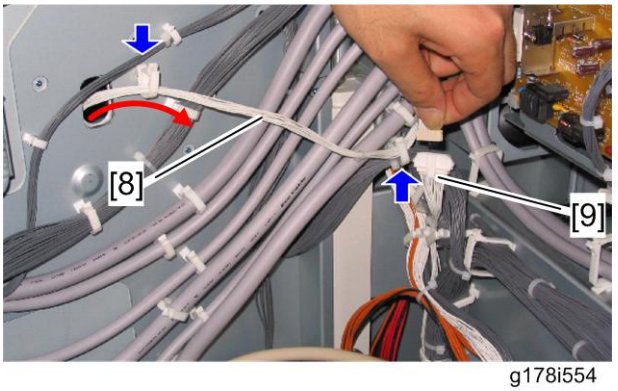

g178i554

8. Route the harness [8] from the optional counter interface board and then connect it to the relay harness [9] from the IOB (x 2).
9. Reattach the controller box cover (x 12).

10. Close the rear controller box (☛page 354).

MFP Option

VM Card Type F (D377-04): D095 only

The VM card application cannot be moved to another SD card. However, other applications can be moved onto the VM card.

Installation Procedure

1. Turn off the machine.

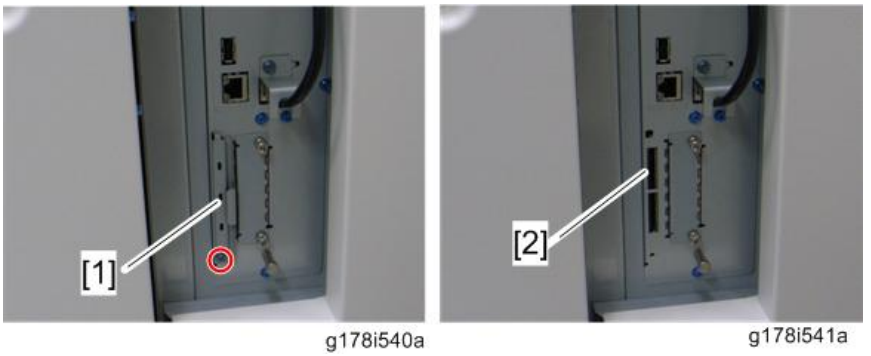

g178i540a g178i541a

2. Remove the SD card slot cover [1] (x1).
3. Turn the SD-card label face [2] to the rear of the machine. Then push it slowly into slot 2 (upper slot) until you hear a click.
4. Reattach the SD card slot cover.
5. Switch the machine on.

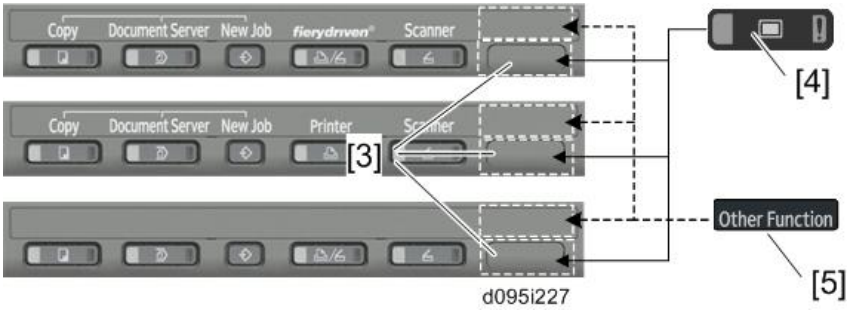

d095i227

6. On the operation panel, remove the bottom blank keytop [3] and replace it with the keytop provided [4].
7. For NA and AA models, attach the decal [5] to the copier.

3. Preventive Maintenance

PM Counter

The PM Counter main menu and submenu allows you to review the PM counts for both units and individual components.

This machine can be maintained with PM parts replacement by a service engineer or TCRU replacement by a trained customer. If TCRU replacement is done, the same PM counter is also reset automatically. (For example: If the "Y PCU Drum Unit" is replaced by TCRU replacement, the PM counter for the "Y PCU Drum Unit" is reset). For details about TCRU, see the "Replacement Guide: TCRU (for Pro C901S D095 or Pro C901 M077)".

Note

- The PM counter is counted double even if "A3/DLT Double Account" (SSP5-104-001) is set to "0" (single click) for A3/DLT paper printing.

Initializing PM Parts

Some adjustments for new PM parts are automatically done after the PM counters are reset. The list below shows what is automatically done after each PM counter reset.

PM Counter	Automatic Adjustment	
Y/M/C/Bk PCU Developer	• TD Sensor Initializing • Process Control	
Y/M/C/Bk PCU Drum	• Process Control • MUSIC	
Charge Corona Unit: Y/M/C/Bk	• Charge Unit Cleaning • Process Control	
Image Transfer Roller: Y/M/C/Bk	• Image Transfer Bias Correction • Process Control • MUSIC	
Image Transfer Belt	• Image Transfer Bias Correction • Process Control • MUSIC	Note

PM Counter	Automatic Adjustment	
ITB Bias Roller	• Paper Transfer Bias Correction • Process Control • MUSIC	
PTR Unit	• Paper Transfer Bias Correction • Process Control • MUSIC	
• Paper Transfer Roller	☛ page 500 "Paper Transfer Roller"	
• PTR Cleaning Brush Roller	☛ page 502 "PTR Cleaning Brush Roller"	
• PTR Lubricant Brush Roller	☛ page 498 "PTR Lubricant Brush Roller"	
• PTR Cleaning Blade	☛ page 501 "PTR Cleaning Blade"	
• PTR Lubricant Bar	☛ page 497 "PTR Lubricant Bar"	
• PTR Discharge Plate	☛ page 499 "PTR Discharge Plate"	
Fusing Unit		
• Hot Roller	☛ page 545 "Hot Roller and Heating Roller"	
• Fusing Belt	☛ page 544 "Fusing Belt"	
• Pressure Roller	☛ page 555 "Pressure Roller"	
• Heating Roller Therimistor	☛ page 546 "Heating Roller Thermistor"	
• Pressure Roller Thermistor	☛ page 556 "Pressure Roller Thermostat"	
• Web Cleaning Unit	☛ page 528 "Cleaning Web"	

Note

- Before resetting the PM counter for the image transfer belt, another adjustment must be done. For details, see Image Transfer Belt in the chapter "Replacement and Adjustment".

Displaying the PM Counter

1. Enter the SP mode.

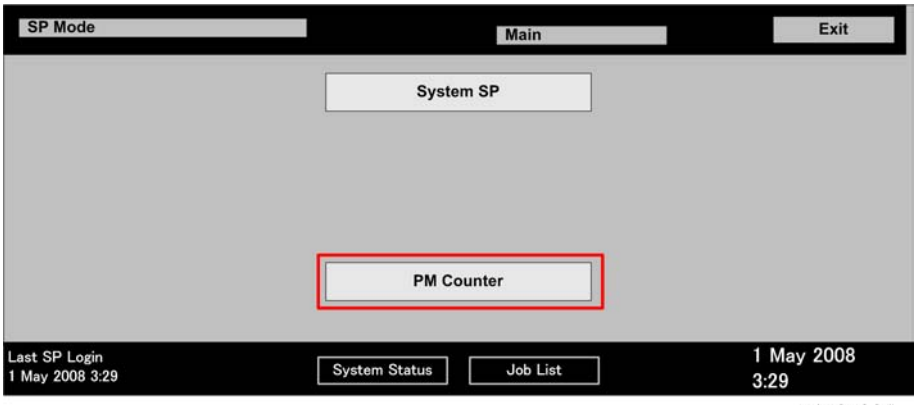

g178p901

2. Touch [PM Counter].

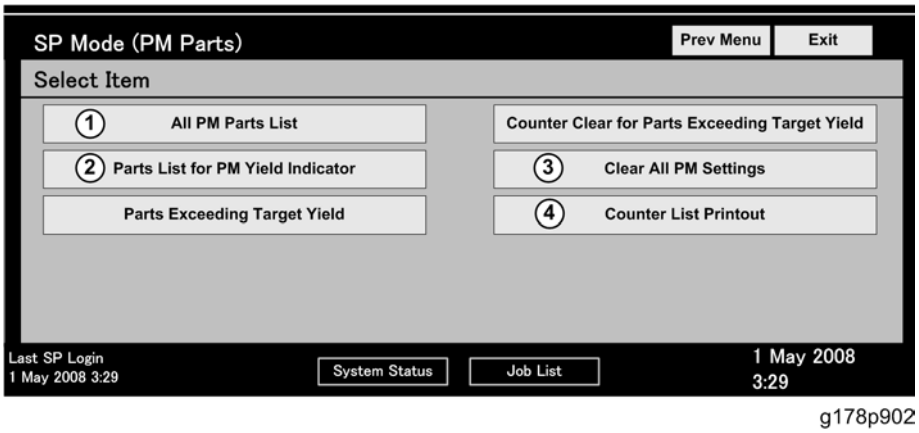

g178p902

①: **All PM Parts List.** Displays all PM items (all PM items, not only PM units). Lists all PM items regardless of PM yield indicator settings.

②: **Parts list for PM yield indicator.** Displays the items that have their PM yield indicator settings set to "Yes".

③: **Clear all PM settings.** Resets all PM counter settings to "0" at the same time. PM items can be reset one by one with the [Clear] button.

④: **Counter list print out.** Prints the PM counter on paper.

PM Parts Screen Details

All PM Parts list: Main Menu

The "All PM Parts list" displays all PM units and individual items. This list shows all PM items, regardless of their "PM yield indicator settings". (☛ Number button submenu)

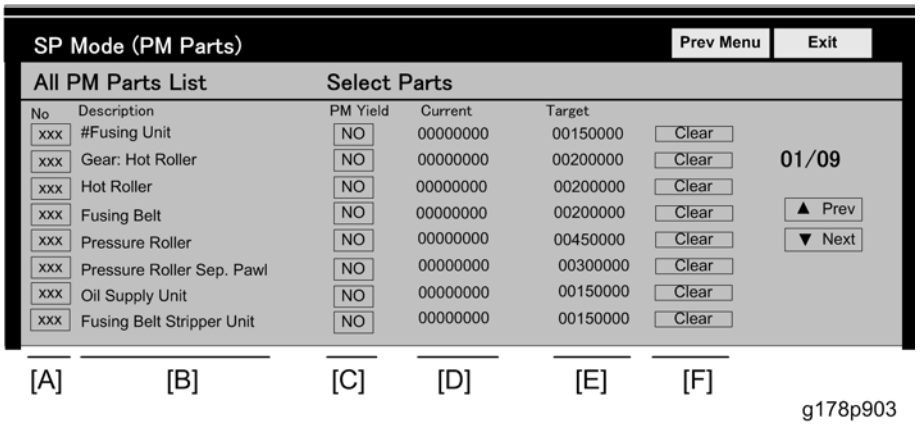

[A]	Number buttons. Pressing a number button opens a submenu. (☛ Number button submenu)
[B]	Descriptions. The # mark denotes a "unit" (not individual item).
[C]	PM yield buttons. Function is the same as the "PM yield indicator settings" button.
[D]	Current PM counter value.
[E]	Target PM interval. This can be changed by pressing a number button [A].
[F]	PM counter clear button. Function is the same as the [Clear current counter] button.

Number button submenu

Press any number button to open the submenu for a part. In the example below, the number button [xxx] "Fusing Unit#" was pressed.

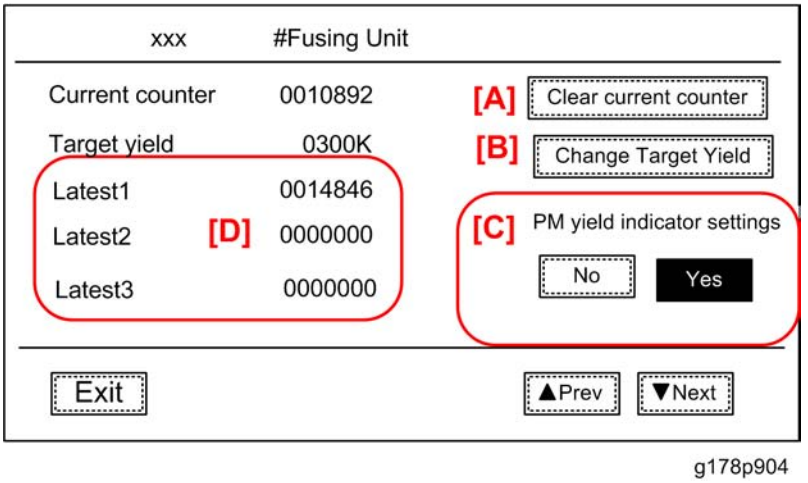

[A]: **Clear current counter.** Press to reset the selected PM counter (in this example [xxx] #Fusing Unit) to "0". You can also clear the settings by pressing the [Clear] button on the right side of the PM Counter Main Menu ([F] in the previous section).

[B]: **Change target yield.** Press the change the target PM yield. To change the setting:

- Press [Change target yield]
- Enter the number for the new target with the 10-key pad.
- Press [#] on the operation panel.

[C]: **PM yield indicator settings**. [Yes] is the default. Press [No] to remove the current item from the "Parts list for PM yield indicator".

- When set to "Yes", items marked with the # mark (# = a unit) will not have their individual items
- When set to "No", items marked with the # mark (# = a unit) only the individual components will appear in the list (the units will not appear).

[D]: **PM counter history**. This is a summary of the most recent counts

- Latest 1. The latest PM count since the unit (or part) was replaced.
- Latest 2. The previous PM count since the unit (or part) was replaced.
- Latest 3. The previous but one PM count since the unit (or part) was replaced.

Parts list for PM yield indicator

This list shows the PM Parts Main Menu with only items set to "Yes".

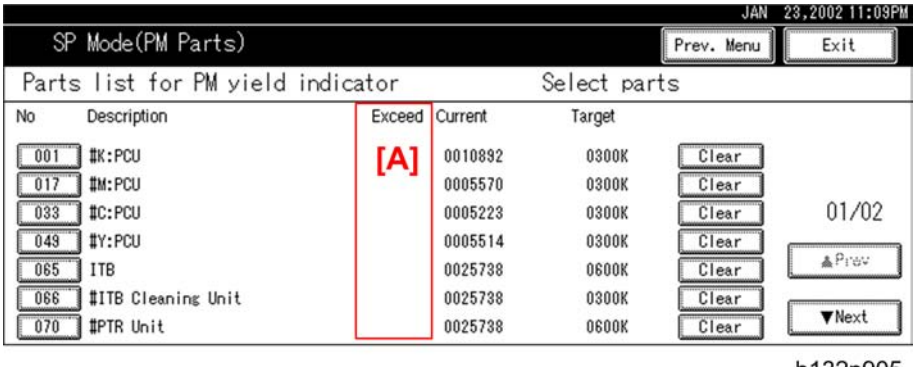

b132p905

Note:

- The # mark denotes a unit.
- Items without the # (065 ITB) denote individual components.
- An asterisk (*) will appear in the Exceed column [A] to show items that have exceeded their target PM yields.

PM Tables

See "Appendices" for the following information:

- Preventive Maintenance Items

4. Replacement and Adjustment

General Cautions

Important

- This machine has a Fiery controller (server type). The Fiery controller must be shut down before turning off the power supply to the Fiery controller. Therefore, turn off the Fiery controller first at the operation panel before turning off the main power switch of the machine. (page 58 "Correct Procedure to Turn Off the Power ")
- Never switch off either power switch while any of the electrical components are operating. Doing so might cause damage to units such as the transfer belt, drum, and development unit when they are pulled out of or put back into the copier.

Rear Controller Box

This machine has four fans for four PCDUs in the rear controller box. These fans can exhaust ozone and other dust and gases (NOx etc) from the machine.

Therefore, if you service the machine with the rear controller box open and check the printing operation, dust and gases (NOx) can adhere to the OPC drums. This may cause an image problem on the outputs (for example, white block pattern). Normally, process control can solve this problem. However, if you want to recover the print quality as soon as possible, print several sheets with solid color image (high coverage image).

Drum

An organic photoconductor (OPC) drums are more sensitive to light and ammonia gas than a selenium drum. Follow the cautions below when handling an OPC drum.

1. Never expose a drum to direct sunlight.
2. Never expose a drum to direct light of more than 1,000 Lux for more than a minute.
3. Never touch a drum surface with bare hands. If the drum surface is touched with a finger or becomes dirty, wipe it with a dry cloth or clean it with wet cotton. Wipe with a dry cloth after cleaning with wet cotton.
4. Never use alcohol to clean the drum (alcohol dissolves the drum surface).
5. Store drums in a cool, dry place away from heat.
6. Take care not to scratch the drum as the drum layer is thin and is easily damaged.
7. Never expose a drum to corrosive gases such as ammonia gas.
8. Dispose of used drums in accordance with local regulations.

PCDU

1. To prevent drum scratches, remove the charge corona unit before pulling out the drum.
2. The Y, M, and C charge corona unit should always be replaced together as a set.

Image Transfer Belt Unit

1. Never touch the image transfer belt surface with bare hands.
2. Take care not to scratch the image transfer belt, as the surface is easily damaged.
3. Before installing a new image transfer belt, clean all the rollers and the inner part of the ITB unit with a dry cloth to prevent the belt from slipping.

Scanner Unit (D095 only)

1. When installing a new exposure glass, make sure that the white paint mark is at the rear left corner.
2. Clean the exposure glass with alcohol or glass cleaner to reduce the amount of static electricity on the glass surface.
3. Use a cotton pad with water or a blower brush to clean the mirrors and lenses.
4. Never bend or crease the exposure lamp cables.
5. Never disassemble the lens unit. Doing so will throw the lens and the copy image out of focus.
6. Never adjust any CCD positioning screw. Doing so will throw the CCD out of position.

Laser Unit

1. Never loosen the screws that secure the LD drive board to the laser diode casing. Doing so would throw the LD unit out of adjustment.
2. Never adjust the variable resistors on the LD unit, as they are adjusted in the factory.
3. Never open the polygon motor cover. The polygon mirror and lenses are sensitive to dust.
4. Never touch the glass surface of the polygon mirror motor unit with bare hands.

Development

1. Avoid nicking or scratching the development roller.
2. Place a development unit on a sheet of paper after removing it.
3. Always clean the drive gears after removing used developer.

4. Always dispose of used developer in accordance with local regulations.
5. Never load types of developer and toner into the development unit other than specified for this model. Doing so will cause poor print quality and toner scattering.
6. Immediately after replacing the developer, do the SPs as described in the 'SP Codes after Replacement' section of PCU replacement.
7. Never do **SP3801** with used developer.
8. When using a vacuum cleaner to clean the development unit casing, always ground the casing with your fingers to avoid damaging the toner density sensor with static electricity.
9. The TD sensor must be initialized:
   - After replacing developer. (Initialize the TD sensor only for the PCU where the developer was replaced.)

   Important

   - **Never initialize the TD sensor more than once. Initializing the TD sensor more than once can cause toner scatter inside the machine.**

Cleaning

1. When servicing cleaning components, avoid nicking the edges of the cleaning blades.
2. Never handle a cleaning blade with bare hands.
3. Before disassembling a cleaning section, place a sheet of paper under it to catch any toner falling.

Fusing Unit

1. Never handle fusing lamps and rollers with bare hands.
2. Make sure that the fusing lamps are positioned correctly and do not touch the inner surface of the rollers.

Paper Feed

1. Do not touch the surfaces of the pick-up, feed, and separation rollers.
2. To avoid paper misfeeds, the side fences and end fence of the paper trays must be positioned correctly to align with the actual paper size.

Waste Toner

1. Check the amount of waste toner at every service visit.

2. Always dispose of waste toner in accordance with local regulations.
3. Never throw toner into an open flame.

Fiery Controller

1. Use the "Shut Down" button on the operation panel to turn off the Fiery controller. Do not turn off the main power switch of the mainframe before shutting down the Fiery controller. The shut down procedure for the Fiery controller is described below.
   - Press the "Fiery" tab on the operation panel.
   - Press the "Restart Fiery" button on the operation panel.
   - Press the "Shut Down" button on the operation panel.
2. Then shut down the machine
   - Push the operation switch to turn the power off
   - When the power LED goes off, turn the main power switch off.

   ⚠CAUTION

   - Do not turn off the main power switch when the power LED is lit or flashing.

The shutdown can be also done with the Service Menu of the Fiery controller. If you have mistakenly turned off the machine first, use the "Service Menu" of the Fiery controller.

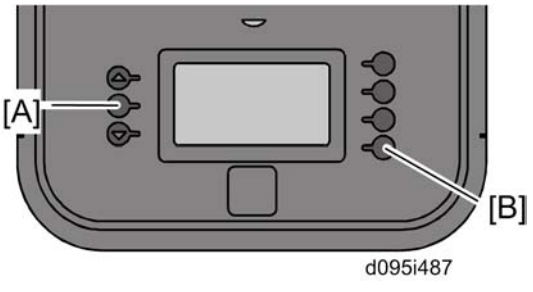

1. Press the button [A] (Menu) on the operation panel of the Fiery controller.
1. Select "Shut Down System" with the button [B].

Special Tools and Lubricants

Special Tools

Part No.	Description
A0069104	Scanner Positioning Pin (4 pcs./set)*1
A2929500	Test Chart – C4 (10 pcs./set) *1
A0299387	Digital Multimeter – FLUKE 87
B6455010	SD (Secure Digital) Card – 64 MB
M0779503	TEST PRINT TOOL V2

*1: These tools are used only for the D095 model.

Lubricants

Part No.	Description
A2579300	Grease Barrierta – S5525
52039502	Silicon Grease G-501
B1329700	Drum setting powder pad applicator
G0049668	Grease – KS660 – SHIN-ETSU
54429103	Heat Resisting Grease MT-78
54479078	Launa Oil 40

Image Adjustment

Scanning (D095 only)

Before doing the following scanner adjustments, perform or check the printing registration/side-to-side adjustment and the blank margin adjustment. Use a C4 test chart to perform the following adjustments.

Scanner sub-scan magnification

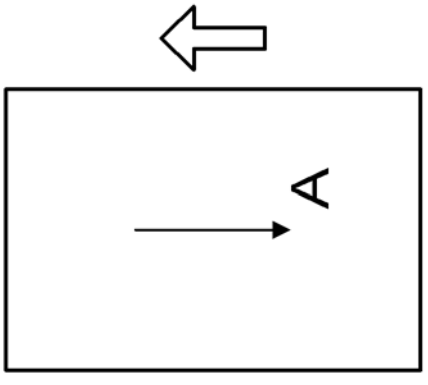

b146r962

1. Place the test chart on the exposure glass and make a copy.
2. Check the magnification ratio. Use **SP4008** (Sub Scan Magnification Adj) to adjust if necessary. Standard: ± 0.9%.

Scanner leading edge and side-to-side registration

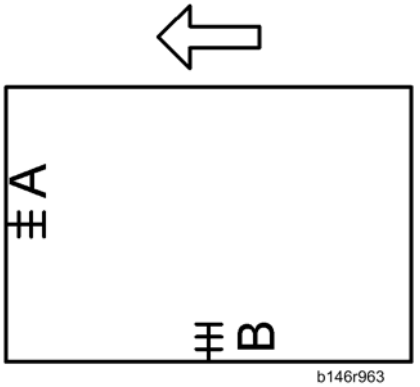

b146r963

Note

- A: Leading edge registration
- B: Side-to-side registration

1. Place the test chart on the exposure glass and make a copy.
2. Check the leading edge and side-to-side registration.
3. Adjust with the following SP modes if necessary. Standard: 0 ± 9 mm for sub-scan, 0 ± 2 mm for main-scan.

	SP mode
Sub Scan Registration Adj	SP4010-001
Main Scan Reg	SP4011-001

ADF (D095 only)

ADF side-to-side and leading edge registration

b146r964

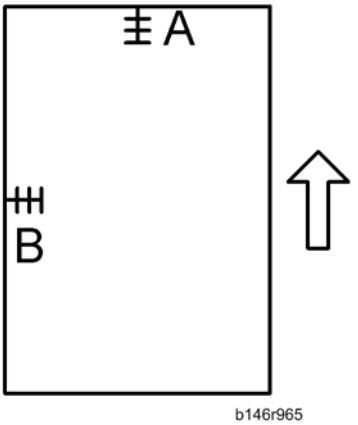

b146r965

Note

- A: Leading edge registration
- B: Side-to-side registration

Make a temporary test chart as shown above using A3/DLT paper.

1. Place the temporary test chart on the ARDF table and make a copy.
2. Check the registration, and adjust using the following SP modes if necessary.

SP Code	What It Does	Adjustment Range

SP6006-001	Side-to-Side Regist:Front	± 3.0 mm
SP6006-002	Side-to-Side Regist:Rear	± 3.0 mm
SP6006-003	Leading Edge (Thin Original)	± 10 steps
SP6006-005	Leading Edge (Duplex-1st)	± 29 steps
SP6006-006	Leading Edge (Duplex-2nd)	± 29 steps

Color Image Check

Note

- Use "T6000 (70W)", "mondi 90gsm" or "Hammermill Color COPY 105gsm" paper to check the image quality of the printout.

Checking Procedure

To check the color image on the output, do the following procedure.

1. Turn on the main power switch.
2. Press the "Fiery" tab on the LCD.
3. Press the "Printable Info" button.
4. Press the "PS Test Page" button, and then the "OK" button.

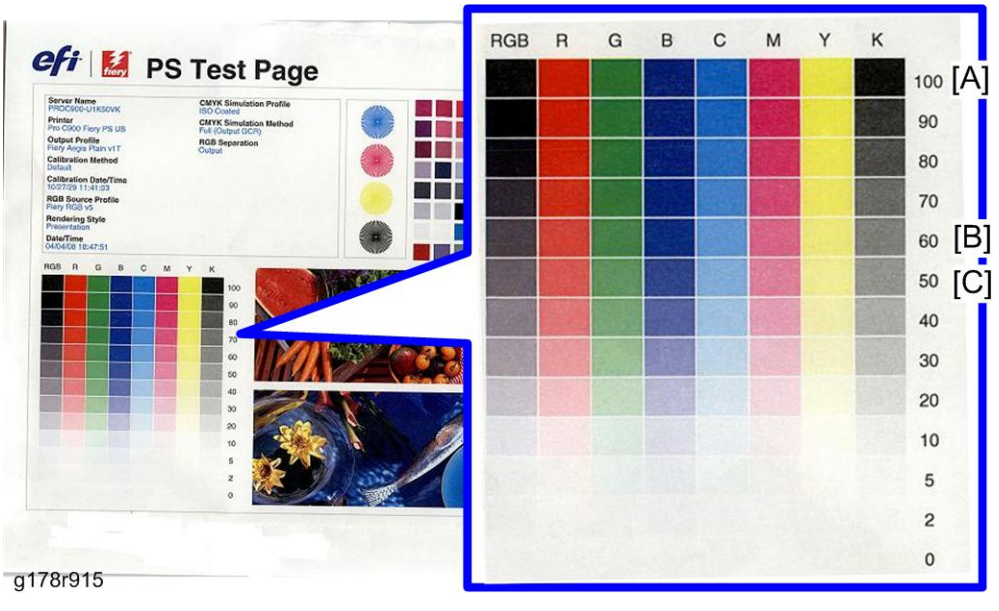

5. Check if each 100% pattern [A] has a solid color without imperfections (not blotched or scratched).

6. Color print via PC (Fiery print driver's test print page can be used.)
7. Check if the density difference between the 60% [B] and 50% [C] patterns is clearly visible.

Recovery Procedure

If a problem appears on the test print, do the following procedures.

For Solid Color Problems

- Enter the SP mode, and then execute the process control with SP3-820-001.

For Density Difference Problems

- Execute the color calibration with the "Fiery Controller".

Color Registration Check

Checking Procedure for Printer (M077) model

To check the color registration on the output, do the following procedure.

1. Turn on the main power switch.
2. Enter the SP mode and then select SP2109-002 ("Select Pattern" < "Write Test Pattern").
3. Select the No.9 (9: 20mm Grid) pattern in the test pattern list, and then press "OK".
4. Press the "APL Window" button on the top of the LCD.
5. Select a paper size and print mode (simplex or duplex).
6. Prepare a PC for printing.
7. Print a test page in the Fiery printer driver.
8. Check that the grid lines for each color are superimposed correctly.

Note

- Do not use "Print" button on the LCD to print a test pattern. Only a black and white image is outputted if you use "Print" button on the LCD. The color registration check requires a color image output.
- Make sure that a test page has black, red, green and blue colors.

Checking Procedure for Copier (D095) model

To check the color registration on the output, do the following procedure.

1. Turn on the main power switch.
2. Set a sheet of paper on the original tray of ADF.

3. Enter the SP mode and then select SP2109-002 ("Select Pattern" < "Write Test Pattern").
4. Select the No.9 (9: 20mm Grid) pattern in the test pattern list, and then press "OK".
5. Press the "APL Window" button on the top of the LCD.
6. Select a paper size and print mode (simplex or duplex).
7. Select the "Full Color" mode.

   Important

   - **Make sure that the "Full Color" mode is selected. Otherwise, the color registration check cannot be done correctly.**
8. Press the "Start" key on the operation panel.
9. Check that the grid lines for each color are superimposed correctly.

Recovery Procedure

If a problem appears on the test print, do the following procedures.

1. Exit from SP2109-002 and then select SP2153-001 ("Manual Execute: Mode a" < "MUSIC Condition Settings 1").
2. Execute "MUSIC: Mode a".
3. Print out the "20mm Grid" with SP2109-002, and then check the test pattern.

Ruled Line Check

Note

- Use "T6000 (70W)", "mondi 90gsm" or "Hammermill Color COPY 105gsm" paper to check the image quality of the printout.

Checking Procedure for Printer (M077)

To check the ruled line on the output, do the following procedure.

1. Turn on the main power switch.
2. Enter the SP mode (System SP) and then select SP2109-002 ("Select Pattern" < "Write Test Pattern").
3. Select the No.9 (9: 20mm Grid) pattern in the test pattern list, and then press "OK".
4. Print out the 20mm grid pattern sample for each single color with SP2109-004.

   There are 8 bits on the screen in SP2109-004. Each bit corresponds with a color.

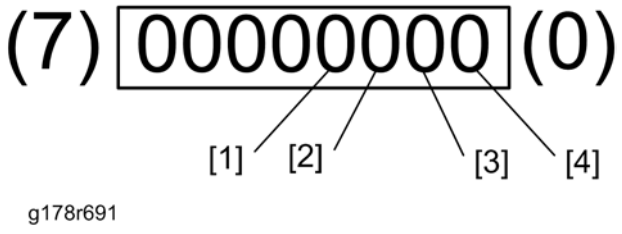

"0": Not selected, "1": Selected

- [1] for **"Black"**. Press the "**3**" key on the operation panel if you want to select this color.
- [2] for **"Cyan"**. Press the "**2**" key on the operation panel if you want to select this color.
- [3] for **"Magenta"**. Press the "**1**" key on the operation panel if you want to select this color.
- [4] for **"Yellow"**. Press the "**0**" key on the operation panel if you want to select this color.

5. Press the "APL Window" button on the top of the LCD.
6. Select a paper size and print mode (simplex or duplex).
7. Prepare a PC for printing.
8. Print a test page in the Fiery printer driver.
9. Check that the grid lines for each single color test pattern are not scratched.

Note

- Do not use "Print" button on the LCD to print a test pattern. Only a black and white image is outputted if you use "Print" button on the LCD. The color registration check requires a color image output.
- Make sure that a test page has a relevant color.

Checking Procedure for Copier (D095) model

To check the ruled line on the output, do the following procedure.

1. Turn on the main power switch.
2. Set a sheet of paper on the original tray of ADF.
3. Enter the SP mode and then select SP2109-002 ("Select Pattern" < "Write Test Pattern").
4. Select the No.9 (9: 20mm Grid) pattern in the test pattern list, and then press "OK".
5. Print out the 20mm grid pattern sample for each single color with SP2109-004.

   There are 8 bits on the screen in SP2109-004. Each bit corresponds with a color.

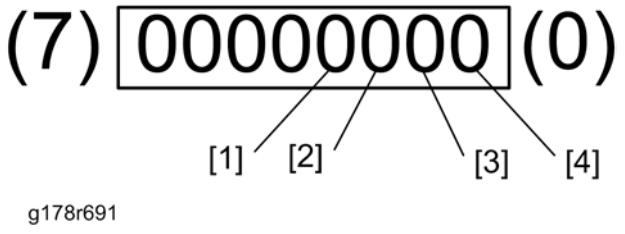

"0": Not selected, "1": Selected

- [1] for **"Black"**. Press the "**3**" key on the operation panel if you want to select this color.
- [2] for **"Cyan"**. Press the "**2**" key on the operation panel if you want to select this color.
- [3] for **"Magenta"**. Press the "**1**" key on the operation panel if you want to select this color.
- [4] for **"Yellow"**. Press the "**0**" key on the operation panel if you want to select this color.

6. Press the "APL Window" button on the top of the LCD.
7. Select a paper size and print mode (simplex or duplex).
8. Select the "Full Color" mode.

Important

- **Make sure that the "Full Color" mode is selected. Otherwise, the color registration check cannot be done correctly.**

9. Press the "Start" key on the operation panel.
10. Check that the grid lines for each single color test pattern are not scratched.

Recovery Procedure

If a problem appears on the test print, do the following procedures.

- Enter the SP mode, and then execute the process control with SP3-820-001.

Image Shift Check between the 1st and 2nd Pages

Note

- Use "T6000 (70W)", "mondi 90gsm" or "HummerMILL Color COPY 105gsm" paper to check the image quality of the printout.

Checking Procedure

To check the image shift on the output, do the following procedure.

1. Turn on the main power switch.

2. Press the "User Tool" button, and then the "Adjustment Settings for Operators" button.
3. **For Copier D095 only,** do the followings.
    - Select “0702:Switch Print Screen”.
    - Select "Printer", then press "OK" (default "Copy").
4. Select “0101:Adjust Image Position With Feed Direction”.
5. Press the "To Print Screen" button on the top of the LCD.
6. Select a paper size and duplex print mode.
7. Press the "Print" button, and then the "OK" button to print the "Adjustment Printing" test pattern.

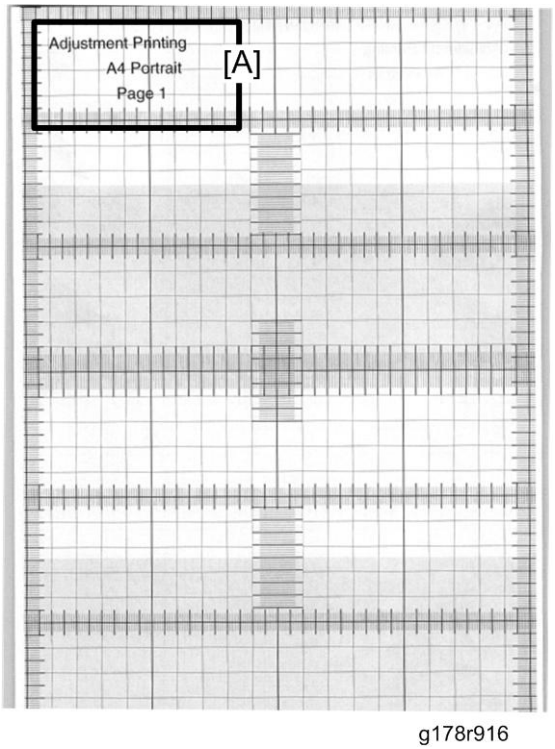

g178r916

8. The test pattern is shown above.
    - The information [A] indicates the paper size and side (1st or 2nd).

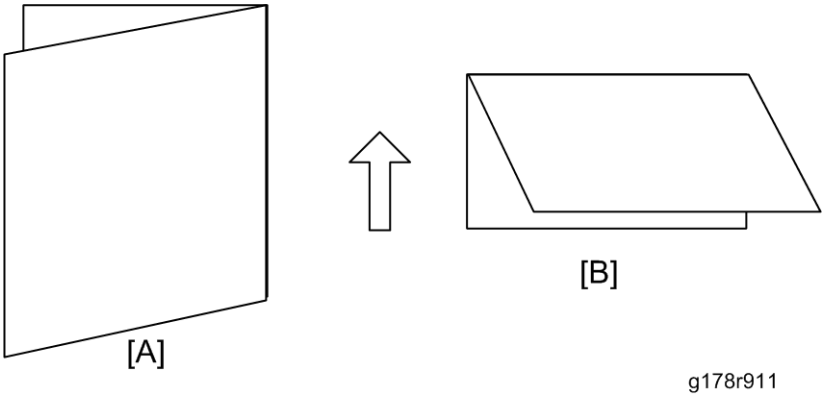

9. Fold the printed test pattern in half vertically [A] and horizontally [B].

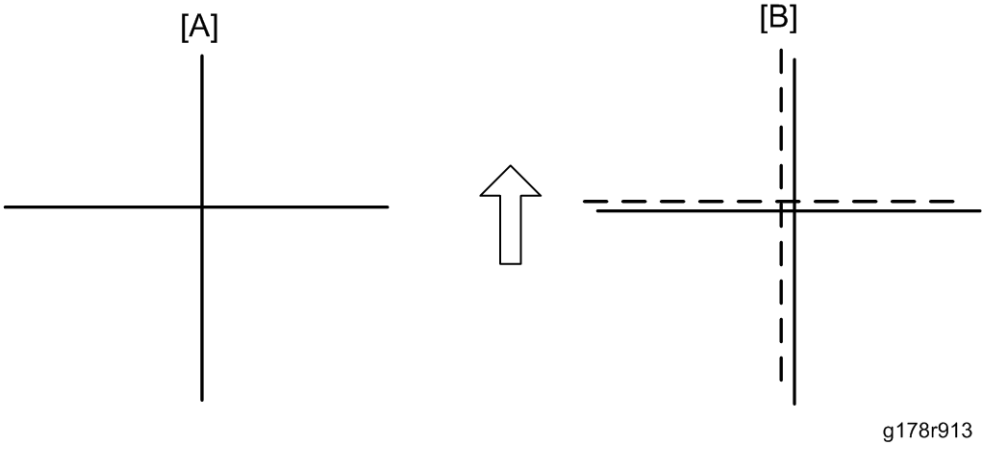

1. Check if the vertical and horizontal center lines [A] on the 1st page of the printed test pattern (shown as solid lines in the above diagram) are not shifted away from the fold lines [B] (shown as dotted lines in the above diagram).
   - Acceptable shift range ≦ 1 mm

   Note

   - The diagram on the left above shows the result when there is no image shift. The diagram on the right shows the result when the image on the test pattern is shifted.
2. Check if the test pattern image on the 2nd side is shifted in the same manner as the 1st page.
   - Acceptable shift range ≦ 1 mm

Adjustment Procedure

Note

- The adjustment for the sub-scan shift and main-scan shift are required at the machine installation. To adjust the sub-scan shift and main-scan shift, use the user program mode or SP mode described below.
- The adjustment for sub-scan shift can be done for each paper weight and the adjustment for main-scan shift can be done for each paper tray.

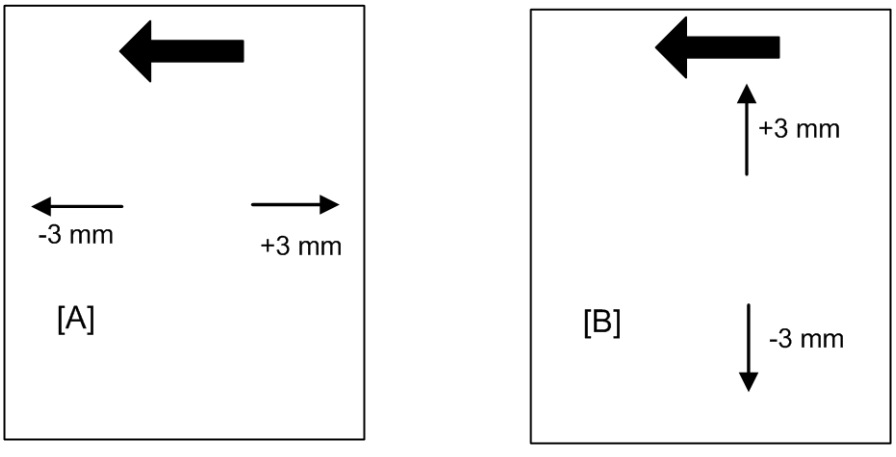

g178r914

1. Adjust the sub-scan shift [A] on the 1st page with "0101:Adjust Image Position With Feed Direction" of the UP mode or SP1710-001 to -007.
2. Adjust the sub-scan shift [A] on the 2nd page with "0101:Adjust Image Position With Feed Direction" of the UP mode or SP1711-001 to -007.
   - Input a - value to shift the image towards the leading edge.
   - Input a + value to shift the image towards the trailing edge.
3. Adjust the main-scan shift [B] on the 1st page with "0102:Adjust Image Position Across Feed Direction" of the UP mode or SP1720-001 to -011.

   Note

   - Each paper tray can be adjusted with UP mode or SP1721 (Image Pos:Sub (1st page)).
4. Adjust the main-scan shift [B] on the 2nd page with "0102:Adjust Image Position Across Feed Direction" of the UP mode or SP1721-001 to -011.
   - Input a - value to shift the image towards the front edge.
   - Input a + value to shift the image towards the rear edge.

   Note

   - Each paper tray can be adjusted with UP mode or SP1721 (Image Pos:Sub (2nd page)).

5. Print out the test pattern, and then check the printed test pattern.

Note

- You can print out the test pattern in UP mode.

Adjustable User SP List

The following user SPs below can shift the image in the "**Sub-Scan**" direction.

- Default setting: 0 mm
- Adjustable range: [–3.0 to +3.0 mm]

User Mode	Description
Paper Weight 1 to 7	For all trays: This shifts the image on the 1st page.
Paper Weight 1 (Back Side) to 7 (Back Side)	For all trays: This shifts the image on the 2nd page.

The following user SPs below can shift the image in the "**Main-Scan**" direction.

- Default setting: 0 mm
- Adjustable range: [–3.0 to +3.0 mm]

User Mode	Description
Tray 1 to 7	For all trays: This shifts the image on the 1st page.
Tray 1 (Back Side) to 7 (Back Side)	For all trays: This shifts the image on the 2nd page.

Image Skew Check

Note

- Use "T6000 (70W)", "mondi 90gsm" or "Hammermill Color COPY 105gsm" paper to check the image quality of the printout.

Checking Procedure

To check the image skew on the output, do the following procedure.

1. Turn on the main power switch.
2. Enter the SP mode (System SP).

3. Press the "APL Window" button on the top of the LCD.
4. Select a paper size and duplex print mode.
5. Press the "Print" button to print the "Adjustment Printing" test pattern.

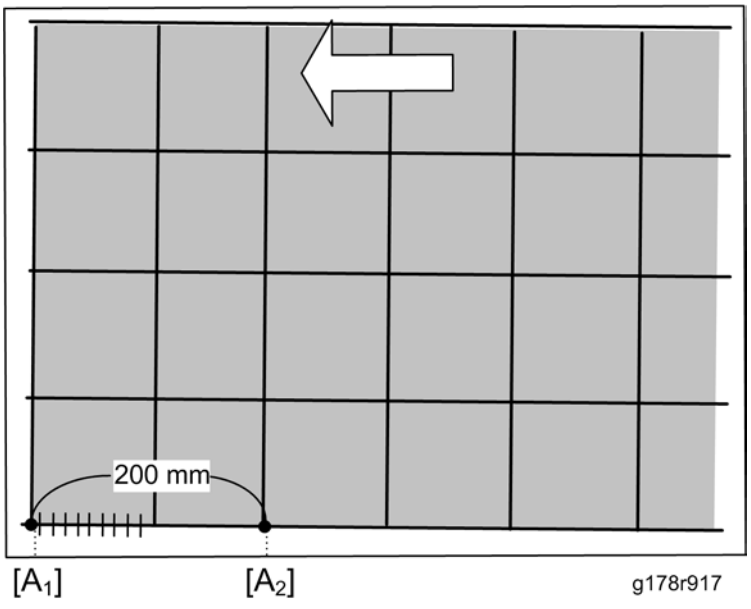

6. Check the distance between the image edge and paper edge at two points [A_1] and [A_2] in the main-scan direction.
   - Acceptable range: [A_1] – [A_2] ≦ ±0.5 mm (A4 or LT SEF or more)

Adjustment Procedure

1. Check the gap between [A_1] and [A_2] described in the previous checking procedure.
2. Turn off the power of the mainframe and pull out the power cord.

   Note

   - See "Correct Procedure to Turn Off the Power" in "Installation Requirements" for how to turn off the machine without causing damage to the components.
3. Pull out the registration drawer unit (page 463).
4. Remove the inner registration cover (page 465 "Inner Registration Cover").

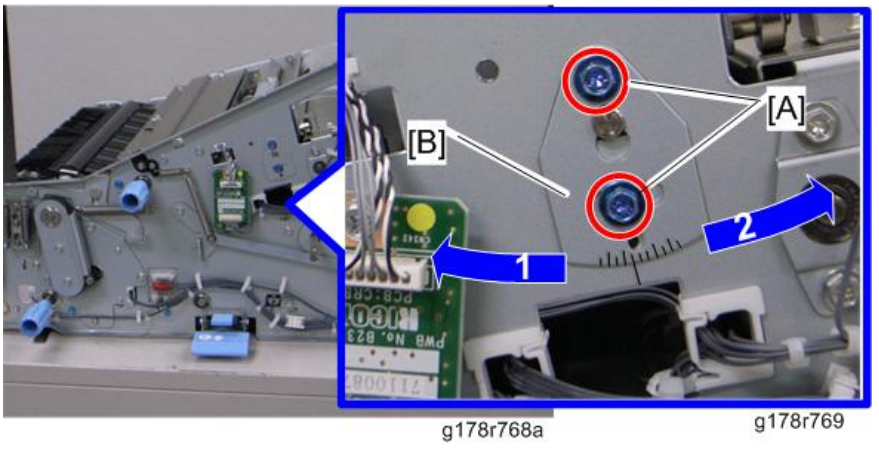

5. Loosen the screws [A] on the adjustor [B].
6. Move the adjustor [B] in the "1" or "2" direction to adjust the image skew.
   - $[A_1] > [A_2]$: Move the adjustor in the "1" direction by the size of the gap ($A_1 - A_2$). One notch on the scale = 0.15 mm
   - $[A_1] < [A_2]$: Move the adjustor in the "2" direction by the size of the gap ($A_2 - A_1$). One notch on the scale = 0.15 mm
7. Tighten the screws on the adjustor.
8. Reassemble the machine.
9. Plug in and turn on the mainframe.
10. Check the image skew again.

Exterior Covers

Front Door

Left Front Door

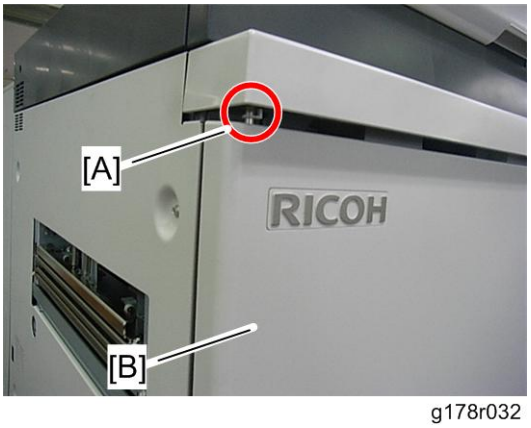

g178r032

1. Remove the clip [A]
2. Open the left front door [B].
3. Lift up the left front door, and then remove it.

Right Front Door

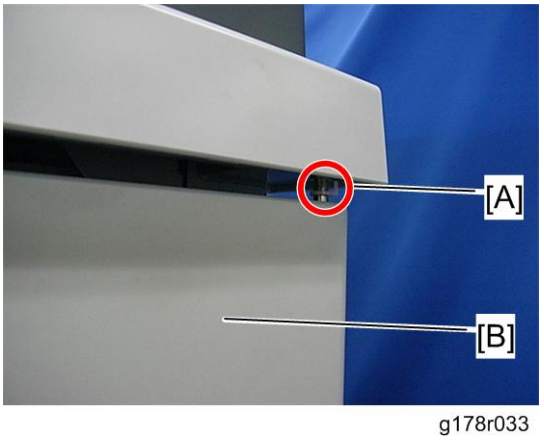

g178r033

1. Remove the clip [A]
2. Open the right front door [B].

3. Lift up the right front door, and then remove it.

Left Cover

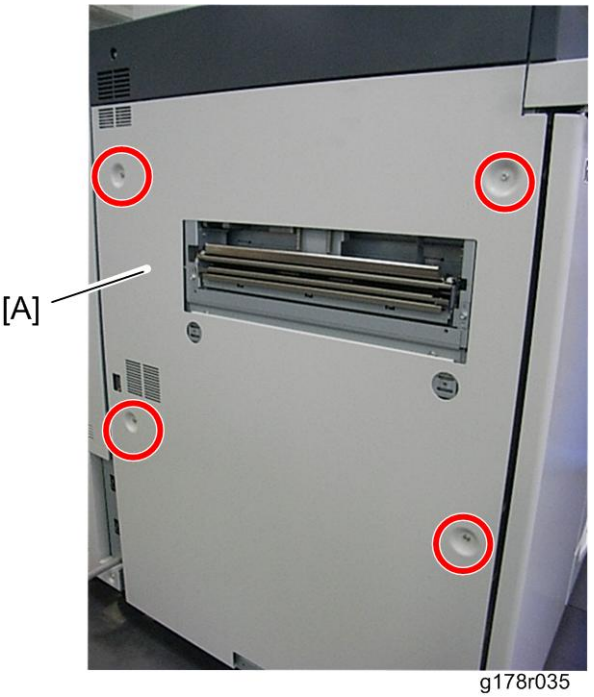

g178r035

1. Left cover [A] (x 4)

Right Cover

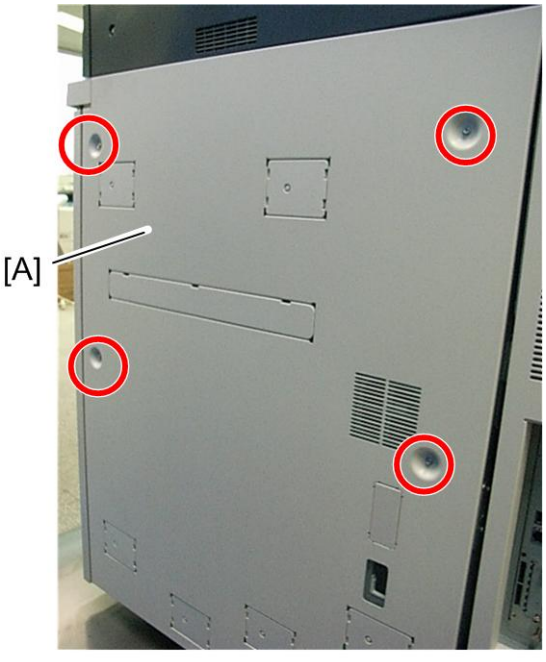

g178r036

1. Right cover [A] (x 4)

Front Top Cover

1. Open the left and right front doors.

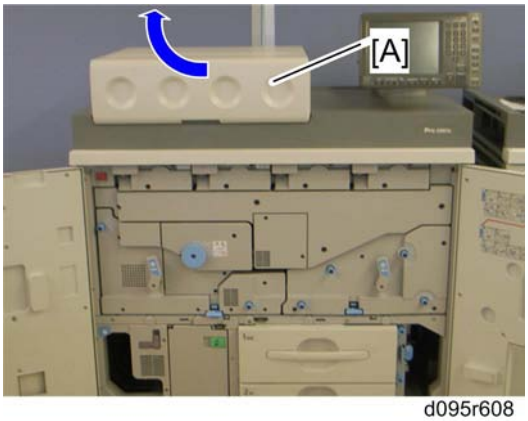

d095r608

2. Open the toner hopper door [A].

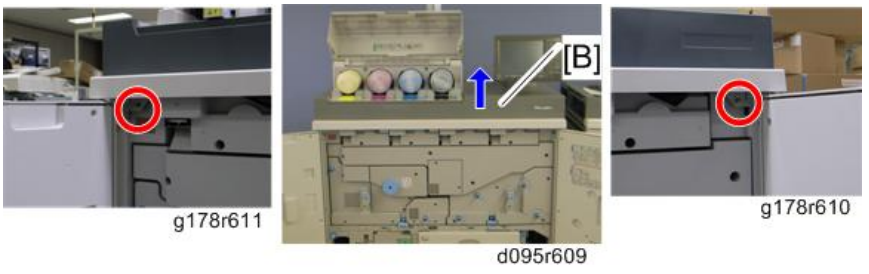

3. Front top cover [B] (x 2)

Rear Top Cover

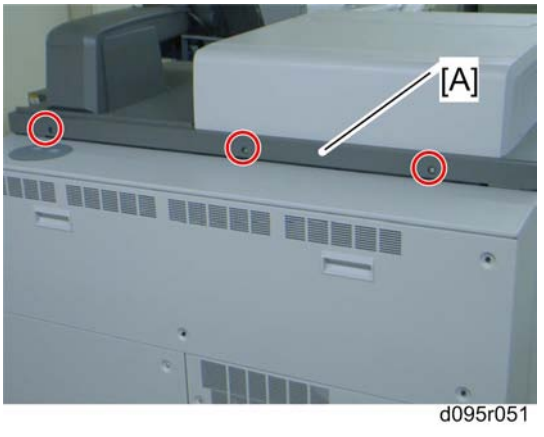

1. Rear top cover [A] (x 3)

Rear Upper and Lower Covers

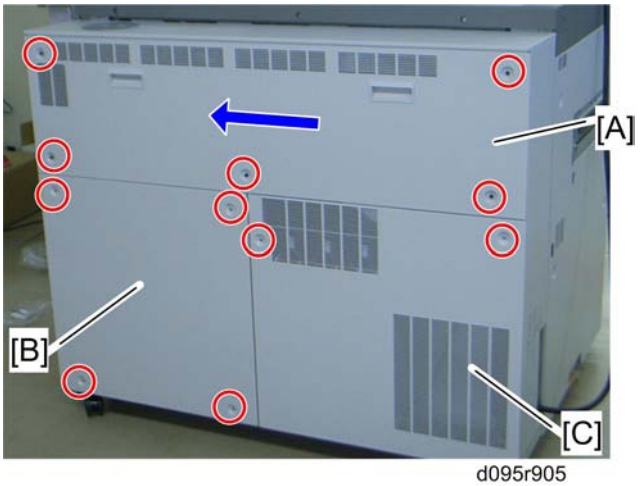

d095r905

Rear Upper Cover

1. Rear upper cover [A] (x 5)

Rear Lower Right Cover

1. Rear lower right cover [B] (x 4)

Rear Lower Left Cover

1. Rear lower left cover [C] (x 2)

Operation Panel Arm

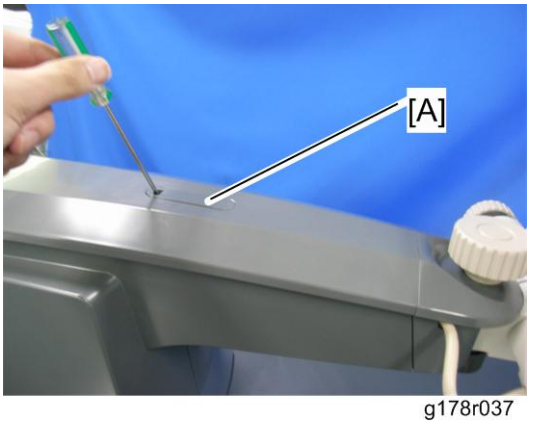

g178r037

1. Cover [A] (hooks)

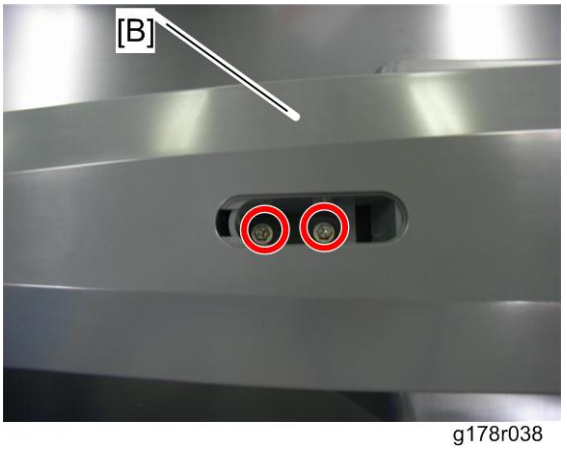

g178r038

2. Arm top cover [B] (x 2)

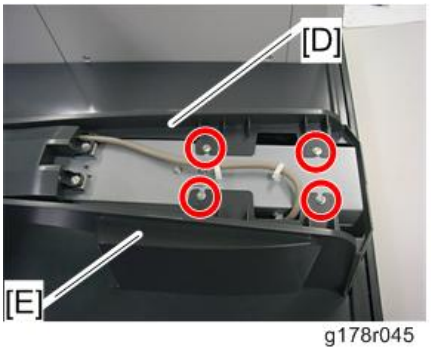

g178r045

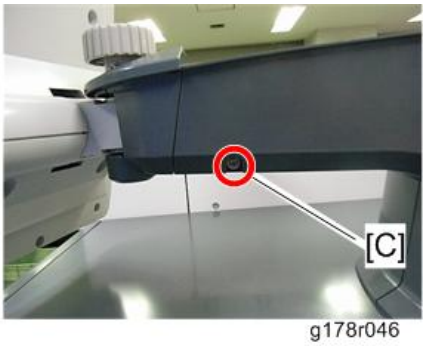

g178r046

3. Screw [C]
4. Arm left cover [D] (x 2)

5. Arm right cover [E] (x 2)

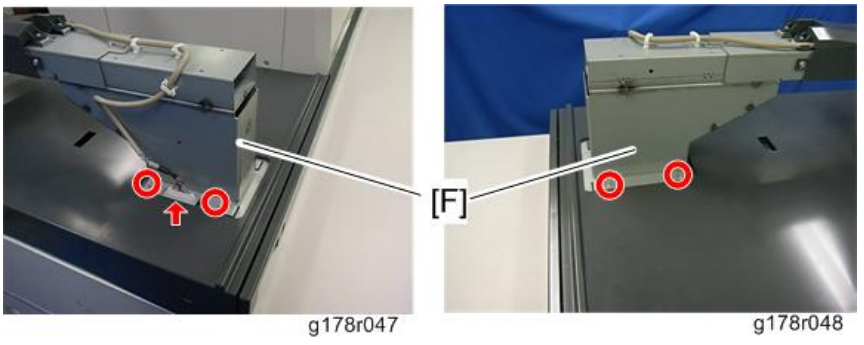

6. Operation panel arm [F] (x 4, x 1)

Operation Panel

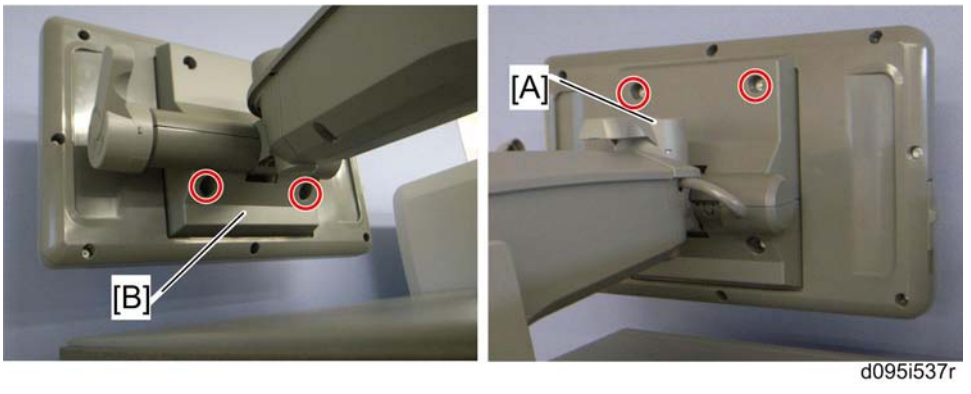

1. Hinge upper cover [A] (x 2)
2. Hinge lower cover [B] (x 2)

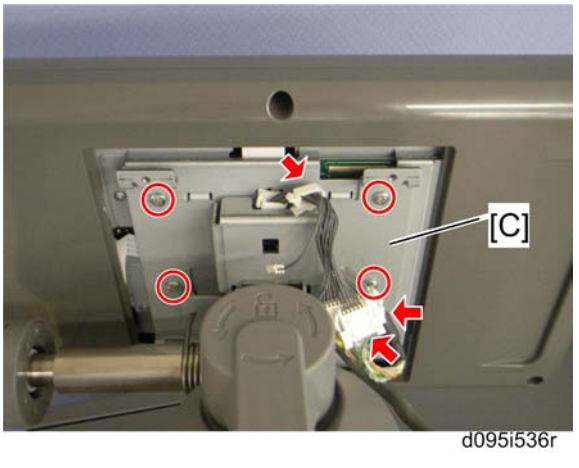

3. Operation panel [C] (x 4, x 2, x 1)

OPU

1. Operation panel (page 349)

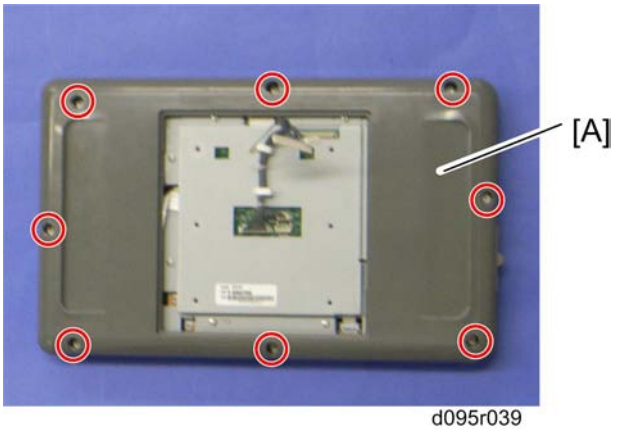

d095r039

2. Panel rear cover [A] (x 8)

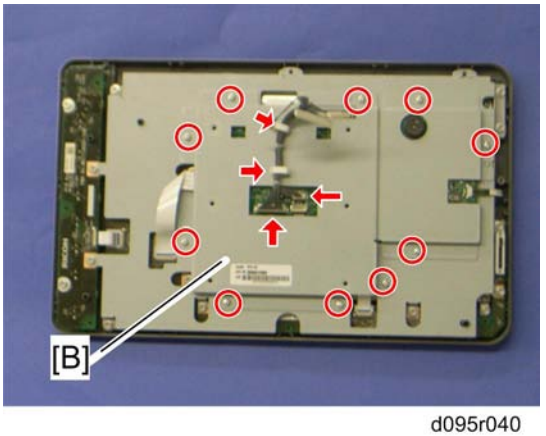

d095r040

3. OPU cover [B] (x 10, x 2, x 2)

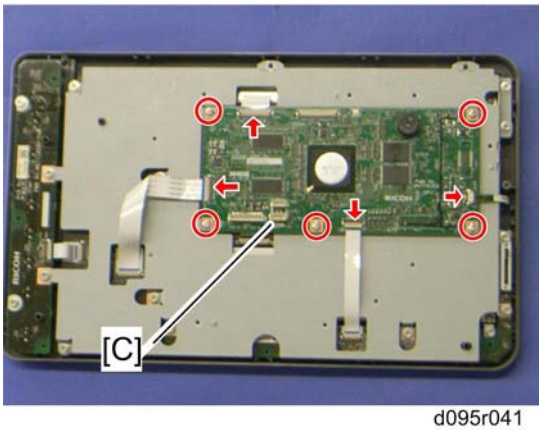

d095r041

4. OPU [C] (x 5, x 4)

Main Key, Sub Key and Application Key Board, and LCD Unit

1. Panel rear cover (page 350 "OPU")

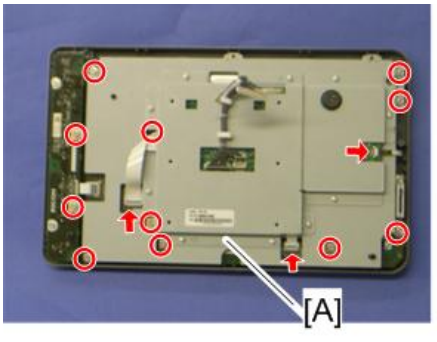

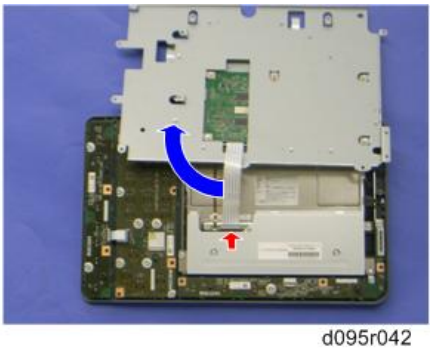

d095r042

2. OPU bracket [A] (x 11, x 4)

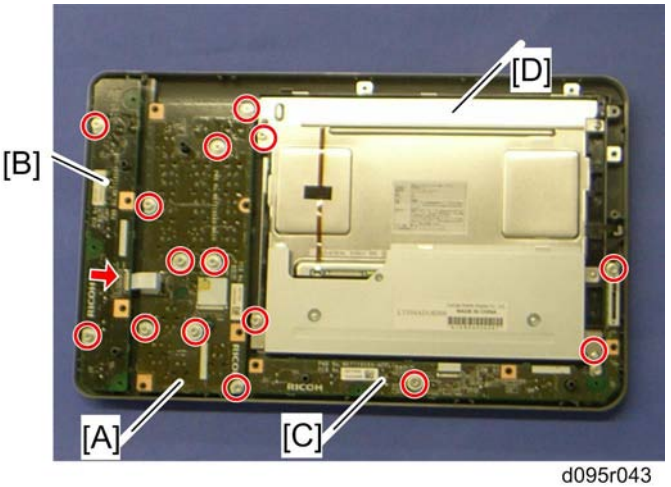

d095r043

3. Main key board [A] (x 8, x 1)
4. Sub key board [B] (x 2, x 1)
5. Application key board [C] (x 2)
6. LCD unit [D] (x 3)

When reinstalling the application key board

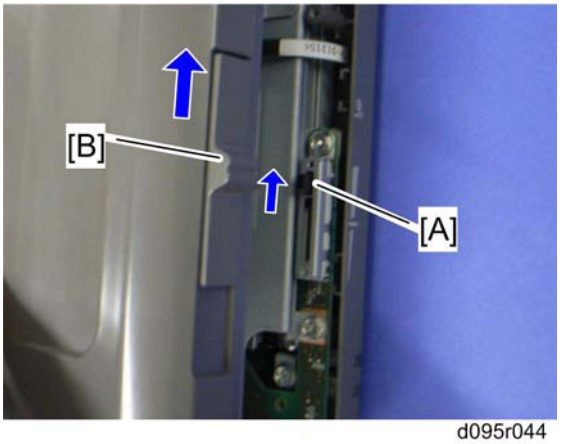

d095r044

Make sure that the adjuster tab [A] on the application key board and adjuster [B] on the panel rear cover are moved upwards as far as possible before attaching the panel rear cover to the operation panel.

Inverter Fuse

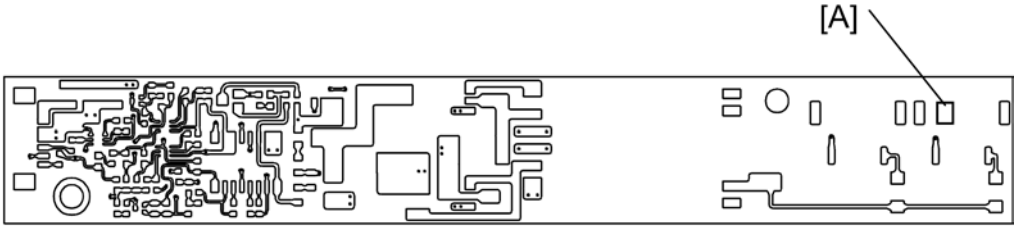

g178d904

	Rating	Manufacturer	Type No.
[A]: F1	DC72V/2A	KOA CORP	CCP2E50TTE

Touch Panel Position Adjustment

Note

- It is necessary to calibrate touch panel at the following times:
- When you replace the operation panel.
- When you replace the controller board.
- When the touch panel detection function does not operate correctly.

Do not use items [2] to [9] on the Self-Diagnostic Menu. These items are for design use only.

1. Press , press "1", "9", "9", "3", press 5 times to open the Self-Diagnostics menu.

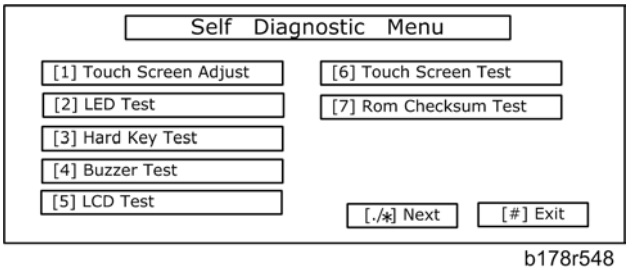

b178r548

2. On the touch screen press "Touch Screen Adjust" (or press "1").
3. Use a pointed (not sharp) tool to press the upper left mark .

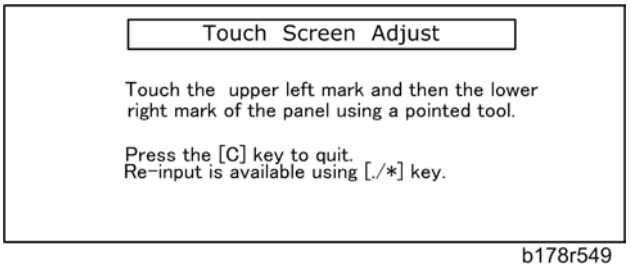

b178r549

4. Press the lower right mark when "O" shows.
5. Press [#] OK on the screen (or press #) when you are finished.
6. Touch [#] Exit on the screen to close the Self-Diagnostic menu. Save the calibration settings.

Rear Controller Box

Opening the rear controller box

1. Rear top cover (page 346)

d095i518r

2. Remove the two screws that attach the rear controller box to the mainframe.

d095i519

3. Loosen the fixing pins at rear right and left bottom with a minus (flat-headed) screwdriver.
4. Open the rear controller box, while holding the right side (viewed from the rear).

Detaching the rear controller box

1. Open the rear controller box (described in the previous procedure).

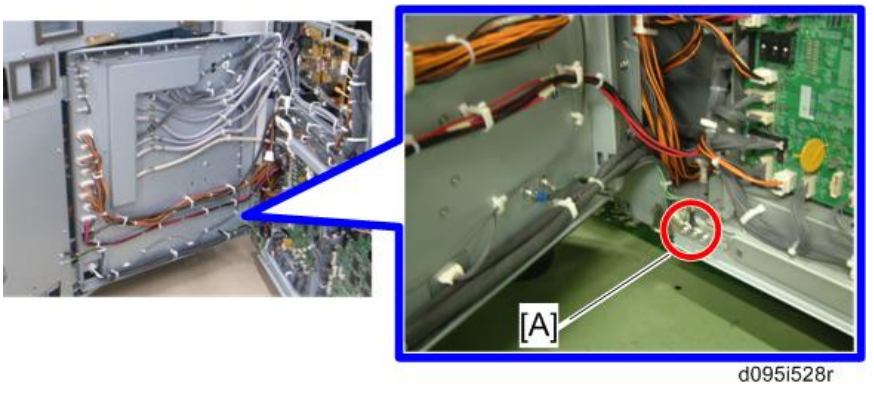

2. Remove two ground cables [A] (x 1 each).

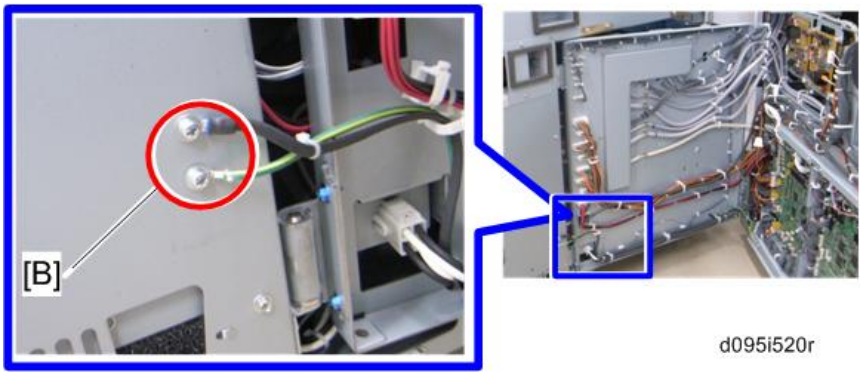

3. Remove two ground cables [B] (x 1 each).

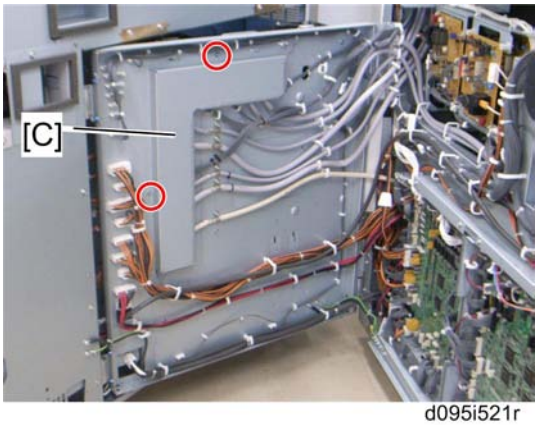

d095i521r

4. Connector cover [C] (x 2).

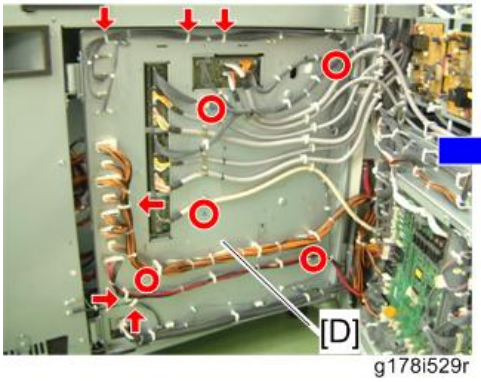

g178i529r

g178i569r

5. Unlock six clamps and disconnect all connectors.

Important

- Do not unlock clamps other than the clamps indicated by arrow marks. Otherwise, wrong connections may be made when attaching the rear controller box.

6. Open the harness bracket [D] (x 5).

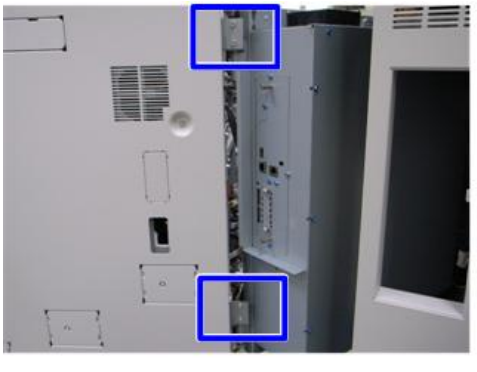

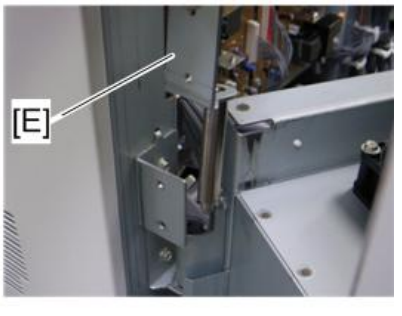

g178i523r

7. Remove the pivot brackets (upper and lower) [E] (x 2 each).

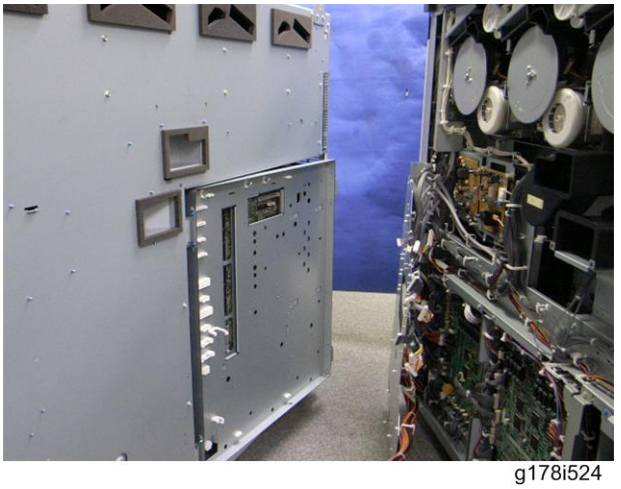

g178i524

8. The picture above shows that the rear controller box is away from the main machine.
9. When reassembling the machine, look for a tube that comes from the rear of the machine. Be very careful not to damage this tube. This comes from the fusing unit, and connects to the optional air separator unit.

Laser Unit

⚠WARNING

- The laser units in this machine employ a total of 16 laser beams produced by Class 3B LDs with a wavelength of 770 to 810 nm and intensity of Max. 111 (Rated. 38) mW. The power intensity from the laser unit is 1.33 mW. The divergence of the laser beams is $\theta\perp$ 31 deg. (Ave.), $\theta//$ 9 deg. (Ave.) and laser beams are generated in CW (Continuous Wave) mode. Direct exposure to the eyes could cause permanent blindness.
- Before adjusting or replacing the laser unit, push the main power switch to power the machine off then unplug the machine from the power source. Allow the machine to cool for a few minutes. The polygon motor continues to rotate for approximately one to three minutes after the machine is switched off. (☛page 58 "Correct Procedure to Turn Off the Power ")
- Never power on the machine with any of these components removed: 1) LD unit, 2) polygon motor cover, 3) synchronization detector.

Caution Decals

View from the top of the printer

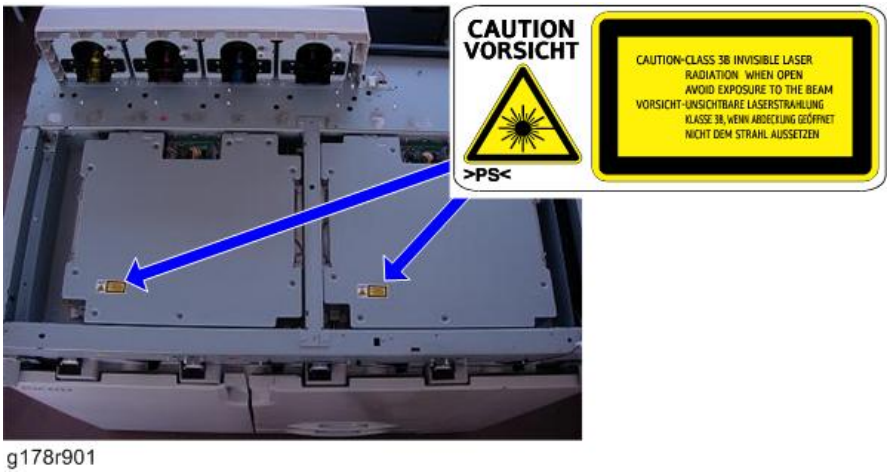

g178r901

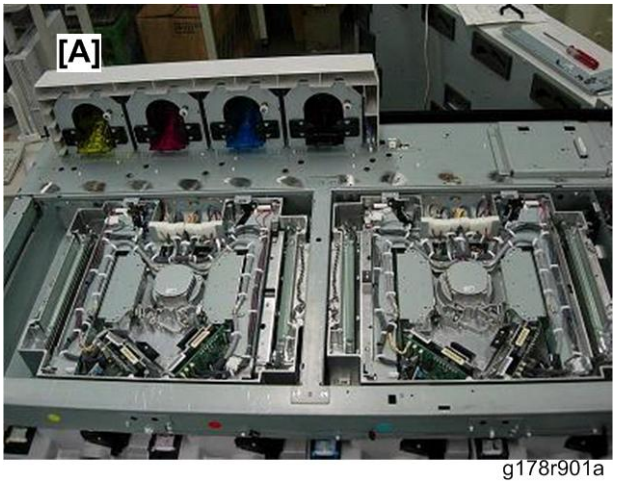

g178r901a

- The picture [A] shown above shows that the laser unit covers are detached.

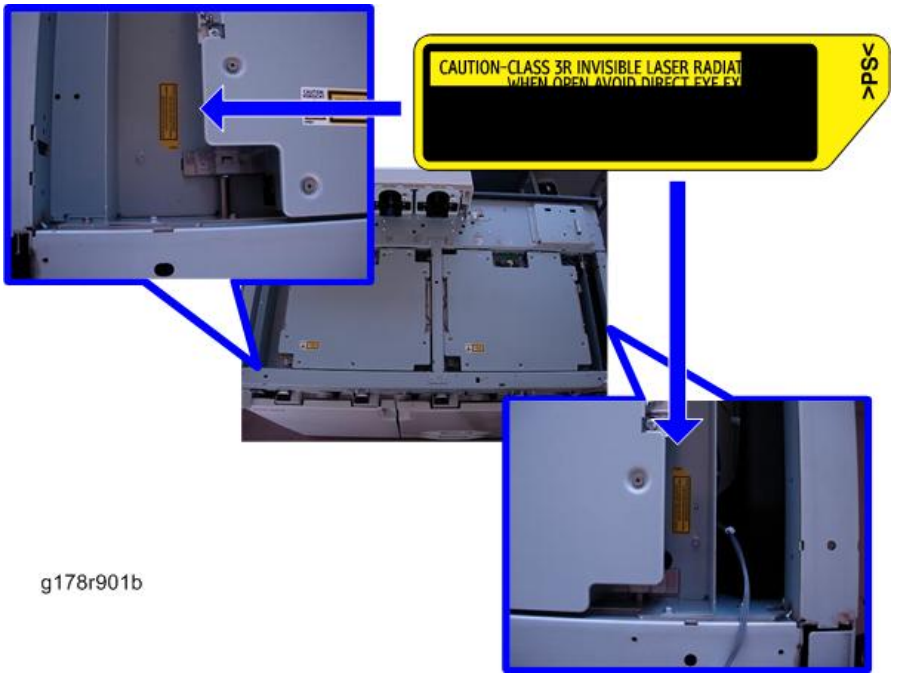

g178r901b

g178r901c

- The picture [B] shown above shows that the laser unit is detached.

View from the rear of the printer

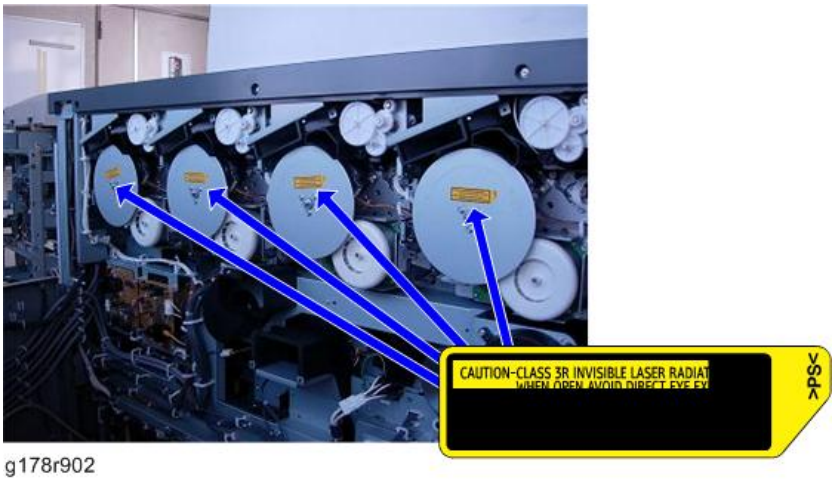

g178r902

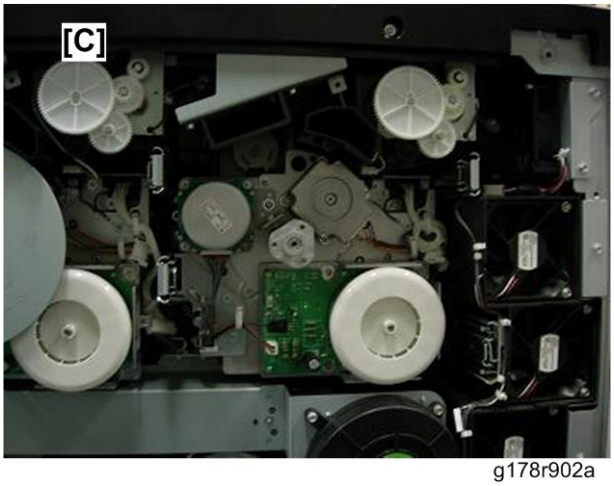

g178r902a

- The picture [C] shown above shows that the flywheel is detached.

LD Safety Switches

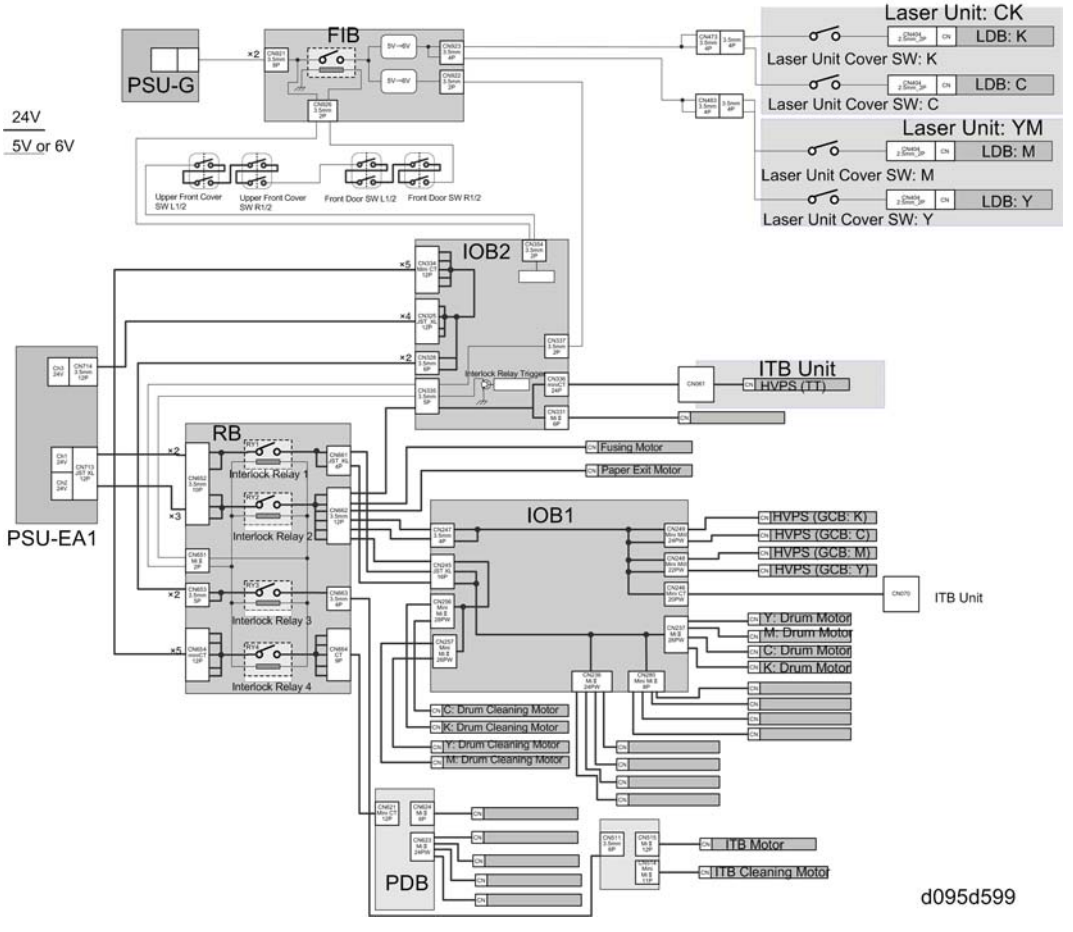

For the safety of customers and customer engineers, switches in the machine prevent the laser beam from switching on accidentally.

When the front door, the upper front cover, or the laser unit cover is open, the +5V or +6V line connecting each LD driver on the LD drive board is disconnected.

However, the switches in the laser units are only installed for the customer engineer's safety because the customer cannot access the laser units.

Laser Unit

Note

- There are two laser units in this machine. The replacement procedures of the CK and YM laser units are identical. Therefore, only the replacement procedure of the laser unit CK is described in this section.

1. Toner hopper cover (page 380)

g178r054

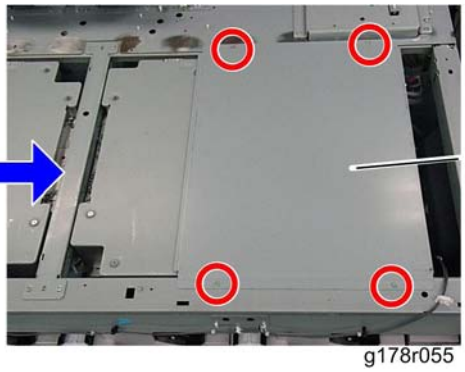

g178r055

2. Laser unit bracket [A] (x 4)

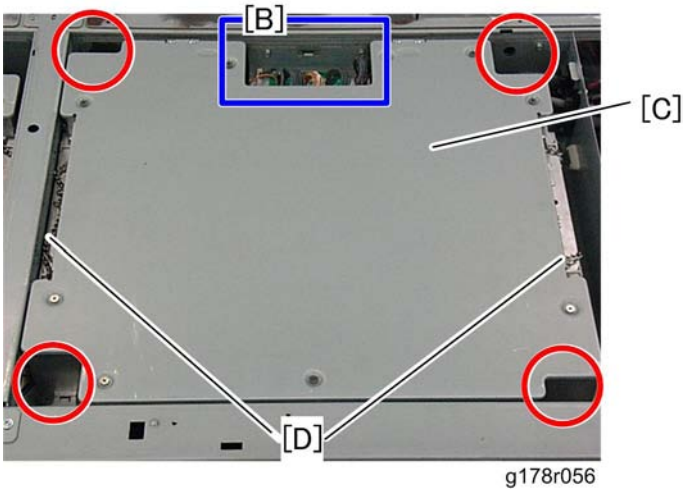

g178r056

3. Disconnect all harnesses [B] on the OPI board.

Note

- When reinstalling the laser unit, make sure that all harnesses [B] on the OPI board are connected firmly. Otherwise, an SC error may be issued.

4. Laser unit [C] (x 8: M4x12)

Note

- Hold the chains [D] at the both side of the laser unit, and then lift and move the laser unit.

Reinstallation

Each laser unit is precisely adjusted at the factory. When you replace the laser unit, you must input the values, which are adjusted for each new laser unit, and adjust some settings with SP modes. The values are printed on a sheet of paper, which is provided with a new laser unit.

If you replace the laser unit CK, it is only necessary to do the adjustments for the CK laser unit.

If you replace the laser unit YM, it is only necessary to do the adjustments for the YM laser unit.

1. Disable the automatic MUSIC and Process Control adjustment.
   1) Change the setting value of SP2-193-001 to "0".
   2) Change the setting value of SP3-501-001 to "1".
2. Disable 2-point detection.
   1) Change the setting value of SP2-186-001 to "0".
3. Check and reset the skew settings.

   Skew Adjustment for Laser Unit CK

   1) Check and note the value of SP2-104-004 (current value).
   2) Change the value of SP2-117-004 (skew motor K) to "1".
   3) Input the value, which is already checked in step 1), with SP2-119-004.
   4) Execute "SP2-118-004" (skew adjustment for K)
   5) Change the value of SP2-117-001 (skew motor C) to "1".

   Skew Adjustment for Laser Unit YM

   1) Change the value of SP2-117-002 (skew motor M) to "1".
   2) Change the value of SP2-117-003 (skew motor Y) to "1".
4. Input the LD unit adjustment settings.

   Input Procedure for Laser Unit CK

1)	Input the values of **KB** on the sheet provided with a new laser unit CK for SP2-101-001, 2-102-036 and -046. • **KB**: xxx (for 2-101-001), xxx (for 2-101-002), xxx (for 2-102-036), xxx (for 2-102-046)

2)	Input the values of KC on the sheet provided with a new laser unit CK for SP2-102-030, -0031, -032, -033, -034 and -035. • KC: xxx (for -030), xxx (for -031), xxx (for -032), xxx (for -033), xxx (for -034), xxx (for -035)
3)	Input the values of KD on the sheet provided with a new laser unit CK for SP2-102-040, -041, -042, -043, -044 and -045. • KD: xxx (for -040), xxx (for -041), xxx (for -042), xxx (for -043), xxx (for -044), xxx (for -045)
4)	Input the values of KE on the sheet provided with a new laser unit CK for SP2-115-001, -002, -005 and -006. • KE: xx (for -001), xx (for -002), xx (for -005), xx (for -006)
5)	Input the values of KF on the sheet provided with a new laser unit CK for SP2-152-001, -002, -003, -004 and -005. • KF: xxxx (for -001), xxxx (for -002), xxxx (for -003), xxxx (for -004), xxxx (for -005)
6)	Input the values of KG on the sheet provided with a new laser unit CK for SP2-152-006, -007, -008, -009 and -010. • KG: xxxx (for -006), xxxx (for -007), xxxx (for -008), xxxx (for -009), xxxx (for -010)
7)	Input the values of KH on the sheet provided with a new laser unit CK for SP2-152-011, -012, -013, -014 and -015. • KH: xxxx (for -011), xxxx (for -012), xxxx (for -013), xxxx (for -014), xxxx (for -015)
8)	Input the values of KJ on the sheet provided with a new laser unit CK for SP2-152-031, -032, -033, -034 and -035. • KJ: xxxx (for -031), xxxx (for -032), xxxx (for -033), xxxx (for -034), xxxx (for -035)
9)	Input the values of KK on the sheet provided with a new laser unit CK for SP2-152-036, -037, -038, -039 and -040. • KK: xxxx (for -036), xxxx (for -037), xxxx (for -038), xxxx (for -039), xxxx (for -040)

10)	Input the values of KL on the sheet provided with a new laser unit CK for SP2-152-041, -042, -043, -044 and -045. • KL: xxxx (for -041), xxxx (for -042), xxxx (for -043), xxxx (for -044), xxxx (for -045)
11)	Input the values of KM on the sheet provided with a new laser unit CK for SP2-105-001, -002, -003, -004, -005, -006, -007 and -008. • KM: xxx (for -001), xxx (for -002), xxx (for -003), xxx (for -004), xxx (for -005), xxx (for -006), xxx (for -007), xxx (for -008)
12)	Input the values of KN on the sheet provided with a new laser unit CK for SP2-105-009, -010, -011, -012, -013, -014, -015 and -016. • KN: xxx (for -009), xxx (for -010), xxx (for -011), xxx (for -012), xxx (for -013), xxx (for -014), xxx (for -015), xxx (for -016)
13)	Input the values of KO on the sheet provided with a new laser unit CK for SP2-130-001, -002, -003, -004, -005, -006, -007, and -008. • KO: xxx (for -001), xxx (for -002), xxx (for -003), xxx (for -004), xxx (for -005), xxx (for -006), xxx (for -007) and xxx (for -008).
14)	Input the values of KP on the sheet provided with a new laser unit CK for SP2-130-009, -010, -011, -012, -013, -014, -015 and -016. • KP: xxx (for -009), xxx (for -010), xxx (for -011), xxx (for -012), xxx (for -013), xxx (for -014), xxx (for -015) and xxx (for -016).

Input Procedure for Laser Unit YM

1)	Input the values of KB on the sheet provided with a new laser unit YM for SP2-102-056 and -066. • KB: xxx (for 2-101-003), xxx (for 2-101-004), xxx (for 2-102-056), xxx (for 2-102-066)
2)	Input the values of KC on the sheet provided with a new laser unit YM for SP2-102-050, -0051, -052, -053, -054 and -055. • KC: xxx (for -050), xxx (for -051), xxx (for -052), xxx (for -053), xxx (for -054), xxx (for -055)
3)	Input the values of KD on the sheet provided with a new laser unit YM for SP2-102-060, -061, -062, -063, -064 and -065. • KD: xxx (for -060), xxx (for -061), xxx (for -062), xxx (for -063), xxx (for -064), xxx (for -065)

4)	Input the values of KE on the sheet provided with a new laser unit YM for SP2-115-003, -004, -007 and -008. • KE: xx (for -003), xx (for -004), xx (for -007), xx (for -008)
5)	Input the values of KF on the sheet provided with a new laser unit YM for SP2-152-061, -062, -063, -064 and -065. • KF: xxxx (for -061), xxxx (for -062), xxxx (for -063), xxxx (for -064), xxxx (for -065)
6)	Input the values of KG on the sheet provided with a new laser unit YM for SP2-152-066, -067, -068, -069 and -070. • KG: xxxx (for -066), xxxx (for -067), xxxx (for -068), xxxx (for -069), xxxx (for -070)
7)	Input the values of KH on the sheet provided with a new laser unit YM for SP2-152-071, -072, -073, -074 and -075. • KH: xxxx (for -071), xxxx (for -072), xxxx (for -073), xxxx (for -074), xxxx (for -075)
8)	Input the values of KJ on the sheet provided with a new laser unit YM for SP2-152-091, -092, -093, -094 and -095. • KJ: xxxx (for -091), xxxx (for -092), xxxx (for -093), xxxx (for -094), xxxx (for -095)
9)	Input the values of KK on the sheet provided with a new laser unit YM for SP2-152-096, -097, -098, -099 and -100. • KK: xxxx (for -096), xxxx (for -097), xxxx (for -098), xxxx (for -099), xxxx (for -100)
10)	Input the values of KL on the sheet provided with a new laser unit YM for SP2-152-101, -102, -103, -104 and -105. • KL: xxxx (for -101), xxxx (for -102), xxxx (for -103), xxxx (for -104), xxxx (for -105)
11)	Input the values of KM on the sheet provided with a new laser unit YM for SP2-105-017, -018, -019, -020, -021, -022, -023 and -024. • KM: xxx (for -017), xxx (for -018), xxx (for -019), xxx (for -020), xxx (for -021), xxx (for -022), xxx (for -023), xxx (for -024)

12)	Input the values of KN on the sheet provided with a new laser unit YM for SP2-105-025, -026, -027, -028, -029, -030, -031 and -032. • KN: xxx (for -025), xxx (for -026), xxx (for -027), xxx (for -028), xxx (for -029), xxx (for -030), xxx (for -031), xxx (for -032)
13)	Input the values of KO on the sheet provided with a new laser unit YM for SP2-130-017, -018, -019, -020, -021, -022, -023 and -024. • KO: xxx (for -017), xxx (for -018), xxx (for -019), xxx (for -020), xxx (for -021), xxx (for -022), xxx (for -023) and xxx (for -024).
14)	Input the values of KP on the sheet provided with a new laser unit YM for SP2-130-025, -026, -027, -028, -029, -030, -031 and -032. • KP: xxx (for -025), xxx (for -026), xxx (for -027), xxx (for -028), xxx (for -029), xxx (for -030), xxx (for -031) and xxx (for -032).

5. Reset the "Area Magnification Correction" settings.

   For Laser Unit CK

   1) Input "1" in the following SP settings.
   - SP2-180-004 (for Cyan)
   - SP2-180-005 (for Magenta)
   - SP2-180-006 (for Yellow)

   For Laser Unit YM

   1) Input "1" in the following SP settings.
   - SP2-180-005 (for Magenta)
   - SP2-180-006 (for Yellow)

6. Reset the "Main Magnification Table" setting.

   1) Input "1" in the following SP settings.
   - SP2-180-007

7. Turn the machine off and on.
8. Clear the "MUSIC Result" setting.

   1) Execute SP2-180-003.

9. Execute the 2-point detection for each color.

   1) Execute SP2-184-001 (for Black), -002 (for Magenta), -003 (for Cyan) and -004 (for Yellow).

10. Enable 2-point detection.

    1) Change the setting value of SP2-186-001 to "1" (Auto).

11. Execute the manual MUSIC adjustment.

    1) Execute SP2-153-004 (rough adjustment)

2) Execute SP2-153-001 (fine adjustment)

12. Enable the automatic MUSIC and Process Control adjustment.
    1) Change the setting value of SP2-193-001 to "1" (Music ON).
    2) Change the setting value of SP3-501-001 to "0" (Procon ON).

Polygon Motor

⚠WARNING

- Turn off the main power switch and unplug the machine before performing any procedure in this section. Laser beams can seriously damage the eyes and cause permanent blindness. (☛page 58 "Correct Procedure to Turn Off the Power ")

Important

- **An accidental static discharge could damage the laser diode board attached to the lens block unit.**
- **Touch a metal surface to discharge any static electricity from your hands.**
- **The polygon motor rotates at extremely high speed and continues to rotate after you switch the machine off. To avoid damaging the motor, never remove the polygon motor within three minutes of switching off the main power and disconnecting the power plug.**
- **Do not touch any optical parts inside the LD unit.**

1. Toner hopper cover (☛page 380)
2. Laser unit bracket (☛page 363 "Laser Unit ")

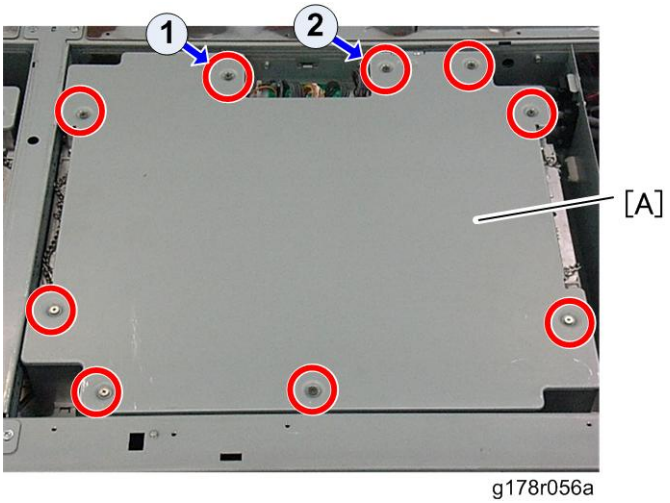

g178r056a

3. Laser unit top cover [A] (x 9)

Note

- When reassembling the laser unit top cover, make sure that the laser unit top cover does not pinch the chains at both sides of the laser unit.
- When reassembling the laser unit top cover, tighten screw ① first, then screw ②. After that, there is no order for tightening.

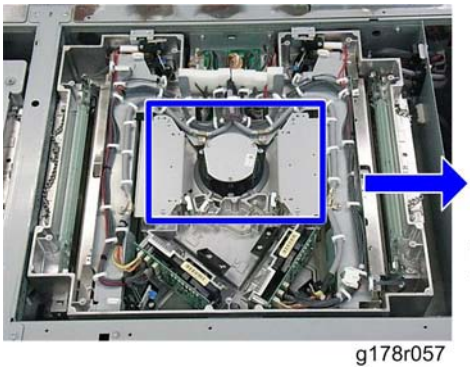

g178r057

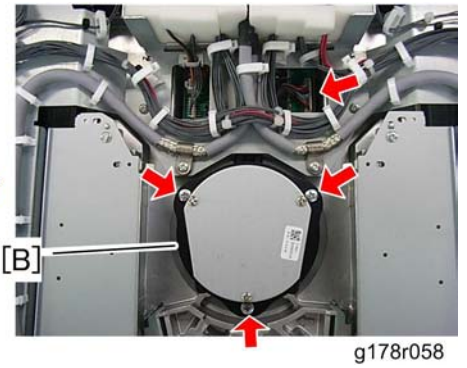

g178r058

4. Polygon motor [B] (x3, x1)

Note

- Do not loosen the screws on the polygon motor cover (silver).

Polygon Motor Drive Board

1. Toner hopper cover (page 380)
2. Laser unit bracket (page 363 "Laser Unit ")
3. Laser unit top cover (page 369 "Polygon Motor")

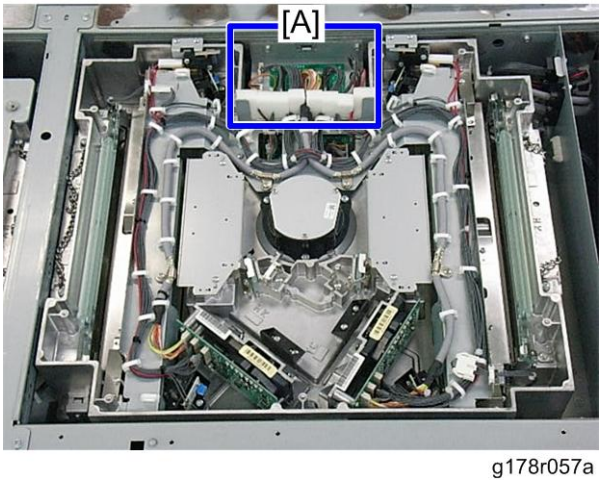

g178r057a

4. Disconnect all connectors [A] on the OPI board.

Note

- When reinstalling the laser unit, make sure that all harnesses [A] on the OPI board are connected firmly. Otherwise, an SC error may be issued.

5. Laser unit cover switch left bracket [B] and right bracket [C] (x 2 each)
6. Laser synchronizing detectors [D] [E] (x 1 each)
7. Disconnect the two harnesses and release the clamp.

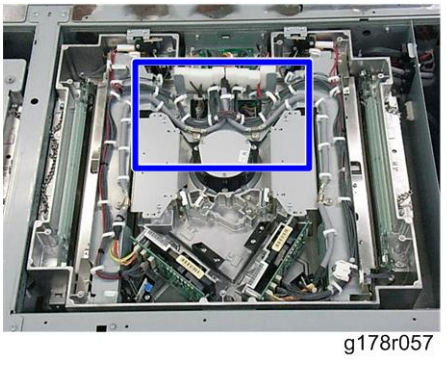

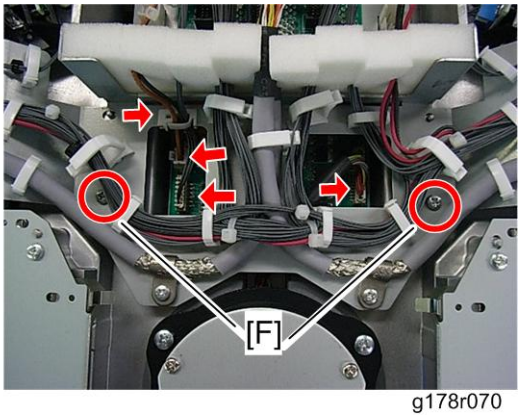

8. Remove the two screws [F].
9. Disconnect the three harnesses and release the clamp.

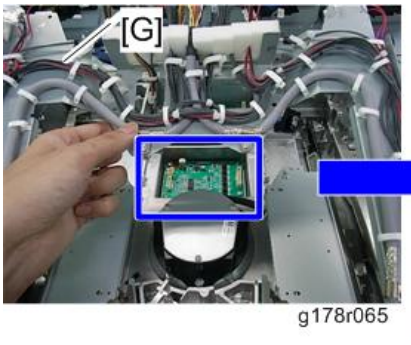

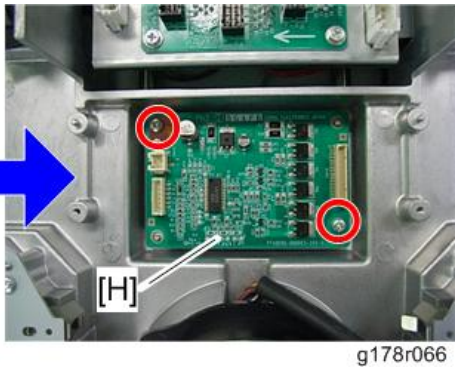

10. Lift the harness bracket [G].

11. Polygon motor drive board [H] (x 2)

LD Units

Important

- An accidental static discharge could damage the laser diode board attached to the lens block unit.
- Touch a metal surface to discharge any static electricity from your hands.
- The polygon motor rotates at extremely high speed and continues to rotate after you switch the machine off. To avoid damaging the motor, never remove the polygon motor within three minutes of switching off the main power and disconnecting the power plug.
- Do not touch any optical parts inside the LD unit.
- Moiré pattern may appear even followed the procedure in the service manual. If the moiré pattern appeared, replacement of whole laser unit is required. *1
- If LD unit(s) keep failing after replacing the LD unit(s), replacement of whole laser unit is required.

*1 image of moiré

Proper image

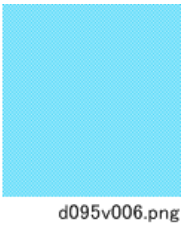

d095v006.png

Moiré image

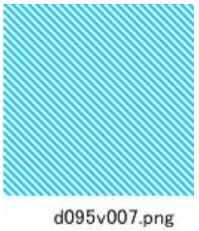

d095v007.png

1. Toner hopper cover (page 380)
2. Laser unit bracket (page 358 "Laser Unit")
3. Laser unit top cover (page 369 "Polygon Motor")

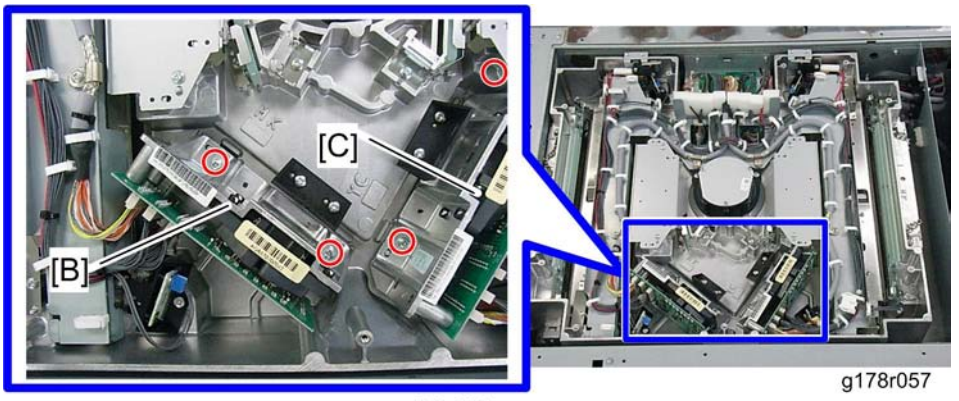

g178r063

g178r057

4. LD unit for Magenta or Black [B] (x 2, x 4)
5. LD unit for Yellow or Cyan [C] (x 2, x 4)

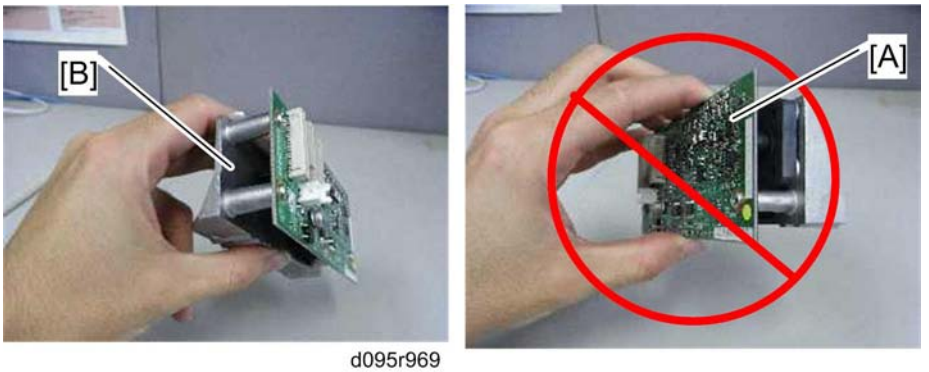

d095r969

Important

- Do NOT hold the PCB [A] of the LD unit when removing it. Hold the frame [B] of the LD unit.

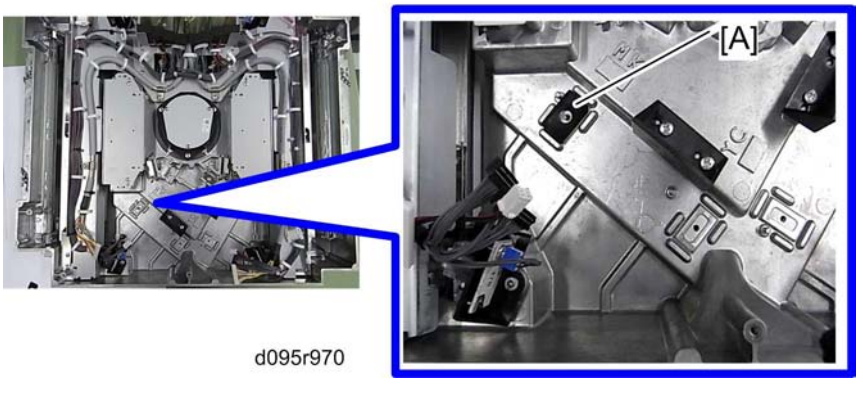

d095r970

Important

- **Do NOT remove the spacer(s) [A]. These spacers are applied to compensate for the deviation that is unique to each unit.**

When installing a new LD unit

1. Turn on the machine.
2. Enter the SP mode.
3. Disable the automatic MUSIC and Process Control adjustment by changing the SP2-193-001 value to "0" and SP3-501-001 to "1".
4. Disable the 2-point detection by changing the SP2-186-001 value to "0".
5. Input the LD unit adjustment settings for the replaced new LD unit referring to a sheet of paper, which is provided with a new LD unit.
   - LD unit for Yellow

1)	Input the values of **KB** on the sheet provided with a new LD unit Y for SP2-102-066. • **KB**: xxx (for 2-101-003), xxx (for 2-101-004), xxx (for 2-102-056), **xxx (for 2-102-066)**
2)	Input the values of **KD** on the sheet provided with a new LD unit Y for SP2-102-060, -061, -062, -063, -064 and -065. • **KD: xxx (for -060), xxx (for -061), xxx (for -062), xxx (for -063), xxx (for -064), xxx (for -065)**
3)	Input the values of **KE** on the sheet provided with a new LD unit Y for SP2-115-007 and -008. • **KE**: xx (for -003), xx (for -004), **xx (for -007), xx (for -008)**
4)	Input the values of **KN** on the sheet provided with a new LD unit Y for SP2-105-025, -026, -027, -028, -029, -030, -031 and -032. • **KN: xxx (for -025), xxx (for -026), xxx (for -027), xxx (for -028), xxx (for -029), xxx (for -030), xxx (for -031), xxx (for -032)**
5)	Input the values of **KP** on the sheet provided with a new LD unit Y for SP2-130-025, -026, -027, -028, -029, -030, -031 and -032. • **KP: xxx (for -025), xxx (for -026), xxx (for -027), xxx (for -028), xxx (for -029), xxx (for -030), xxx (for -031) and xxx (for -032)**.

   - LD unit for Cyan

1)	Input the values of **KB** on the sheet provided with a new LD unit C for SP2-102-046. • **KB**: xxx (for 2-101-001), xxx (for 2-101-002), xxx (for 2-102-036), **xxx (for 2-102-046)**
2)	Input the values of **KD** on the sheet provided with a new l LD unit C for SP2-102-040, -041, -042, -043, -044 and -045. • **KD**: **xxx (for -040), xxx (for -041), xxx (for -042), xxx (for -043), xxx (for -044), xxx (for -045)**
3)	Input the values of **KE** on the sheet provided with a new LD unit C for SP2-115-005 and -006. • **KE**: xx (for -001), xx (for -002), **xx (for -005), xx (for -006)**
4)	Input the values of **KN** on the sheet provided with a new LD unit C for SP2-105-009, -010, -011, -012, -013, -014, -015 and -016. • **KN**: **xxx (for -009), xxx (for -010), xxx (for -011), xxx (for -012), xxx (for -013), xxx (for -014), xxx (for -015), xxx (for -016)**
5)	Input the values of **KP** on the sheet provided with a new LD unit C for SP2-130-009, -010, -011, -012, -013, -014, -015 and -016. • **KP**: **xxx (for -009), xxx (for -010), xxx (for -011), xxx (for -012), xxx (for -013), xxx (for -014), xxx (for -015) and xxx (for -016)**.

- LD unit for Black

1)	Input the values of **KB** on the sheet provided with a new LD unit K for SP2-101-001 and -036. • **KB**: **xxx (for 2-101-001)**, xxx (for 2-101-002), **xxx (for 2-102-036)**, xxx (for 2-102-046)
2)	Input the values of **KC** on the sheet provided with a new LD unit K for SP2-102-030, -0031, -032, -033, -034 and -035. • **KC**: **xxx (for -030), xxx (for -031), xxx (for -032), xxx (for -033), xxx (for -034), xxx (for -035)**
3)	Input the values of **KE** on the sheet provided with a new LD unit K for SP2-115-001 and -002. • **KE**: **xx (for -001), xx (for -002)**, xx (for -005), xx (for -006)

4)	Input the values of **KM** on the sheet provided with a new LD unit K for SP2-105-001, -002, -003, -004, -005, -006, -007 and -008. • **KM: xxx (for -001), xxx (for -002), xxx (for -003), xxx (for -004), xxx (for -005), xxx (for -006), xxx (for -007), xxx (for -008)**
13)	Input the values of **KO** on the sheet provided with a new LD unit K for SP2-130-001, -002, -003, -004, -005, -006, -007, and -008. • **KO: xxx (for -001), xxx (for -002), xxx (for -003), xxx (for -004), xxx (for -005), xxx (for -006), xxx (for -007) and xxx (for -008)**.

- LD unit for Magenta

1)	Input the values of **KB** on the sheet provided with a new LD unit M for SP2-102-056. • **KB**: xxx (for 2-101-003), xxx (for 2-101-004), **xxx (for 2-102-056)**, xxx (for 2-102-066)
2)	Input the values of **KC** on the sheet provided with a new LD unit M for SP2-102-050, -0051, -052, -053, -054 and -055. • **KC: xxx (for -050), xxx (for -051), xxx (for -052), xxx (for -053), xxx (for -054), xxx (for -055)**
3)	Input the values of **KE** on the sheet provided with a new LD unit M for SP2-115-003 and -004. • **KE: xx (for -003), xx (for -004)**, xx (for -007), xx (for -008)
4)	Input the values of **KM** on the sheet provided with a new LD unit M for SP2-105-017, -018, -019, -020, -021, -022, -023 and -024. • **KM: xxx (for -017), xxx (for -018), xxx (for -019), xxx (for -020), xxx (for -021), xxx (for -022), xxx (for -023), xxx (for -024)**
13)	Input the values of **KO** on the sheet provided with a new LD unit M for SP2-130-017, -018, -019, -020, -021, -022, -023 and -024. • **KO: xxx (for -017), xxx (for -018), xxx (for -019), xxx (for -020), xxx (for -021), xxx (for -022), xxx (for -023) and xxx (for -024)**

6. Reset the "Main Magnification Table" setting by inputting "1" in SP2-180-007.
7. Turn off and on the machine.
8. Execute SP2-180-003 to clear the "MUSIC Result" setting.
9. Execute the 2-point detection for each color by executing SP2-184-001 (for Black), -002 (for Magenta), -003 (for Cyan) and -004 (for Yellow).
10. Enable the 2-point detection by changing the SP2-186-001 value to "1" (Auto).

11. Execute the manual MUSIC adjustment; SP2-153-004 (for rough adjustment) and SP2-153-001 (for fine adjustment).
12. Enable the automatic MUSIC and Process Control adjustment; set the SP2-193-001 value to "1" (Music ON) and SP3-501-001 value to "0" (Process Control ON).
13. Print a test page, and then check if the image quality is acceptable.

Laser Synchronizing Detector

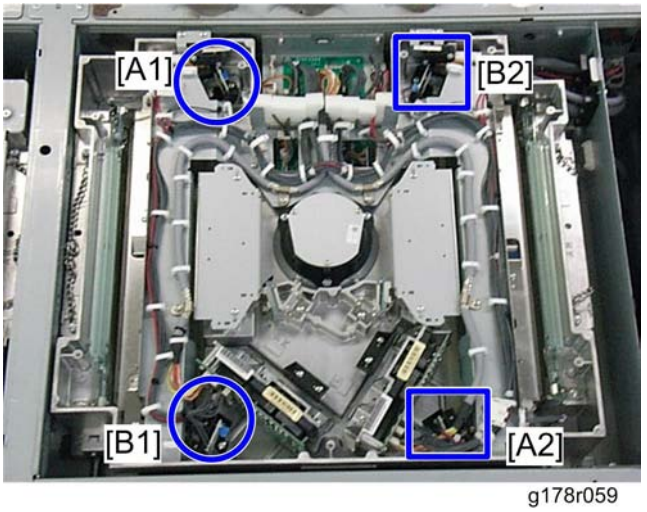

g178r059

Note

- A1: Leading edge detector for Y or C/ A2: Leading edge detector for K or M
- B1: Trailing edge detector for Y or C/ B2: Trailing edge detector for K or M

1. Toner hopper cover (☛page 380)
2. Laser unit bracket (☛page 369 "Polygon Motor")
3. Laser unit top cover (☛page 369 "Polygon Motor")

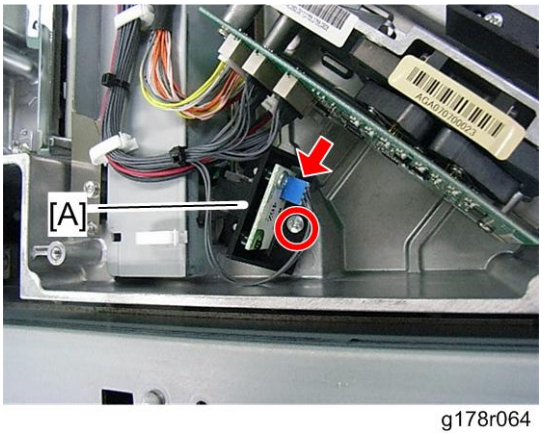

g178r064

4. Laser synchronizing detector [A] (x 1, x 1)

Note

- When re-installing the laser synchronizing detector, first connect the harness and then install it in the laser unit. This makes reassembly easier.

Toner Hopper

Toner Bottles

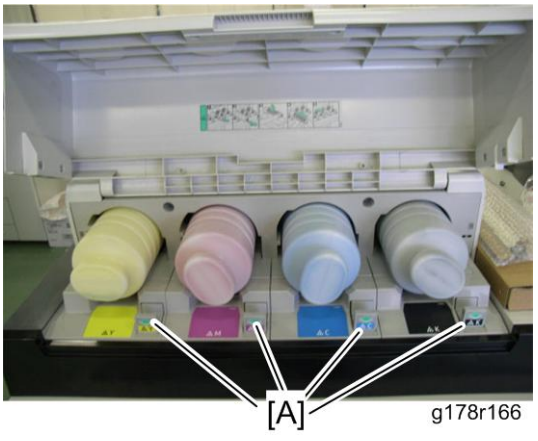

1. Open the toner hopper door.
2. Pull the toner lock lever [A].
3. Toner bottles

Cleaning Requirement

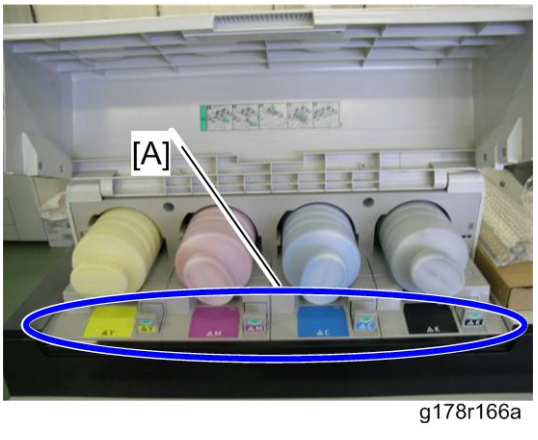

The area [A] shown above must be cleaned at 400 K intervals. Clean the area with a dry cloth.

Note

- Do not pull out toner bottles when you clean the area [A] unless a toner bottle is empty. Otherwise, toner from a toner bottle may scatter around this area.

Toner Hopper Cover

1. All toner bottles (page 379)
2. Front top cover (page 345)
3. Rear top cover (page 346)
4. Operation panel arm (page 348)

g178r078

5. Top right cover [A] (x 2)

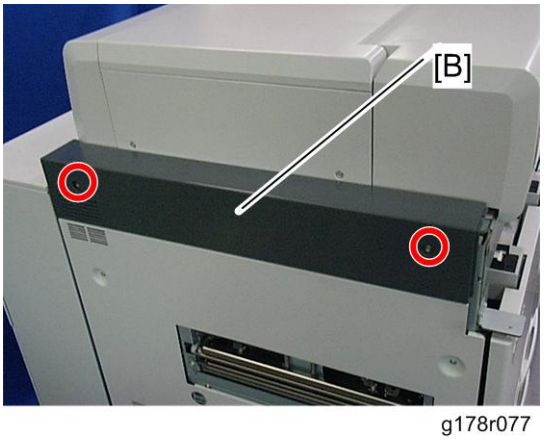

g178r077

6. Top left cover [B] (x 2)

g178r076

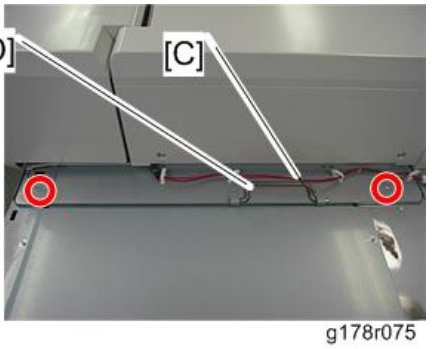

g178r075

7. Disconnect the harness [C] at the right side of the toner hopper unit.
8. Remove the four screws.
9. Hold the handles [D] of the toner hopper unit and then remove it.

Toner Hopper Door Switch

1. Top right cover (page 380 "Toner Hopper Cover")

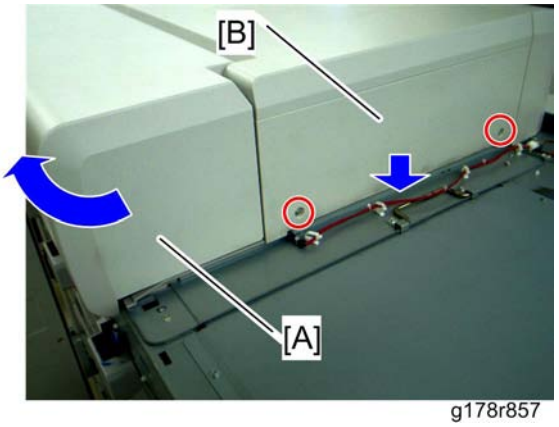

g178r857

2. Open the toner hopper door [A].
3. Toner hopper right cover [B] (x 2)

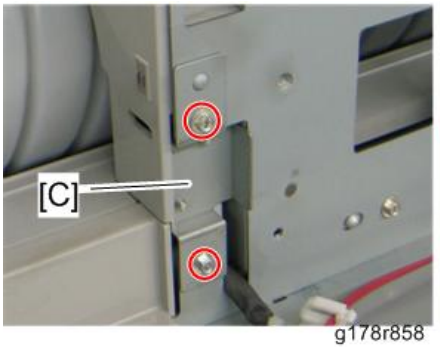

g178r858

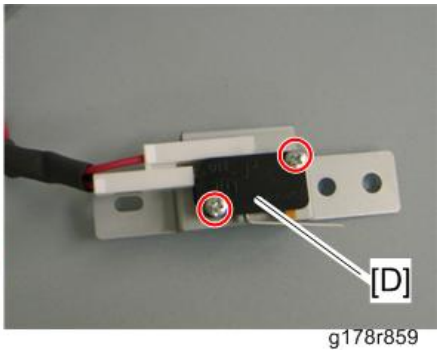

g178r859

4. Door switch bracket [C] (x 2)
5. Toner hopper door switch [D] (x 2, x 2)

RFID Board

1. Toner hopper cover (page 380)

g178r417

2. Toner hopper rear cover [A]

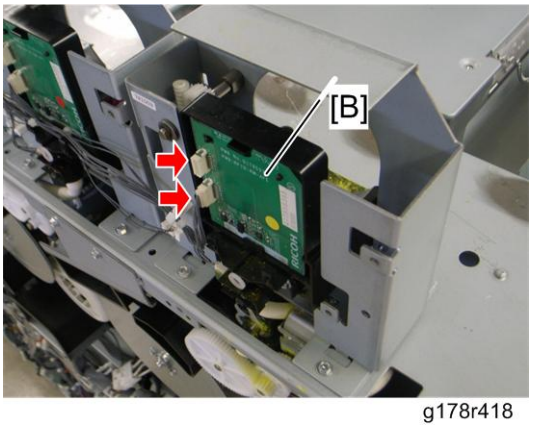

g178r418

3. RFID board [B] (☞ x 1 for yellow or ☞ x 2 for cyan, magenta or black, hooks)

Toner Bottle Motor

1. Toner hopper cover (☛page 380)
2. Toner hopper rear cover (☛page 382 "RFID Board")

g178r420

3. Remove the toner transport tube [A] and then clip it.

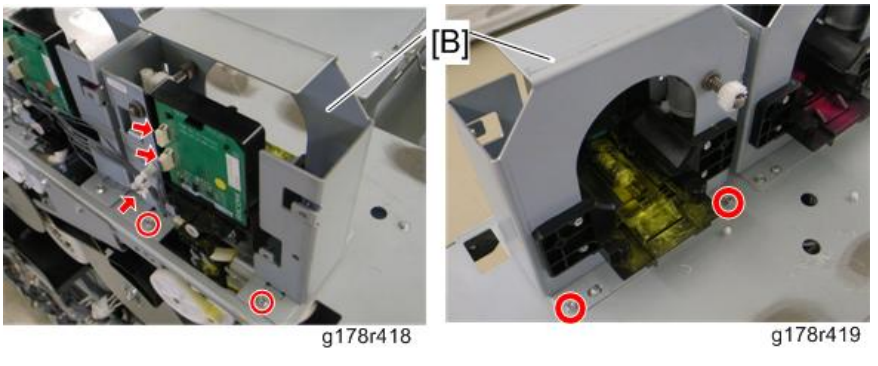

g178r418 g178r419

4. Toner hopper frame [B] (x 1, x 2: Yellow or x 3: other colors, x 4)

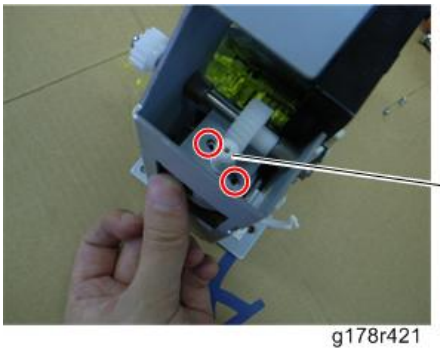

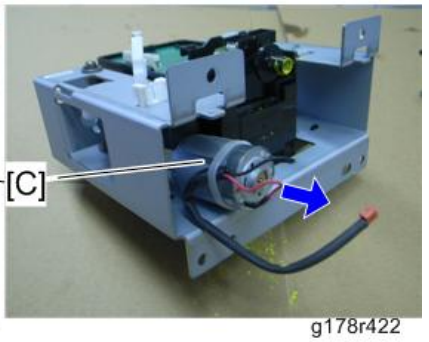

5. Toner bottle motor [C] (x 2, x 1)

Note

- Place the toner hopper frame on a sheet of paper because toner may fall from the toner hopper.

Lubricating the toner bottle motor gears

Lubricating the toner bottle motor gears is required at 2,400 K intervals. Apply grease (Barrierta - S552R) to the toner bottle motor gears following the procedure below.

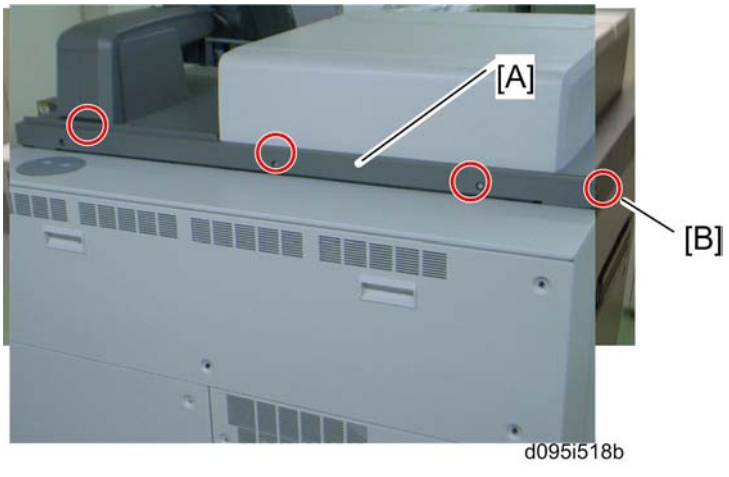

1. Rear top cover [A] (x 3)
2. Remove the screw [B] on the top left cover.
3. Stand behind the machine.

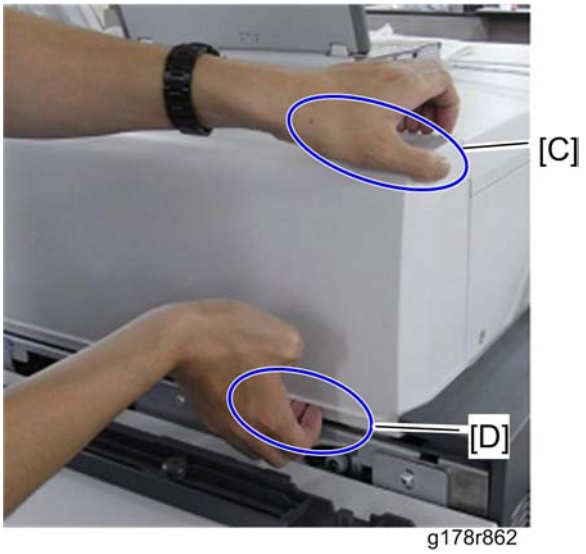

g178r862

4. Hold the top area [C] of the toner hopper rear cover with your left hand and the bottom area [D] with your right hand.

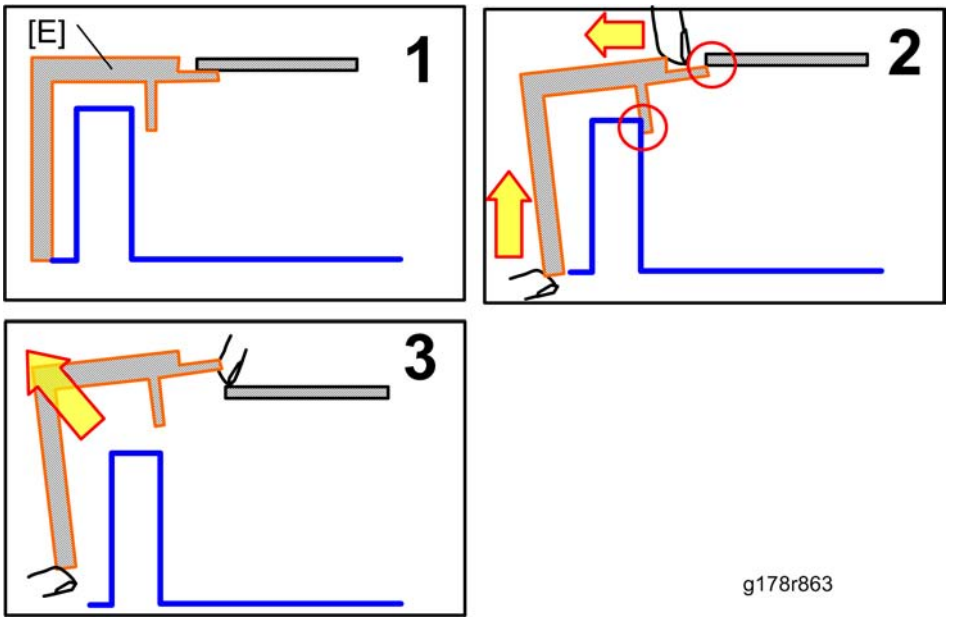

g178r863

5. Lift up the toner hopper rear cover [E] with your right hand, pulling the top area toward you to release the toner hopper cover.
6. Release the other side of the toner hopper cover using your other hand.
   - Use your right hand for the top area and left hand for the bottom area

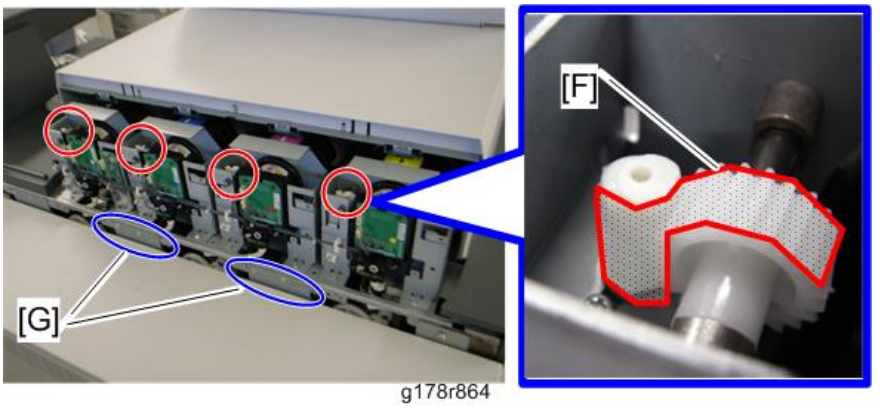

7. Apply grease (Barrerta - S552R) on the toner motor gears [F] so that the notches between the teeth of the gears are filled with grease.

⚠CAUTION

- Two brackets [G] project over the frame. When applying grease, be careful not to be injured.

Sub-Hopper Unit

IMPORTANT

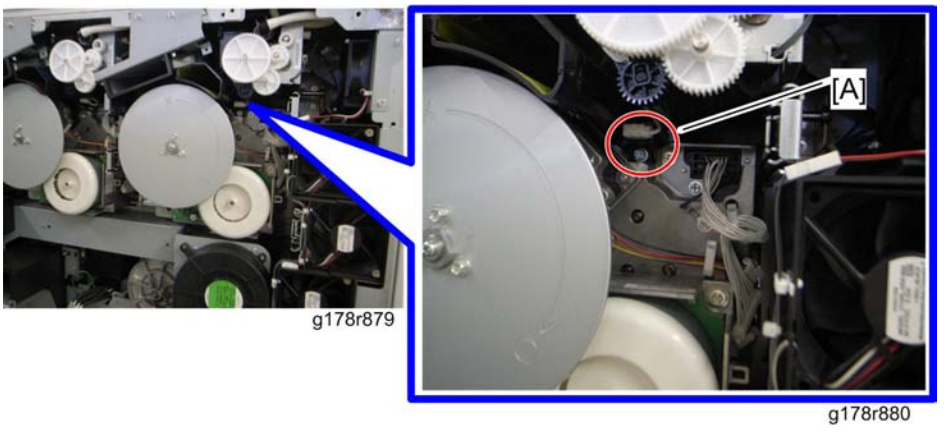

Do not remove the terminal case [A] of the development roller in this removal procedure. Removing the terminal case [A] is not necessary for this removal procedure. Be careful that the spring in the terminal case does not fall when removing the terminal case [A].

1. Remove the target color toner bottle.
2. Pull out the target PCDU drawer (☛page 397 "Drum Cleaning Unit").

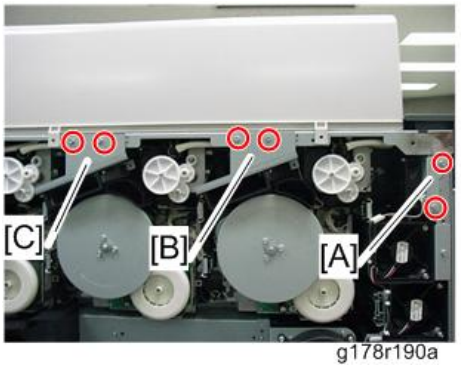

g178r190a

g178r191a

3. Fusing fan 4 [A] (x 2, x 1) for yellow sub-hopper unit removal
4. Development fan bracket(s) (x 2, x 1 each)
   - For yellow, remove the development fan bracket [B] immediately to right of the yellow sub-hopper unit.
   - For other colors, remove the development fan brackets [B] and [C] on both sides of the black, magenta or cyan sub-hopper unit.

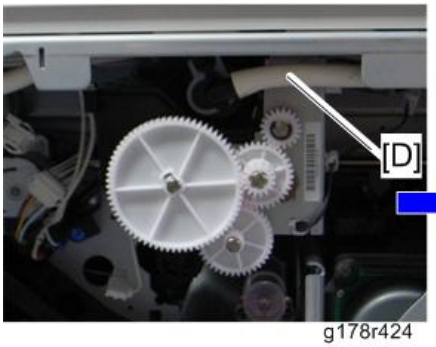

g178r424

g178r425

5. Remove the toner transport tube [D] and then close the end with a clip.

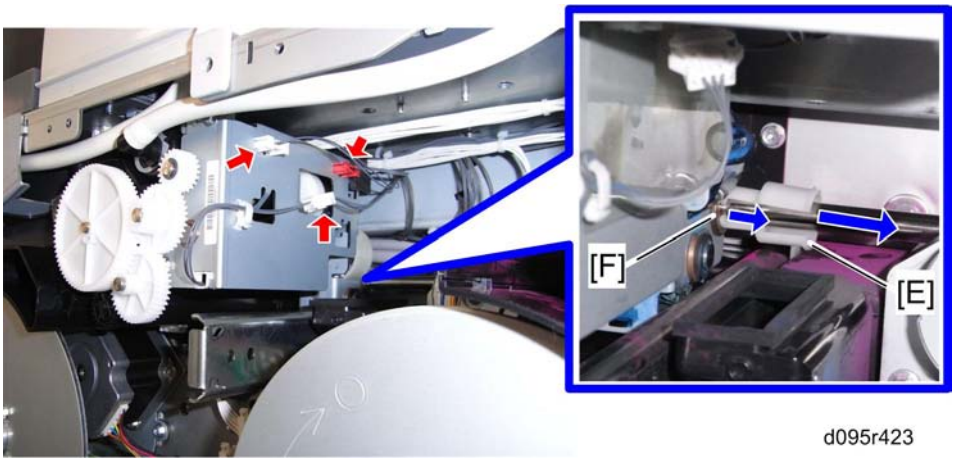

d095r423

6. Disconnect the three connectors, and then slide the stopper [E] to the right-hand side.

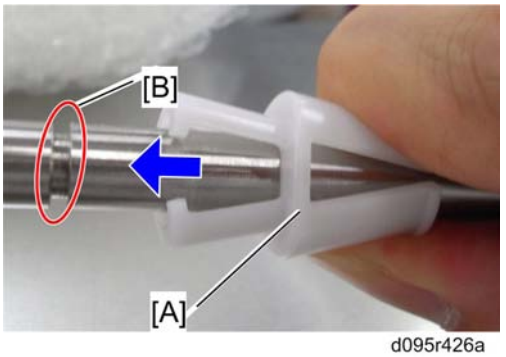

d095r426a

NOTE:

Do not leave the stopper [A] as shown above for a long time, or the stopper's shape may be deformed.

- If the sub-hopper unit has to be removed for a long time, slide the stopper to the groove [B] temporarily before reinstalling the sub-hopper unit.

7. Slide the bushing [F] to the right-hand side.

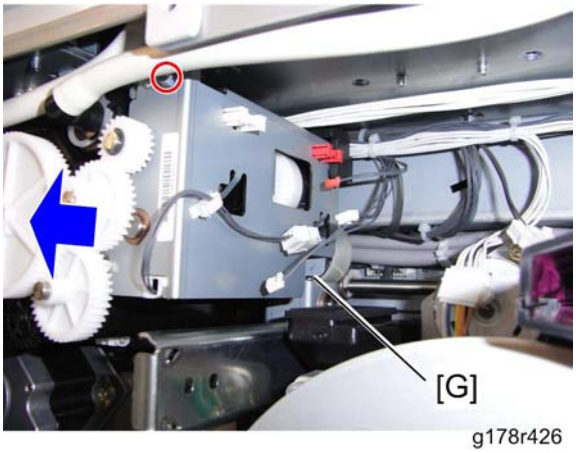

g178r426

8. Pull the sub-hopper unit [G] toward the rear side (x 1).

Lubrication for the sub-hopper gears

This lubrication procedure must be done at 3,200 K interval or after a new sub-hopper unit is installed.

1. Remove the fusing fan 4 and other development fan brackets.

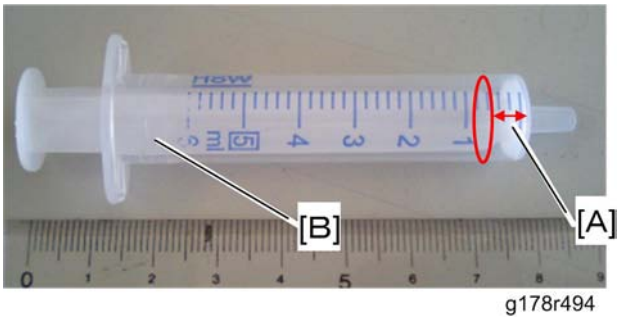

g178r494

2. Put 0.5 ml [A] of "Grease Barrierta" in the grease dispenser [B].

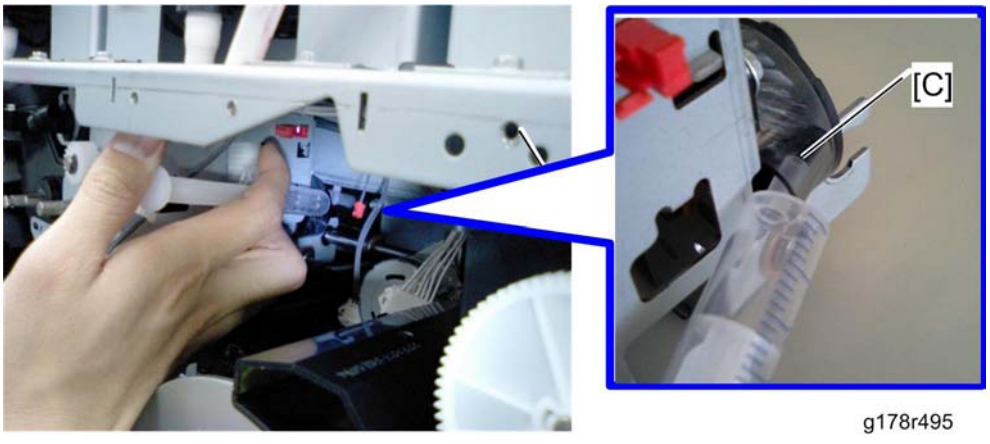

g178r495

3. Insert the grease dispenser into the opening [C] of the each sub-hopper unit, and then push the grease dispenser to put grease into the sub-hopper gear.
4. Put grease into all gears of the sub-hopper units (YMCK).

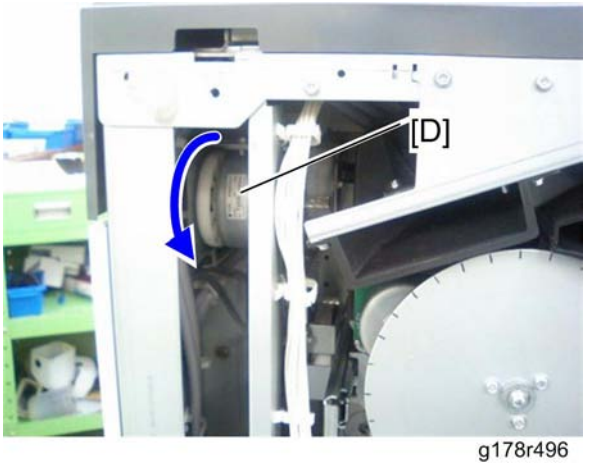

g178r496

5. Rotate the toner supply motor [D] by three or four rotations.
6. Repeat steps from 2 to 5.

After installing new sub-hopper unit

Toner must be supplied to a new sub-hopper unit which you have replaced. Follow the procedure below.

1. Turn on the main power switch of the machine.
   - To access this switch, you must open the front left door.
2. Enter the SP2253-xxx with the front left door open.
3. Select the SP number from -001 to -006 depending on which color's sub-hopper unit has been removed.
   - -001: Black, -002: Cyan, -003: Magenta, -004: Yellow, -005: Color (CMY), -006: All colors (KCMY)
4. Press "Execute" to transport toner to the sub-hopper(s).
   - It may take several minutes (approximately 5 to 10 min.) to fill the sub-hopper(s).
5. Exit the SP mode after "Completed" is displayed.
1. Close the front left door. Machine warm-up starts automatically, followed by process control.

   Note

   - Do not turn off the machine during the warm-up. It takes about 6 minutes to complete this process.
2. "Ready" appears on the LCD after the warm-up is complete.

Toner Supply Clutch

1. Sub-hopper unit (page 386)

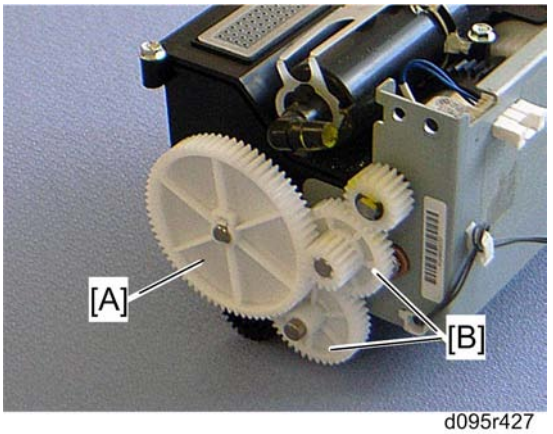

d095r427

2. Drive gear [A] (hook) and idle gears [B].

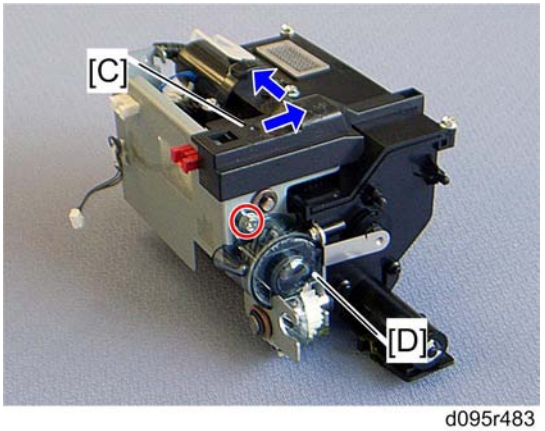

d095r483

3. Upper gear cover [C] (hook)
4. Lower gear cover [D] (x 1)

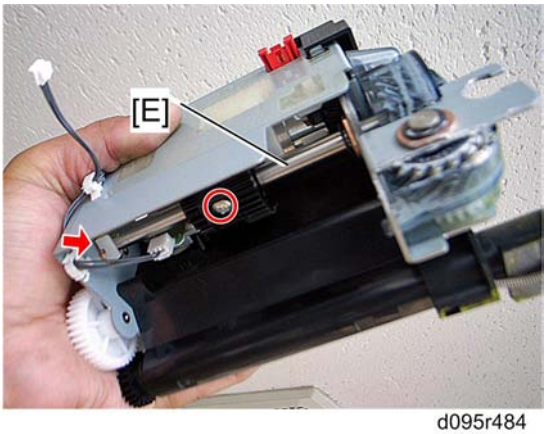

d095r484

5. Make the shaft [E] free (x 1, x 1).

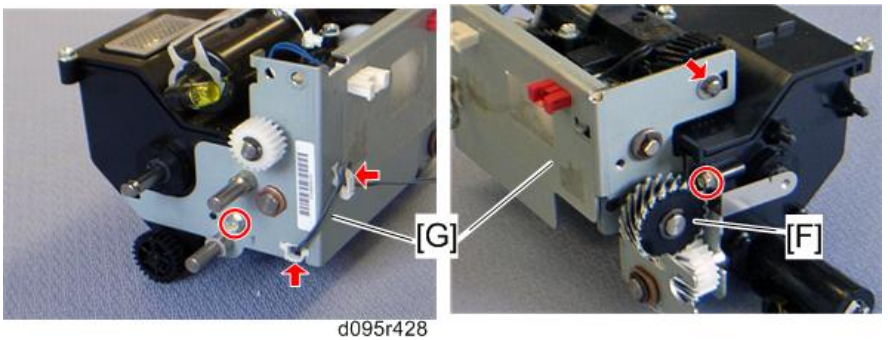

d095r428

6. Gear [F] (x 1)
7. Sub-hopper frame [G] (x 2, x 1)

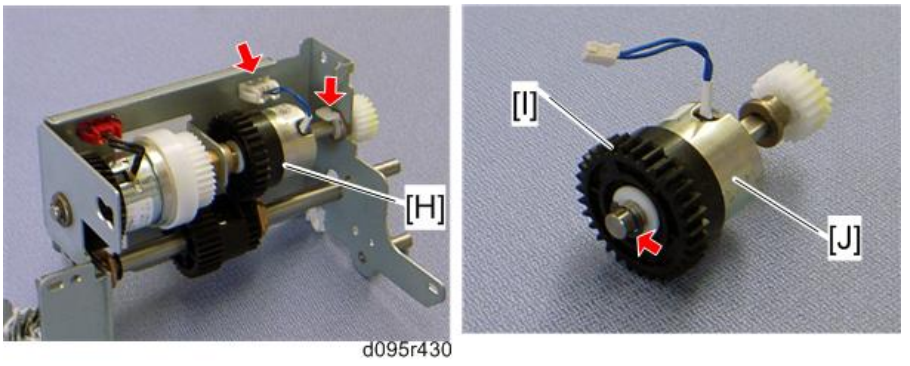

8. Toner supply clutch unit [H] (x 1, x 1, bushing x 1)
9. Toner supply clutch gear [I] (x 1)
10. Toner supply clutch [J]

Toner Pump Clutch

1. Sub-hopper unit (page 386)
2. Toner supply clutch unit (page 390)

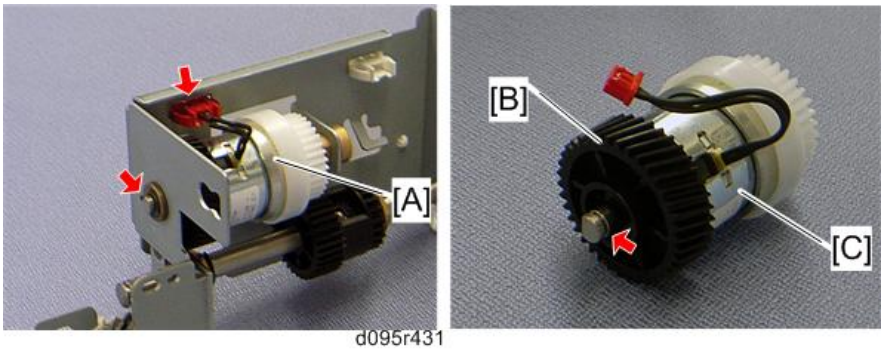

3. Toner pump clutch unit [A] (x 1, x 1, bushing x 2)
4. Toner pump clutch gear [B] (x 1)
5. Toner pump clutch [C]

Toner End Sensor

1. Sub-hopper unit (page 386)
2. Drive gear and idle gears (page 390 "Toner Supply Clutch")
3. Sub-hopper frame (page 390 "Toner Supply Clutch")

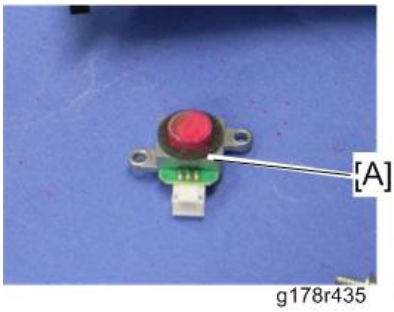

g178r435

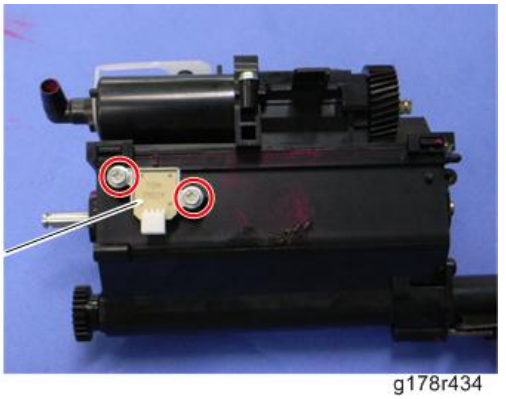

g178r434

4. Place the sub-hopper with the toner end sensor [A] facing upward.
5. Toner end sensor [A] (x 2)

Note

- Keep the toner end sensor [A] facing upward while you remove the toner end sensor. Otherwise, toner may spill out from the sub-hopper.

Toner Supply Motor

1. Open the rear controller box (page 354).

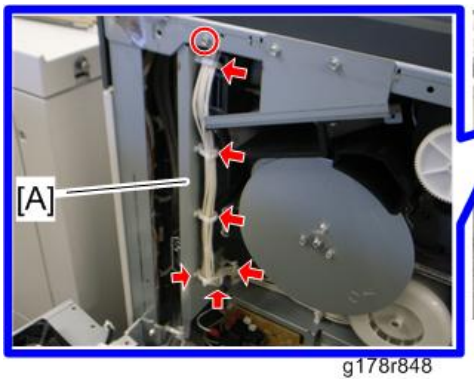

g178r848

g178r850

2. Harness guide bracket [A] (x 1, x 6)

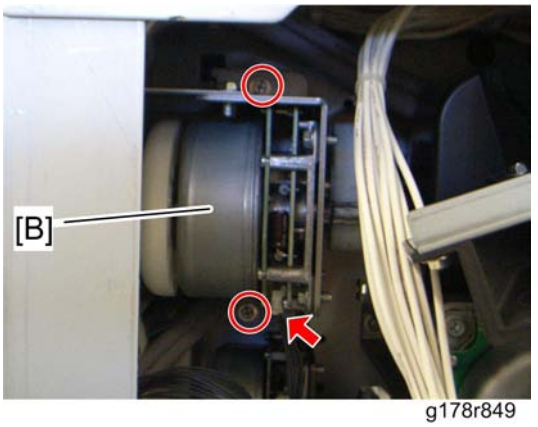

g178r849

3. Toner supply motor bracket [B] (x 2, x 1)

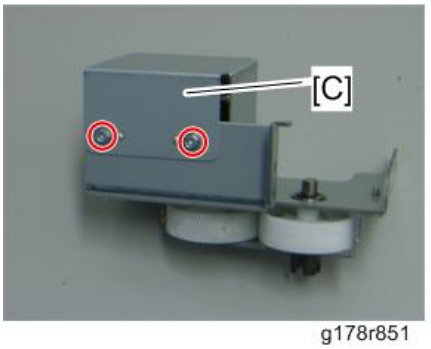

g178r851

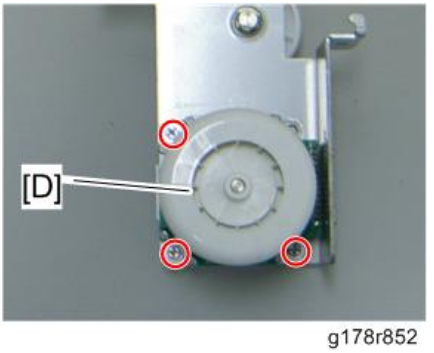

g178r852

4. Motor cover [C] (x 2)
5. Toner supply motor [D] (x 3)

Waste Toner Transport Motor 1

1. Open the rear controller box (page 354).

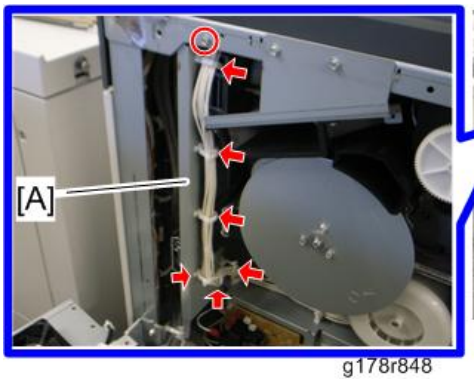

g178r848

g178r850

2. Harness guide bracket [A] (x 1, x 6)

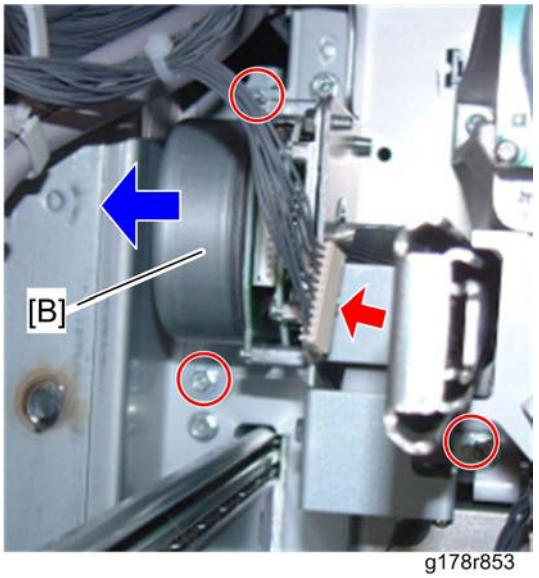

g178r853

3. Move the waste toner transport motor 1 bracket [B] to the left-hand side, and then remove it (x 3, x 1).

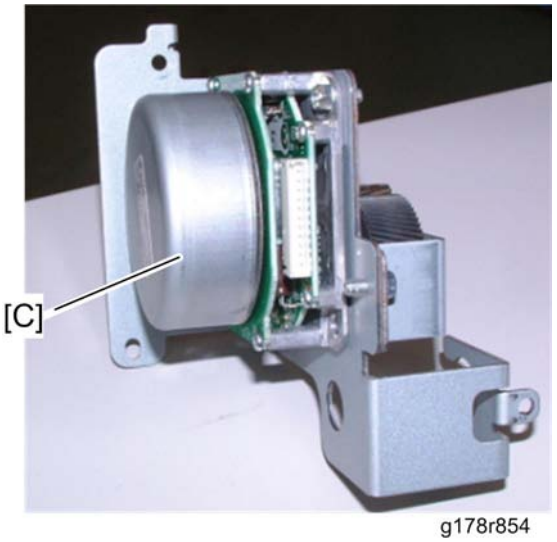

g178r854

4. Waste toner transport motor 1 [C] (x 3)

Waste Toner Transport Motor 2 and Sensor

1. Open the rear controller box (page 354).
2. Open the IOB 2 bracket (page 587 "IOB Brackets").

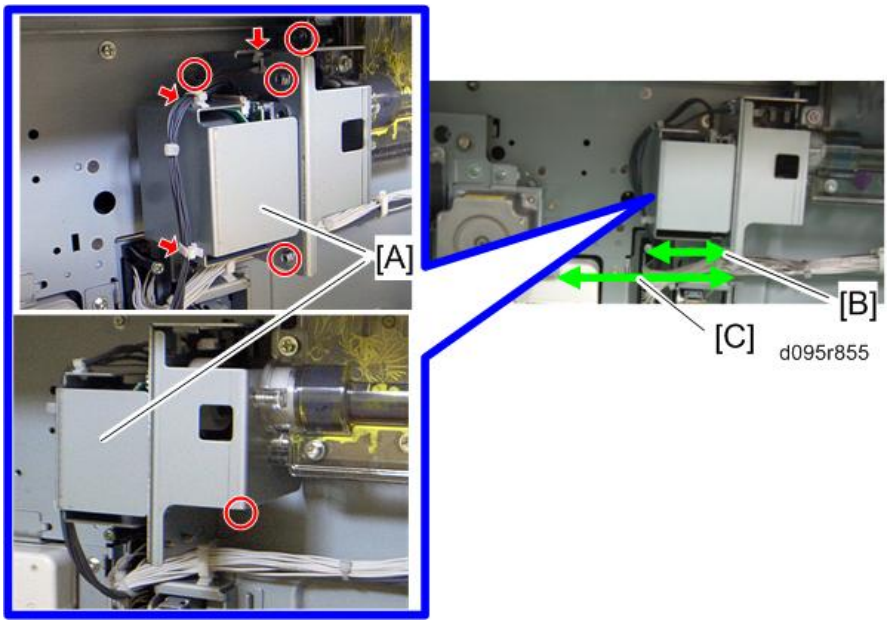

3. Waste toner transport motor 2 bracket [A] (x 5, x 2, x 3)
   - A proper screwdriver or ratchet is necessary to remove this bracket.

     Head [B]: 70 mm or more, Full length [C]: 120 mm or less

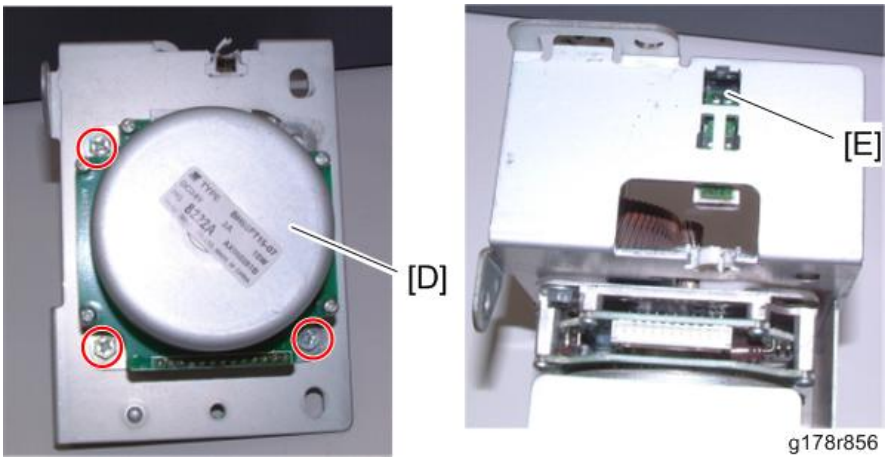

4. Remove:
   - Waste toner transport motor 2 [D] (x 3)
   - Waste toner transport motor 2 sensor [E] (hooks)

Image Creation

Important

- For some PM parts, automatic adjustment will be executed after clearing the PM counter (☛ page 319 "Initializing PM Parts"). Open one of the front doors, and then close it after clearing the PM counter. The door open/close will execute the automatic adjustment for the replaced PM parts.

Charge Corona Unit

1. Open the left and right front door.
2. Front top cover (☛page 345)

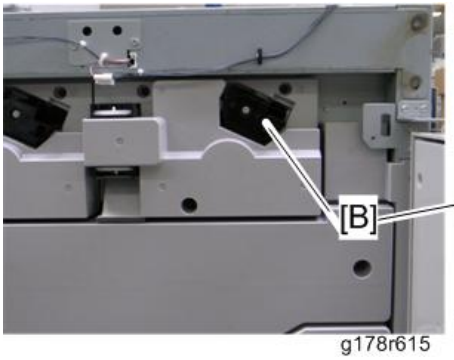

g178r615

g178r617

3. Press down the lock lever [A].
4. Charge corona unit [B]

Note

- When installing the charge corona unit, push the charge corona unit until you hear click sound. Otherwise, SC3xx may be issued.

After installing a new charge corona unit

Clear the PM counter for the charge corona unit. See "PM Parts Screen Details" in the chapter "Preventive Maintenance".

Drum Cleaning Unit

1. Front top cover (☛page 345)
2. Charge corona unit (☛page 397)

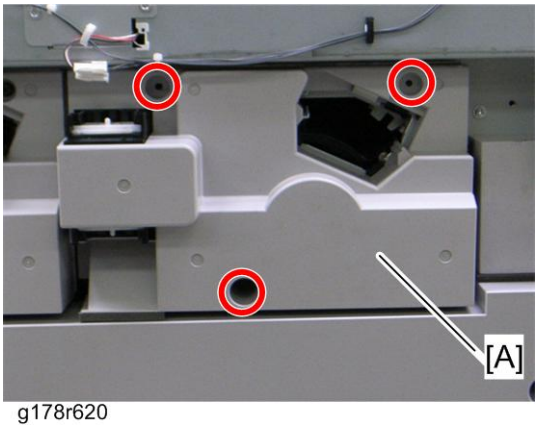

g178r620

3. Inner cover [A] for the PCDU drawer (x 3)

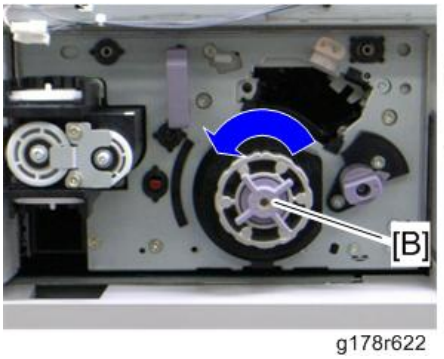

g178r622

g178r623

4. Rotate the drawer stop knob [B] counterclockwise, and then remove it.
5. Pull out the PCDU drawer [C].

Note

- Use a sheet of clean paper to cover the slit of the Drum Unit where the drum is visible. This protects the photo-sensitive surface of the drum from overhead light and direct sunlight.

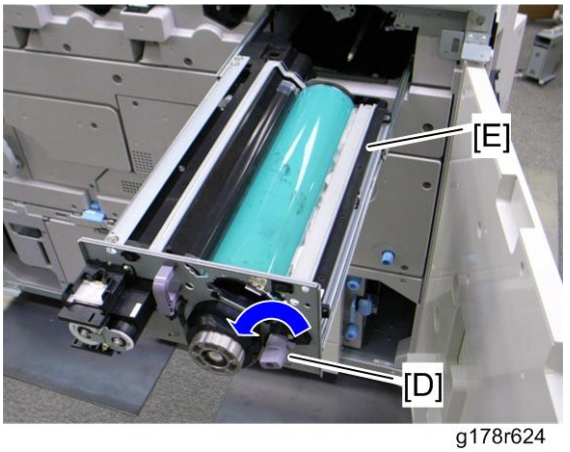

g178r624

6. Turn the drum cleaning unit lock lever [D] counterclockwise.
7. Drum cleaning unit [E]

Note

- Correct Procedures for Fastening the Drum Knob
- Take note of the information described in the following section to avoid the problems listed below.

1. Different density between left and right sides on a page
2. Toner adhesion to the development rollers
3. Scratches on the drums resulting from toner adhesion to the development rollers
4. Toner clumps caused by narrowed PG

- Always pull out the developer unit and remove the drum cleaner when fastening the drum knob.
- Never attempt to further fasten the drum knob when the drum cleaning unit is installed.

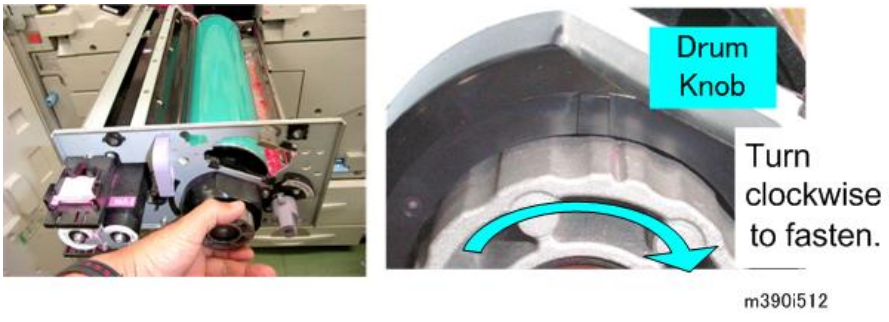

- Do NOT fasten the drum knob when the developer unit is installed.
- Do NOT fasten the drum knob when the drum cleaning unit is installed.

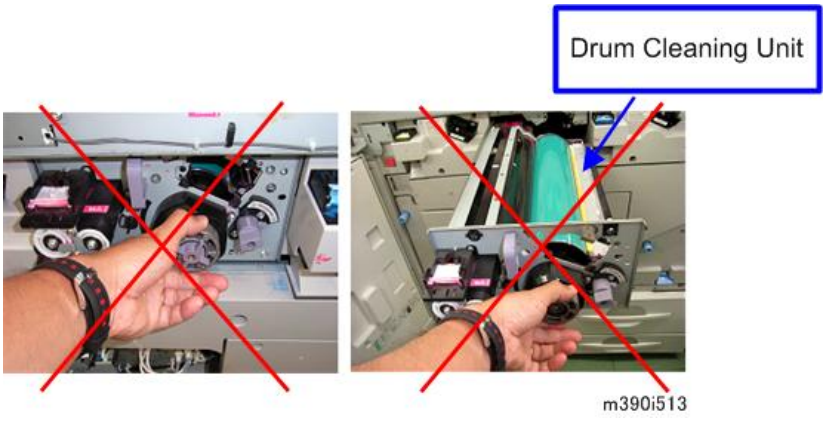

- If the drum knob is loosened with the drum cleaning unit installed, make sure to remove the drum cleaning unit, and then fasten the knob.
- Fastening the drum knob with the drum cleaning unit installed will cause the drum cleaning unit to apply pressure to the drum and narrow the PG at the front side.

- Tighten the Drum Knob so that the groove on the Drum Knob goes past the plastic protrusion on the PCDU as shown in the photo below.

Correct Drum Knob Position

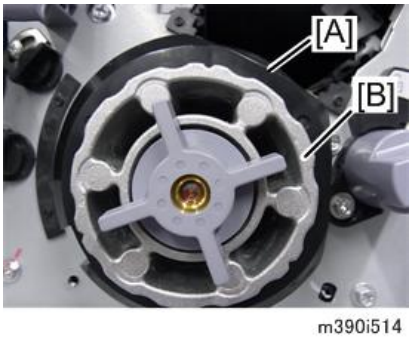

m390i514

A	Plastic Protruding on the PCU
B	Position of the groove on the drum knob goes past the plastic protruding - Good

Incorrect Drum Knob Position

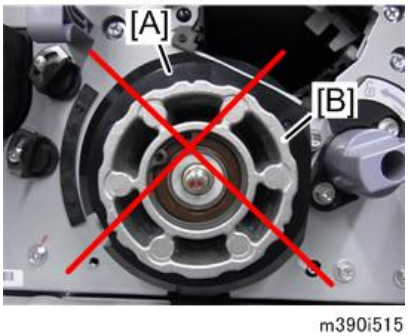

m390i515

A	Plastic protruding on the PCU
B	Position of the groove does not pass the plastic protruding. Not Good

Cleaning Requirement at PM Replacement

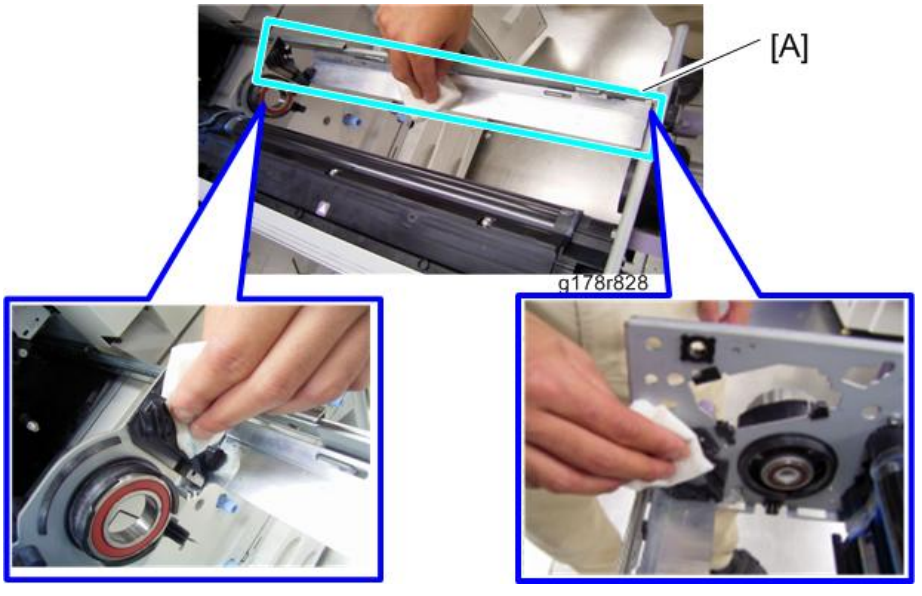

- Clean the bottom frame [A] of the development unit drawer with a dry cloth at every drum cleaning unit replacement.

When installing a new drum cleaning unit

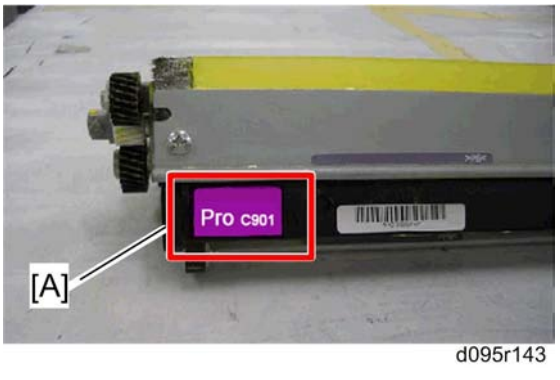

Check that the "Pro C901" decal is attached to the cleaning unit. The drum cleaning unit with the "Pro C901" decal can be used for the Pro C901 and Pro C901S models. Never use a drum cleaning unit for predecessor models. If the wrong type of drum cleaning unit is installed, image problems may occur due to insufficient drum cleaning.

After installing a new drum cleaning unit

1. After you replace the cleaning unit, always coat the drum with Lubricant Powder B1329700. For more, see "Lubricating the Drum". This must be done even if the drum is not replaced.
2. Clear the PM counter for the drum cleaning unit. See "PM Parts Screen Details" in the chapter "Preventive Maintenance".

Drum Lubricant Blade

1. Drum cleaning unit (☛page 397)

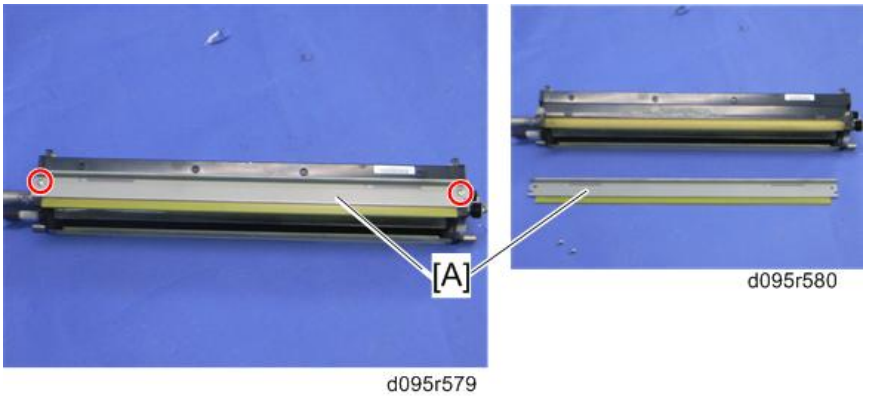

2. Drum lubricant blade [A] (x 2)

After installing a new drum lubricant blade

Clear the PM counter for the drum lubricant blade. See "PM Parts Screen Details" in the chapter "Preventive Maintenance".

Drum Cleaning Gears

1. Drum cleaning unit (☛page 397)

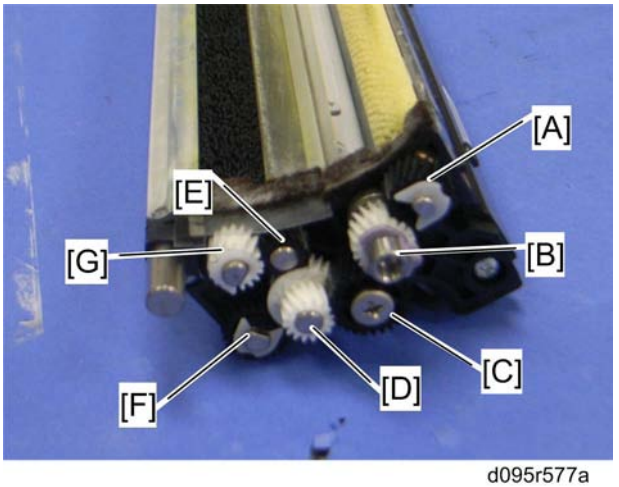

d095r577a

2. Lubricant brush roller gear [A] (x 1)
3. Idle gear (Z-19) [B] (x 1)
4. Idle gear (Z-27) [C] (x 1)
5. Idle gear (Z-22 to -16) [D]
6. Idle gear (Z-16) [E]
7. Toner collection roller gear [F] (x 1)
8. Drum cleaning brush roller gear [G] (x 1)

After installing new drum cleaning gears

Clear the PM counter for the drum cleaning Gear: Y, M, C or K. See "PM Parts Screen Details" in the chapter "Preventive Maintenance".

Drum Lubricant Bar and Drum Lubricant Brush Roller

1. Drum cleaning unit (page 397)
2. Drum lubricant blade (page 402)

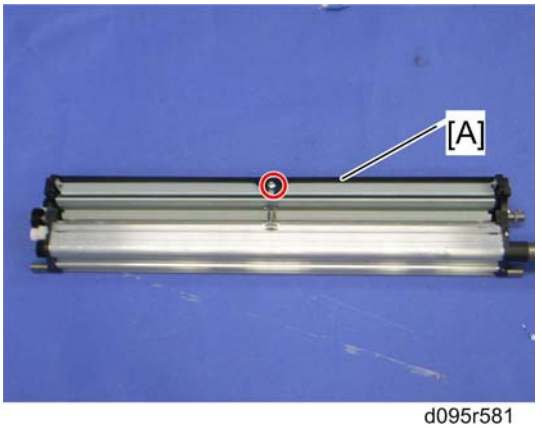

d095r581

3. Top cover [A] (x 1)

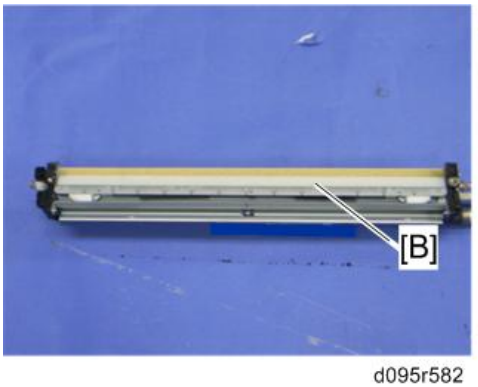

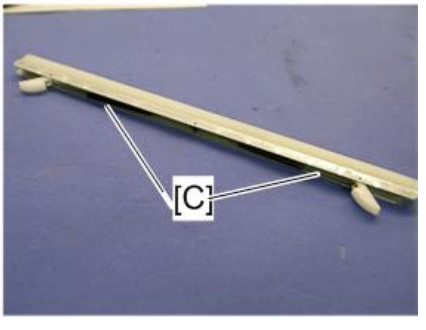

d095r582

4. Lubricant bar [B]
   - A new lubricant bar does not have two springs [C]. Remove these springs form the old lubricant bar when installing a new lubricant bar.

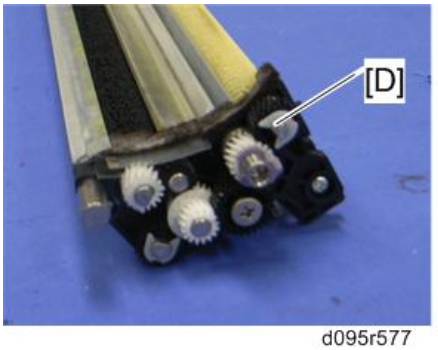

d095r577

d095r578

5. Gear [D] (x 1) and bushing [E] (x 1)

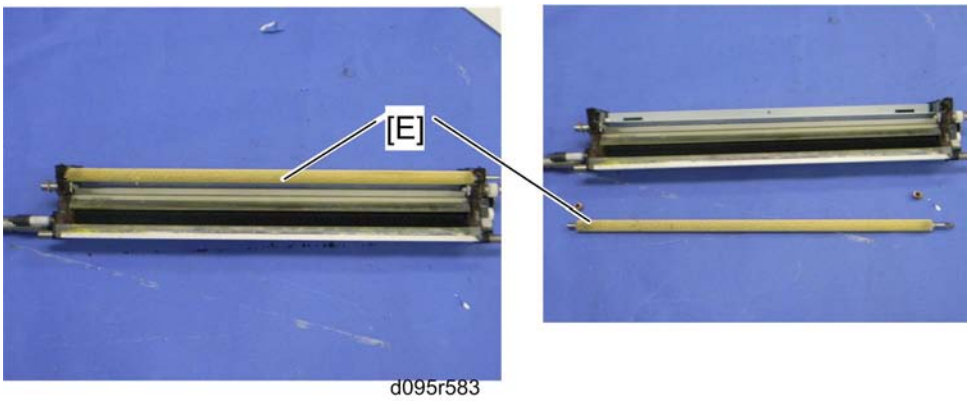

6. Drum lubricant brush roller [E]

Important

- A new drum lubricant brush roller for the Pro C901 and Pro C901S is white. Do not use a drum lubricant roller which is black when installing a new drum lubricant roller.

After installing a new drum lubricant bar and drum lubricant brush roller

Clear the PM counter for the drum lubricant bar and drum lubricant brush roller. See "PM Parts Screen Details" in the chapter "Preventive Maintenance".

Drum Cleaning Blade

1. Drum cleaning unit (☛page 397)
2. Drum lubricant blade (☛page 402)
3. Drum lubricant bar and drum lubricant brush roller (☛page 403)

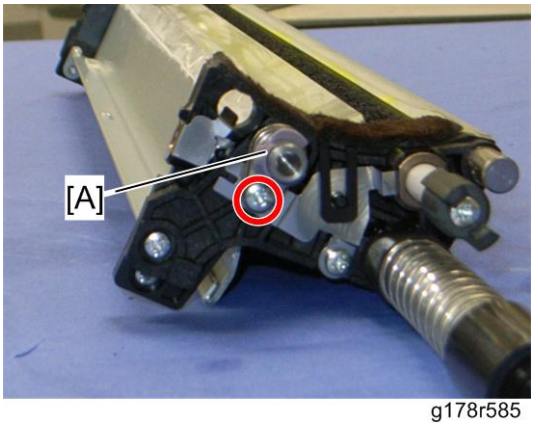

4. Pivot bracket [A] (x 1)

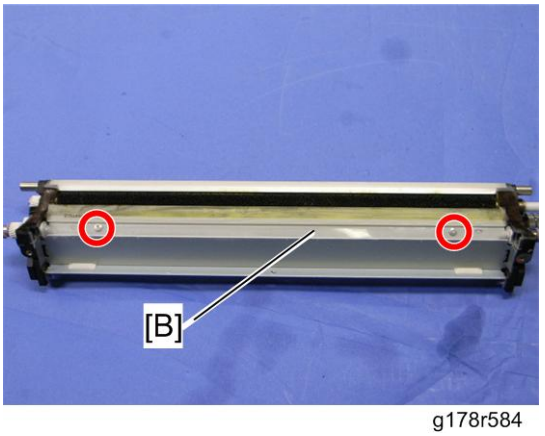

g178r584

5. Drum cleaning blade [B] (x 2)

After installing a new drum cleaning blade

1. After you replace the cleaning blade, always coat the drum with Lubricant Powder B1329700. For more, see "Lubricating the Drum". This must be done even if the drum is not replaced.
2. Clear the PM counter for the drum cleaning blade. See "PM Parts Screen Details" in the chapter "Preventive Maintenance".

Drum Cleaning Brush Roller

1. Drum cleaning unit (page 397)
2. Drum lubricant blade (page 402)
3. Drum lubricant bar and drum lubricant brush roller (page 403)
4. Drum cleaning blade (page 405)

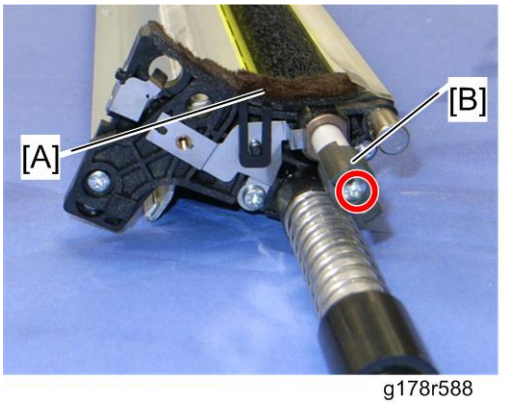

g178r588

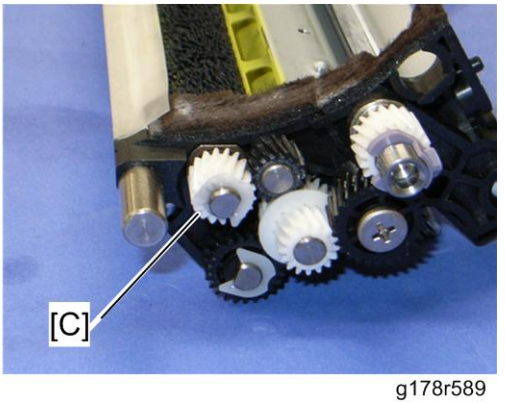

g178r589

5. Roller stopper [A] (hook)

6. Rear gear [B] (x 1)
7. Gear [C] (x 1)

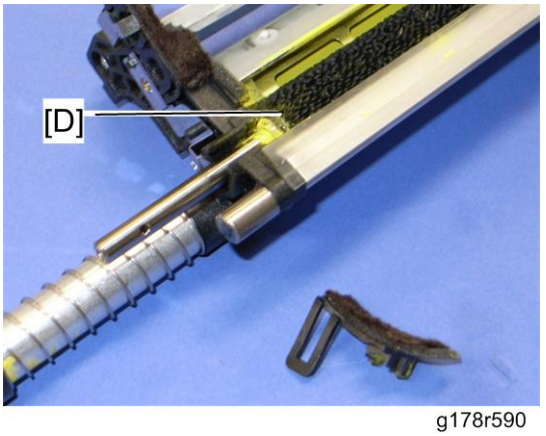

g178r590

8. Drum cleaning brush roller [D]

After installing a new drum cleaning brush roller

Clear the PM counter for the drum cleaning brush roller. See "PM Parts Screen Details" in the chapter "Preventive Maintenance".

Drum Unit

Note

- Do not touch the OPC drum. Do not let metal objects touch the development sleeve.
- To prevent drum scratches, remove the charge corona unit before pulling out the drum.

1. PCDU drawer (page 397 "Drum Cleaning Unit")

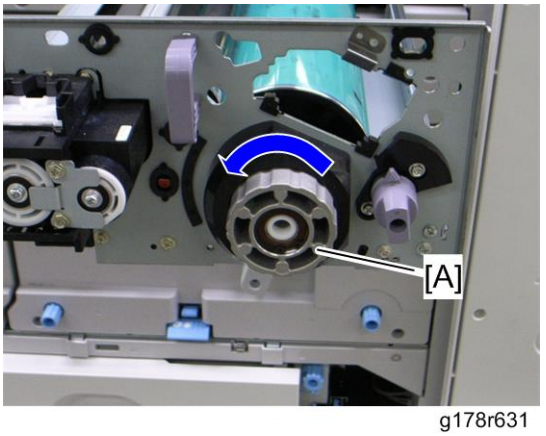

g178r631

2. Turn the drum lock nut [A] counterclockwise.

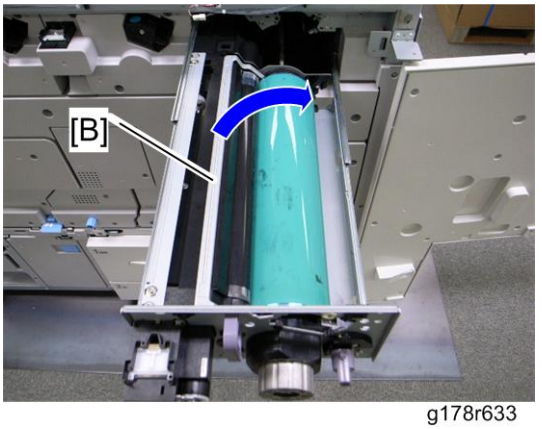

g178r633

3. Rotate the drum unit [B] as shown above, and remove it.

Important

- **When installing a new drum unit, hold both sides of the drum unit to carry it. The drum can fall if you just hold the handle of the drum unit.**

Reassembling the Drum Unit

The gap between the drum and development roller is precisely adjusted at the factory. However, this gap may be uneven if the drum unit is not correctly installed in the PCDU drawer after installing or replacing the drum unit. The uneven gap between the drum and the development roller may cause some image problems (white spots, uneven toner density, toner blocking in the strips on the development roller and so on). Follow the important point for the drum unit installation as described below.

Important Point

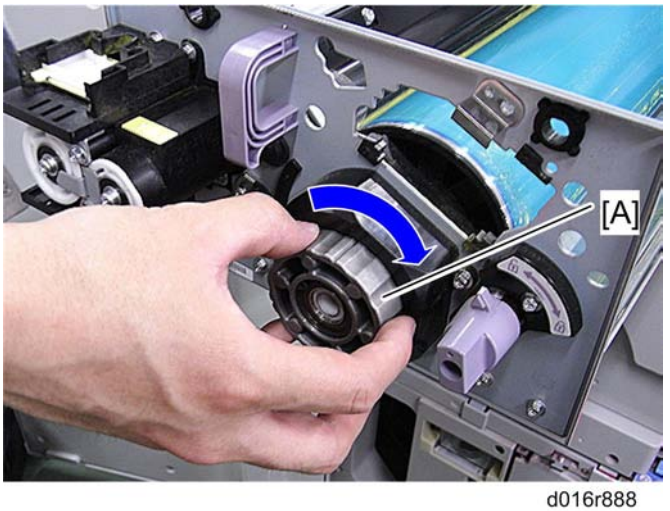

d016r888

- Rotate the drum lock nut [A] clockwise until the drum lock nut [A] stops and does not rotate any more when installing or replacing the drum unit.

Cleaning Requirement at PM Replacement

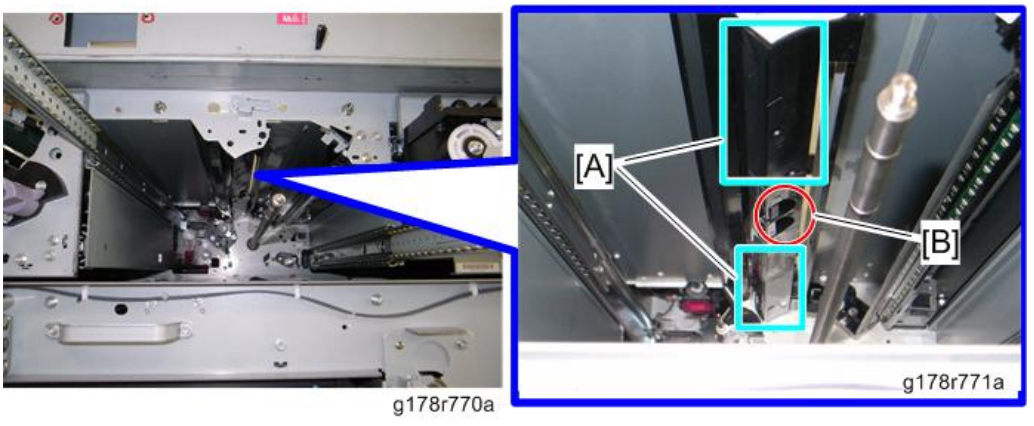

- Clean the cover [A] of the drum potential sensor for each color with a dry cloth at every drum unit replacement. However, **never touch** the drum potential sensor probe [B] **with a dry cloth**. If you do so, static electricity may occur and cause a malfunction of the drum potential sensor. Use a blower brush when cleaning the drum potential sensor probe.

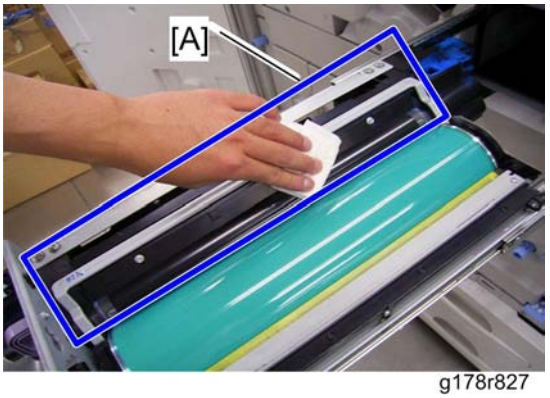

g178r827

- Clean the top of the development unit with a dry cloth at every drum unit replacement.

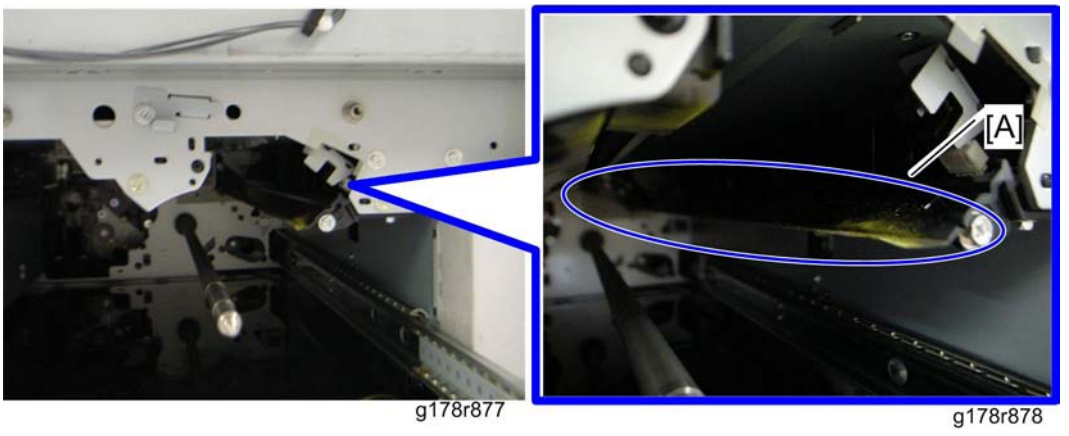

- Clean the mylar [A] at the quenching lamp cover with a dry cloth at every drum unit replacement.

After installing a new drum unit

1. After you replace the drum, always coat the drum with Lubricant Powder B1329700. For more, see "Lubricating the Drum". This must be done even if you put the old drum back in the machine, without installing a new one.
2. Clear the PM counter for the drum unit. See "PM Parts Screen Details" in the chapter "Preventive Maintenance".

Lubricating the Drum

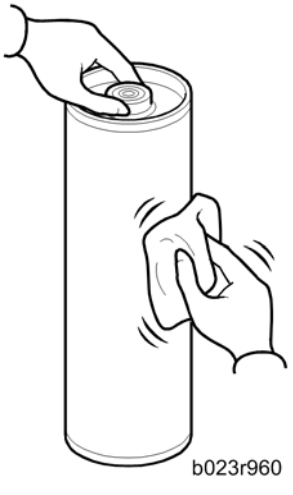

To prevent scouring a new drum when the machine is turned on, coat the new drum with Lubricant Powder (B1329700) before you install it.

Important

Important

- The Lubricant Powder (B1329700) (composed of Zinc Stearate) can be used for this machine (M077 or D095).
- Never use Setting Powder (54429101) for this machine, or you will damage the drum charge roller and cause problems with image quality.
- You must do PM counter clear or a fatal error will occur.

Reinstallation

- Never rotate the drum after reinstalling it.
- Always dust the drum before reinstallation after the drum unit has been removed to replace or service other parts in the PCDU.
- Hold both sides of the drum unit to carry it. The drum can fall if you just hold the handle of the drum unit.

Quenching Lamp

1. Drum unit (☛page 407)

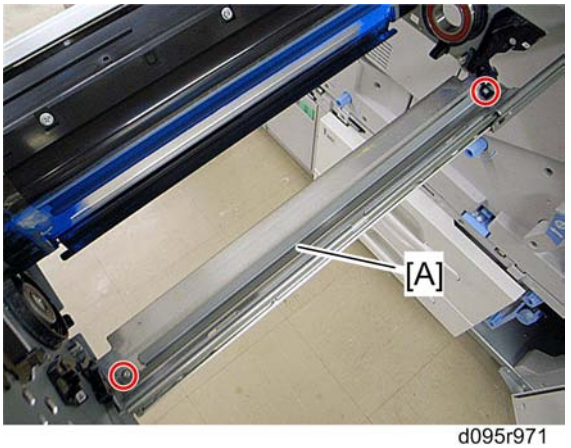

d095r971

2. Quenching lamp [A] (x 2, x 1)

Drum Motor

1. Open the controller rear box (☛page 354).

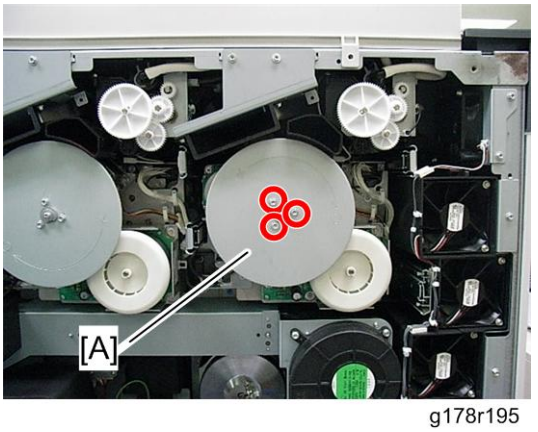

g178r195

2. Flywheel [A] (x 3)

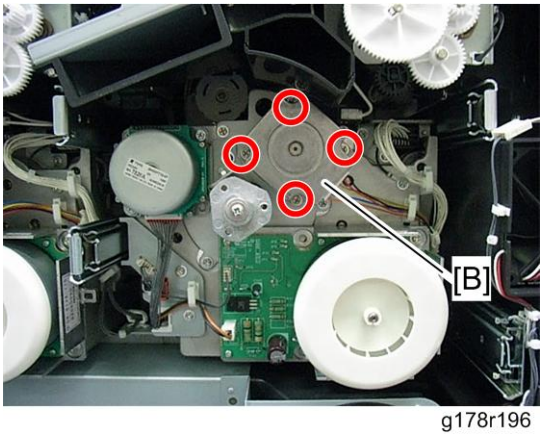

g178r196

3. Drum motor [B] (x 4, x 1, x 1)

Drum Cleaning Motor

1. Open the controller rear box (page 354).
2. Flywheel (page 411 "Drum Motor")

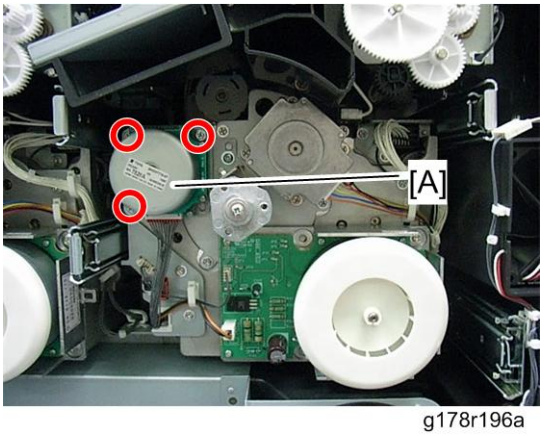

g178r196a

3. Drum cleaning motor [A] (x 3, x 1)

Drum Potential Sensor

Note

- The drum potential sensor is fragile and sensitive. Static electricity may damage this sensor. Discharge your static electricity before servicing.
- Do not clean the probe of the drum potential sensor with a dry cloth. Wiping with a dry cloth can cause static electricity on the probe of this sensor. This may make the probe much dirtier. Use a blower brush to clean this probe.
- Make sure that the power plug is disconnected.

1. Development unit (page 418)
2. Laser unit (page 363)
   - If you want to remove the potential sensor for K or C, remove the laser unit for CK (right one).
   - If you want to remove the potential sensor for M or Y, remove the laser unit for YM (left one).

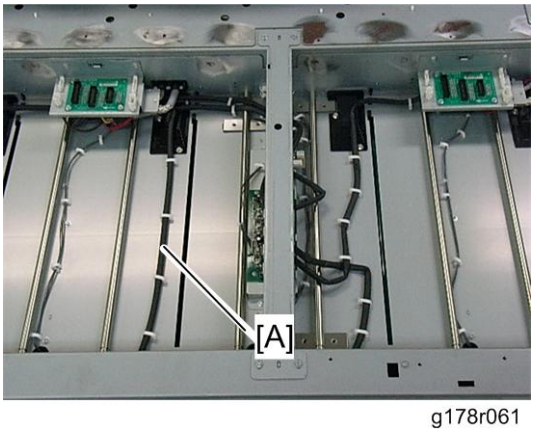

g178r061

3. Disconnect the harness [A] of the drum potential sensor.

Note

- Disconnect the harness which is for the potential sensor you want to remove. The picture above shows the harness for magenta.

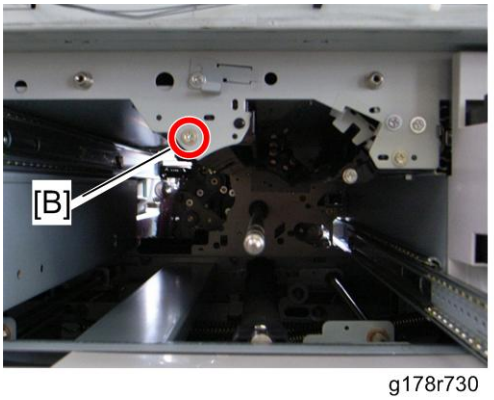

g178r730

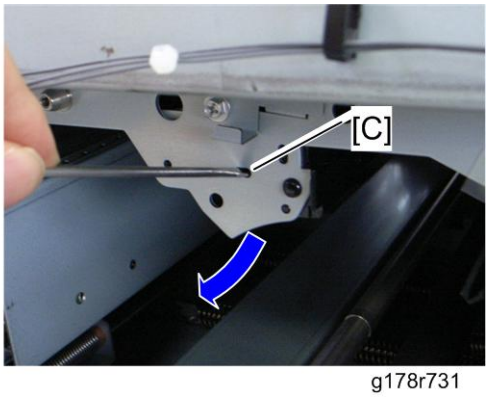

g178r731

4. Remove the screw [B], and then push the projection [C] on the sensor base to remove it.

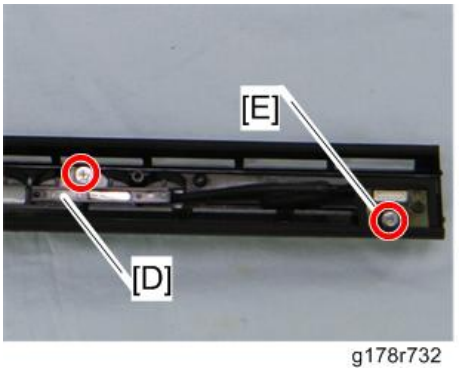

g178r732

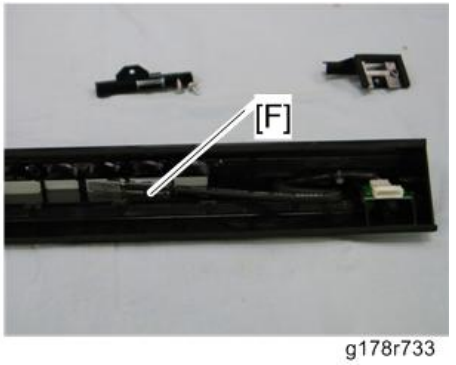

g178r733

5. Sensor holder [D] (x 1)
6. Connector cover [E] (x 1)
7. Drum potential sensor [F]

Cleaning Requirement

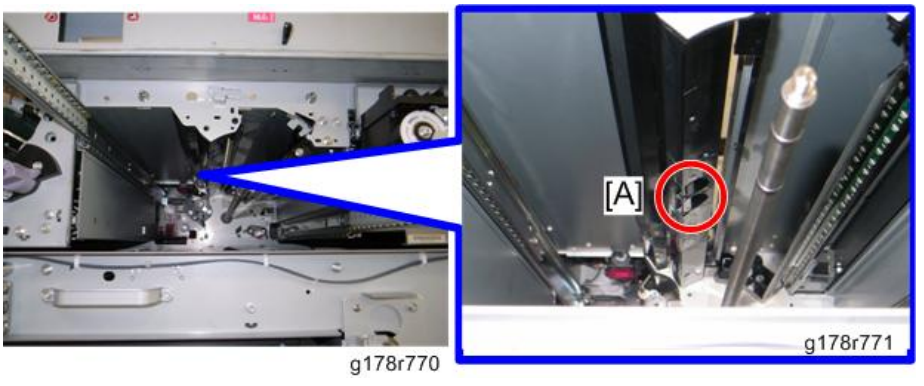

The drum potential sensor probe [A] for each color must be cleaned with a blower brush at every 400 K.

Note

- Do not clean the probe with a dry cloth.

Potential Sensor HVPS

1. Toner hopper cover (page 380)
2. Laser unit YM (page 363)

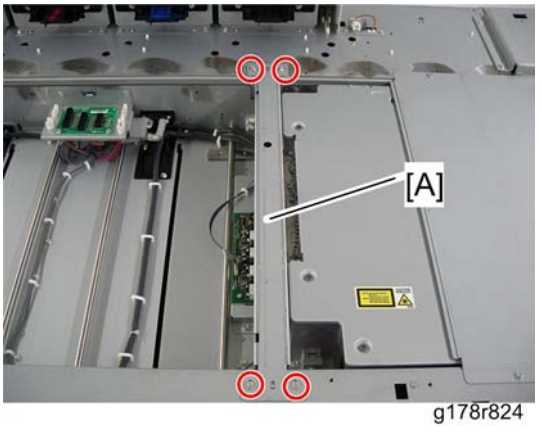

3. Laser unit base stay [A] (x 4)

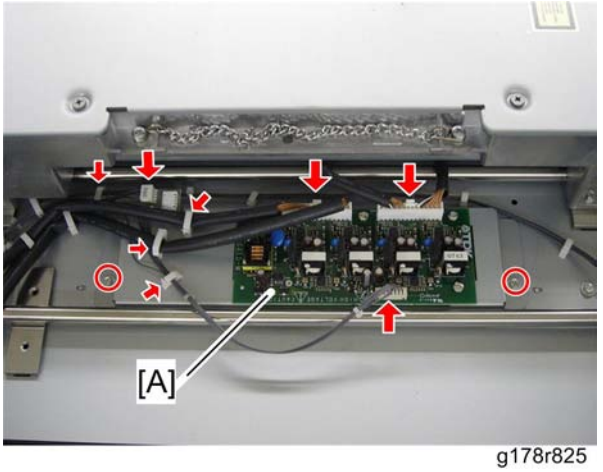

g178r825

4. Potential sensor HVPS bracket [A] (x 2, x 4, x 4)

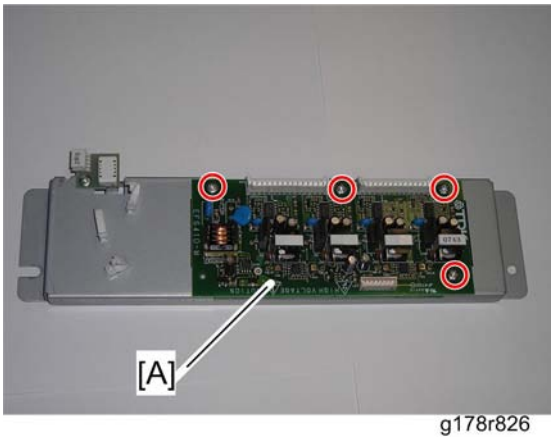

g178r826

5. Potential sensor HVPS [A] (x 4)

Dust Shield Glass

1. Drum unit (page 407)

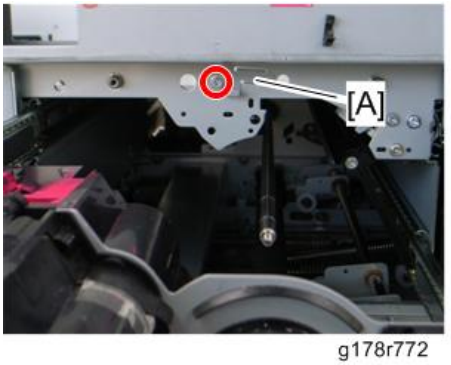

g178r772

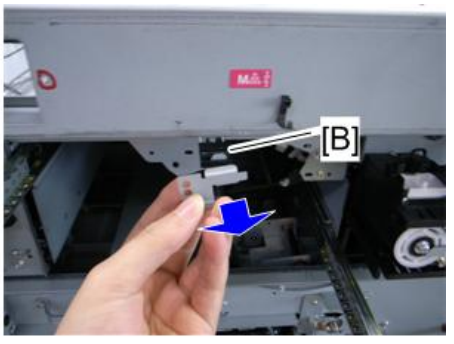

g178r773

2. Dust shield glass bracket [A] (x 1)
3. Dust shield glass [B]

When reinstalling the dust shield glass

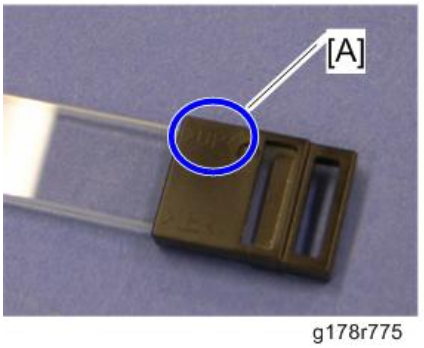

g178r775

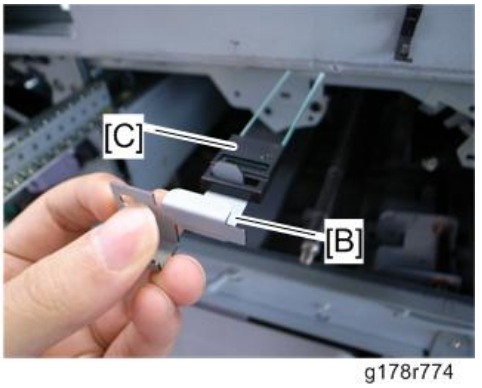

g178r774

- The dust shield glass must be installed the correct way around. The "UP" label [A] on the dust shield glass handle [C] should face upward when it is installed.
- Do not forget to insert the bracket [B] into the dust shield glass handle [C] when reinstalling the dust shield glass in the machine. If you insert the dust shield glass without this bracket, you cannot pull this glass out from this location. In that case, you have to remove the laser unit to remove this glass.

Erase Lamp Shield Glass

1. Drum unit (page 407)

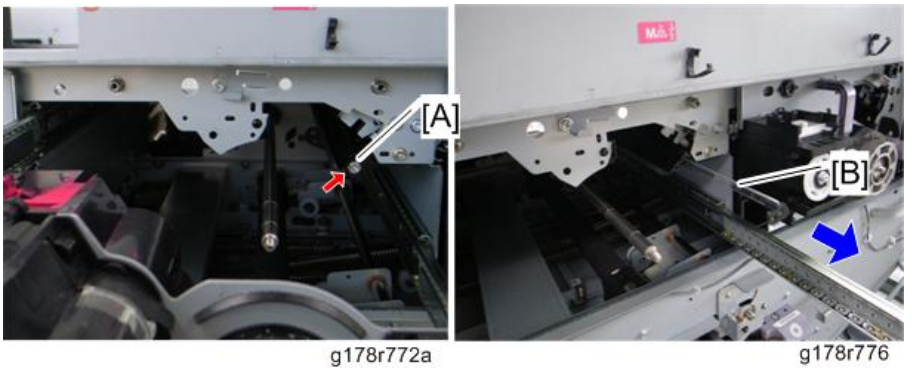

g178r772a g178r776

2. Remove screw [A] from the erase lamp shield glass (x 1).
3. Pull the handle to remove the erase lamp shield glass [B]

Cleaning Requirement

The erase lamp shield glass for each color must be cleaned with a blower brush every 400 K.

Development Unit

Note

- Place the development unit on a sheet of paper after its removal. Toner and developer may fall from the development unit.

Before removal

- If you will install a new development unit, do the developer removal first before removing the old development unit. (page 421 "Developer")

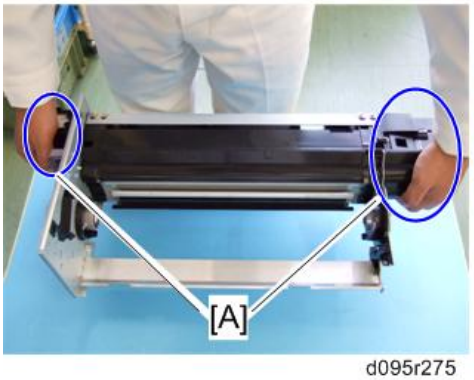

d095r275

- Be careful to handle the development unit after removing it from the slide rails. Hold the holding positions [A] for the development unit as shown above. Never hold positions other than holding positions [A]. Otherwise, the surface on the drum may be damaged or scratched.

Removal procedure

1. Pull out the development drawer unit (☛page 397 "Drum Cleaning Unit").
2. Drum cleaning unit (☛page 397)
3. Drum unit (☛page 407)

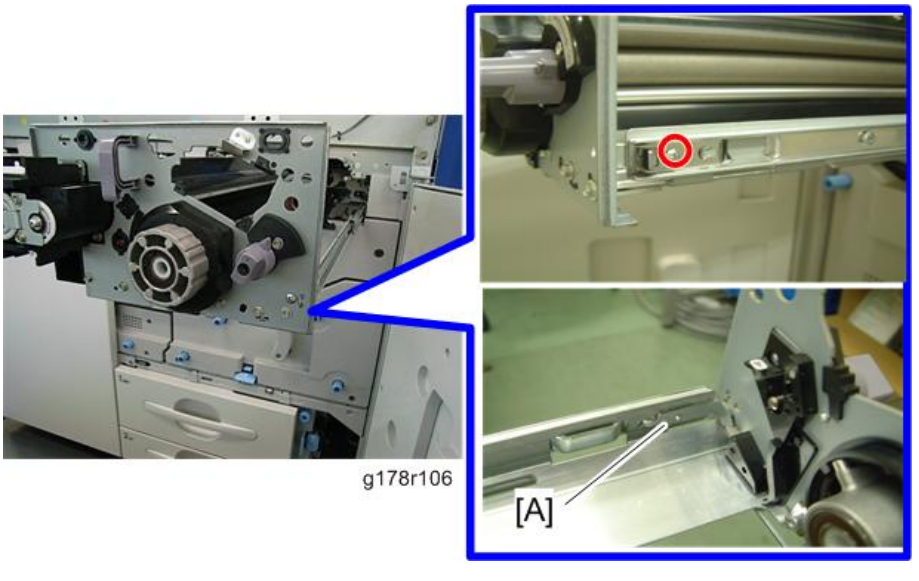

g178r106

4. Bracket [A] (x 1)

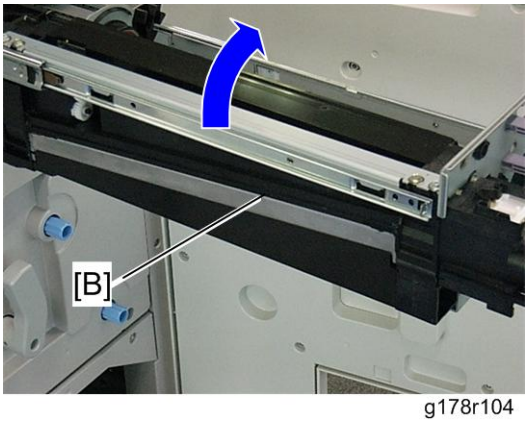

g178r104

5. Development unit [B]

Reassembling the Development Unit

If the development unit with developer is removed, and then reinstalled in the main machine, the developer in the development unit may be uneven. This may cause image problems. Follow the action for the development unit installation as described below after maintaining the development unit.

Required Action

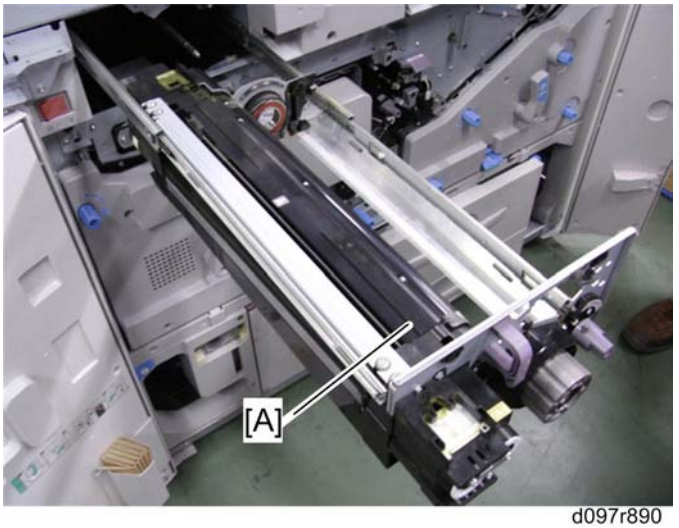

d097r890

1. Reinstall the development unit [A] in the PCDU drawer after maintaining the development unit.

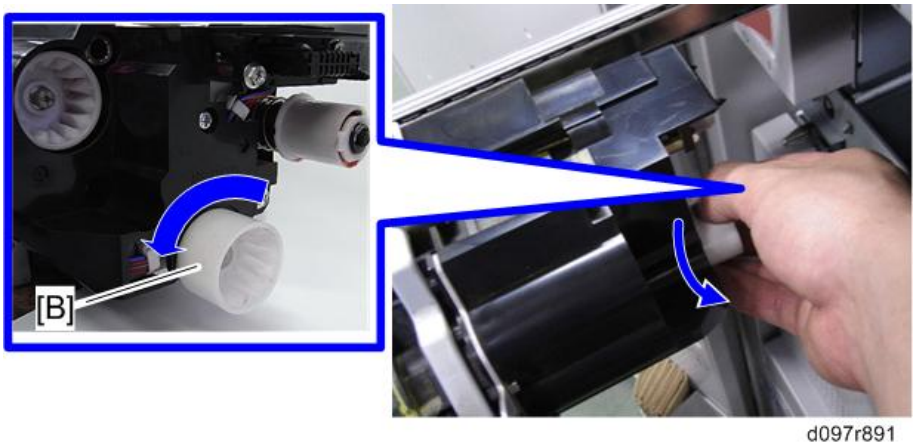

d097r891

2. Turn the coupling gear [B] on the rear side of the development unit counterclockwise **by ten rotations or more** as shown above. (This agitates the developer in the development unit, and then the developer becomes even.)

After installing the new development unit

1. Do the TD sensor initialization for the replaced development unit with SP3-801-xxx.
   - -001: All units (Bk, C, M, Y)
   - -002: Color units (C, M, Y)
   - -003: Bk, -004: C, -005: M, -006: Y
   - -008: Selected units (select the units with -007)

Developer

Important

- **Do not pull out the fusing unit drawer or registration unit drawer while replacing the developer. Otherwise, the developer replacement may fail.**

Removal

1. Front top cover (page 345)

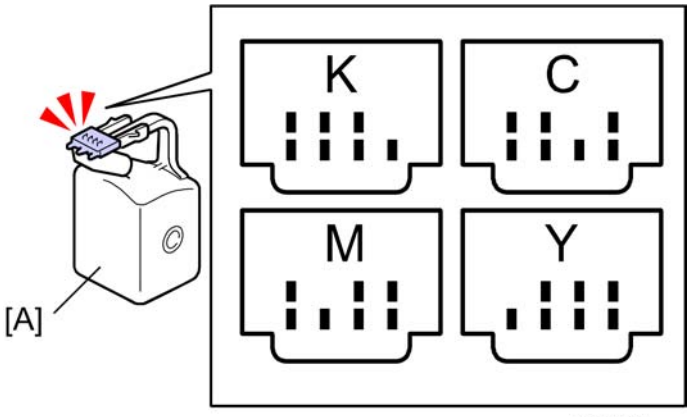

d095i050

2. Take the correct color of developer bottle [A].

Note

- The drawing shows how the projections correspond to the toner color.

3. Check that the developer bottle is empty.

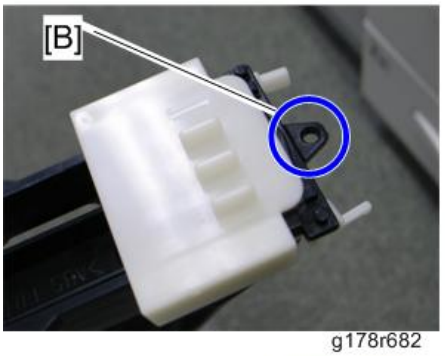

g178r682

g178r683

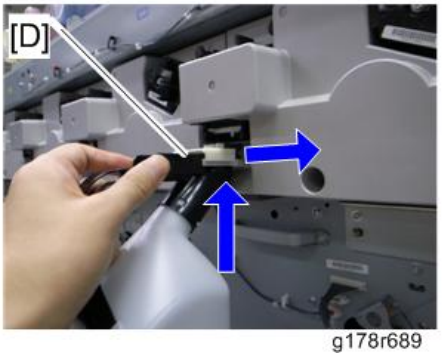

g178r689

4. Align the hole [B] of the bottle with the projection [C] under the developer outlet where developer will be emptied.
5. Push the developer bottle [D] to set it in position.

Note

- If you want to remove the developer from two development units or more, set empty bottles in those outlets.

6. Plug in and turn on the machine.
7. Enter the SP mode and then select SP2255-001.

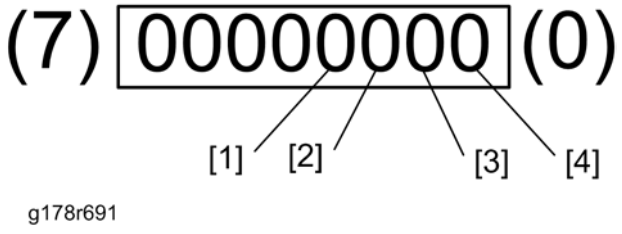

The color selection display appears on the LCD of the operation panel.

8. Select a color or colors for developer removal.

   "0": Not selected, "1": Selected

   - [1] shows the execution flag for the **"Black"** development unit. Press the "**3**" key on the operation panel if you want to select this color.
   - [2] shows the execution flag for the **"Cyan"** development unit. Press the "**2**" key on the operation panel if you want to select this color.
   - [3] shows the execution flag for the **"Magenta"** development unit. Press the "**1**" key on the operation panel if you want to select this color.
   - [4] shows the execution flag for the **"Yellow"** development unit. Press the "**0**" key on the operation panel if you want to select this color.

   Important

   - **Do not change the four digits at the left (from bit 7). This will cause the procedure to fail.**

9. Press # (Enter) after you selected all the colors that you need.
10. Execute the developer removal with SP2255-002.

    Note

    - It takes approximately 100 seconds to complete this removal.

11. After completing this removal, check the result for each development unit with SP2255-009 (black), -010 (cyan), -011 (magenta) or -012 (yellow).

    0: Failed, **1**: Completed

    Note

    - If "0" is displayed on the LCD, see "If the developer removal or installation fails" described below.

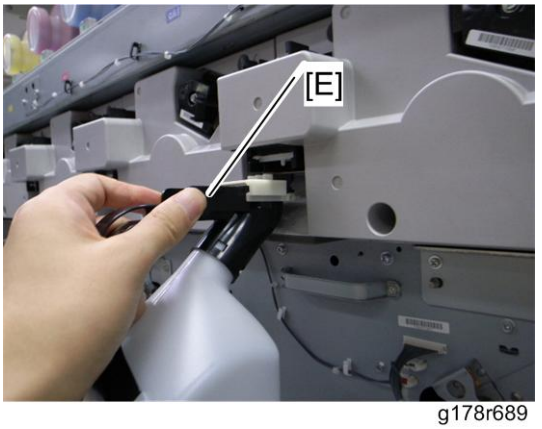

g178r689

12. Remove the developer bottle by pressing the both lock levers [E] on the developer bottle.

Note

- To avoid developer spillage while handling the developer bottle, always keep the developer bottle perfectly level.

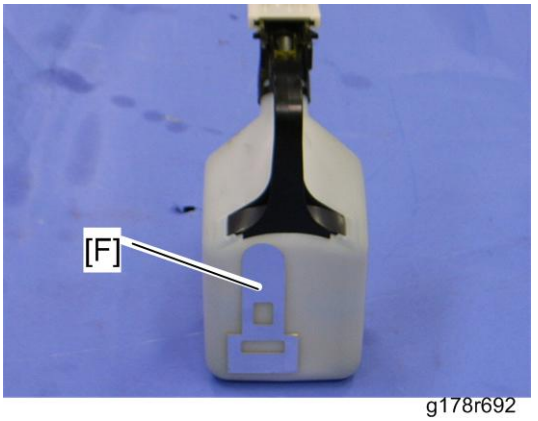

g178r692

13. Remove the seal [F] adhered to the developer bottle.

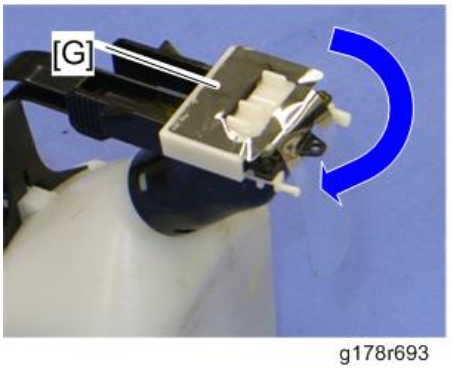

g178r693

g178r694

14. Attach it to the shutter [G] of the developer bottle as shown.

Installation

g178r869

A new developer bottle has a seal at the inlet. Do not remove this seal before attaching the developer bottle to the machine completely.

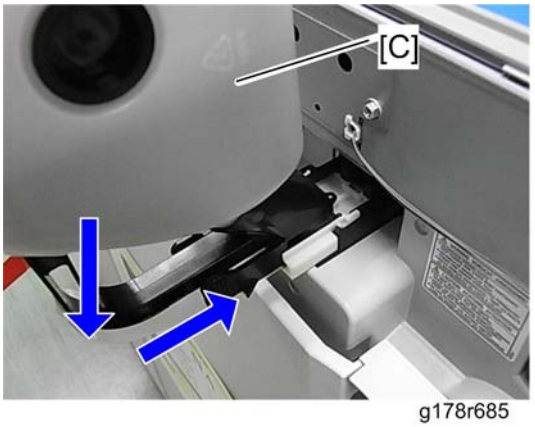

g178r685

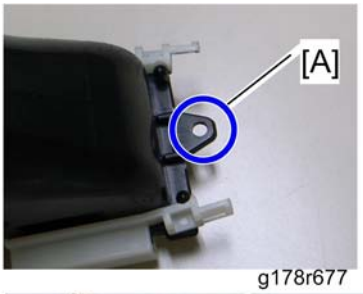

g178r677

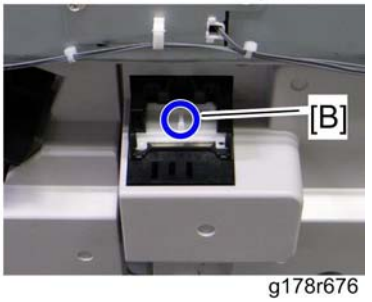

g178r676

1. Align the hole [A] of the bottle with the projection [B] on the developer inlet where developer will be installed.
2. Set and push the developer bottle [C].

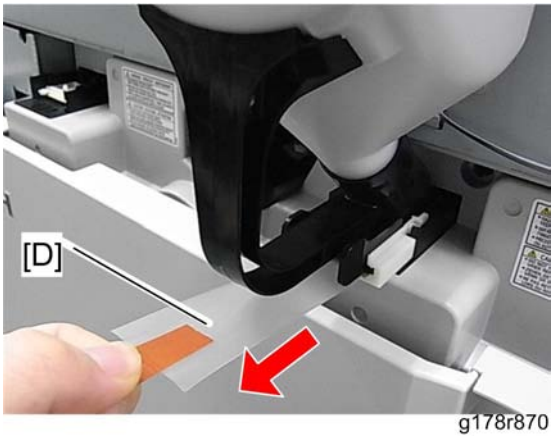

3. Pull out the seal [D] horizontally from the new developer bottle.
4. Enter the SP mode, and then select SP2256-001.

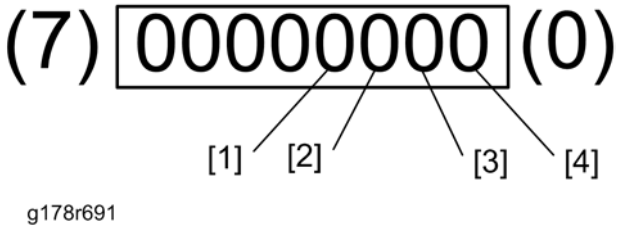

5. The color selection display appears on the LCD of the operation panel.
6. Select a color or colors for the developer installation. For details, refer to step 8 in the "Removal" procedure.

   "0": Not selected, "1": Selected

   - [1]: **Black:** use "**3**" to change the number between "0" and "1".
   - [2]: **Cyan:** use "**2**" to change the number between "0" and "1"
   - [3]: **Magenta:** use "**1**" to change the number between "0" and "1"
   - [4]: **Yellow:** use "**0**" to change the number between "0" and "1"

   Important

   - **Do not change the four digits at the left (from bit 7). This will cause the procedure to fail.**
7. Press # (Enter) after you selected all the colors that you need.
8. Execute the developer installation with SP2256-002.

   Note

   - It takes approximately 30 seconds to complete this installation.
9. After completing this installation, check the result for each development unit with SP2256-009 (black), -010 (cyan), -011 (magenta) or -012 (yellow).

0: Failed, 1: Completed

Note

- If "0" is displayed on the LCD, see "If the developer removal or installation fails" described below.

10. Remove the developer bottle.
11. Clear the PM counter for each developer. See "PM Counter Clear" in the chapter "Preventive Maintenance".
12. Close the left and right front door, and then the machine starts the "Initializing TD Sensor" automatically.
13. Check the result of "Initializing TD Sensor" with SP3-802-001.
    - 0: Failed, 1: Completed (bit 1: Black, bit 2: Cyan, bit 3: Magenta, bit 4: Yellow)

    Other codes

Code	Name/ Description/ Countermeasure
2	Execution interrupted
	• Unexpected program interruption • Door open during TD sensor initialization Retry SP3-801-xxx. [-001: all, -002: YMC, -003: K, -004: C, -005: M, -006: Y, -007: Color selection, -008: Execution for selected color TD sensors (-007)]
4	Default (No execution)
5	Not executed
	• No TD sensor initialization after installing new developer. Retry SP3-801-xxx.
9	Vtcnt Error
	• Vtref adjustment error (out of target range: SP3-001-007) 1. Retry SP3-801-xxx. 2. Refer to the countermeasures in the SC table for each SC code.

Important

- **Do not execute TD sensor initialization again after completing TD sensor initialization. If so, the image density may become too dark or light.**

14. Reassemble the machine.

If the developer removal or installation fails

If "0 (Failed)" is displayed in the result confirmation screen (SP2255 or SP2256), do the following procedures.

Removal Failure
1. Check if the developer bottle is correctly set and that the seal is removed, and set it again. 2. Execute the developer removal again with SP2255-002.
Installation Failure
• Installation movement stops just after the machine has started the developer installation. In this case, the machine prevents the developer from becoming overloaded in the development unit due to insufficient developer removal. 1. Execute the developer removal again. 2. Execute the developer installation after the developer removal is completed. • The developer installation fails or developer still remains in the developer bottle even though the machine has executed the developer installation. 1. Execute the developer installation again. 2. Clear the PM counter for each developer with SP7622-001 to -004.

TD Sensor

Note

- Place the development unit on a sheet of paper after its removal. Toner and developer may fall from the development unit.

1. Development unit (☛page 418)

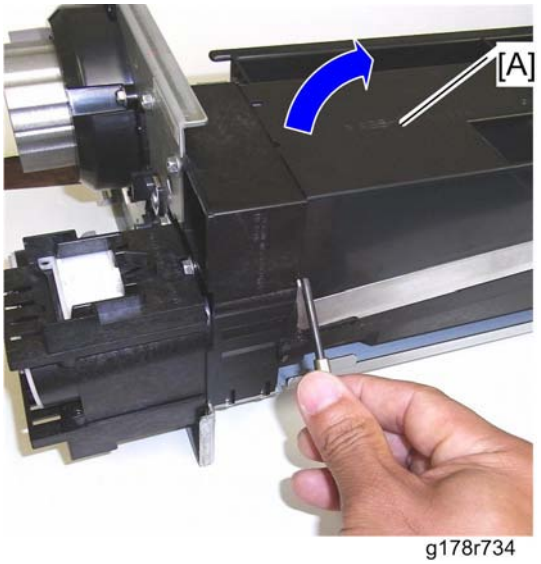

g178r734

2. Turn the development unit upside down and place it on the paper.
3. Remove the bottom cover [A] (hook).

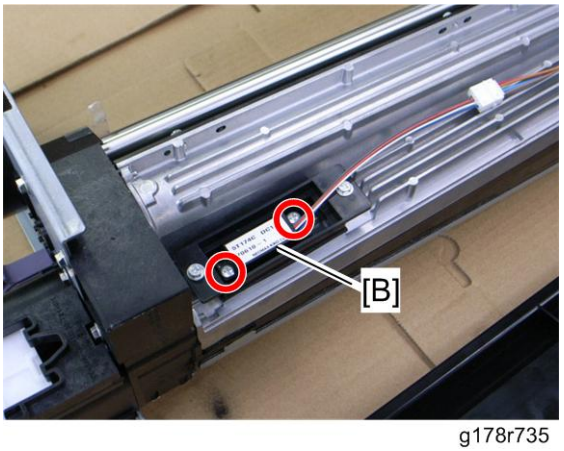

g178r735

4. TD sensor [B] (x 2, x 1)
5. Install new developer.

After installing a new TD sensor

Execute SP3801 to initialize the TD sensor settings.

- -001: All color
- -002: Color (YMC)
- -003: (K), -004: (C), -005: (M), -006: (Y)
- -007: Multiple colors selection

- -008: Multiple colors execution

Development Motor

1. Open the controller rear box (☛page 354)
2. Flywheel (☛page 411 "Drum Motor")

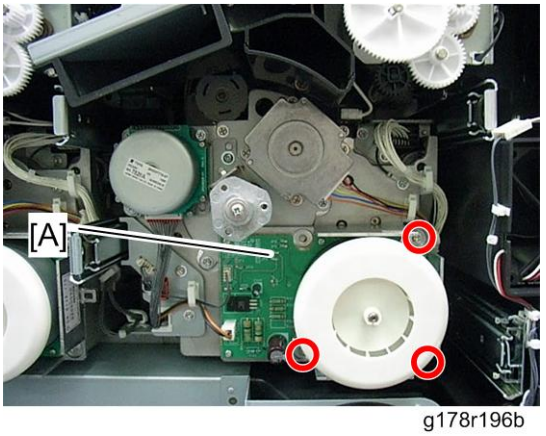

g178r196b

3. Development motor [A] (x 3, x 2)

Development Fan

1. Open the controller rear box (☛page 354).

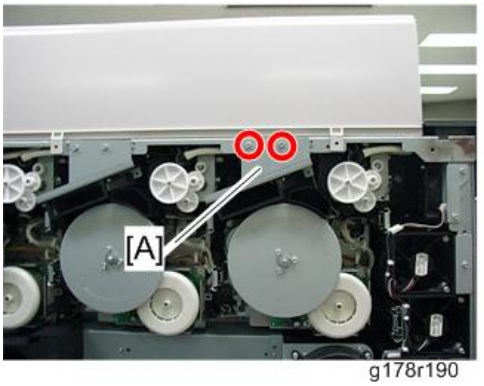

g178r190

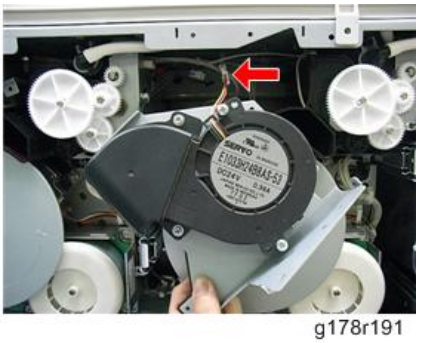

g178r191

2. Development fan bracket [A] (x 2, x 1)

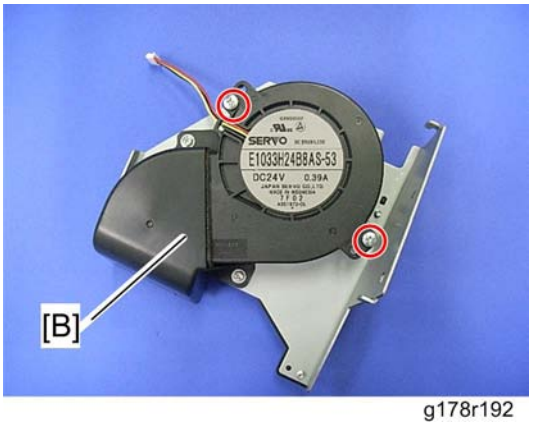

g178r192

3. Development fan [B] (x 2)

Charge Cleaning Motor

1. Open the controller rear box (page 354).
2. Flywheel (page 411 "Drum Motor")
3. Development fan bracket (page 430 "Development Fan")

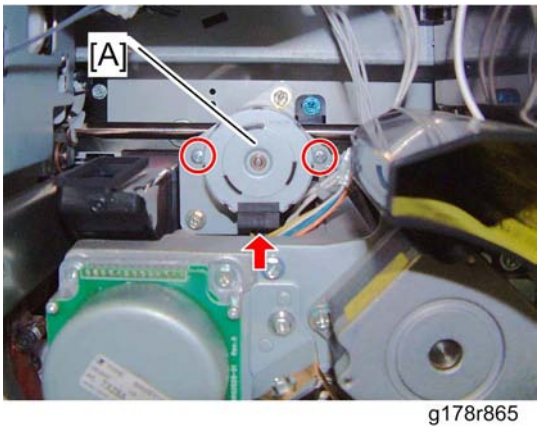

g178r865

4. Charge cleaning motor [A] (x 2, x 1)

Image Transfer

Important

- For some PM parts, automatic adjustment will be executed after clearing the PM counter (☛ page 321 "PM Parts Screen Details").Open one of the front doors, and then close it after clearing the PM counter. The door open/close will execute the automatic adjustment for the replaced PM parts.

ITB (Image Transfer Belt) Unit Drawer

Normal Slide-out Position

1. Open the left and right front door.

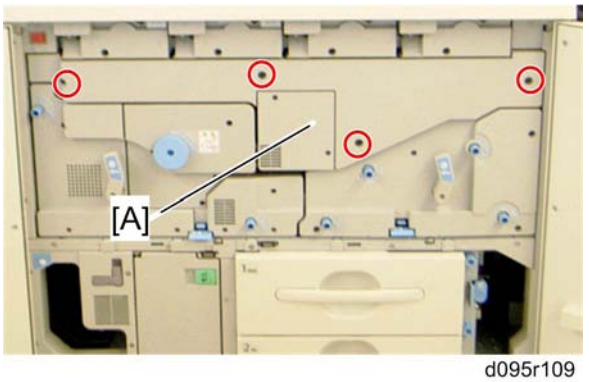

d095r109

2. Inner cover [A] for the ITB unit drawer (x 4)

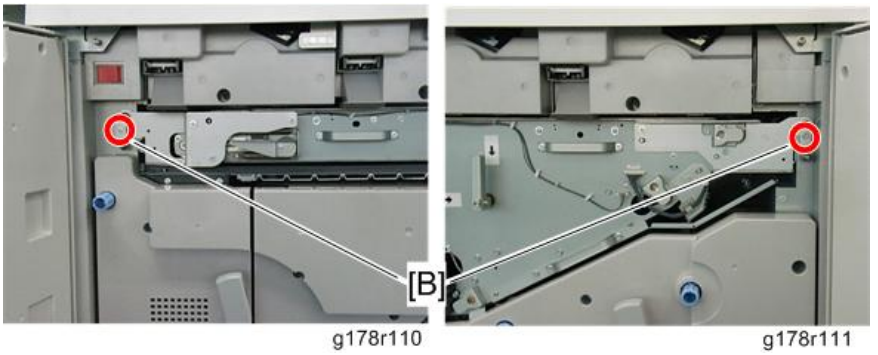

g178r110 g178r111

3. Remove the two screws [B] at both sides of the ITB unit drawer.

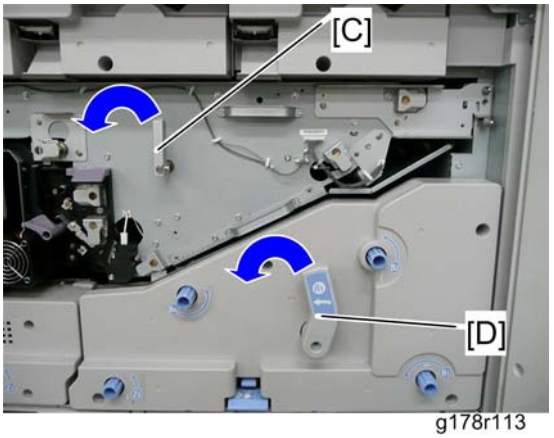

g178r113

4. Turn the ITB unit drawer lock lever [C] and registration unit drawer lock lever [D] counterclockwise.

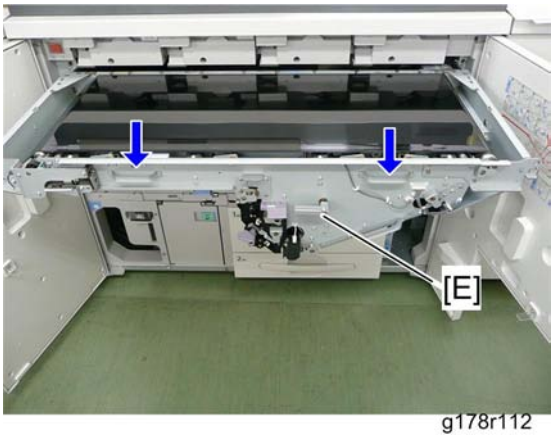

g178r112

5. Pull out the ITB unit drawer [E] while holding the grips on the ITB unit drawer.

Full Slide-out Position

1. Pull out the ITB unit drawer to the normal slide-out position (see above).
2. ITB cleaning unit (☛page 434)

g178r373 g178r371 g178r372

3. Release the hooks [A] [B] at the left and right rails of the ITB unit drawer, and then pull the ITB unit drawer out a little bit.

g178r374

4. The picture above shows that the ITB unit drawer is at the full slide-out position.

ITB Cleaning Unit

1. Open the left and right front doors.

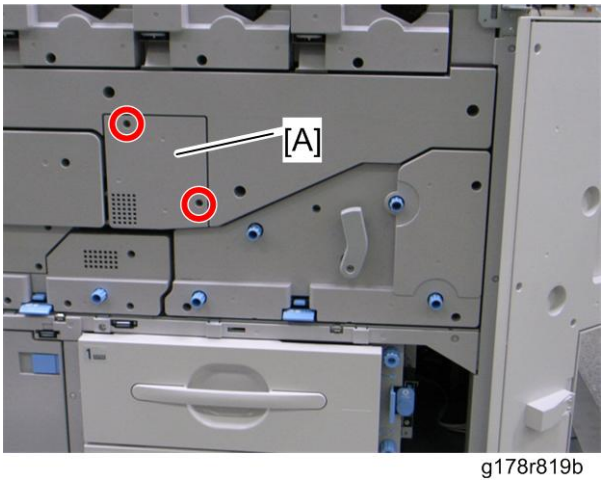

g178r819b

2. Inner cover [A] for the ITB cleaning unit (x 2)

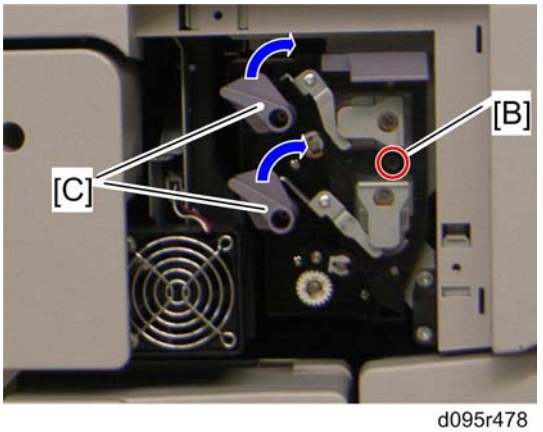

d095r478

3. Remove the black screw [B].
4. Turn the cleaning blade contact lever and lubricant blade lever [C] clockwise.

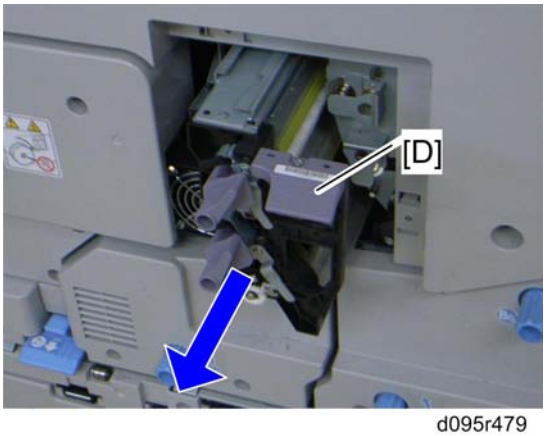

d095r479

5. Pull the ITB cleaning unit [D] part of the way out of the machine.

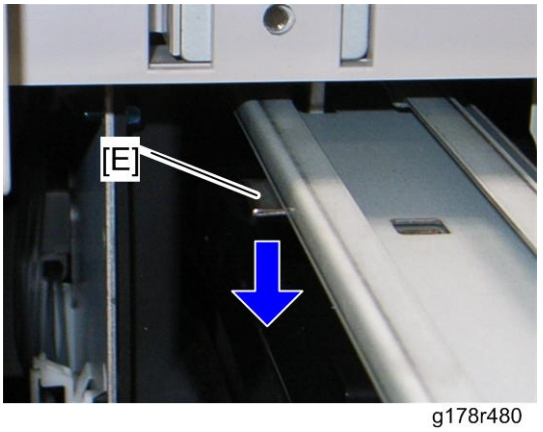

g178r480

6. Pull out the ITB cleaning unit while pressing down the lock tab [E].

Note

- To avoid toner spillage while handling the image transfer belt cleaning unit, always keep the ITB cleaning unit level.

ITB Lubrication

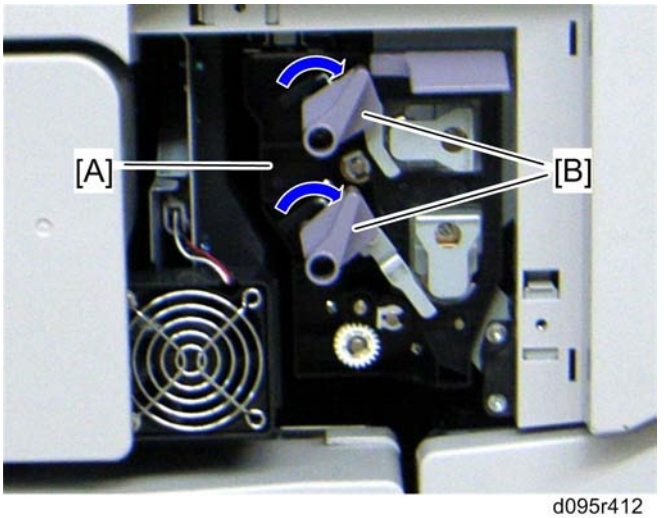

d095r412

1. Install the new ITB cleaning unit [A] (black screw x 1).
2. Make sure that both cleaning blade and lubricant blade are away from the image transfer belt.

   Important

   - **Turn the levers [B] clockwise so that the levers [B] are to the right of the set position.**
3. Turn on the machine with the right front door open.

   Important

   - **Do not close the right front door at this time.**

1. Enter the SP mode, and then select SP2311-001.
2. Press "Execute" button on the LCD to lubricate the image transfer belt.
3. Close the right front door.
4. The lubricating mode starts after the right front door has been closed.

   Important

   - **Do not open any doors during lubricating mode. The lubricating mode takes about 5 minutes.**
5. Open the right front door after the lubricating mode has completed.

6. Turn the levers [C] counterclockwise so that the levers [C] are at the left position.
7. Attach the inner cover [D] for the ITB cleaning unit (black screw x 2).
8. Close the right front door.

The machine starts to warm-up after closing the right front door.

After installing a new ITB cleaning unit

1. Lubricate the image transfer belt (☛page 436 "ITB Lubrication").
2. Clear the PM counter for the ITB cleaning unit. See "PM Parts Screen Details" in the chapter "Preventive Maintenance".

ITB Fan Cleaning Procedure

1. Pull out the fusing unit drawer (☛page 523).

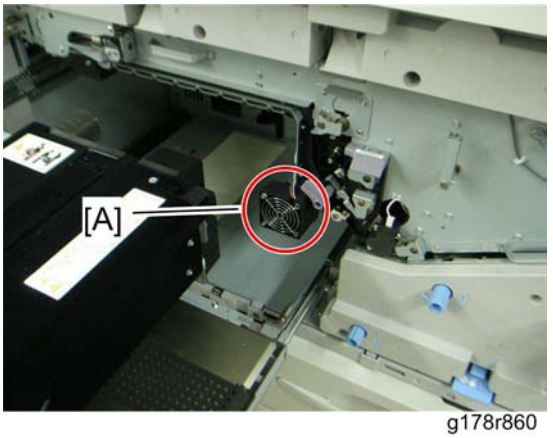

g178r860

2. Clean the ITB fan [A] with a dry cloth and/ or blower brush at 400 K intervals.

ITB Cleaning and ITB Lubricant Blades

1. ITB cleaning unit (☛page 434)

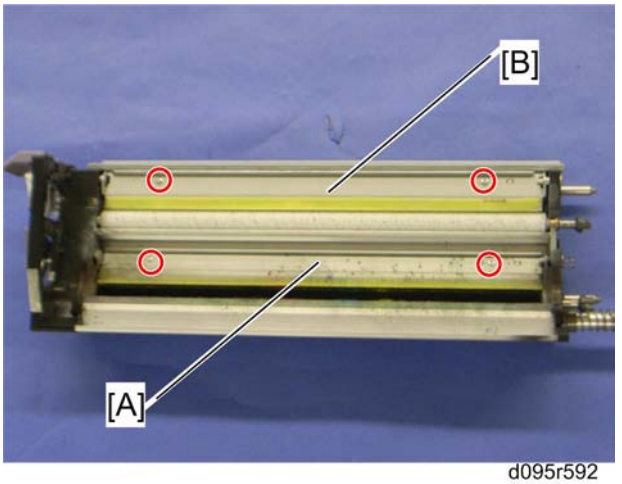

d095r592

2. ITB cleaning blade [A] (x 2)
3. ITB lubricant blade [B] (x 2)

After installing a new ITB cleaning blade

1. Lubricate the image transfer belt (page 436 "ITB Lubrication").
2. Clear the PM counter for the ITB cleaning blade. See "PM Parts Screen Details" in the chapter "Preventive Maintenance".

ITB Lubricant Brush Roller and Lubricant Bar

1. ITB cleaning unit (page 434)
2. ITB lubricant blade (page 437)

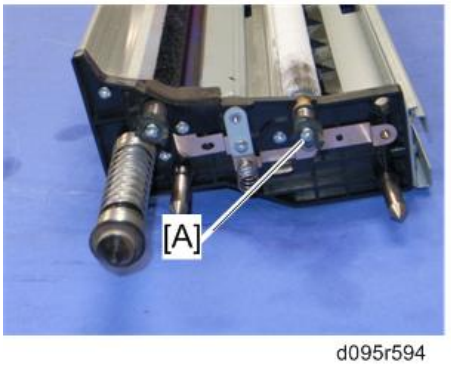

d095r594

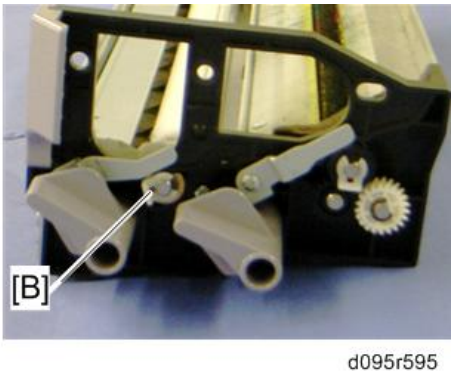

d095r595

3. Rear gear [A] (x 1)
4. Front bushing [B] (x 1)

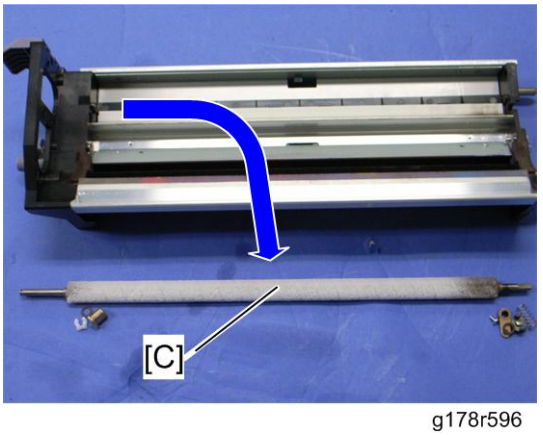

g178r596

5. ITB lubricant brush roller [C]

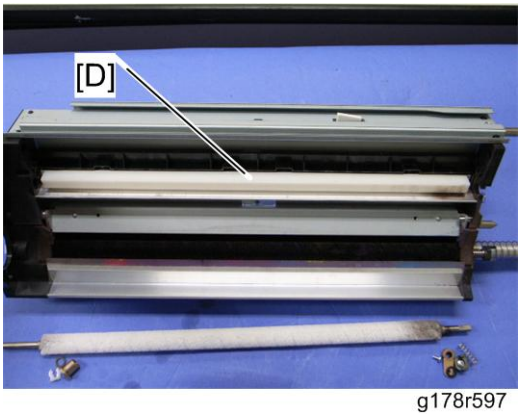

g178r597

6. ITB lubricant bar [D]

After installing a new ITB lubricant brush roller or ITB lubricant bar

Clear the PM counter for the ITB lubricant brush roller or ITB lubricant bar. See "PM Parts Screen Details" in the chapter "Preventive Maintenance".

ITB Cleaning Brush Roller

1. ITB cleaning unit (☛page 434)
2. ITB cleaning blade (☛page 437)

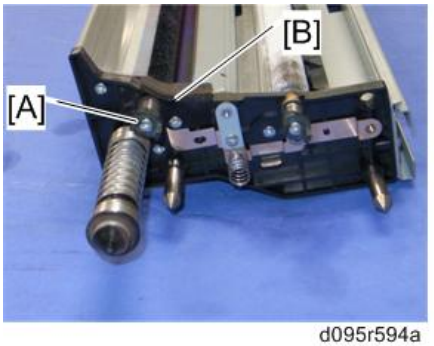

d095r594a

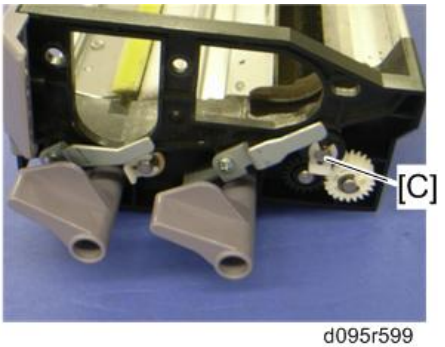

d095r599

3. Rear gear [A] (x 1, washer x 1, spring x 1)
4. Roller stopper [B] (x 2)
5. Front gear [C] (x 1)

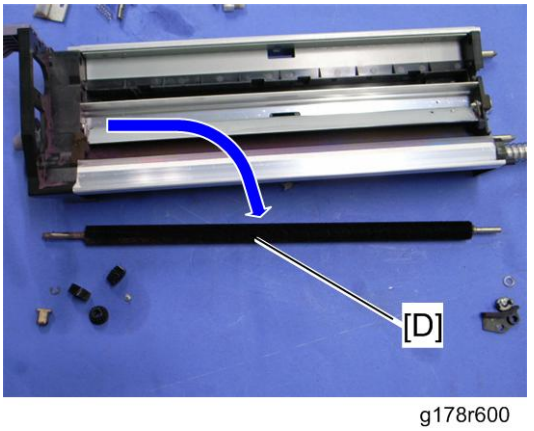

g178r600

6. ITB cleaning brush roller [D] (bushing x 1)

After installing a new ITB cleaning brush roller

Clear the PM counter for the ITB cleaning brush roller. See "PM Parts Screen Details" in the chapter "Preventive Maintenance".

Image Transfer Belt

Note

- When servicing the ITB belt cleaning unit, make sure the “Seal: Belt Cleaning: Entrance: Side” is NOT lapping over the ”Entrance Seal: Belt Cleaning”.

1. ITB cleaning unit (page 434)
2. Pull out the ITB unit drawer (page 432)

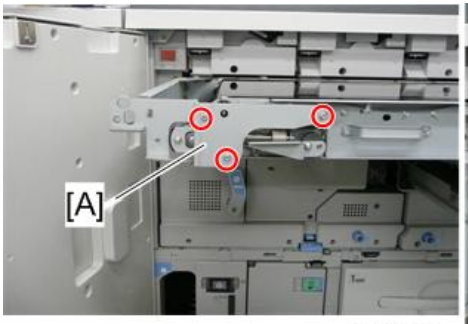

g178r832

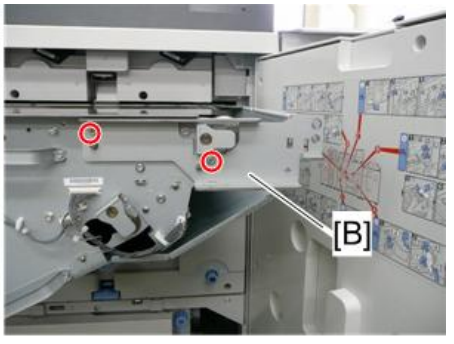

g178r833

3. Drawer left bracket [A] (x 3)
4. Drawer right bracket [B] (x 2)

Note

- When reinstalling the drawer left and right brackets, reinstall the drawer **right** bracket **first**, and then reinstall the drawer left bracket. This makes the reinstallation of the drawer left and right brackets easier.

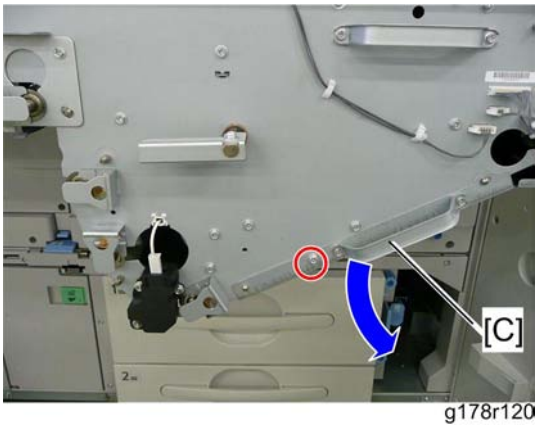

g178r120

5. Open the ITB lower door [C] (x 1).

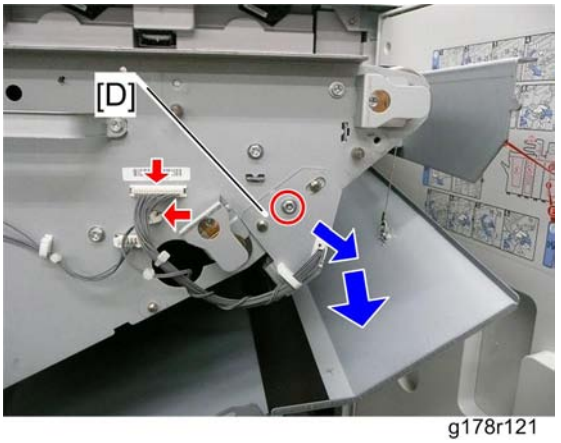

g178r121

6. Sensor unit bracket [D] (x 1, x 2)

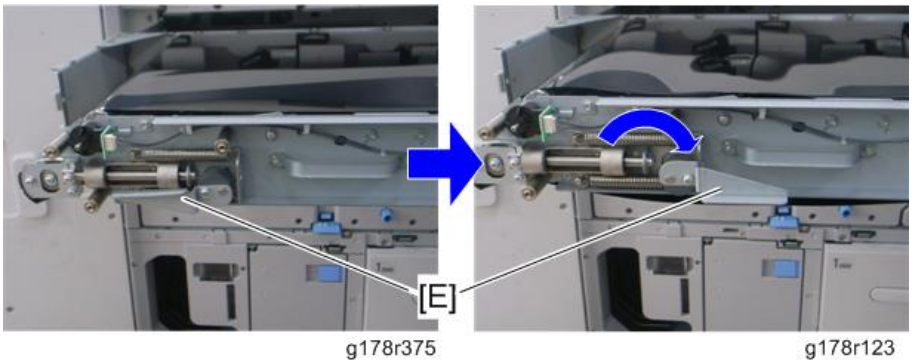

g178r375 g178r123

7. Turn the belt tension lever [E] clockwise.

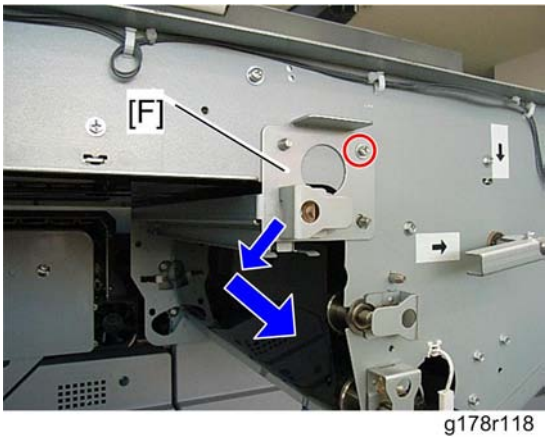

g178r118

8. Belt tension roller unit [F] (x 1)

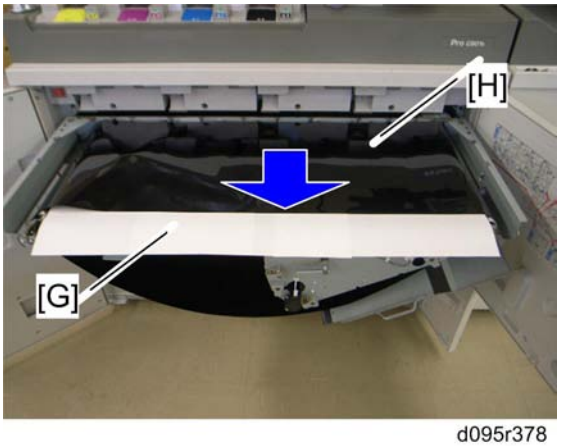

d095r378

9. Insert sheets of paper [G] between the Image transfer belt and ITB unit drawer.
    - The sheets of paper prevent the image transfer belt from being damaged and make the removal of the image transfer belt easier.
10. Image transfer belt [H]

When installing a new image transfer belt

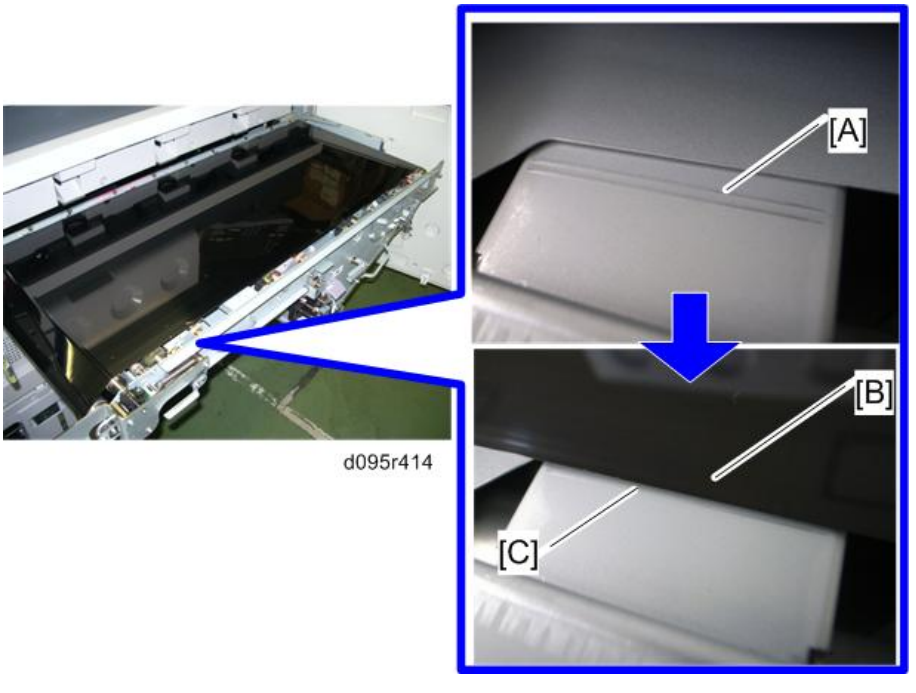

d095r414

There are two parallel reference lines [A] on the frame of the image transfer unit drawer. When installing a new image transfer belt, install the new ITB in the image transfer unit drawer so that the front edge [B] of the ITB aligns between two lines [C].

After installing a new image transfer belt

1. Lubricate the image transfer belt (☛page 436 "ITB Lubrication").
2. Clear the PM counter for the image transfer belt. See "PM Counter Clear" in the chapter "Preventive Maintenance".
3. Do the ITB Condition Check. (☛ Troubleshooting – Operation Problems -page 754 "ITB Condition Check ").

ID/MUSIC Sensors

1. Sensor unit bracket (☛page 440 "Image Transfer Belt")

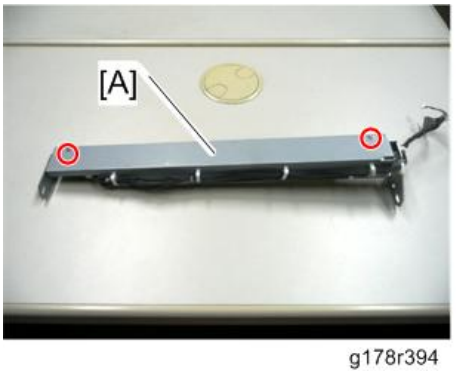

g178r394

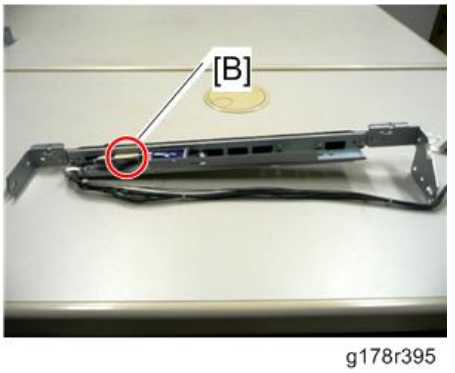

g178r395

2. Sensor bracket [A] (x 2)
3. Disconnect the connector [B].

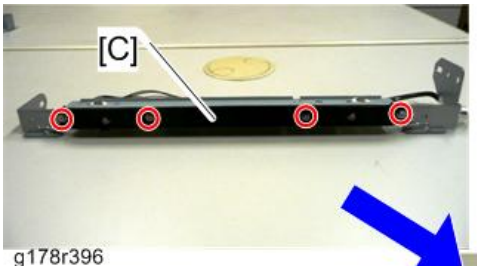

g178r396

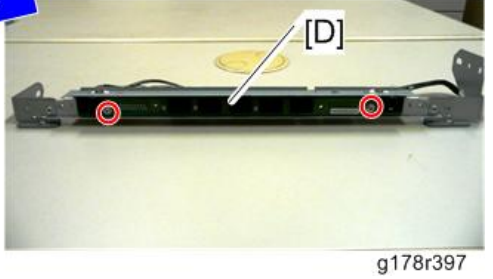

g178r397

4. Sensor cover [C] (x 4)
5. ID/MUSIC sensors [D] (x 2)

After installing new ID/MUSIC sensors

Do the following adjustment after installing new ID/MUSIC sensors.

1. Plug in the power cord and turn on the main power switch of the machine.
2. Enter the SP mode.

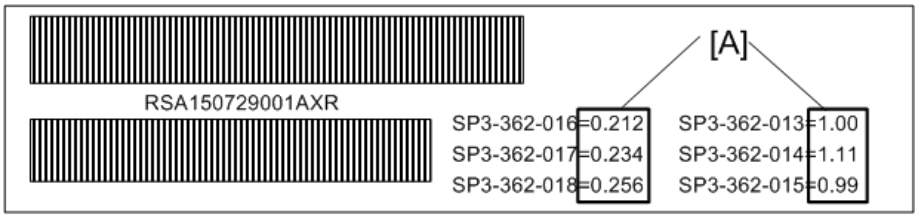

b230r502

3. Input all correction coefficients [A] for the ID/MUSIC sensors with the SP modes, referring to the barcode sheet provided with the new ID/MUSIC sensors.

Note

- For example, input "1.00" with SP3-362-013.

4. Execute "Process Control" with SP3-820-001 after inputting the adjustment values.

ITB Drive Motor

1. ITB cleaning unit (page 434)
2. Pull out the ITB unit drawer to the full slide-out position (page 433).

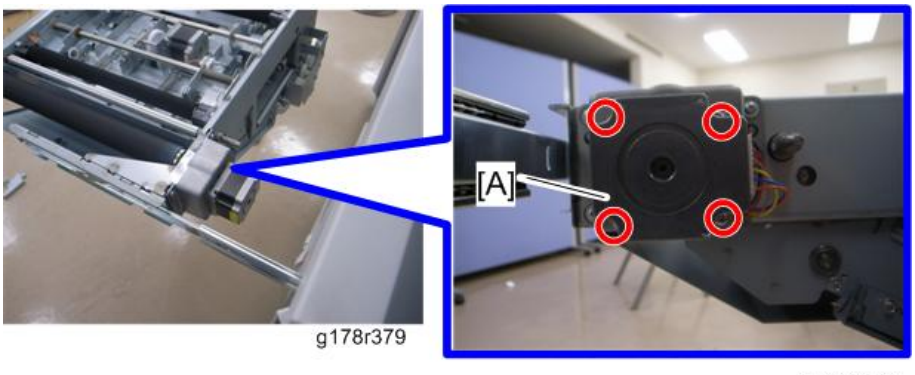

g178r379

g178r380

3. ITB drive motor [A] (x 4, x 1)

ITB Motor Rotation Sensors

1. ITB cleaning unit (page 434)

2. Pull out the ITB unit drawer to the full slide-out position (☛page 433).

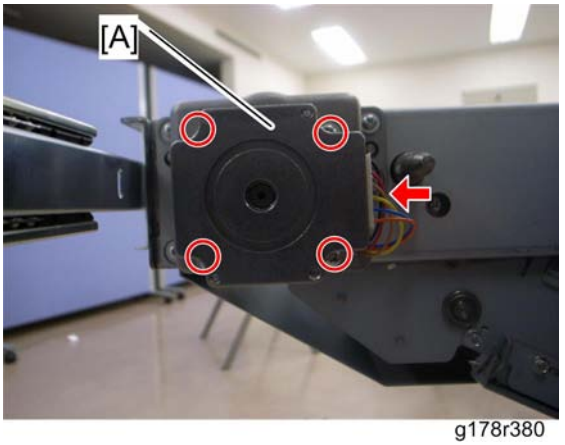

g178r380

3. ITB drive motor [A] (x 4, x 1)

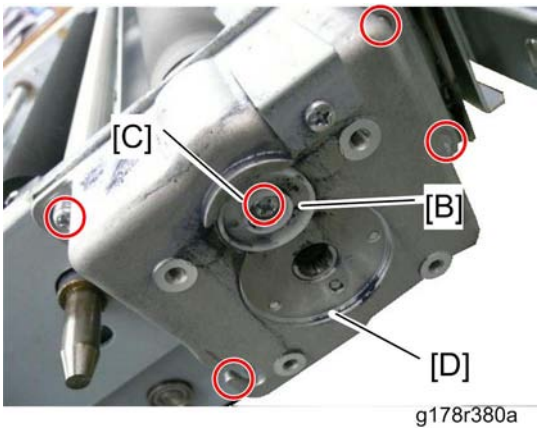

g178r380a

4. ITB roller bushing [B]
5. Remove the screw [C].
6. ITB sensor cover [D] (x 4)

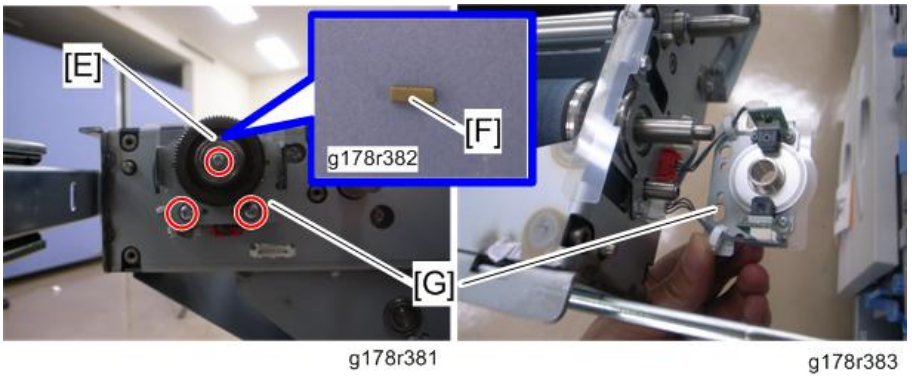

g178r382

g178r381

g178r383

7. Gear [E] (x 1, bearing x 1, small bar [F]x 1)

Note

- The small bar [F] is extremely small. Do not lose this bar.

8. Sensor bracket [G] (x 1, x 2)

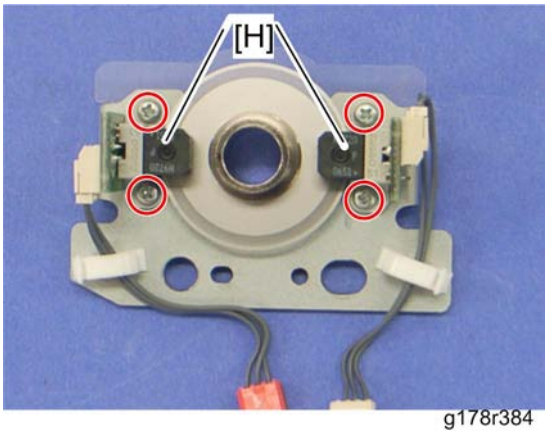

g178r384

9. ITB motor rotation sensors [H] (x 2, x 1, x 1 each)

Reinstalling the ITB motor rotation sensors

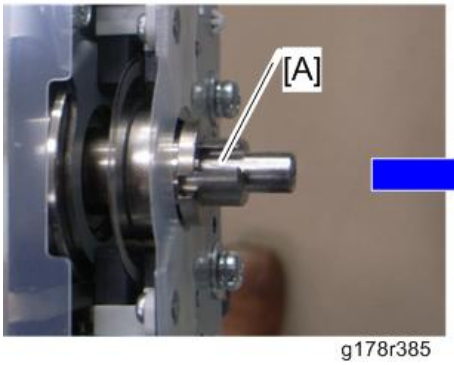

g178r385

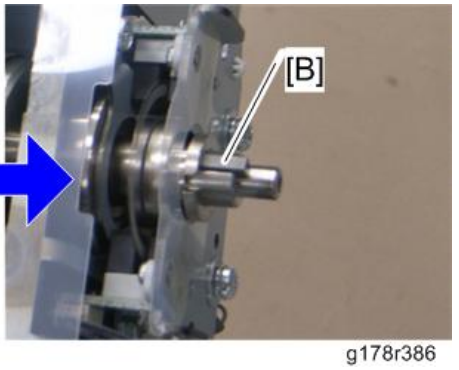

g178r386

Before reinstalling the sensor bracket, make sure that the small bar [B] is set in the groove [A] at the rear edge of the ITB drive roller as shown.

Belt Speed Sensor

1. Image transfer belt (page 440)

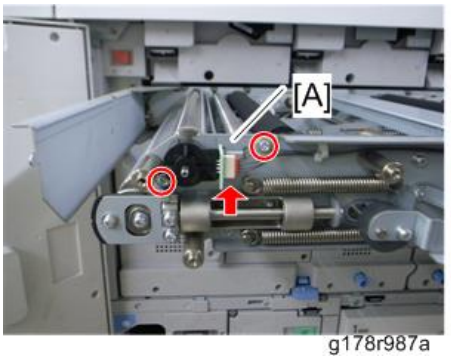

g178r987a

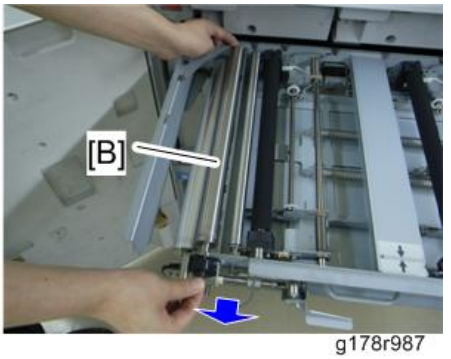

g178r987

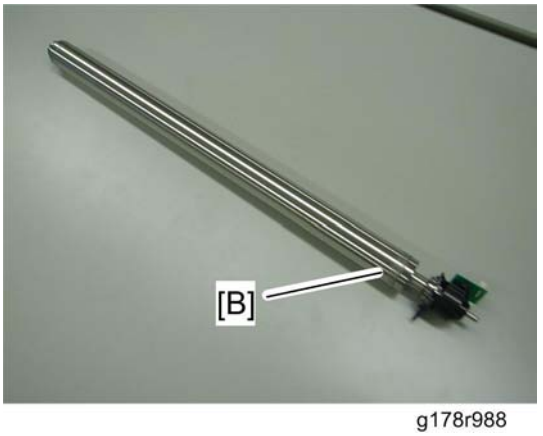

g178r988

2. Sensor holder bracket [A] (x 1)
3. Encoder roller [B] with the encoder unit (x 1, x 1)
   - The belt speed sensor is located in the encoder unit (black case). However, the encoder unit (belt speed sensor) cannot be detached from the encoder roller (these are precisely adjusted). When replacing the encoder unit (belt speed sensor), replace the encoder roller with the encoder unit.

When reinstalling the encoder roller with the encoder unit

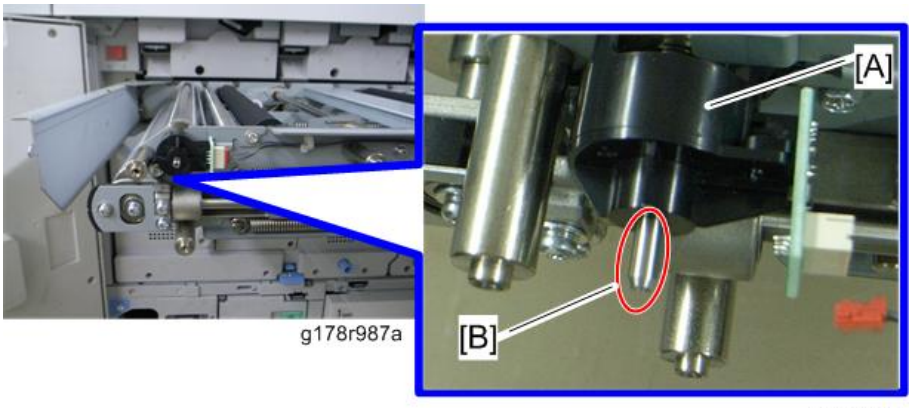

g178r881

1. Do not hold the encoder unit (black case) [A] when reinstalling the encoder roller with the encoder unit. Hold the shaft [B] of the encoder roller.

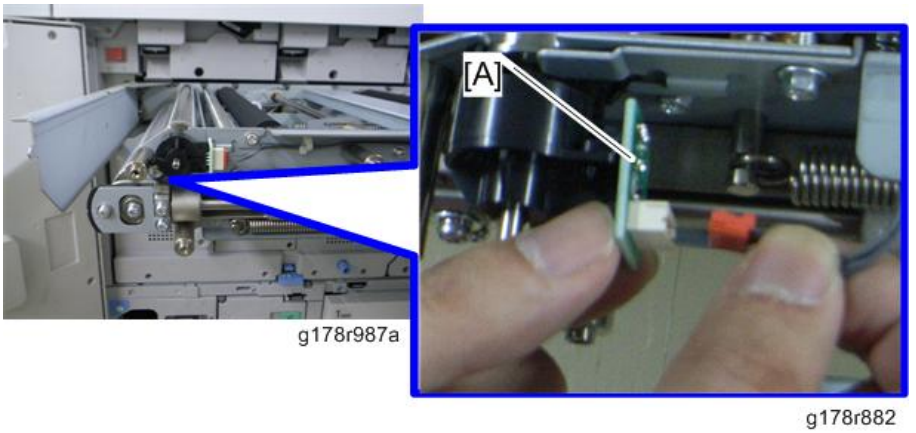

g178r882

2. Hold the sensor board [A] with your fingers when connecting the harness. Otherwise, the belt speed sensor may come off from the sensor board and the machine may not detect the belt speed correctly.

ITB Black and Color Lift Motors

1. Image transfer belt (page 440)

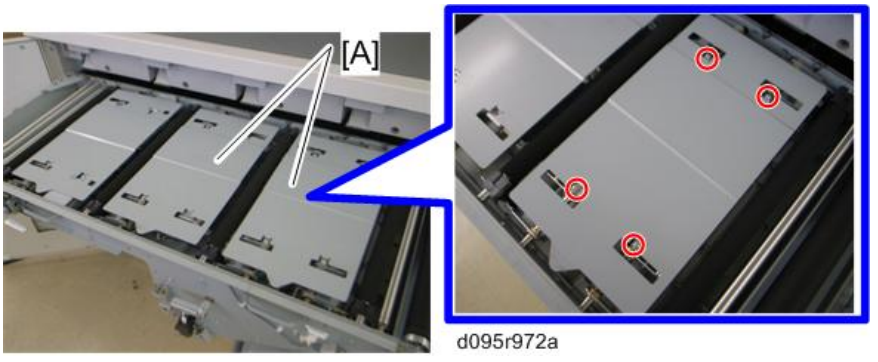

d095r972a

2. ITB unit center and right plates [A] (x 4 each)

g178r129

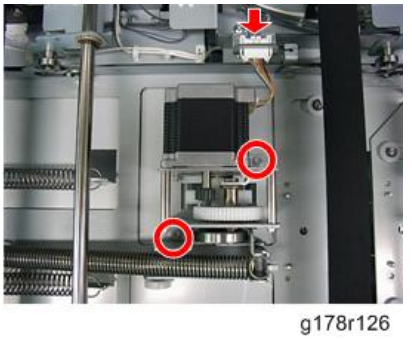

g178r126

3. ITB black lift motor bracket [A] (x 2, x 1)
4. ITB color lift motor bracket [B] (x 2, x 1)

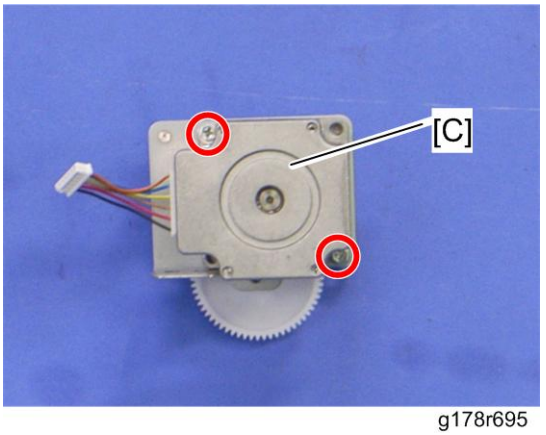

g178r695

5. ITB black or color lift motor [C] (x 2 each)

ITB Black and Color Lift Sensors

1. Image transfer belt (page 440)
2. ITB unit right plate (page 449 "ITB Black and Color Lift Motors")

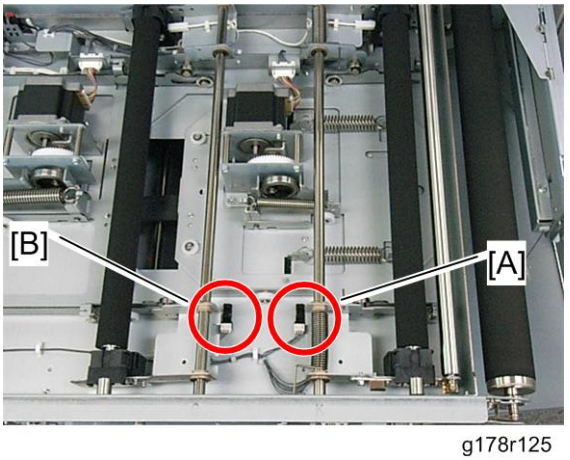

g178r125

3. ITB black lift sensor [A] (x 1, hooks)
4. ITB color lift sensor [B] (x 1, hooks)

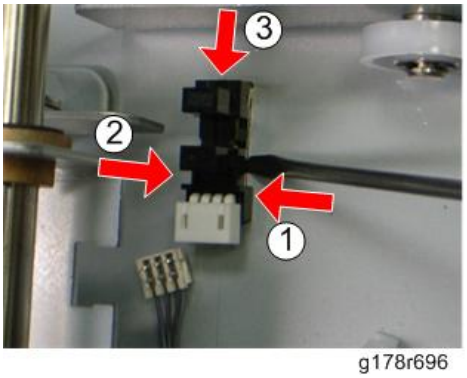

g178r696

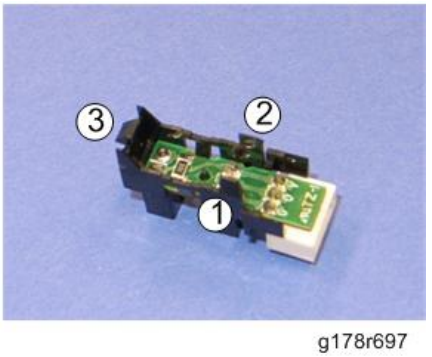

g178r697

5. Release three hooks as shown above.

Front and Rear Belt Overrun Sensors

1. Image transfer belt (page 440)
2. ITB unit center plate (page 449 "ITB Black and Color Lift Motors")

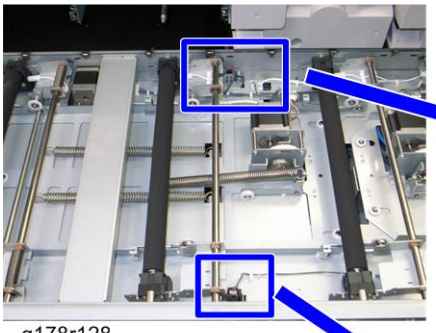

g178r128

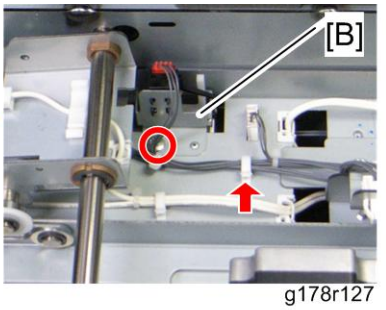

g178r127

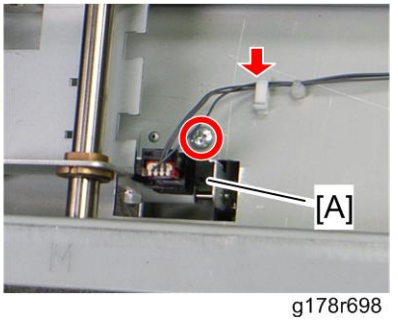

g178r698

3. Front ITB overrun sensor bracket [A] (x 1, x 1, x 1)
4. Rear ITB overrun sensor bracket [B] (x 1, x 1, x 1)

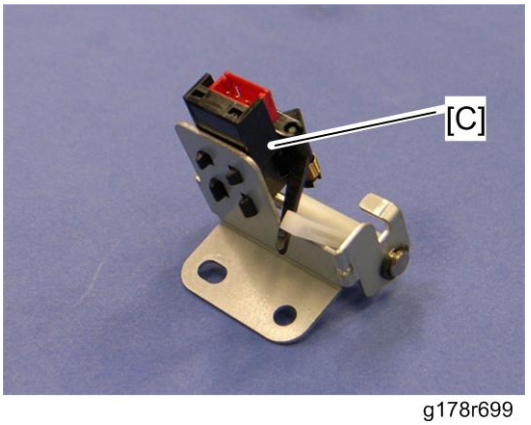

g178r699

5. Front or rear ITB overrun sensor [C] (hooks)

Belt Centering Sensor

1. ITB cleaning unit (page 434)
2. Pull out the ITB unit drawer to the full slide-out position (page 433).
3. Image transfer belt (page 440)

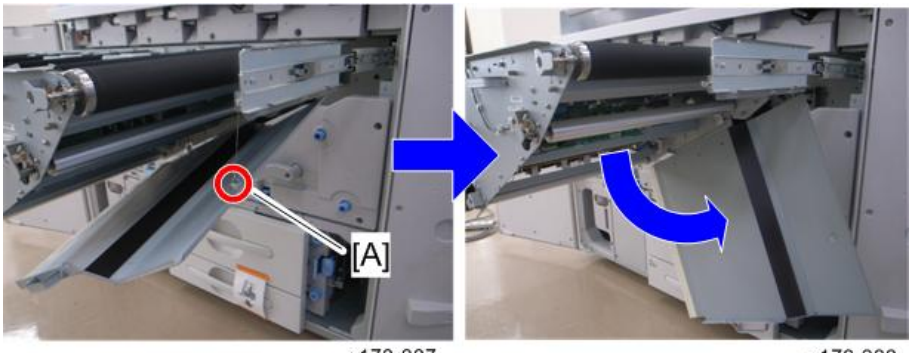

g178r387 g178r388

4. Release the hanging wire [A].

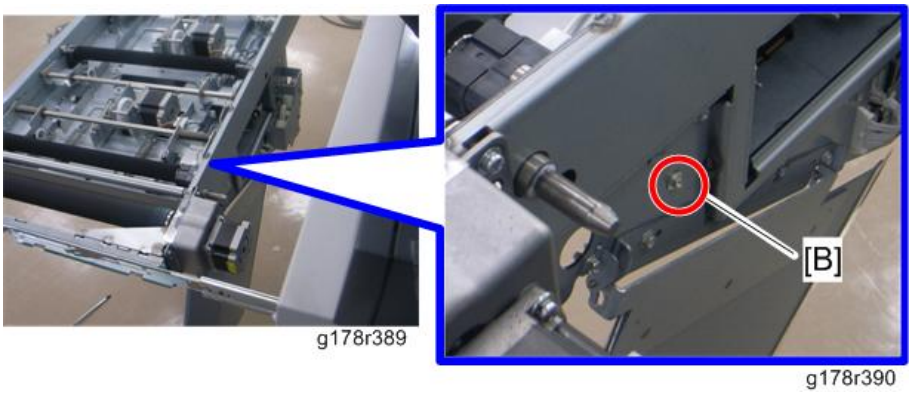

g178r389 g178r390

5. Remove the screw [B] for the belt centering sensor.

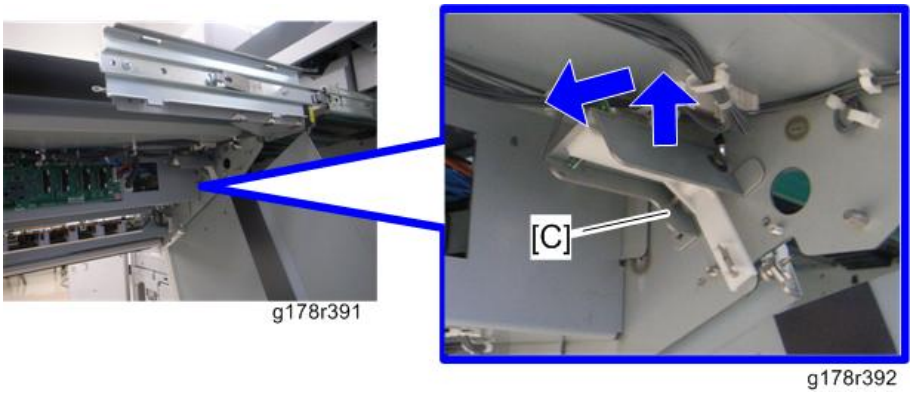

g178r391 g178r392

6. Belt centering sensor bracket [C] (x 1)

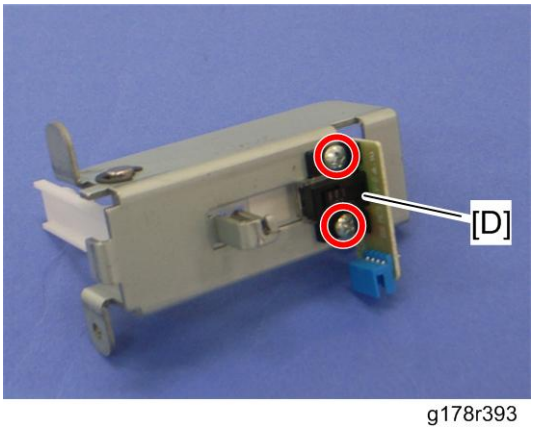

g178r393

7. Belt centering sensor [D] (x 2)

Image Transfer Rollers

1. Image transfer belt (page 440)

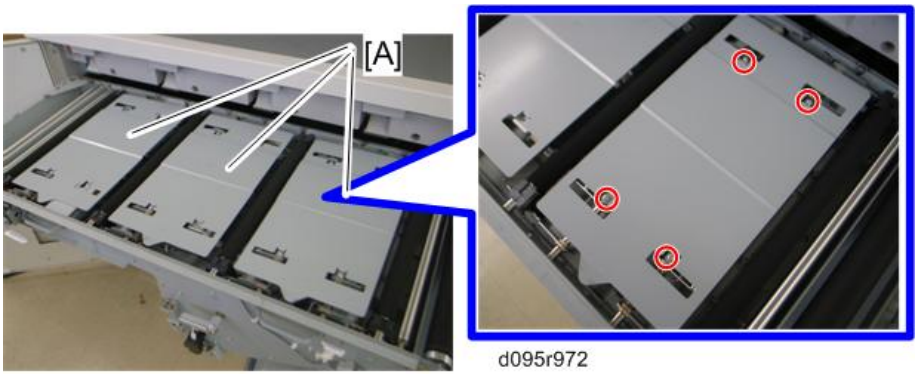

d095r972

2. ITB unit left, center and right plates [A] (x 4 each)

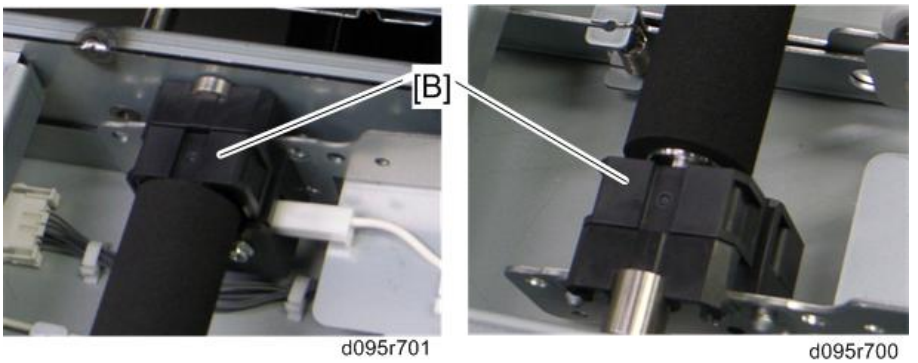

d095r701 d095r700

3. Front and rear Image transfer roller covers [B]

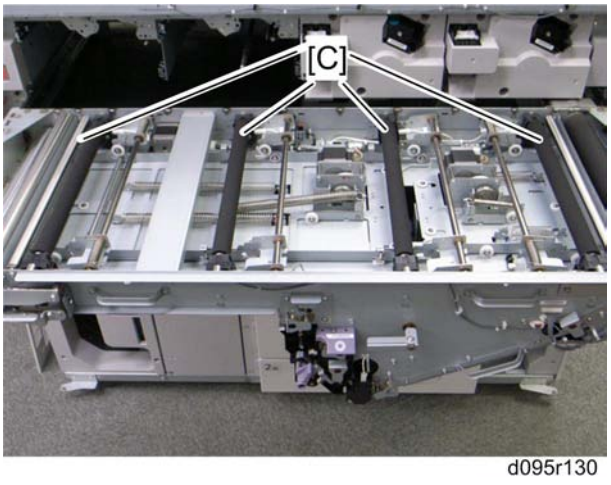

4. Image transfer rollers [C]

After installing new image transfer rollers

Clear the PM counter for the image transfer rollers. See "PM Parts Screen Details" in the chapter "Preventive Maintenance".

ITB Bias Roller

1. Image transfer belt (☛page 440)

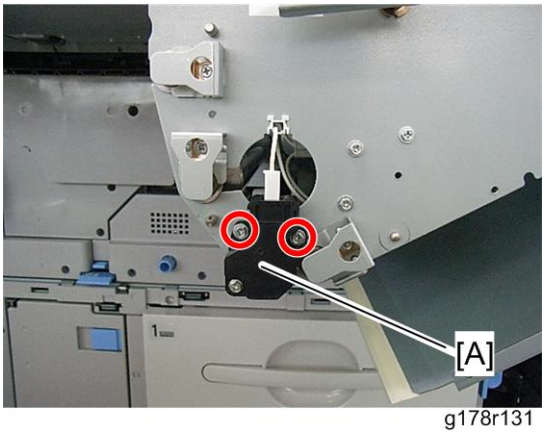

2. Bias terminal unit [A] (x 2)

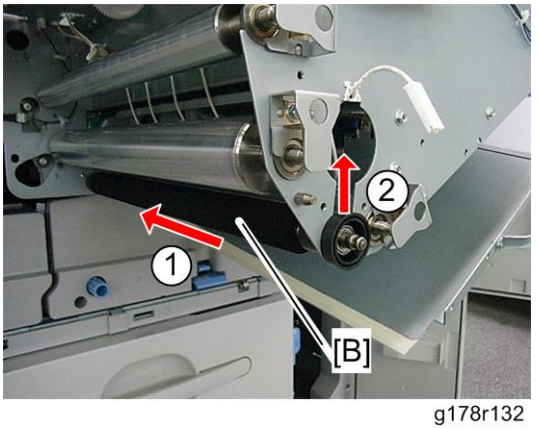

g178r132

3. ITB bias roller [B]

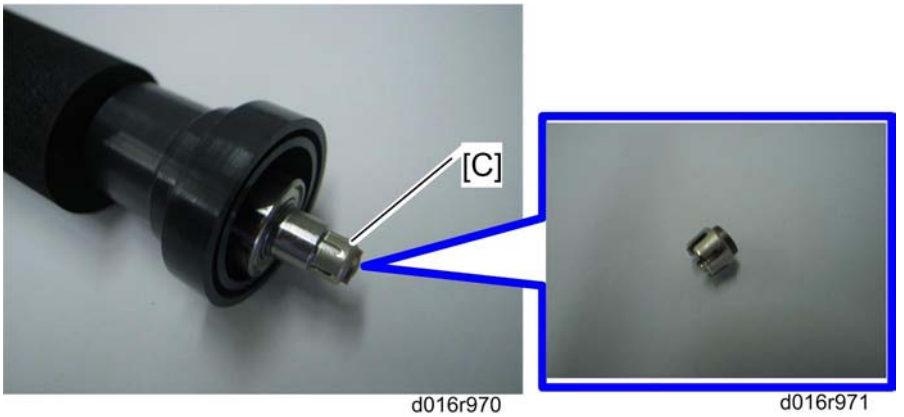

d016r970 d016r971

4. Remove the terminal [C] from the ITB bias roller.

Important

- **Attach the terminal [C] to a new ITB bias roller when installing a new ITB roller. Otherwise, SC450 may be issued.**

CAUTION

- This terminal [C] is easily broken because the terminal [C] is made of carbon. Never hit or cause an impact on the terminal.
- If the terminal is cracked or broken, replace it with a new one.

After installing a new ITB bias roller

Clear the PM counter for the ITB bias roller. See "PM Parts Screen Details" in the chapter "Preventive Maintenance".

ITB Cleaning Motor

1. ITB cleaning unit (page 434)
2. Pull out the ITB unit drawer to the full slide-out position (page 433).
3. Image transfer belt (page 440)

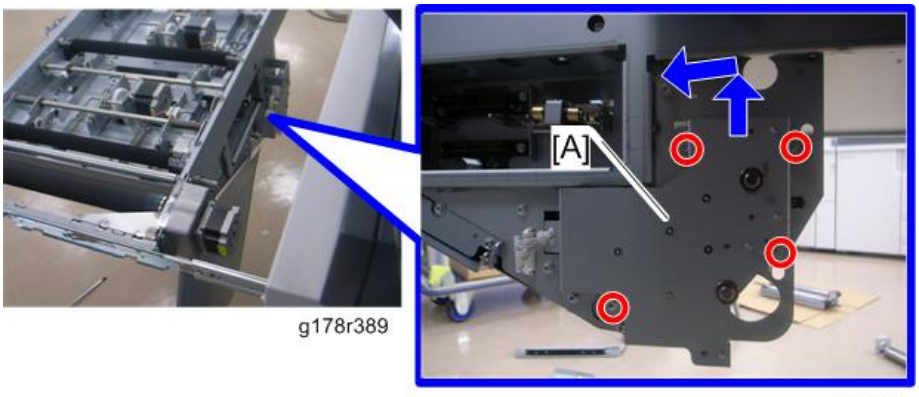

g178r389

g178r398

4. ITB cleaning gear unit [A] (x 4, x 1)

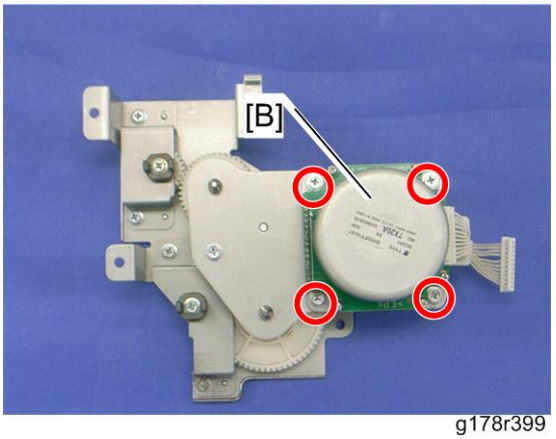

g178r399

5. ITB cleaning motor [B] (x 4, x 1)

ITB Cleaning Unit Set Sensor

1. ITB cleaning unit (page 434)
2. Pull out the ITB unit drawer to the full slide-out position (page 433).
3. Image transfer belt (page 440)

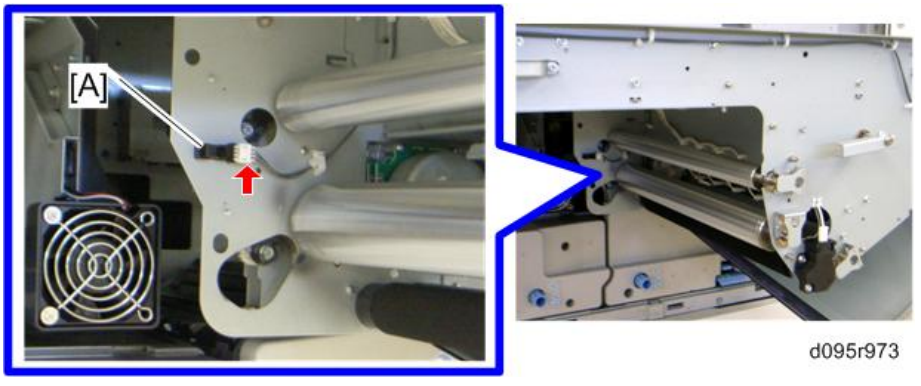

4. ITB cleaning unit set sensor [A] (x 1)

Belt Centering Roller Sensor

1. ITB cleaning unit (page 434)
2. Pull out the ITB unit drawer to the full slide-out position (page 433).
3. Image transfer belt (page 440)
4. ITB unit left plate (page 454 "Image Transfer Rollers ")

5. Sensor bracket [A] (x 2, x 1)

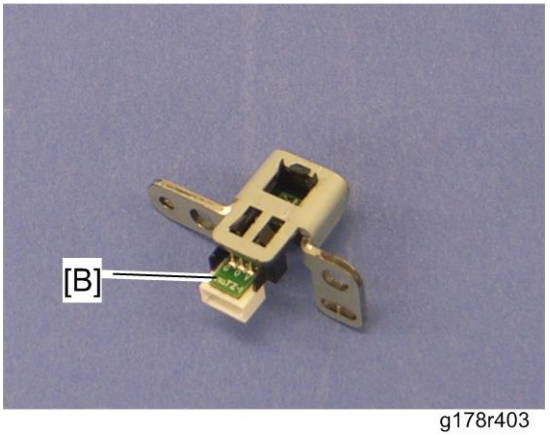

g178r403

6. Belt centering roller sensor [B] (hooks)

Belt Centering Roller Motor

1. ITB cleaning unit (☛page 434)
2. Pull out the ITB unit drawer to the full slide-out position (☛page 433).
3. Image transfer belt (☛page 440)
4. Sensor bracket (☛page 458 "Belt Centering Roller Sensor")

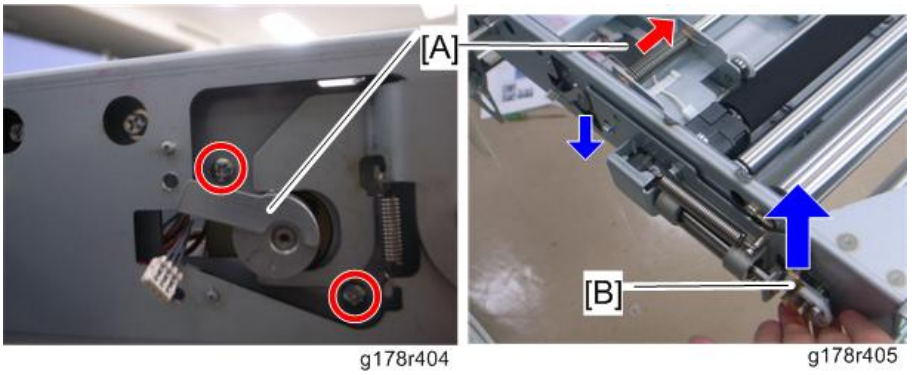

g178r404 g178r405

5. Pull out the belt centering roller motor [A] while lifting up the belt centering roller bracket [B] as shown (x 2, x 1)

TRB (Transfer Relay Board)

1. ITB cleaning unit (☛page 434)
2. Pull out the ITB unit drawer (☛page 432).
3. Image transfer belt (☛page 440)

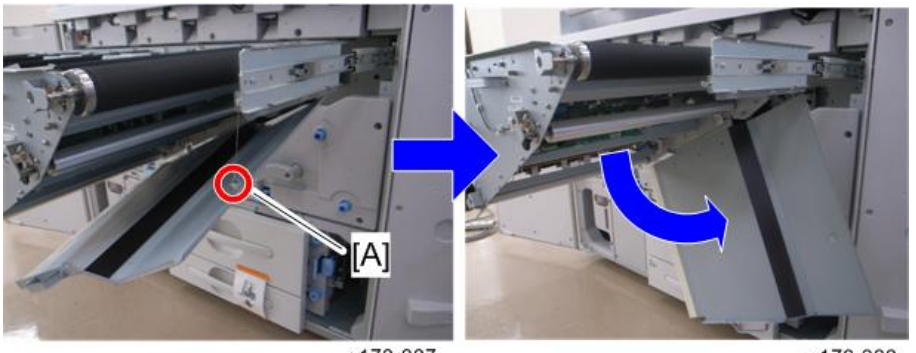

g178r387 g178r388

4. Release the hanging wire [A].

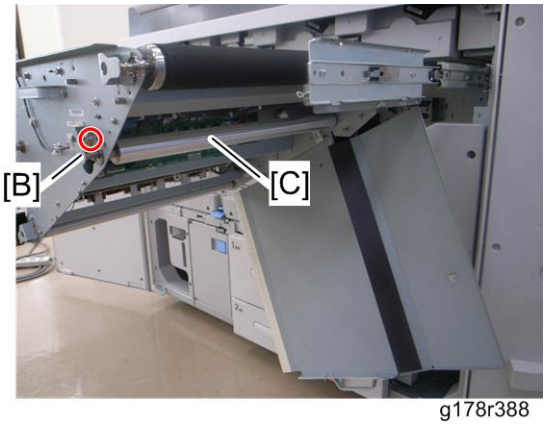

g178r388

5. Roller bracket [B] (x 1)
6. ID/MUSIC Sensor Roller [C]

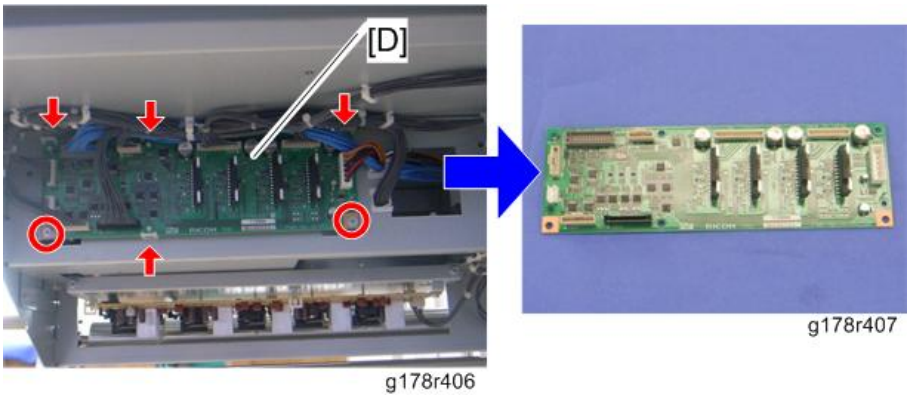

g178r406 g178r407

7. TRB [D] (x all, x 2, stud x 4)

Transfer HVPS

1. ITB cleaning unit (☛page 434)
2. Pull out the ITB unit drawer (☛page 432).
3. Image transfer belt (☛page 440)
4. Release the hanging wire (☛page 459 "TRB (Transfer Relay Board)").

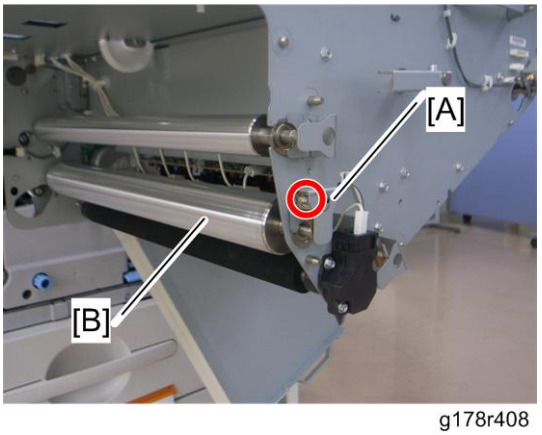

g178r408

5. Roller bracket [A] (x 1)
6. ITB cleaning idle roller [B]

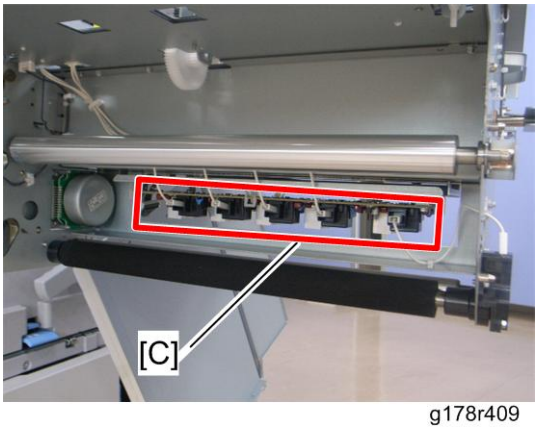

g178r409

7. Disconnect five cables [C] from the left side of the transfer HVPS.

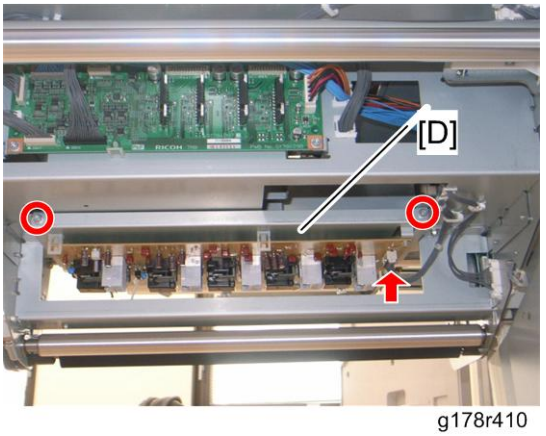

g178r410

8. Pull the transfer HVPS bracket [D] to the right side, and lower it (x 1, x 2)

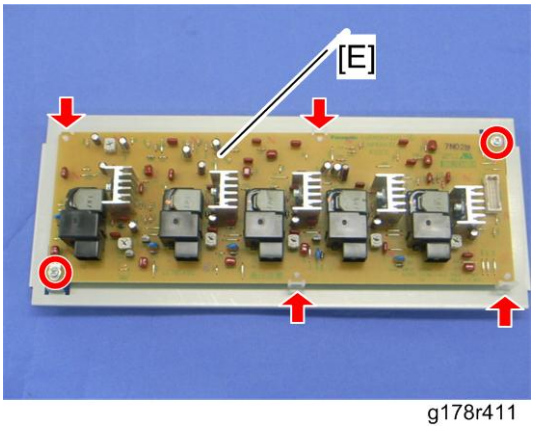

g178r411

9. Transfer HVPS [E] (x 2, stud x 4)

Paper Registration

Registration Unit Drawer

Pulling out the registration unit drawer

1. Open the left and right front doors.

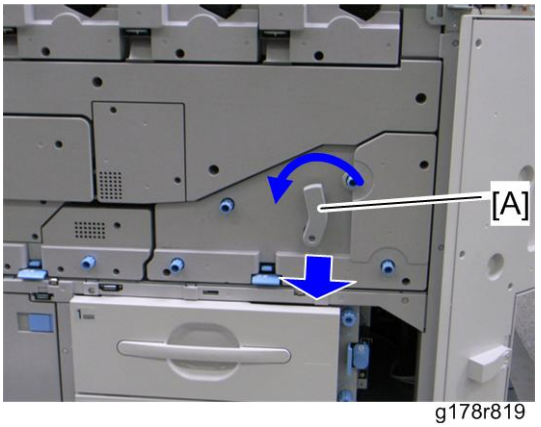

g178r819

2. Turn the lock lever [A] for the registration unit drawer counterclockwise, and then pull out the drawer.

Removing the registration unit drawer

⚠CAUTION

- This drawer unit is too heavy for one person to lift or move. Two people are required to lift or move this unit. This unit may cause serious injury to a service engineer or break itself if a service engineer drops it mistakenly.

1. Pull out the registration unit drawer.

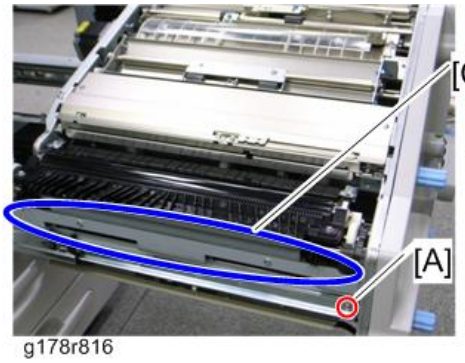

g178r816

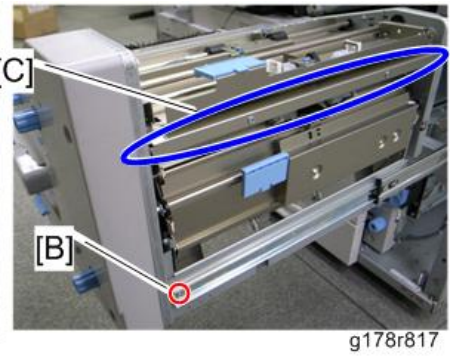

g178r817

2. Remove the screws [A] [B] at the right and left drawer rails.
3. Lift the registration unit drawer, and then remove it while grabbing the places [C] at the right and left sides of this unit.

Reinstalling the registration unit drawer

⚠CAUTION

- This drawer unit is too heavy for one person to lift or move. Two people are required to lift or move this unit. This unit may cause serious injury to a service engineer or break itself if a service engineer drops it mistakenly.

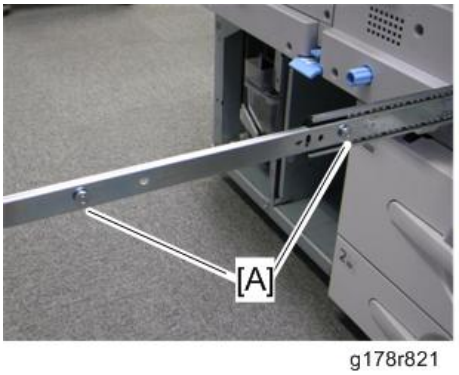

g178r821

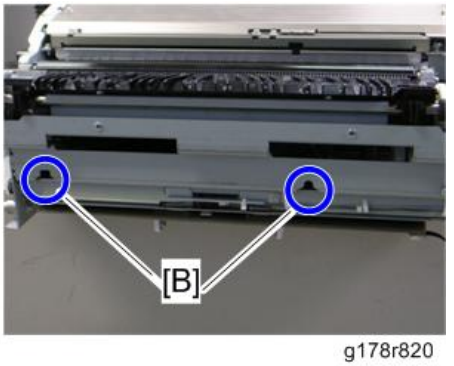

g178r820

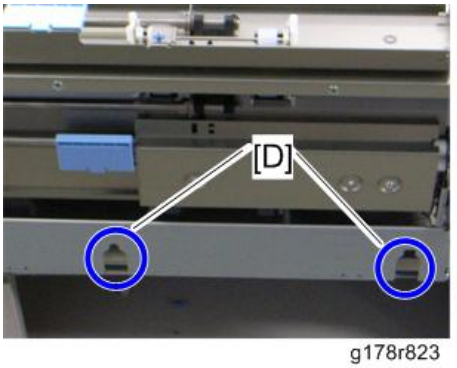

g178r823

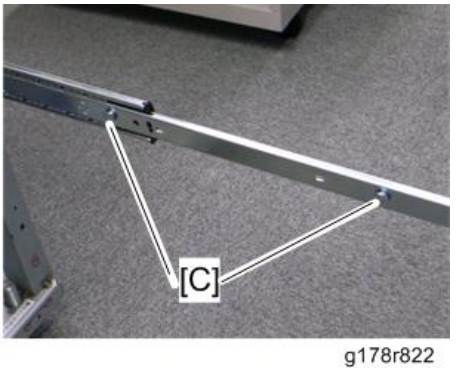

g178r822

1. Align the two tabs [A] on the left rail with the cutouts [B] at the left side of the registration unit drawer. At the same time, align the two tabs [C] on the right rail with the cutouts [D] at the right side of the registration unit drawer.
2. Lower the registration unit drawer slowly onto the rails.

Inner Registration Cover

1. Open the front right door.
2. Pull out the registration drawer unit (☛page 463).

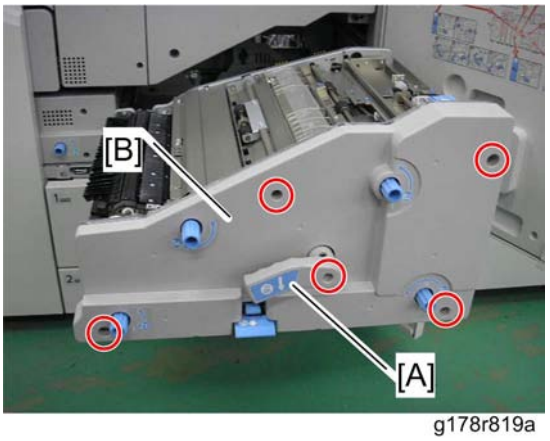

g178r819a

3. Lock lever [A] (x 1)
4. Inner registration cover [B] (x 4)

LCT Entrance Sensor

1. Pull out the registration unit drawer (☛page 463).

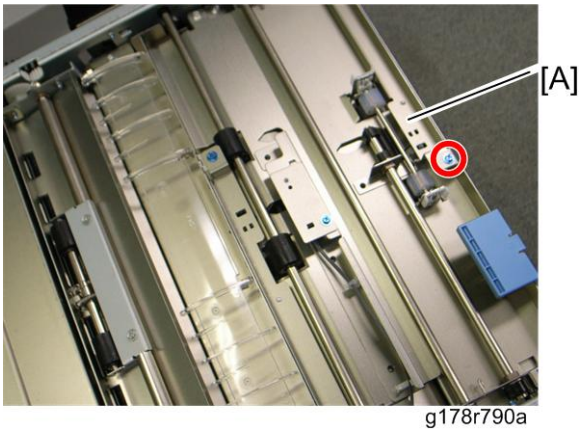

g178r790a

2. LCT entrance sensor bracket [A] (x 1, x 1, x 1)

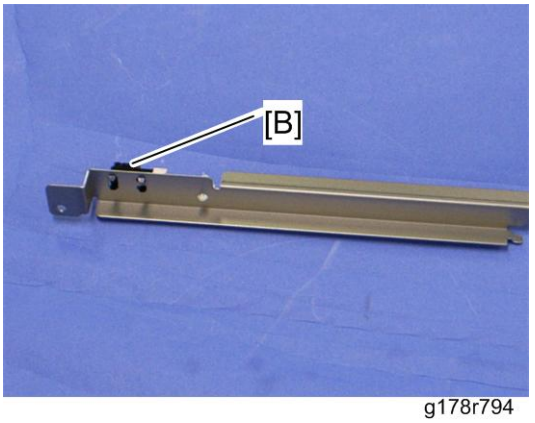

g178r794

3. LCT entrance sensor [B] (hooks)

Registration Timing Sensor

1. Pull out the registration unit drawer (page 463).

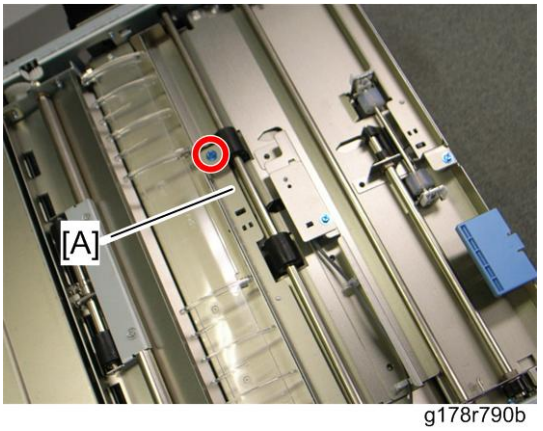

g178r790b

2. Registration timing sensor bracket [A] (x 1, x 3, x 1)

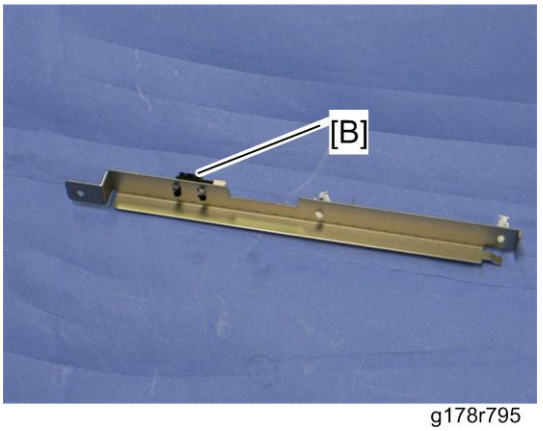

g178r795

3. Registration timing sensor [B] (Hooks)

Registration Entrance Sensor

1. Pull out the registration unit drawer (☛page 463).

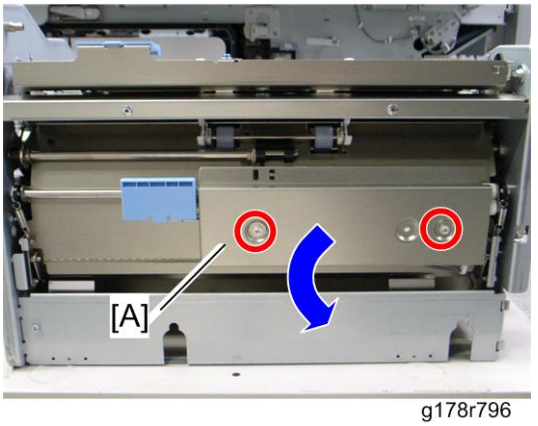

g178r796

2. Open the registration entrance sensor bracket [A] (x 2).

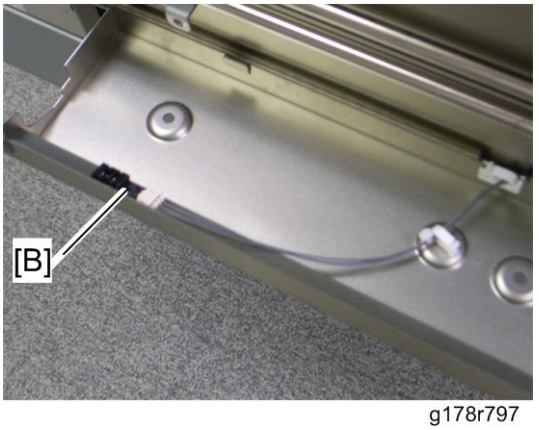

g178r797

3. Registration entrance sensor [B] (hooks)

Double-Feed Sensor

Double-Feed Sensor: Receptor

1. Pull out the registration unit drawer (page 463).

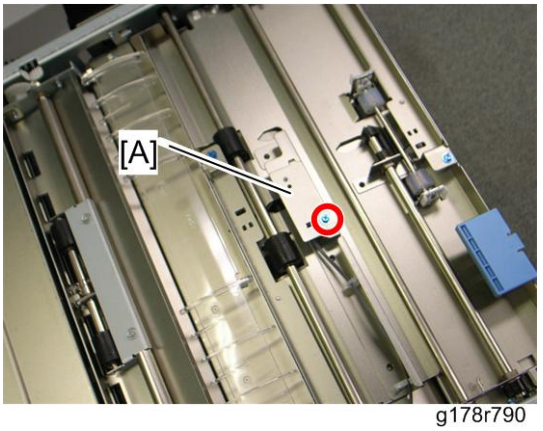

g178r790

2. Double-feed sensor bracket [A] (x 1, x 2, x 1)

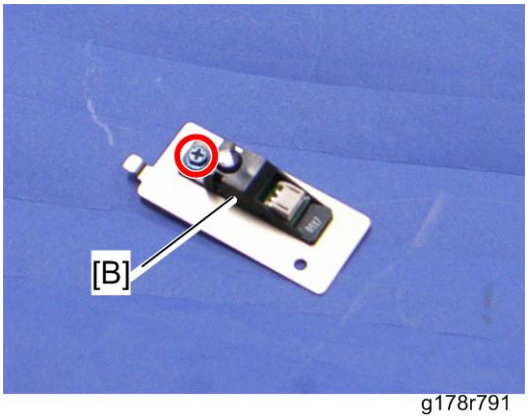

g178r791

3. Double-feed sensor: receptor [B]

Double-Feed Sensor: LED

1. Pull out the registration unit drawer (☛page 463).
2. Inner registration cover (☛page 465)

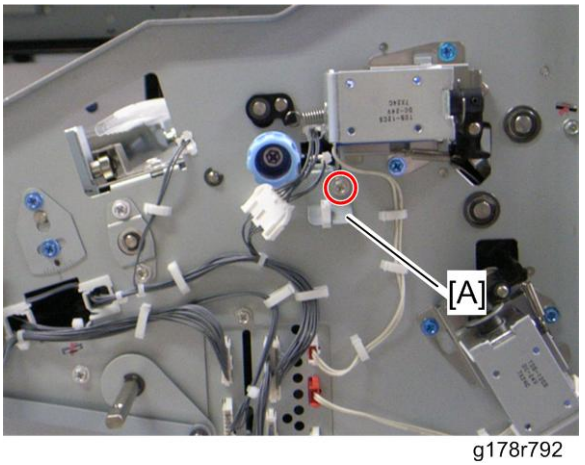

g178r792

3. Double-feed sensor bracket [A] (x 1, x 1, x 1)

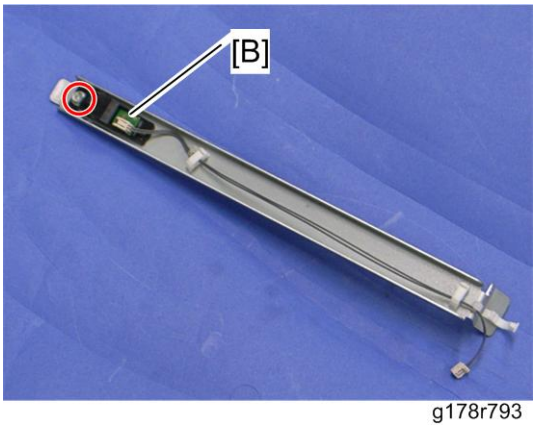

g178r793

4. Double-feed sensor: LED [B] (x 1, x 2, hooks, x 1)

CIS (Contact Image Sensor) Unit

1. Pull out the registration unit drawer (page 463).
2. Inner registration cover (page 465)

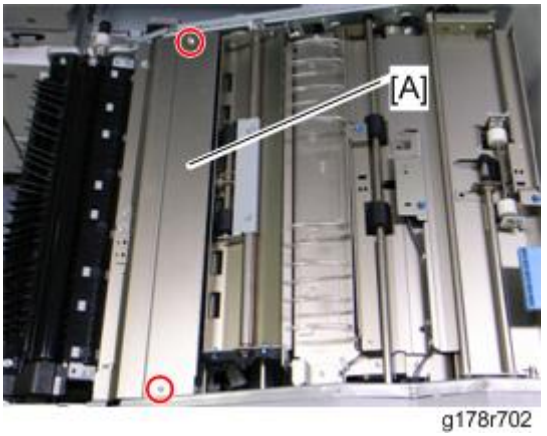

g178r702

3. Timing roller cover [A] (x 2)

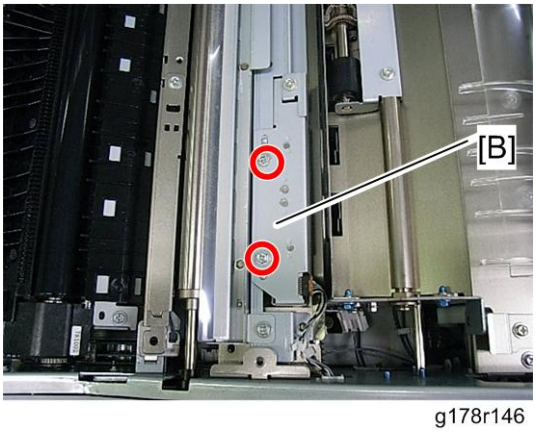

g178r146

4. CIS unit bracket [B] (x 2, x 1)

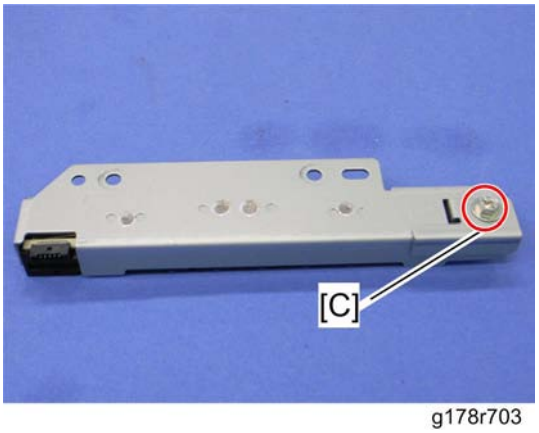

g178r703

5. CIS fixing bracket [C] (x 1)

Note:

When assembling the CIS unit bracket, slide the CIS fixing bracket [C] in the arrow direction.

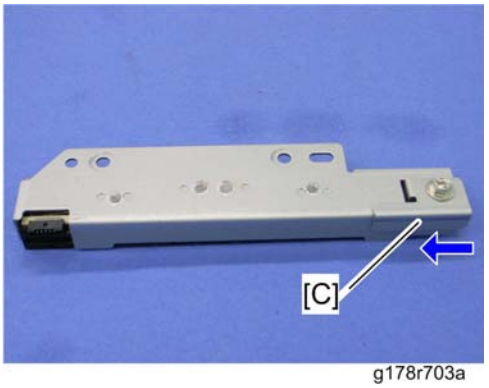

g178r703a

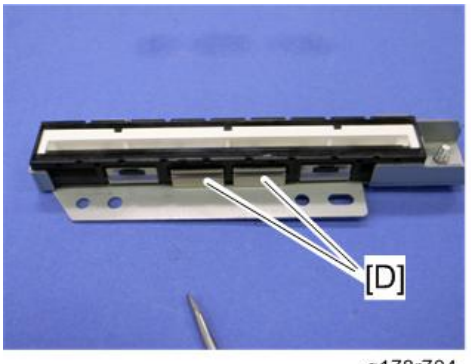

g178r704

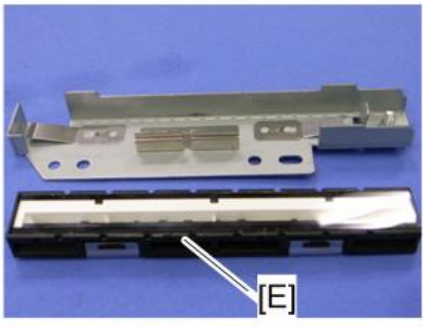

g178r705

6. Release the two hook plates [D]
7. CIS unit [E]

After installing a new CIS unit

1. Turn on the main power switch of the mainframe.
2. Enter the SP mode.
3. Pull out the registration drawer unit (☛page 463).

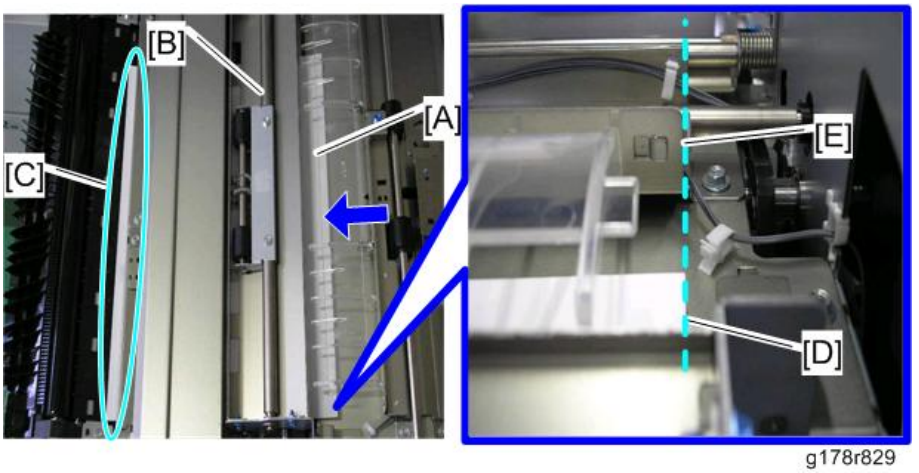

g178r829

4. Insert a sheet [A] of paper (A4 or LT SEF) under the shift roller unit [B].
5. Set the paper so that the leading edge [C] of the paper is visible and the front edge [D] of the paper is aligned with the front edge [E] of the registration timing sensor bracket.
6. Install the registration drawer unit in the machine and close the front cover.
7. Check that the value of SP1916-001 is set to "1.61".
8. Execute the "CIS LED Power Adjustment" with SP1912-001.
9. Exit the SP mode after the completion message of the "CIS LED Adjustment" has been displayed.

10. Pull out the registration drawer unit again, and then remove the sheet of paper from the registration unit.
11. Reassemble the machine.

Paper Dust Tray

1. Pull out the registration unit drawer (☛page 463).
2. Inner registration cover (☛page 465)

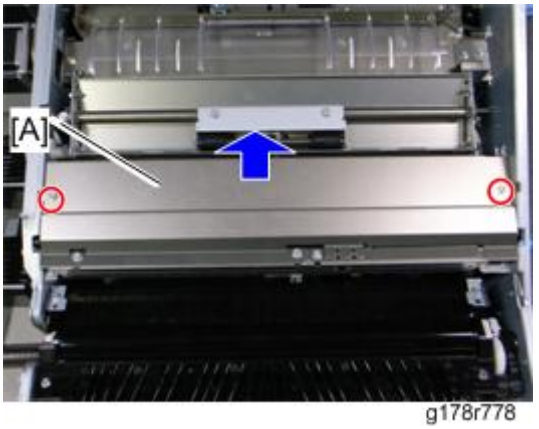

g178r778

3. Timing roller cover [A] (x 2)

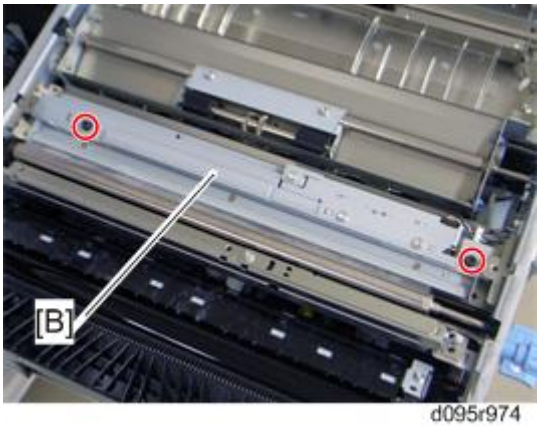

d095r974

4. Paper dust tray [B] (x 2)

Cleaning Requirement

The paper dust tray must be cleaned at 400 K intervals. Clean the area with a dry cloth.

Shift Roller Unit

1. Pull out the registration unit drawer (☛page 463).
2. Inner registration cover (☛page 465)
3. Paper dust tray (☛page 473)

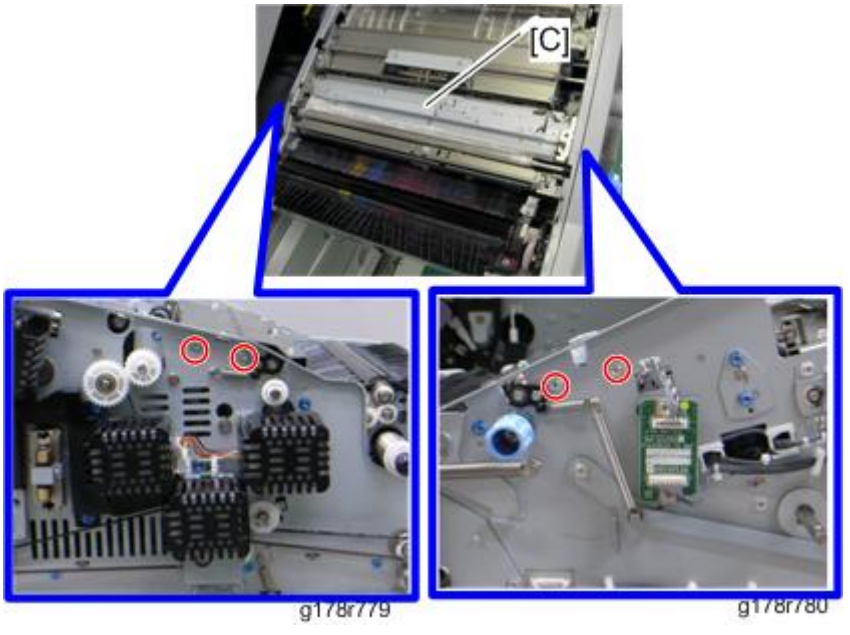

4. CIS base bracket [C] (x 4, x 1)

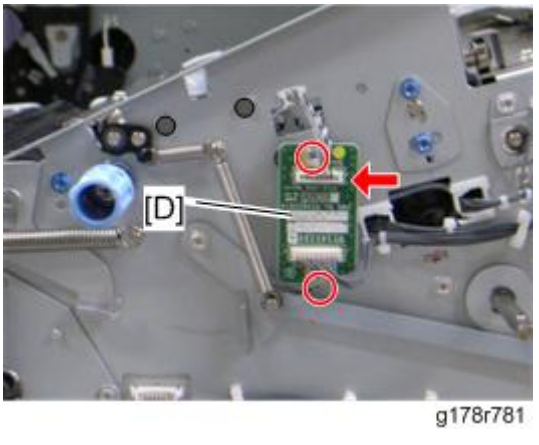

5. Relay board [D] (x 2, x 1)

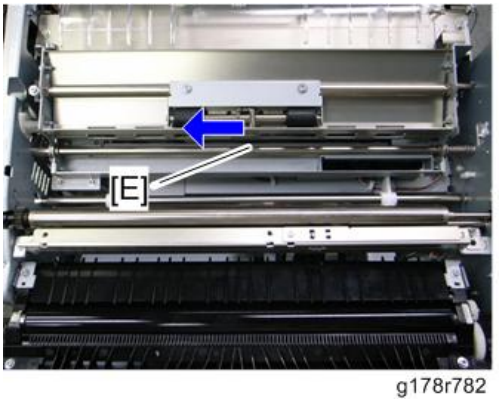

g178r782

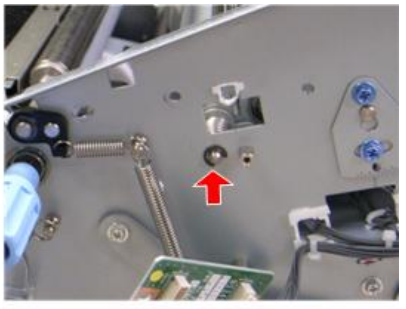

g178r783

6. Pull out the shift roller unit shaft [E] toward the rear side (ℰ x 1: front, spring x 1)

NOTE

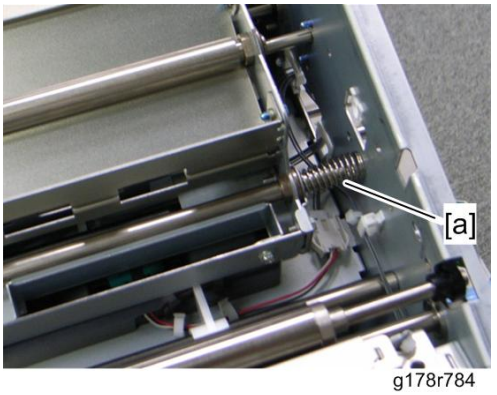

g178r784

- When the shift roller unit shaft is pulled out, the spring [a] may spring out. Hold the spring [a] with your hand when you pull out this shaft.

g178r785

g178r786

7. Rotate the shift roller unit motor [F] (it is actually under the shift roller unit) to move the shift roller unit [G] to the front side as far as possible.

g178r787

8. Wheel holder bracket [H] (x 1)

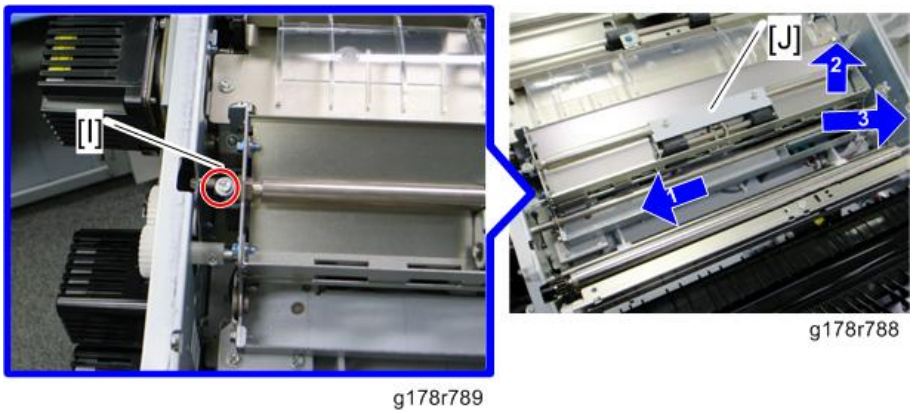

g178r788

g178r789

9. Shift roller lift lever [I] (x 1)
10. Shift roller unit [J]

Shift Roller Unit Motor

1. Shift roller unit (page 474)

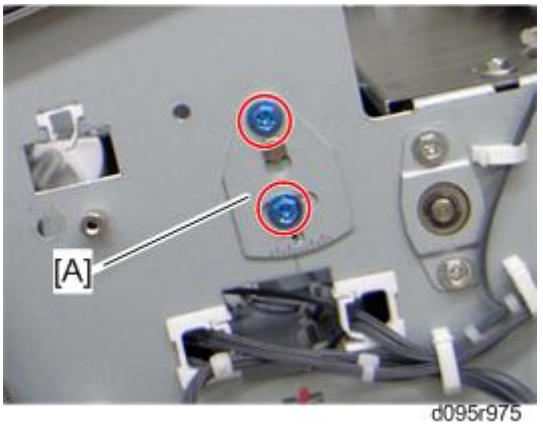

2. Skew correction adjuster [A] (x 2)

Important

- This adjuster is precisely adjusted at the factory. Mark the position of the skew correction adjuster as a reference for the adjustment position.

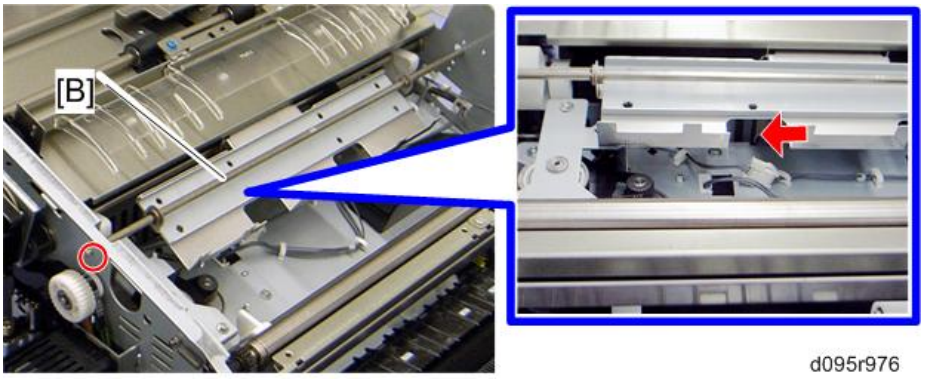

3. Registration gate [B] (x 1, spring x 1)

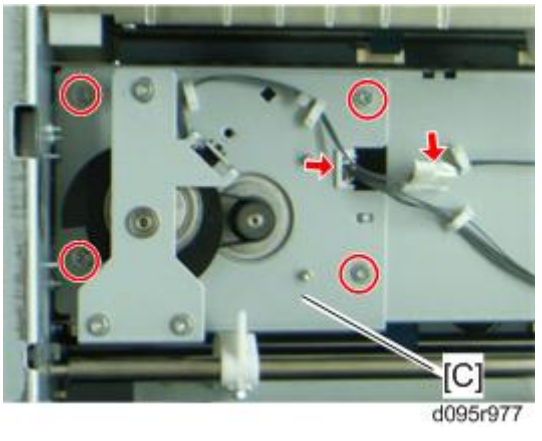

4. Shift roller unit motor bracket [C] (x 4, x 1, x 2)

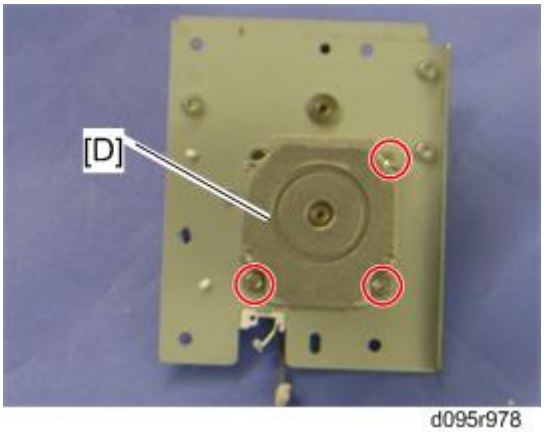

d095r978

5. Shift roller unit motor [D] (x 3, timing belt x 1)

Shift Roller HP Sensor

1. Shift roller unit (page 474)
2. Shift roller unit motor bracket (page 476)

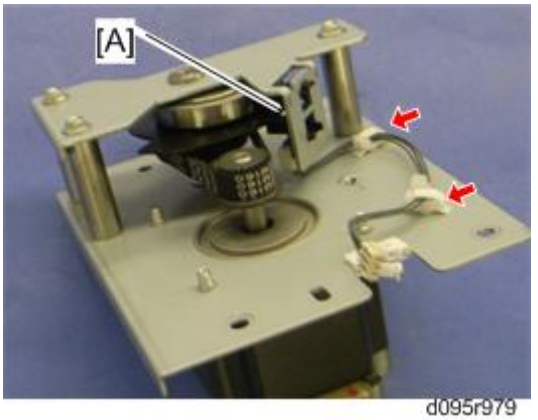

d095r979

3. Shift roller HP sensor [A] (x 2, hooks, x 1)

Registration Gate Lift Sensor

1. Shift roller unit (page 474)

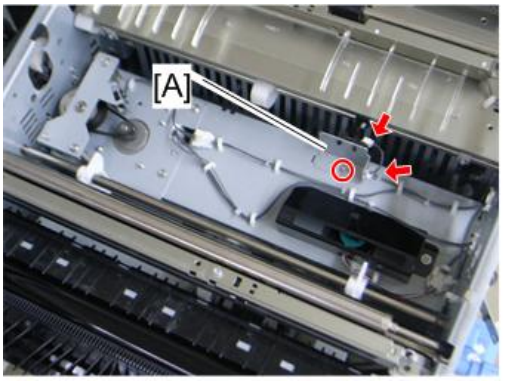

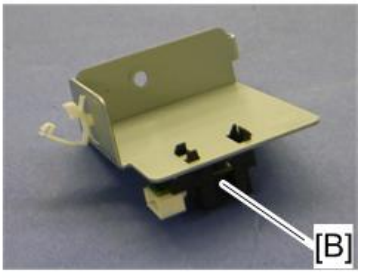

d095r980

2. Registration gate lift sensor bracket [A] (x 1, x 1, x 1)
3. Registration gate lift sensor [B] (hooks)

PTR Timing Sensor

1. Pull out the registration unit drawer (page 463).
2. Timing roller cover (page 470 "CIS (Contact Image Sensor) Unit")

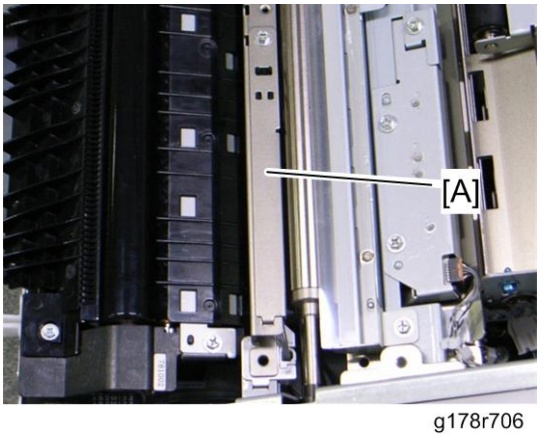

g178r706

3. PTR timing sensor bracket [A] (x 1, x 1)

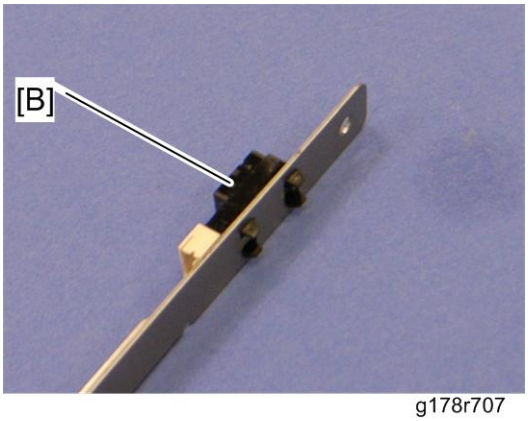

g178r707

4. PTR timing sensor [B] (hooks)

Registration Timing Motor

1. Registration unit drawer (☛page 463)
2. Inner registration cover (☛page 465)

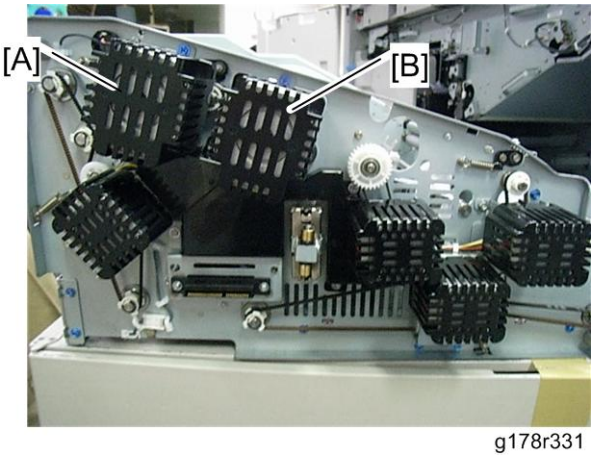

g178r331

3. Motor covers [A] for the registration timing motor (hooks) and [B] for the registration gate motor (hooks)

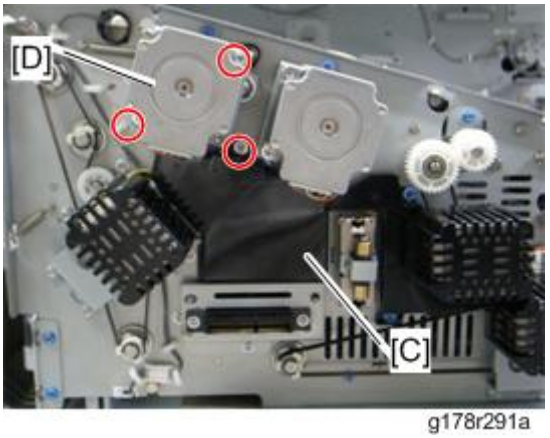

g178r291a

4. Large harness cover [C] (x 1)
5. Registration timing motor [D] (x 2, x 1)

Registration Gate Motor

1. Registration unit drawer (page 463)
2. Inner registration cover (page 465)

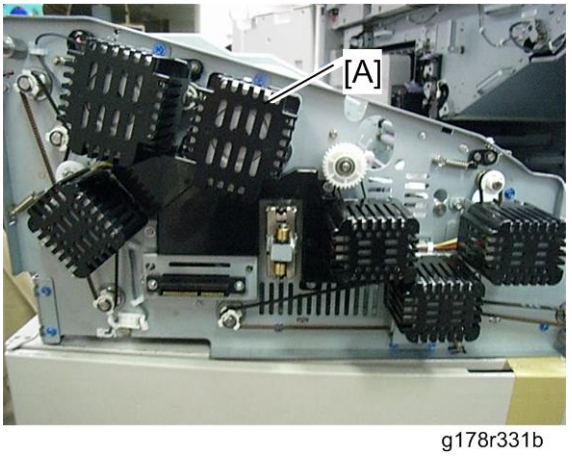

g178r331b

3. Motor cover[A] for the registration gate motor (hooks)

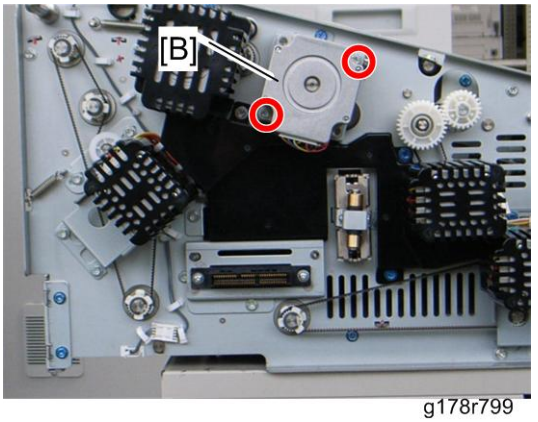

g178r799

4. Registration gate motor [B] (x 2, x 1)

Registration Entrance Motor

1. Registration unit drawer (page 463)
2. Inner registration cover (page 465)

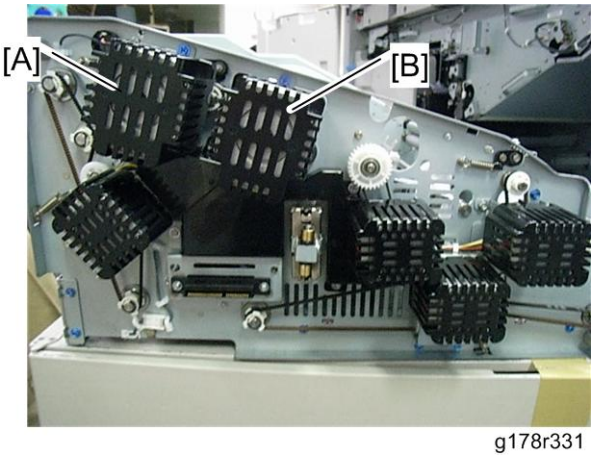

g178r331

3. Motor covers [A] [B]

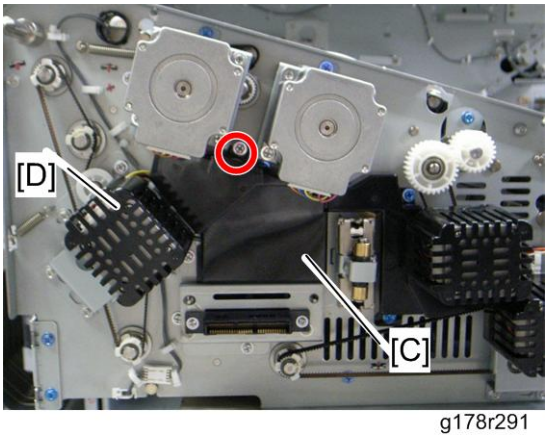

g178r291

4. Large harness cover [C] (x 1)
5. Motor cover [D] for the registration entrance motor (hooks)

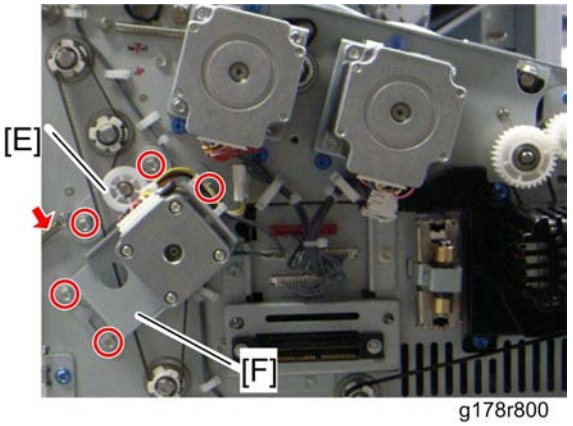

g178r800

6. Tension pulley bracket [E] (x 2, spring x 1)

Note

- When reinstalling the tension pulley bracket [E], first secure the tension pulley bracket temporarily and then install the spring. Tighten two screws on the tension pulley bracket after installing the spring.

7. Registration entrance motor bracket [F] (x 2, x 3, x 1)

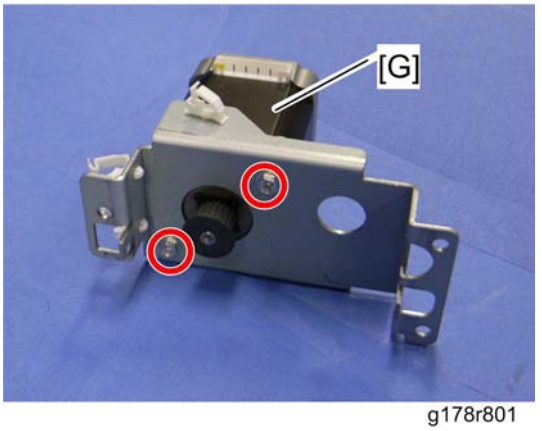

g178r801

8. Registration unit entrance motor [G] (x 2)

Shift Roller Motor

1. Registration unit drawer (page 463)
2. Inner registration cover (page 465)
3. Large harness cover (page 482 "Registration Entrance Motor")

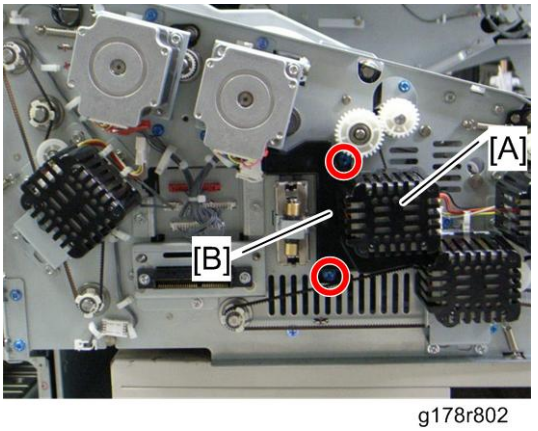

g178r802

4. Motor cover [A] for the shift roller motor (hooks)
5. Small harness cover [B] (x 2)

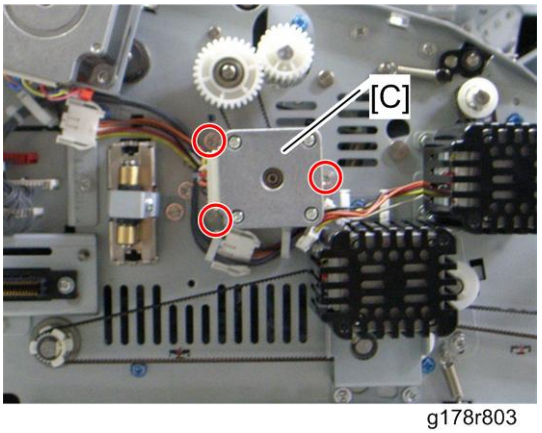

g178r803

6. Shift roller motor bracket [C] (x 1, x 3, x 1)

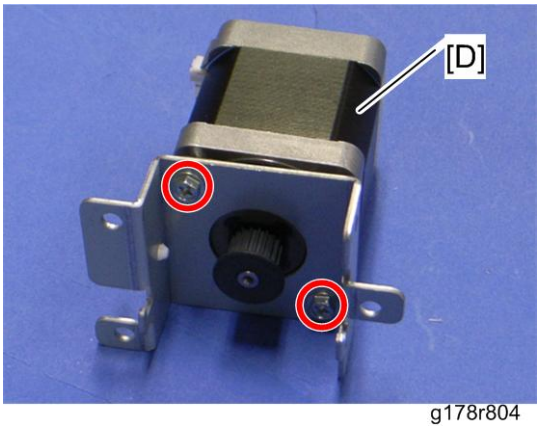

g178r804

7. Shift roller motor [D] (x 2)

Duplex Transport Motor 2

1. Registration unit drawer (page 463)
2. Inner registration cover (page 465)

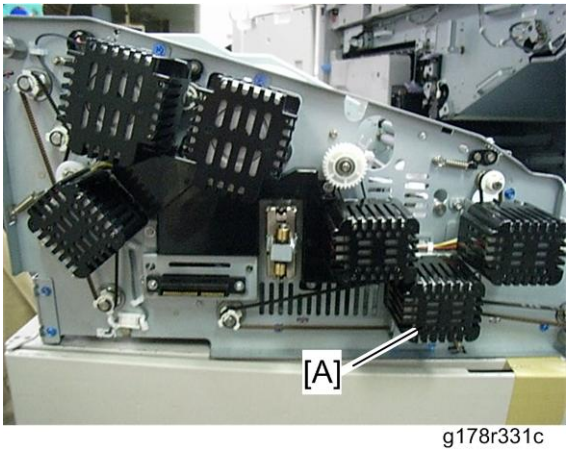

g178r331c

3. Motor cover [A] for the duplex transport motor 2 (hooks)

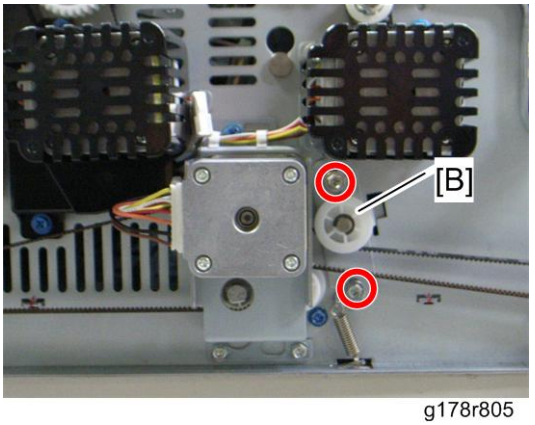

g178r805

4. Tension pulley bracket [B] (x 2, spring x 1)

Note

- When reinstalling the tension pulley bracket [E], first secure the tension pulley bracket temporarily and then install the spring. Tighten two screws on the tension pulley bracket after installing the spring.

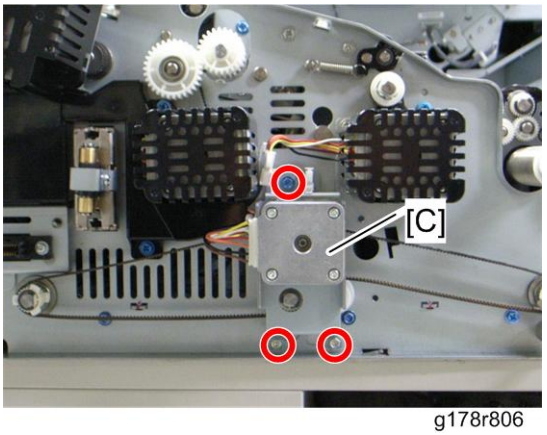

g178r806

5. Duplex transport motor 2 bracket [C] (x 3, x 3, x 1)

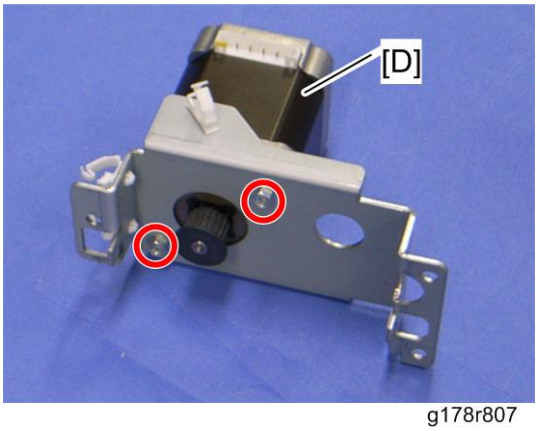

g178r807

6. Duplex transport motor 2 [D] (x 2)

PTR Timing Motor

1. Registration unit drawer (page 463)
2. Inner registration cover (page 465)

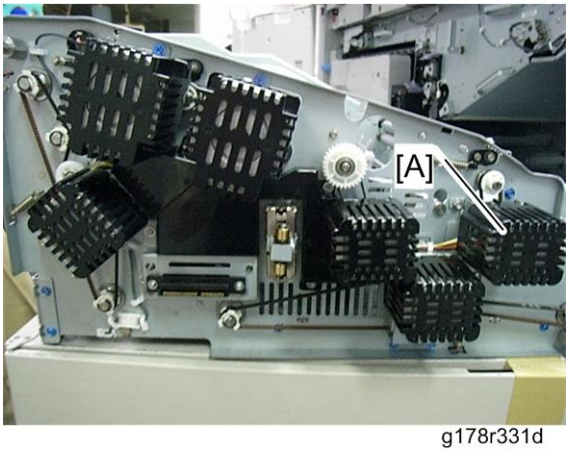

g178r331d

3. Motor cover [A] for the PTR motor (hooks)

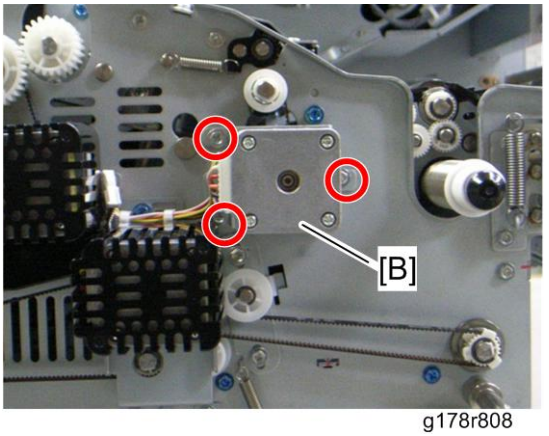

g178r808

4. PTR timing motor bracket [B] (x 3, x 1)

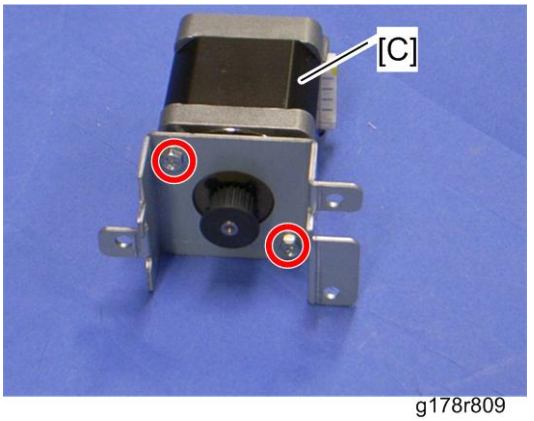

g178r809

5. PTR timing motor [C] (x 2)

Duplex Transport Sensor 3 and 4

Duplex Transport Sensor 3

1. Pull out the registration unit drawer (☛page 463).

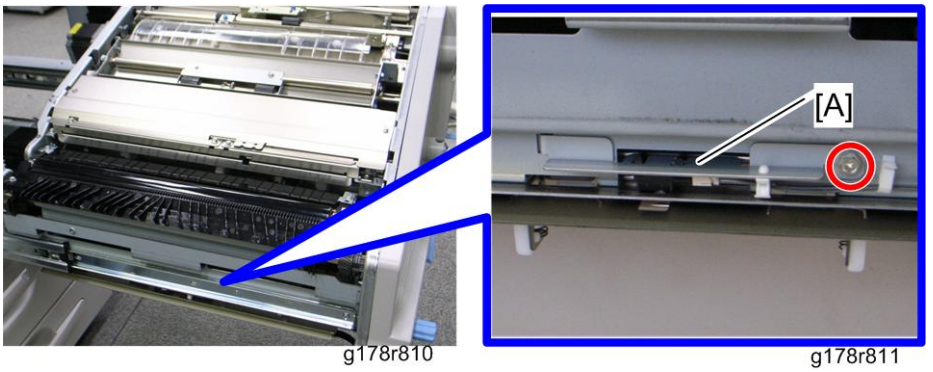

g178r810 g178r811

2. Duplex transport sensor 3 bracket [A] (x 1, x 2, x 1)

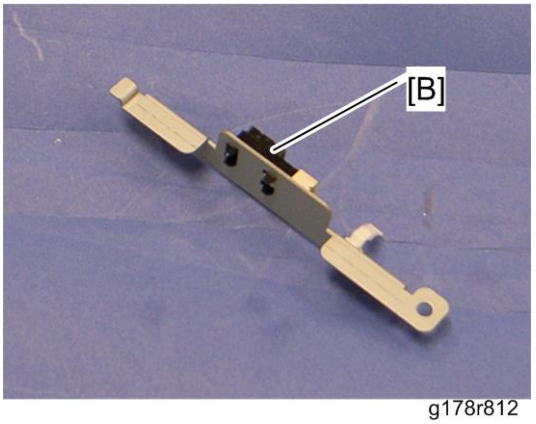

g178r812

3. Duplex transport sensor 3 [B] (hooks)

Duplex Transport Sensor 4

1. Pull out the registration unit drawer (☛page 463).
2. Inner registration cover (☛page 465)

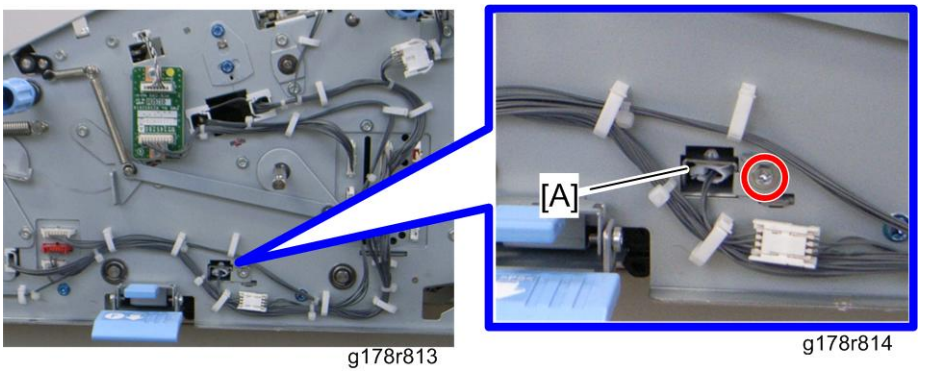

g178r813 g178r814

3. Duplex transport sensor 4 bracket [A] (x 1, x 1, x 1)

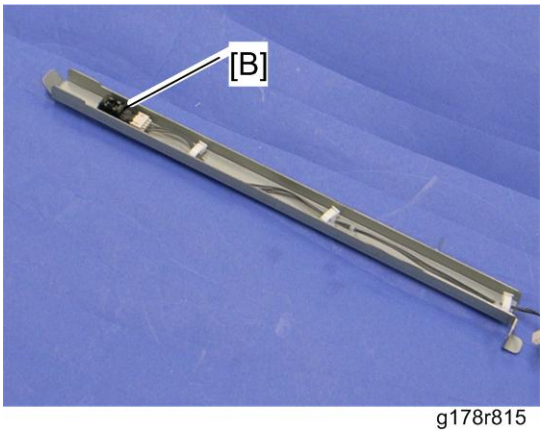

g178r815

4. Duplex transport sensor 4 [B] (x 3, x 1, hooks)

PTR Motor

1. Pull out the registration unit drawer (page 463).
2. Inner registration cover (page 465)

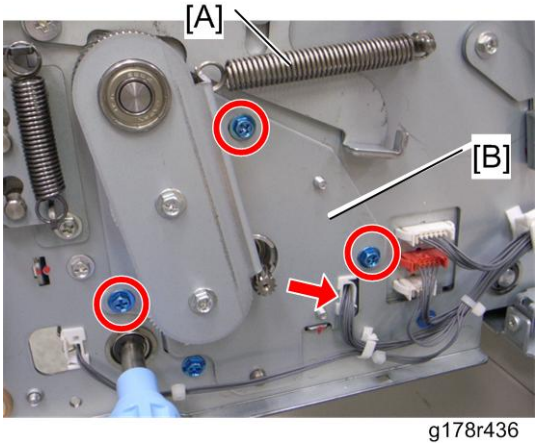

g178r436

3. Remove the tension spring [A].
4. PTR motor bracket [B] (x 3, x 1, x 1)

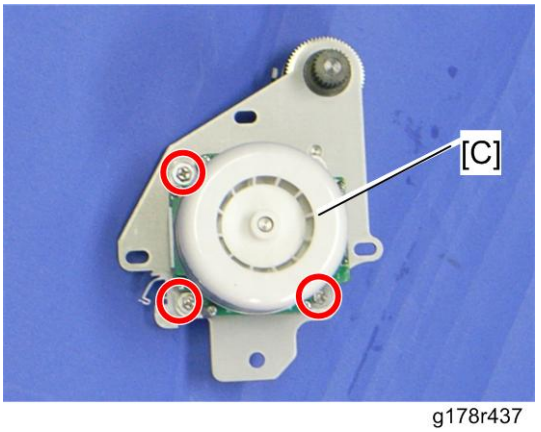

g178r437

5. PTR motor [C] (x 3)

Separation HVPS

1. PTR motor (page 490)
2. PTR unit (page 496 "PTR (Paper Transfer Roller) Unit")

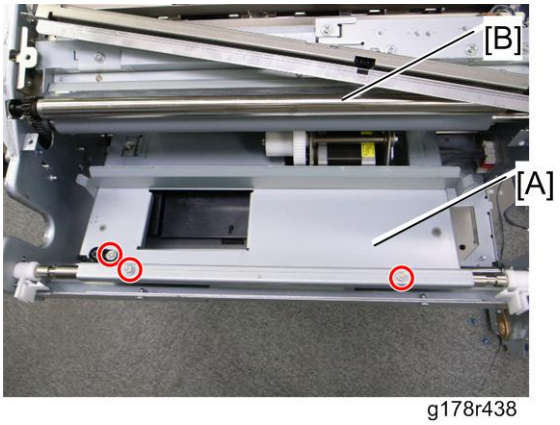

g178r438

3. PTR unit lift plate [A] (x 3)

Note

- This plate is strongly pressed by two arms under the timing roller [B].

d095r440

d095r441

4. PTR lift motor bracket [C] (x 1, x 3)

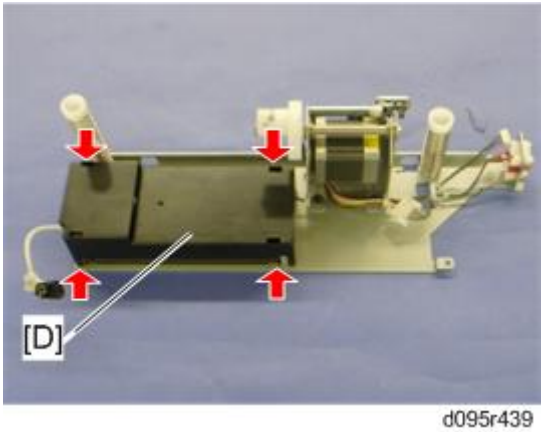

d095r439

5. Separation HVPS cover [D] (hook x 4)

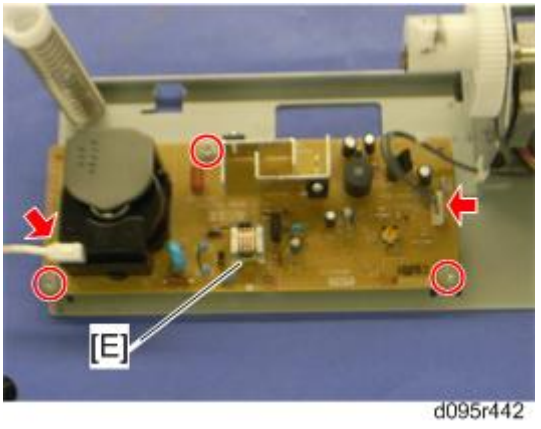

6. Separation HVPS [E] (x 3, x 2)

PTR Lift Motor

1. PTR lift motor bracket (page 491 "Separation HVPS")

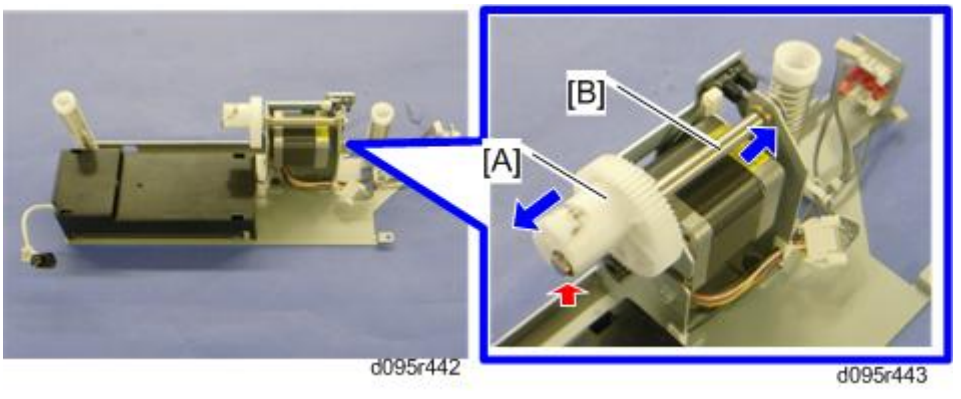

2. Cam gear [A] (x 1)
3. PTR lift sensor shaft [B] (bushing x 1)

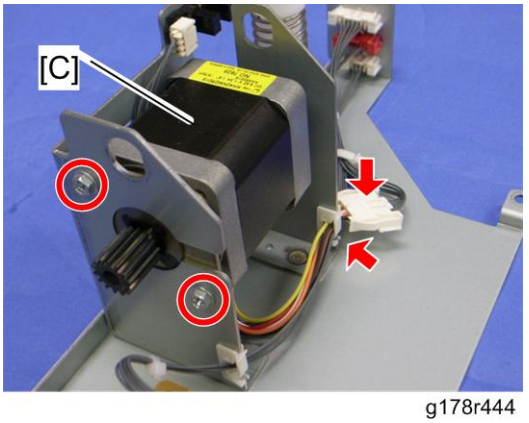

g178r444

4. PTR lift motor [C] (x 2, x 1, x 1)

PTR Lift Sensor

1. PTR lift motor bracket (page 491 "Separation HVPS")
2. PTR lift sensor shat (page 493 "PTR Lift Motor")

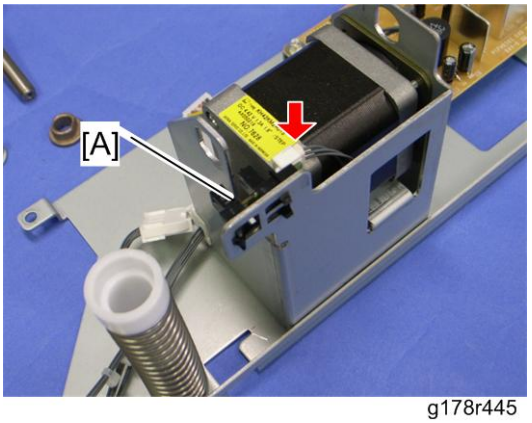

g178r445

3. PTR lift sensor [A] (hooks, x 1)

RCB

1. Registration unit drawer (page 463)
2. Inner registration cover (page 465)
3. Motor covers and large harness cover (page 480 "Registration Timing Motor")

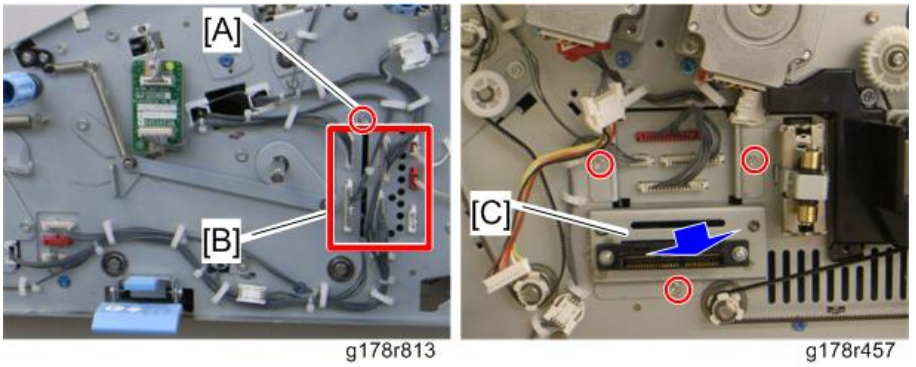

g178r813 g178r457

4. Remove the screw [A] and all connectors [B] on the front frame of the registration drawer unit.
5. Pull out the RCB unit [C] (x 3, x all).

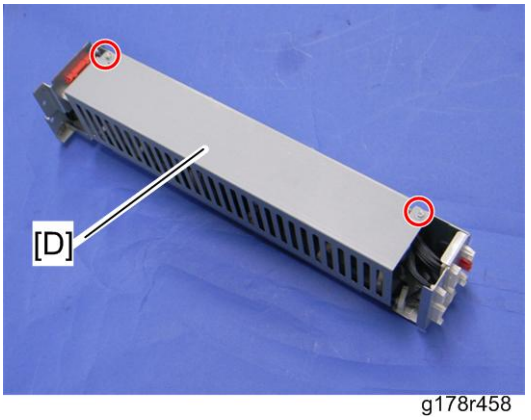

g178r458

6. RCB unit top cover [D] (x 2)

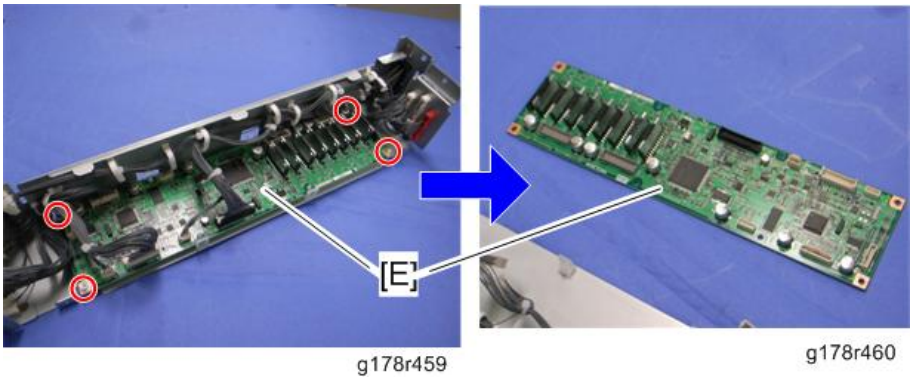

g178r459 g178r460

7. RCB [E] (x 4, x all, x all))

Paper Transfer

Important

- For some PM parts, automatic adjustment will be executed after clearing the PM counter (☛ page 321 "PM Parts Screen Details"). Open one of the front doors, and then close it after clearing the PM counter. The door open/close will execute the automatic adjustment for the replaced PM parts.

PTR (Paper Transfer Roller) Unit

1. Pull out the registration unit drawer (☛ page 463).

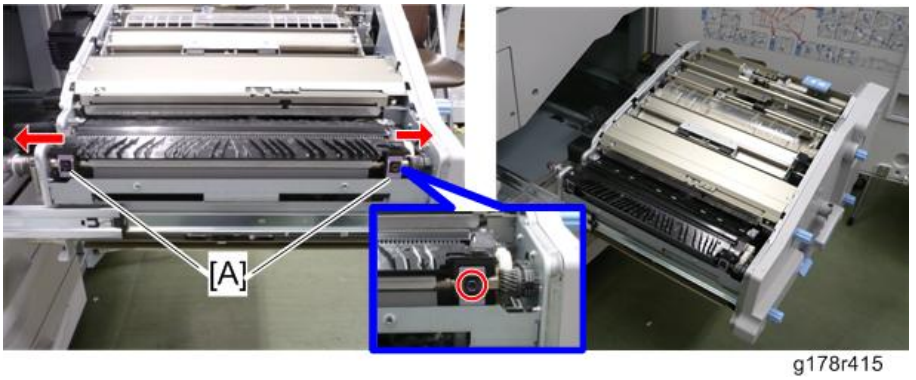

g178r415

2. Release the rear lock and front lock [A] (x 1 each).

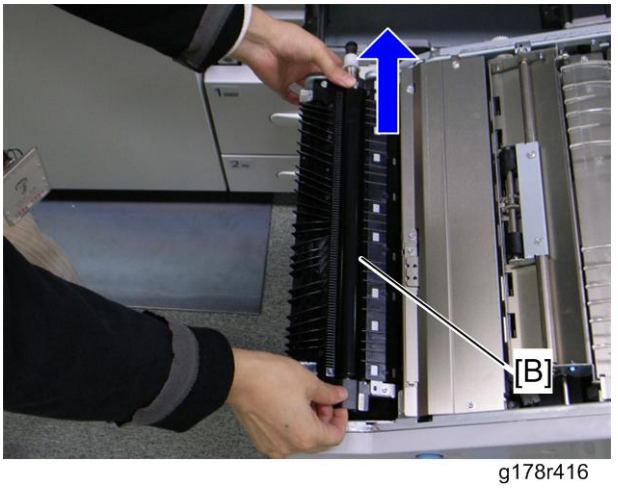

g178r416

3. PTR (paper transfer roller) unit [B]

Note

- To avoid toner spillage while handling the PTR unit, always keep the PTR unit level.

After installing a new paper transfer roller unit

Clear the PM counter for the PTR unit. See "PM Parts Screen Details" in the chapter "Preventive Maintenance".

PTR Entrance Mylar Cleaning Procedure

1. Pull out the ITB unit drawer (☛page 432)

2. Clean the PTR entrance mylar [A] with a cloth and alcohol.

Cleaning Requirement

This mylar must be cleaned at 400 K intervals.

PTR Lubricant Bar

1. PTR unit (☛page 496)

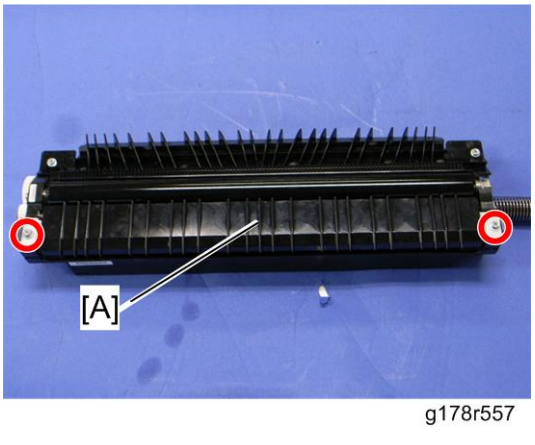

2. Right paper guide plate [A] (x 2)

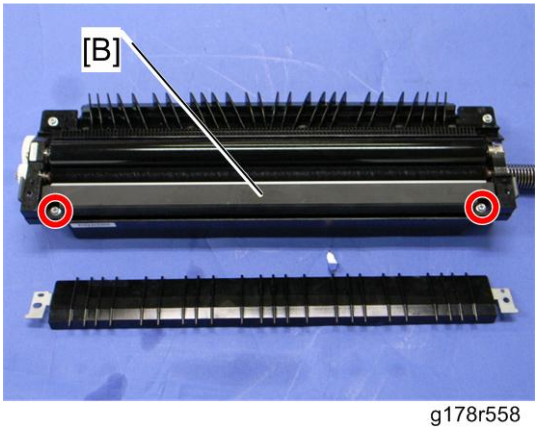

g178r558

3. PTR lubricant bar unit [B] (x 2)

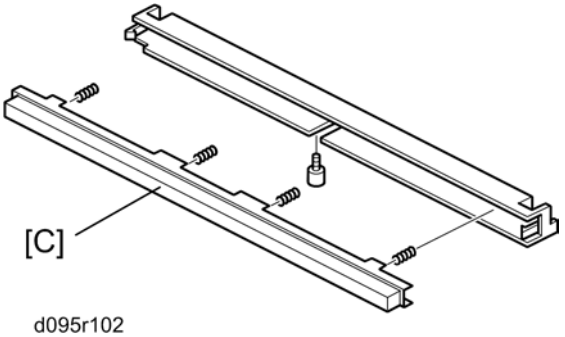

d095r102

4. PTR lubricant bar [C] (x 1, spring x 4)

After installing a new PTR lubricant bar

Clear the PM counter for the PTR lubricant bar. See "PM Parts Screen Details" in the chapter "Preventive Maintenance".

PTR Lubricant Brush Roller

1. PTR unit (page 496)
2. PTR Lubricant Bar (page 497)

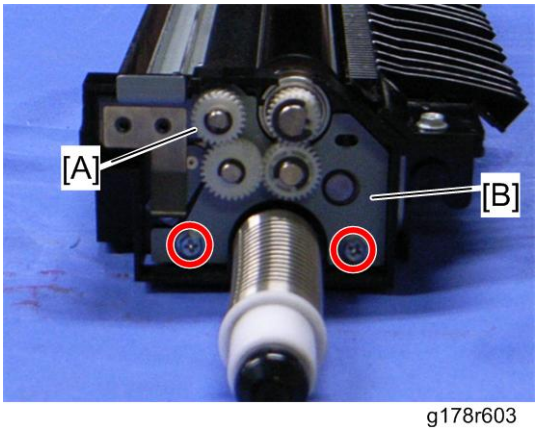

g178r603

3. Rear gear [A] (ℭ x 1)
4. Rear gear bracket [B] (x 2)

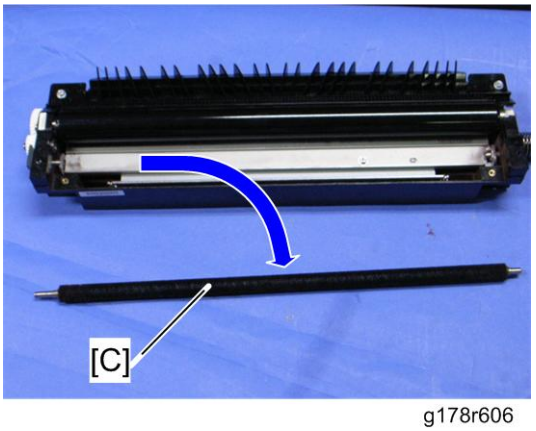

g178r606

5. PTR lubricant brush roller [C]

After installing a new PTR lubricant brush roller

Clear the PM counter for the PTR lubricant brush roller. See "PM Parts Screen Details" in the chapter "Preventive Maintenance".

PTR Discharge Plate

1. PTR unit (page 496)

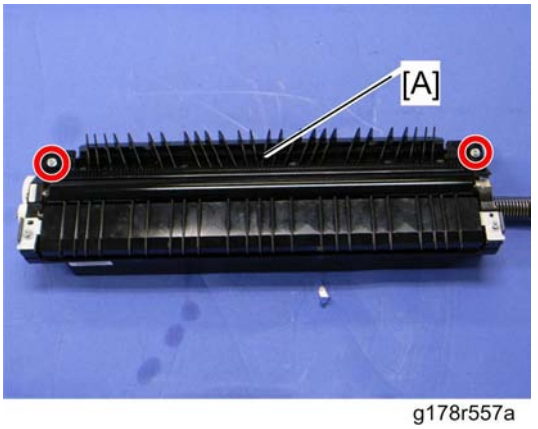

g178r557a

2. PTR discharge plate [A] (x 2)

After installing a new PTR discharge plate

Clear the PM counter for the PTR discharge plate. See "PM Parts Screen Details" in the chapter "Preventive Maintenance".

Paper Transfer Roller

1. PTR unit (page 496)
2. PTR lubricant bar (page 497)
3. PTR lubricant brush roller (page 498)

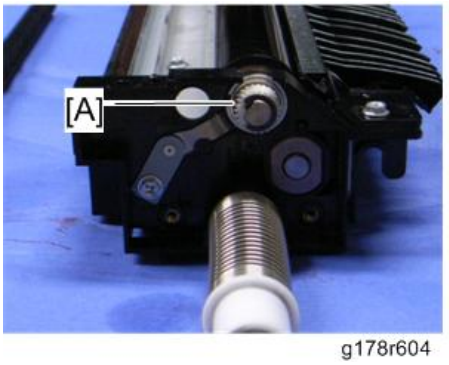

g178r604

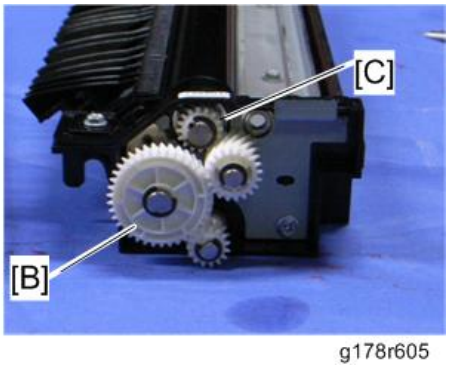

g178r605

4. Rear gear [A] (x 1)
5. Front gear [B] for PTR cleaning brush roller (x 1)
6. Front gear [C] (x 1)

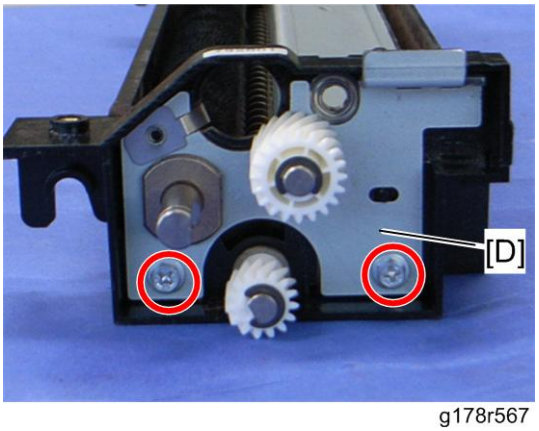

g178r567

7. Front gear bracket [D] (x 2)

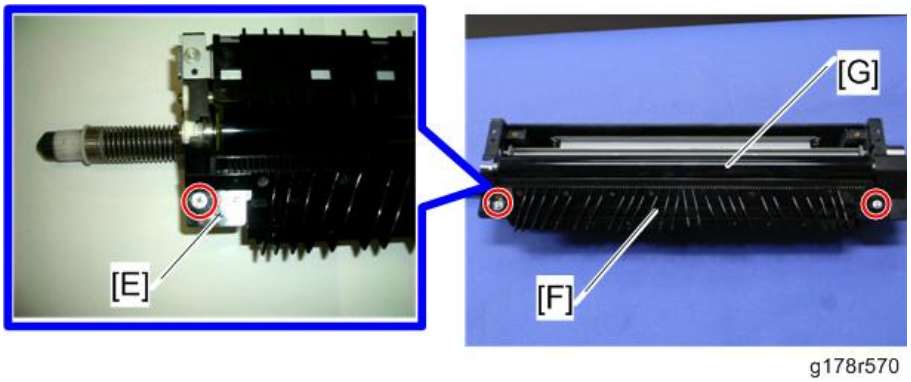

g178r570

8. Remove small cover [E] (x 1)
9. PTR Discharge plate [F] (x 2)
10. Paper transfer roller [G] (bushing x 2)

After installing a new paper transfer roller

Clear the PM counter for the paper transfer roller. See "PM Parts Screen Details" in the chapter "Preventive Maintenance".

PTR Cleaning Blade

1. PTR unit (page 496)
2. PTR lubricant bar (page 497))
3. PTR lubricant brush roller (page 498)
4. Paper transfer roller (page 500)

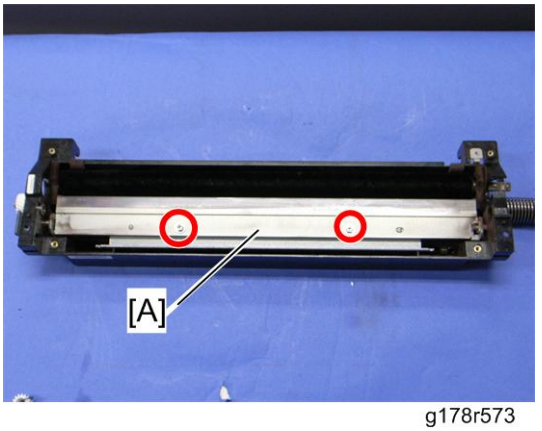

g178r573

5. PTR cleaning blade [A] (x 2)

After installing a new PTR cleaning blade

Clear the PM counter for the PTR cleaning blade. See "PM Parts Screen Details" in the chapter "Preventive Maintenance".

PTR Cleaning Brush Roller

1. PTR unit (page 496)
2. Paper transfer roller (page 500)
3. PTR cleaning blade (page 501)

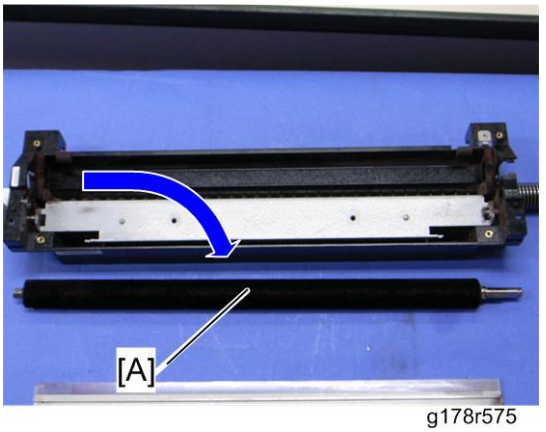

g178r575

4. PTR cleaning brush roller [A] (bushing x 2)

After installing a new PTR cleaning brush roller

Clear the PM counter for the PTR cleaning brush roller. See "PM Parts Screen Details" in the chapter "Preventive Maintenance".

Paper Feed and Transport

Tandem Tray (Tray 1)

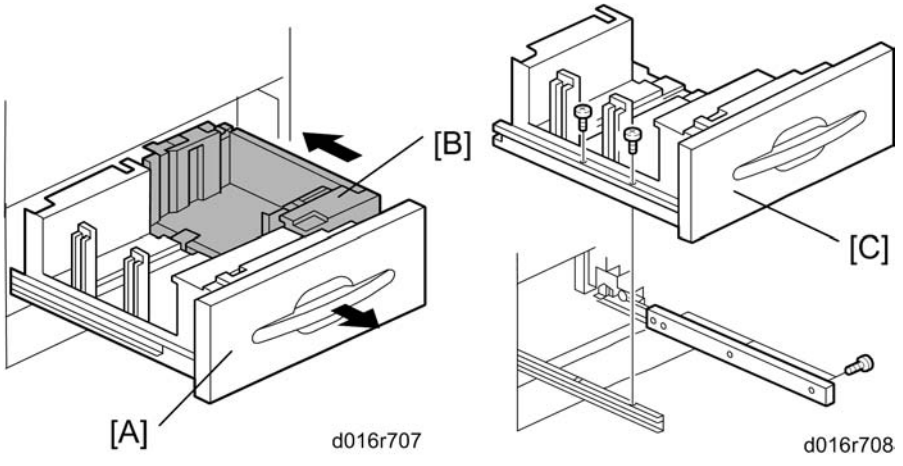

1. Open the tandem tray [A] so that the right tandem tray [B] fully separates from the left tray.
2. Push in the right tandem tray.
3. Left tandem tray [C] (x 5)

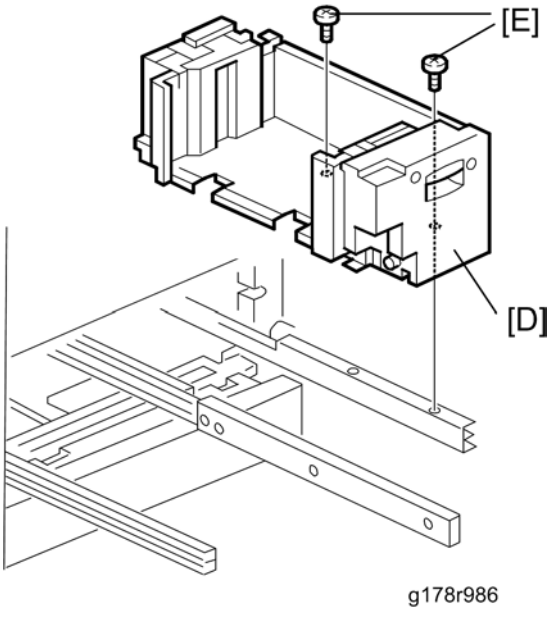

4. Right tandem tray [D] (x 2).

Note

- Use M4 x 4 screws [E] to secure the right tandem tray when reinstalling this tray. Screws longer than 4 mm will prevent the right tandem tray from sliding out and in smoothly.

When reinstalling the right tandem tray

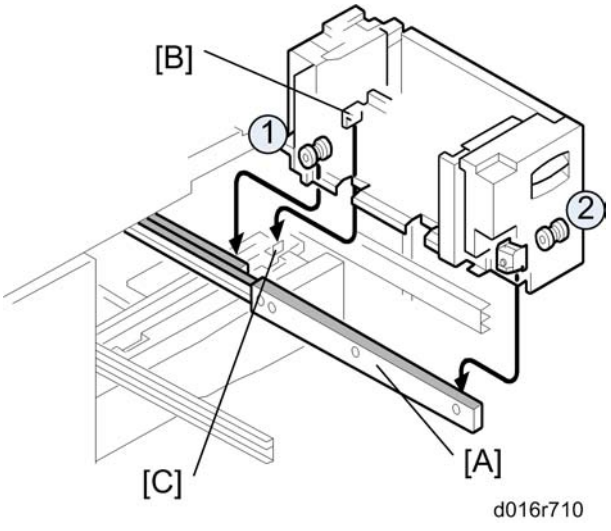

- When re-installing the right tandem tray, make sure that the wheels ①, ② ride on the slide rail [A].
- When re-installing the right tandem tray, make sure that the tandem tray stopper [B] is set behind the stopper [C] on the copier frame.

Universal Tray (Tray 2)

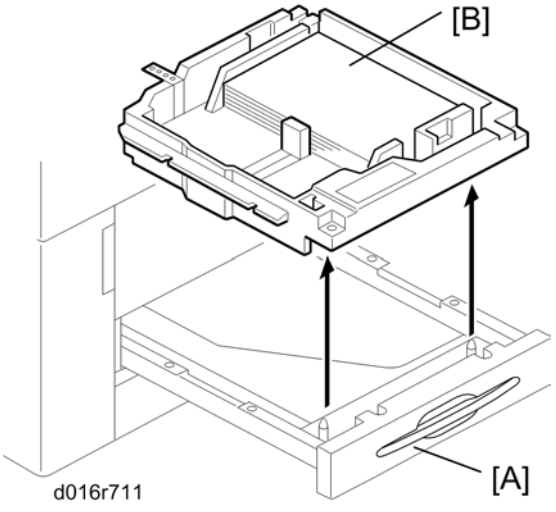

1. Pull open tray 2 or tray 3 [A].
2. Lift the tray [B] out of the drawer.

Paper Feed Unit 1 and 2

Note

- This procedure uses the 1st feed unit as an example. The procedures for the 2nd and 3rd trays are the same.

1. If the LCT is installed, disconnect it.
2. Open the right front door.
3. Push the lock lever.
4. Right cover (page 345)

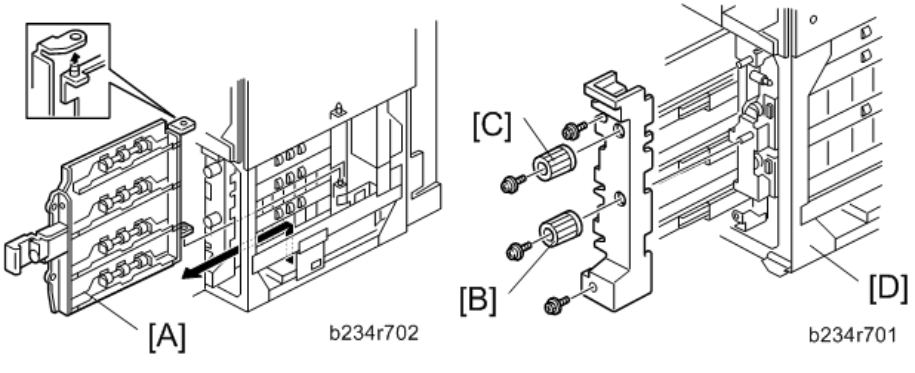

5. Lift the vertical transport guide [A] and remove it.
6. Knobs [B] [C] (x 1 each)
7. Paper tray unit inner cover [D] (x 2)

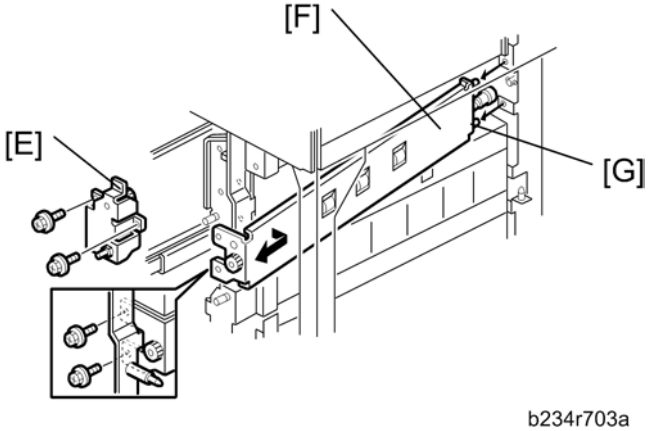

b234r703a

8. Upper gear bracket [E] (x 3)
9. Inner vertical transport guide [F] (x 2)

Note

- When re-installing the inner vertical transport guide, set the pin [G] of the inner vertical transport guide into the slot on the main body.

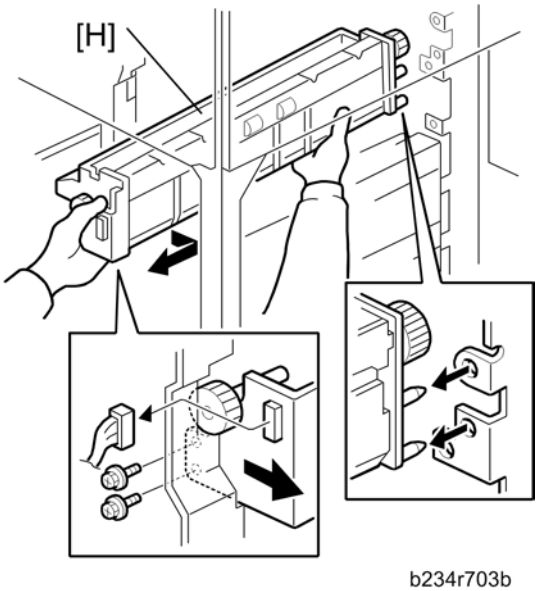

b234r703b

10. Paper feed unit [H] (x 2, x1)

Pick-up, Feed and Separation Rollers

1. Remove the target tray.

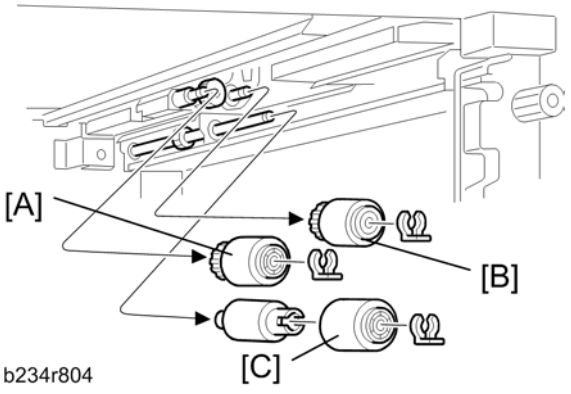

2. Pick-up roller [A] (x 1)
3. Feed roller [B] (x 1)
4. Separation roller [C] (x 1)

Important

- The feed rollers of the main machine and the LCT-MF are not interchangeable because they turn in different directions.
- After replacing a feed roller in the main machine, always make sure that it turns counterclockwise in the direction of paper feed.
- Do not touch the surface of the rollers with your bare hands.

5. Reset the PM count to zero for the new rollers after replacing the above rollers.

Paper Feed, Paper End, Tray Lift Sensor

1. Paper feed unit (page 506)

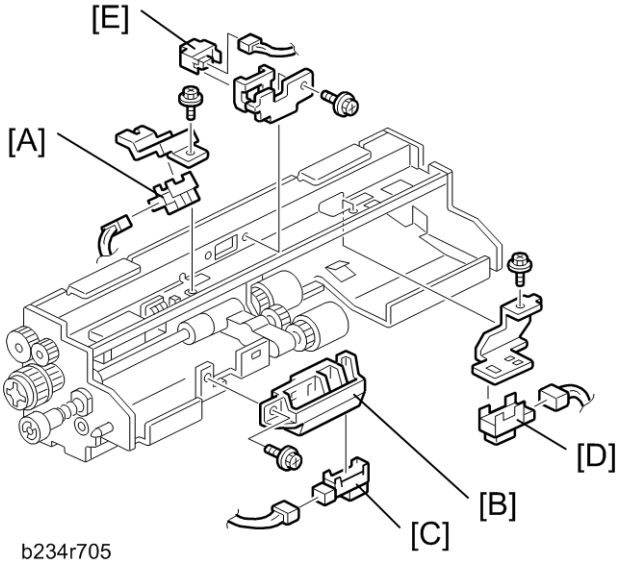

2. Tray lift sensor [A] (x 1, x 1).
3. Paper end sensor assembly [B] (x 1, x 1)
4. Paper end sensor [C]
5. Paper feed sensor [D] (x 1, x 1)
6. Vertical transport sensor [E] (x1, x1)

Rear Fence Return Sensor

1. Pull out the left tandem tray.

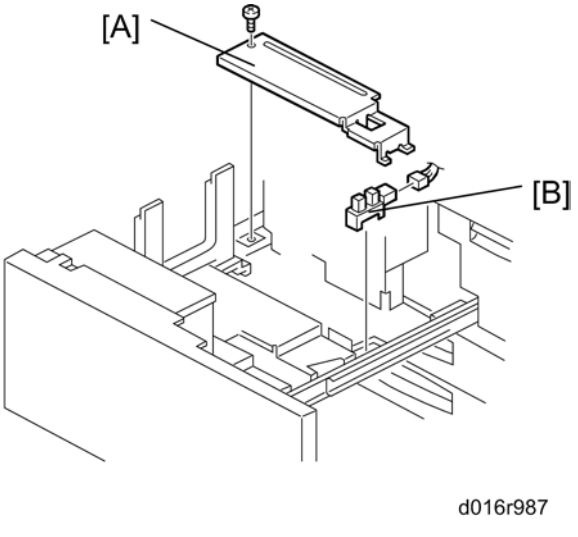

2. Rear bottom plate [A] (x 1).
3. Rear fence return sensor [B] (x 1).

Rear Fence HP Sensor

1. Pull out the left tandem tray.

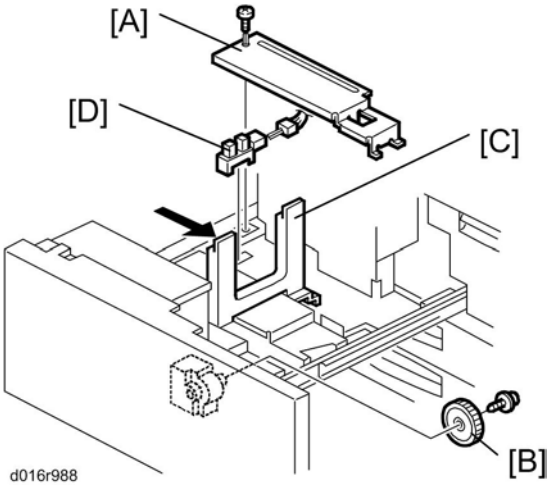

2. Rear bottom plate [A] (x 1).
3. Rear fence transport gear [B] (x 1).
4. Move the rear fence [C] to the right.
5. Rear fence HP sensor [D] (x 1).

Right Tray Paper Sensor

1. Right tandem tray (page 504 "Tandem Tray (Tray 1)")

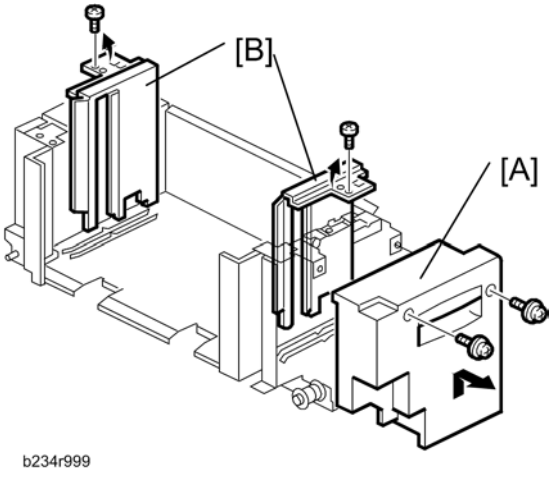

2. Tandem tray cover [A] (x 2).
3. Side fences [B] (x 1 each).

Note

- When re-installing the side fences, make sure that the position of the side fences is correct. [A4: Outer, LT: Inner]

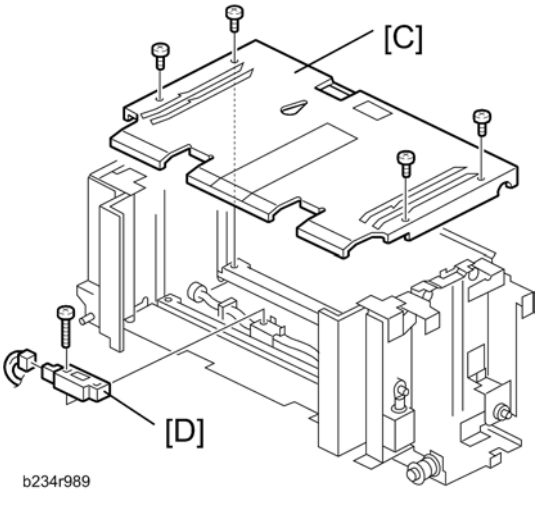

4. Bottom plate [C] (x 4).
5. Right tray paper sensor [D] (x 1, x 1).

Bottom Plate Lift Wire

Note

- Before replacing the rear bottom plate lift wire, remove the front bottom plate lift wire. The procedure for the two wires is the same.

1. Right tandem tray (☛page 504 "Tandem Tray (Tray 1)")
2. Tandem tray cover (☛page 510 "Right Tray Paper Sensor")

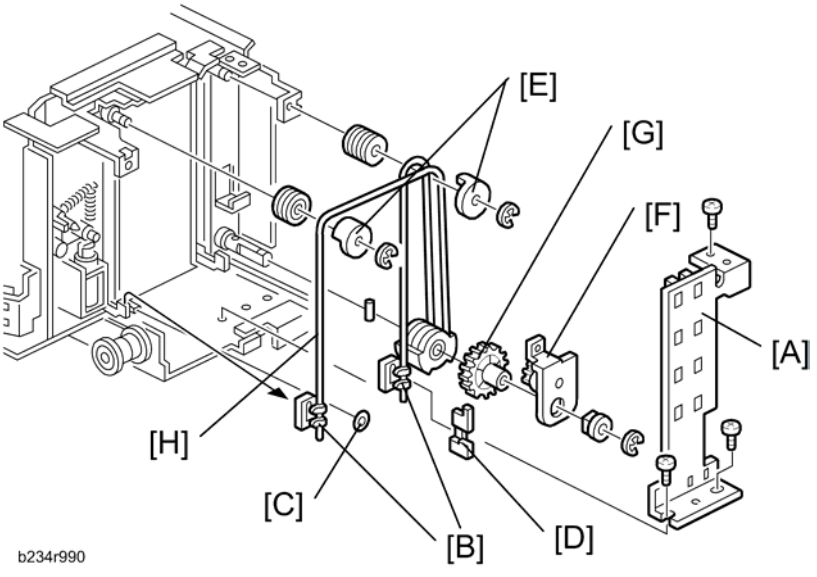

3. Sensor bracket [A] (x 3) (Front Only).
4. Slightly lift the front bottom plate and unhook the wire stoppers [B], remove stopper [C] and actuator [D].
5. Wire covers [E] (x 1 each).
6. Bracket [F] (x 1, x 1, bushing x 1) (Front Only).
7. Gear [G] (Front Only).
8. Bottom plate lift wire [H].

Re-installation

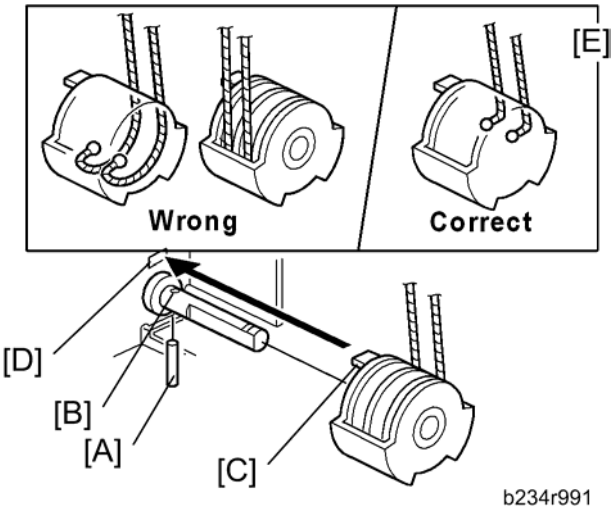

When re-installing the bottom plate lift wire:

1. Set the positioning pin [A] in the hole [B].
2. Set the projection [C] in the hole [D].
3. Position the wire as shown [E].
4. Do not cross the wires.

2nd Tray Paper Size Switch

1. Open the rear controller box (page 354 "Opening the rear controller box").
2. Open the IOB 2 bracket (page 588)

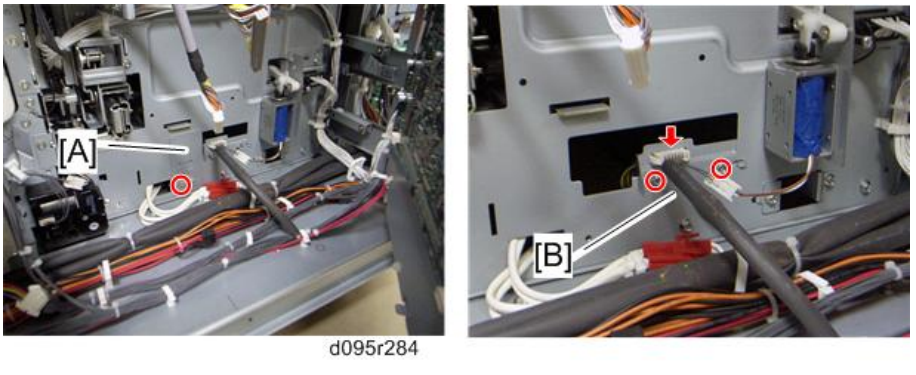

3. Bracket [A] (x 1)
4. 2nd tray paper size switch bracket [B] (x 2, x 1)

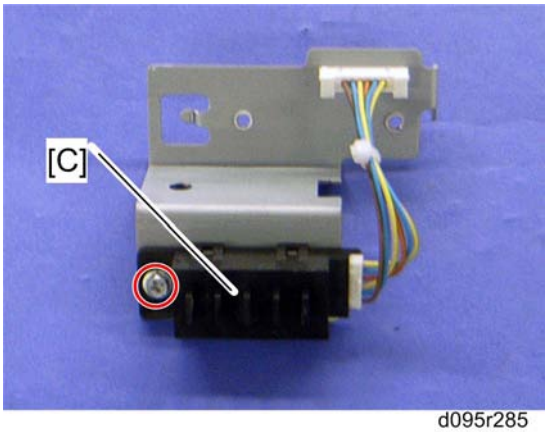

d095r285

5. 2nd tray paper size switch [C] (x 1)

Paper Feed and Grip Motors

1st Paper Feed and Grip Motor

1. Open the rear controller box (page 354 "Opening the rear controller box").
2. Open the IOB 1 bracket (page 587).

g178r235

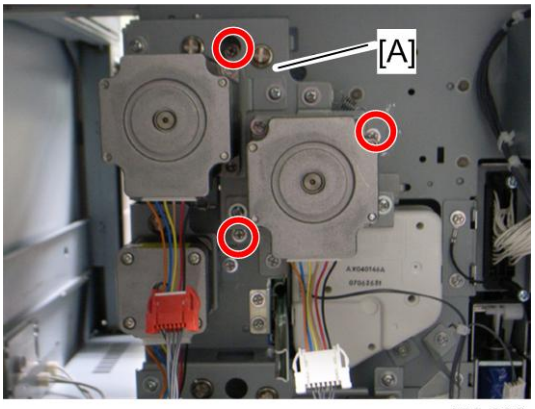

g178r228

3. 1st tray motor bracket [A] (x 3, x 2)

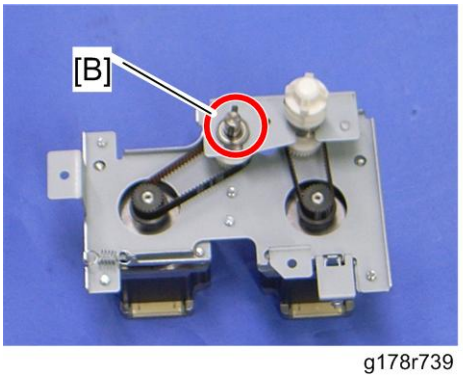

g178r739

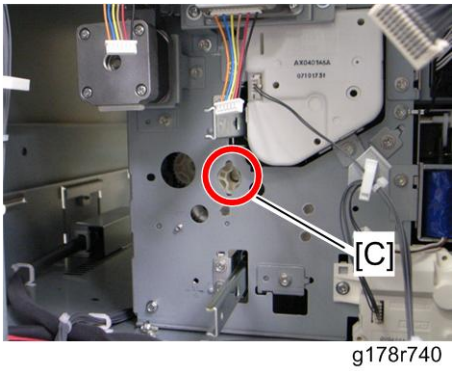

g178r740

Note

- If the 1st/2nd tray motor bracket cannot be removed, the coupling gear [B] of the 1st/2nd paper feed motor may have caught the cutout [C] on the frame. Align the coupling gear with the cutout by turning the 1st/2nd paper feed motor, and then remove it

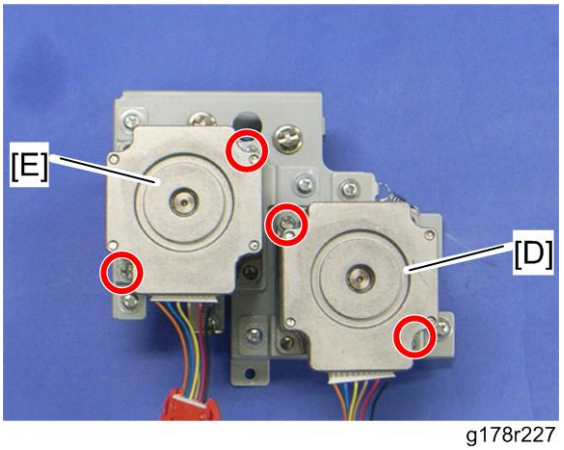

g178r227

4. 1st paper feed motor [D] (x 2, x 1)
5. 1st grip motor [E] (x 2, x 1)

2nd Paper Feed and Grip Motor

1. Open the rear controller box (page 354 "Opening the rear controller box").
2. Open the IOB 1 bracket (page 587).
3. Disconnect the harnesses of the 1st tray paper feed and grip motors, and the vertical relay motor.

Note

- These harnesses interrupt the removal of the 2nd tray motor bracket.

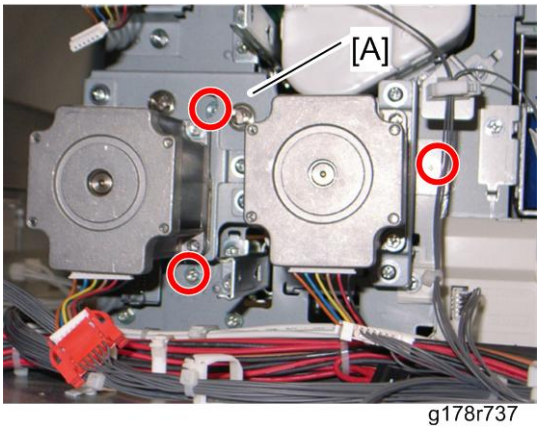

g178r737

4. 2nd tray motor bracket [A] (x 3, x 2)

Note

- If the 1st/2nd tray motor bracket cannot be removed, align the coupling gear with the cutout. For details, see "Note" below step 3 in the "1st Paper Feed and Grip Motor" procedure shown above.

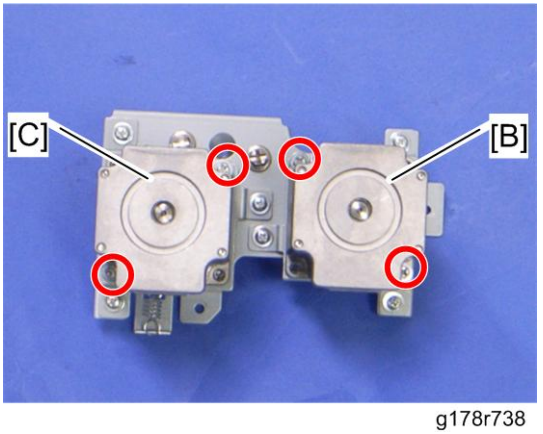

g178r738

5. 2nd paper feed motor [B] (x 2, x 1)
6. 2nd grip motor [C] (x 2, x 1)

Vertical Relay Motor

1. Open the rear controller box (page 354).
2. Open the IOB 1 bracket (page 587).
3. Disconnect the harness of the 1st grip motor.

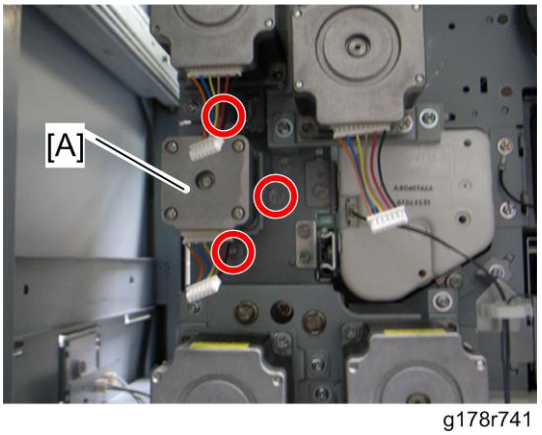

g178r741

4. Vertical relay motor bracket [A] (x 3, x 1)

Note

- If the vertical relay motor bracket cannot be removed, align the coupling gear with the cutout. For details, see "Note" below step 3 in the "1st Paper Feed and Grip Motor" procedure shown above.

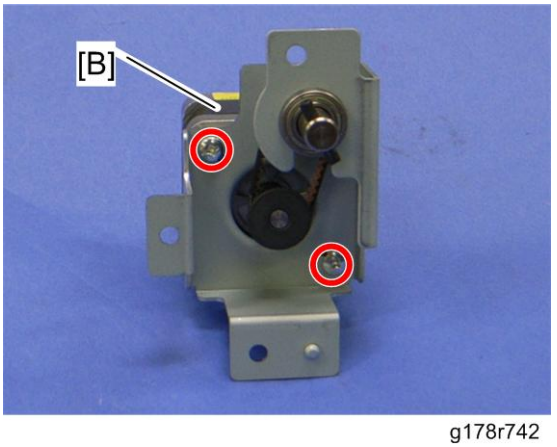

g178r742

5. Vertical relay motor [B] (x 2, timing belt)

Tray Lift Motors

1st tray Lift Motor

1. Open the rear controller box (☛page 354).
2. Open the IOB 1 bracket (☛page 587).
3. 1st tray motor bracket (☛page 514 "1st Paper Feed and Grip Motor")

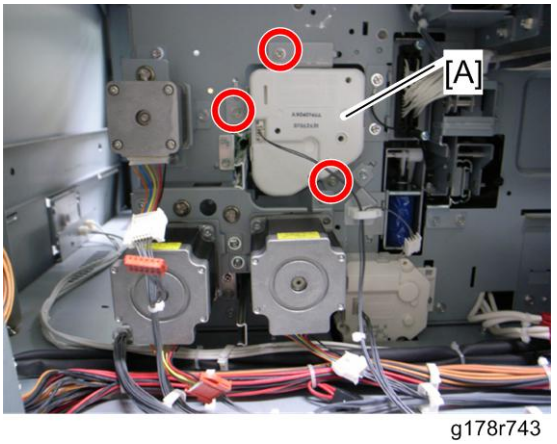

g178r743

4. 1st tray lift motor bracket [A] (x 2, x 1)

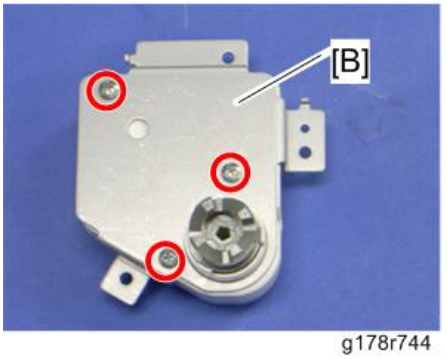

g178r744

g178r745

5. Bracket [B] (x 3)
6. 1st tray lift motor [C]

2nd tray Lift Motor

1. Open the rear controller box (☛page 354).
2. Open the IOB 1 bracket (☛page 587).
3. 2nd tray motor bracket (☛page 516 "2nd Paper Feed and Grip Motor")

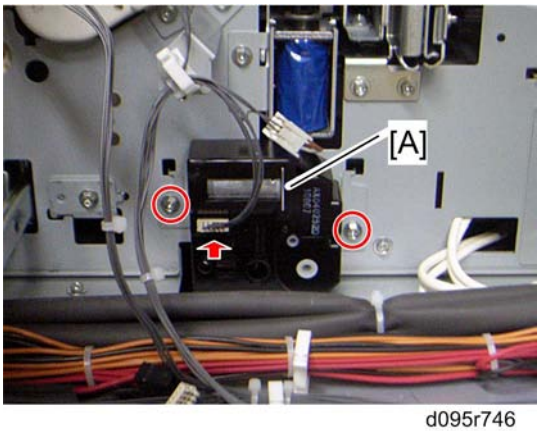

d095r746

4. 2nd tray lift motor [A] (x 2, x 1)

Fusing

⚠CAUTION

- To prevent electrical shock, switch off the main power switch and disconnect the power cord from the power source. Disconnect all other cables (USB, network, etc.) if they are connected. (☛ page 58 "Correct Procedure to Turn Off the Power ")
- The fusing unit becomes extremely hot during operation, so to prevent minor burns, switch the machine off and allow it to cool for at least 30 minutes before you remove the fusing unit.
- The fusing unit is approximately 29.2 kg (64.4 lb.) in weight, so two people are required to lift and move it. Handle it carefully when you remove it to avoid dropping it and causing damage or minor injuries.

Important

- **For some PM parts, automatic adjustment will be executed after clearing the PM counter (☛ page 321 "PM Parts Screen Details"). Open one of the front doors, and then close it after clearing the PM counter. The door open/close will execute the automatic adjustment for the replaced PM parts.**
- **Check the machine condition before installing a new PM part for the fusing unit or turning on a machine which has not been turned on for more than one week.**

Fusing Unit

⚠CAUTION

- Two people are required to lift or move the fusing unit.

1. Open the left and right front door.

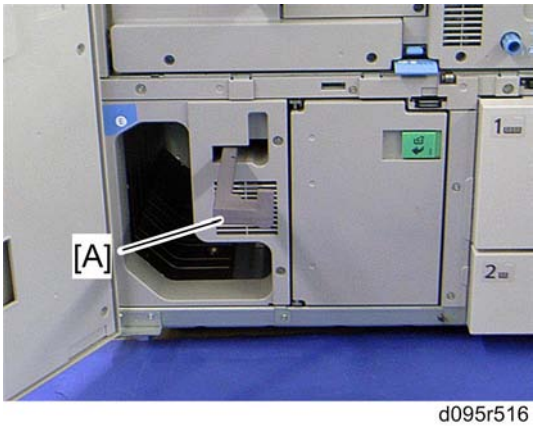

d095r516

2. Pull out the handle [A].

d095r081

3. Turn the lock lever [A] for the fusing unit drawer counterclockwise, and then pull the fusing unit drawer.
   - Remove the fusing knob [B] (x 1) before pulling out the fusing unit drawer if you are supposed to remove the fusing front cover after taking out the fusing unit.

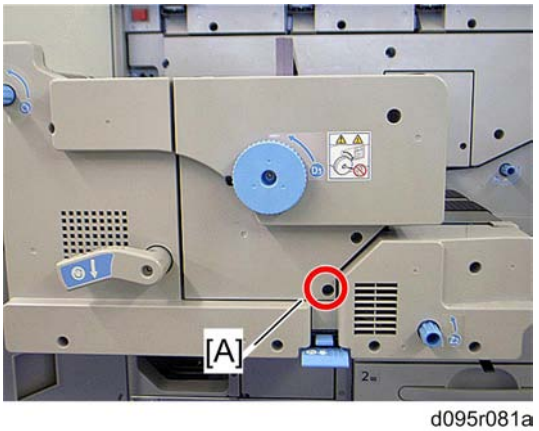

d095r081a

4. Remove the screw [A].

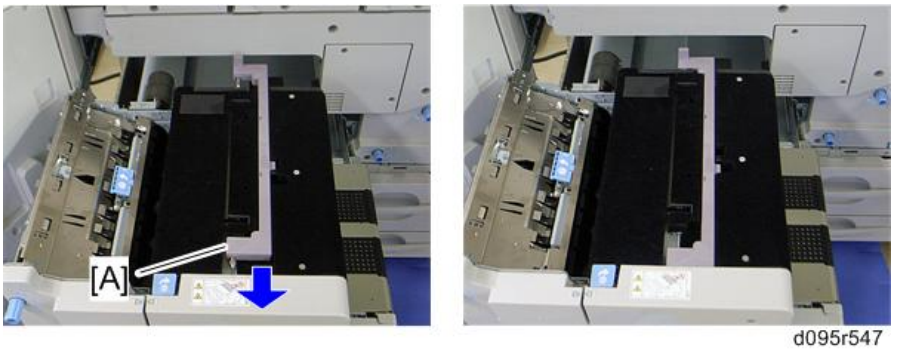

d095r547

5. Attach the handle [A] as shown above.

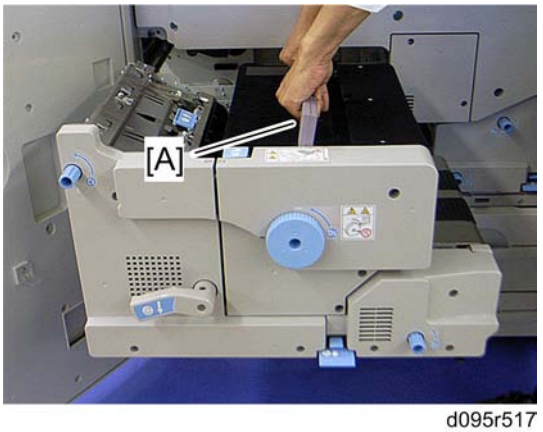

d095r517

6. Hold the handle [A], and then lift the fusing unit vertically.

⚠CAUTION

- The fusing unit weighs approximately 29.2 kg (64.4 lb.). Two people are required to lift and move it.
- Handle it carefully when you lift it and set it down.

7. Place the fusing unit on a suitable sheet of paper, and then remove the handle.

When reinstalling the fusing unit

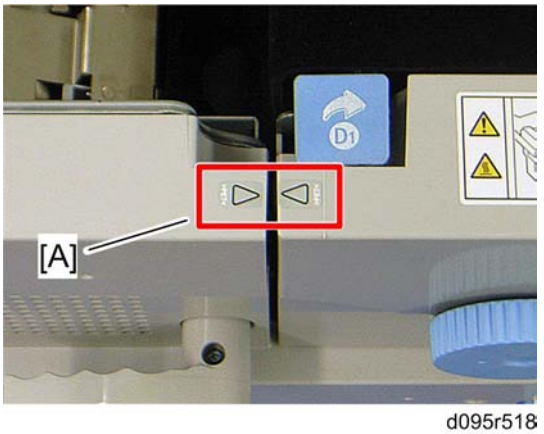

d095r518

Align the arrow decals [A] as shown above when reinstalling the fusing unit.

After installing a new fusing unit

Clear the PM counter for the fusing unit. See "PM Parts Screen Details" in the chapter "Preventive Maintenance".

Fusing Unit Drawer

Pulling out the fusing unit drawer

1. Open the left and right front door.

d095r081

2. Turn the lock lever [A] for the fusing unit drawer counterclockwise, and then pull the fusing unit drawer.

Removing the fusing unit drawer

⚠CAUTION

- The fusing unit drawer is too heavy for one person to lift or move safely. Two people are required to lift or move the fusing unit drawer.

1. Pull out the fusing unit drawer (see above).
2. Fusing unit (☛page 520)

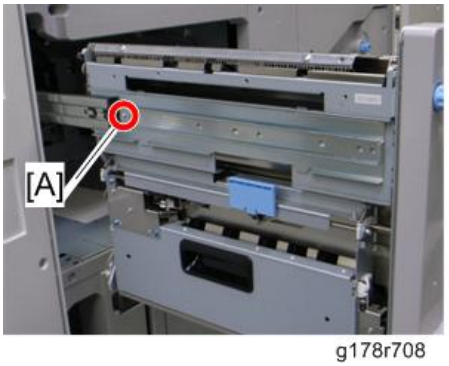

g178r708

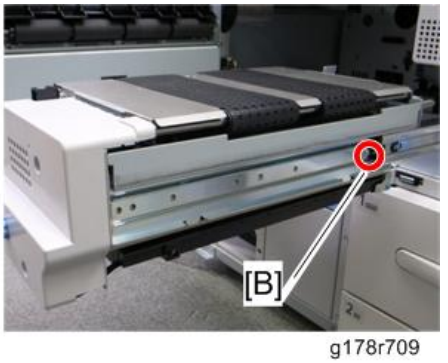

g178r709

3. Remove the screws at the left [A] and right [B] rails.

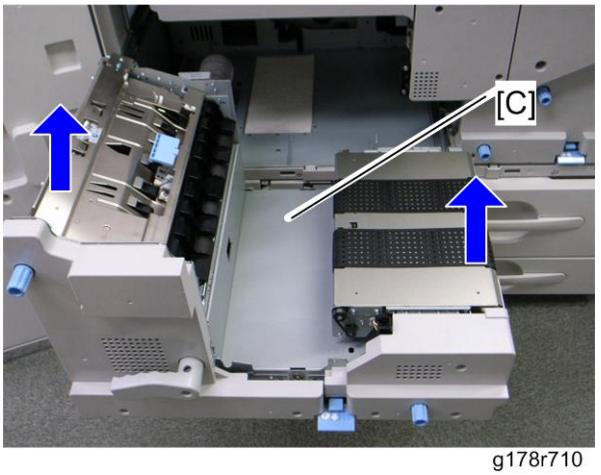

g178r710

4. Fusing unit drawer [C]

Fusing Front Cover

1. Fusing unit (☛page 520)

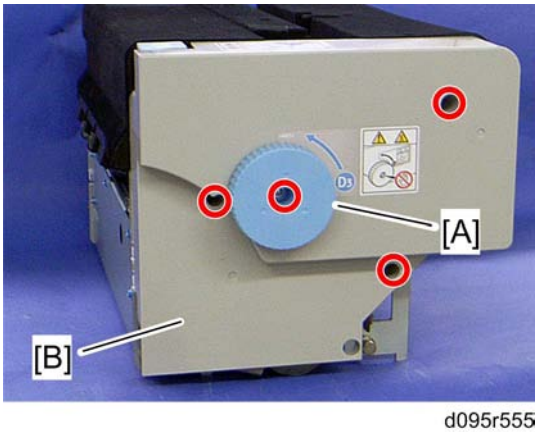

d095r555

2. Fusing knob [A] (x 1)
3. Fusing front cover [B] (x 3)

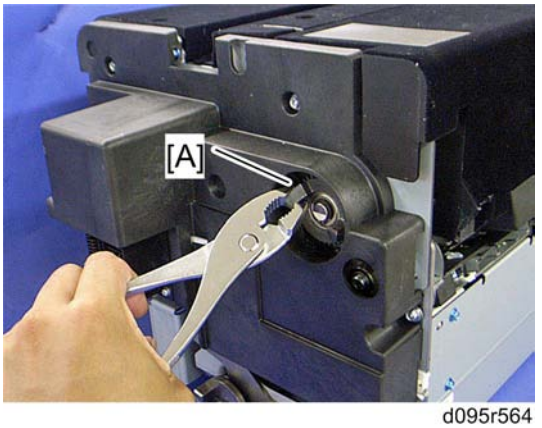

d095r564

Note

- If you cannot remove the fusing knob screw, hold the drive gear [A] with nippers and remove it.

Fusing Rear Cover

1. Fusing unit (page 520)

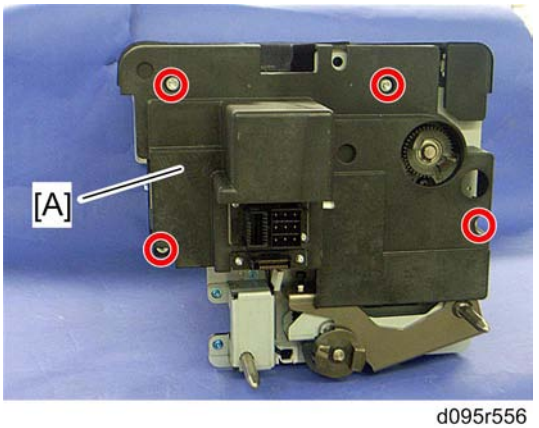

d095r556

2. Fusing rear cover [A] (x 4)

Fusing Upper Frame

1. Fusing unit (page 520
2. Fusing front cover (page 524)
3. Fusing rear cover (page 525)

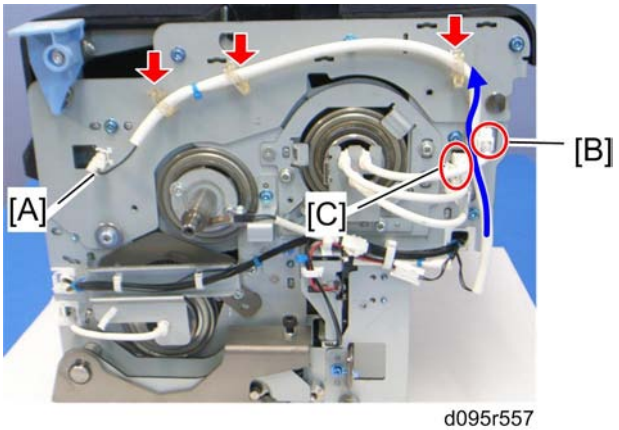

d095r557

4. Disconnect the connector [A] (x 3).
   - When rerouting the harness as shown above, route the harness between the connectors [B] and [C].

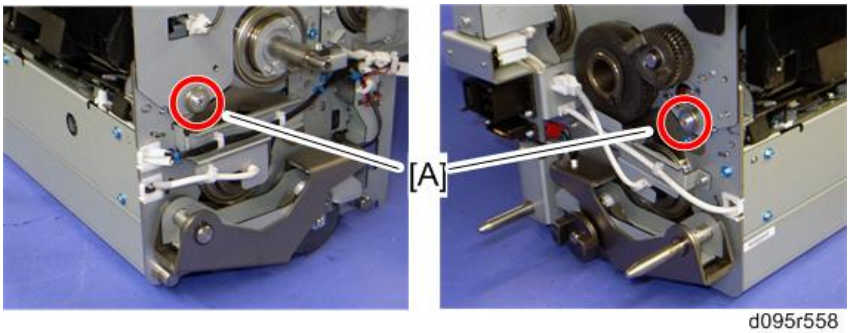

d095r558

5. Positioning pins [A] (x 2)

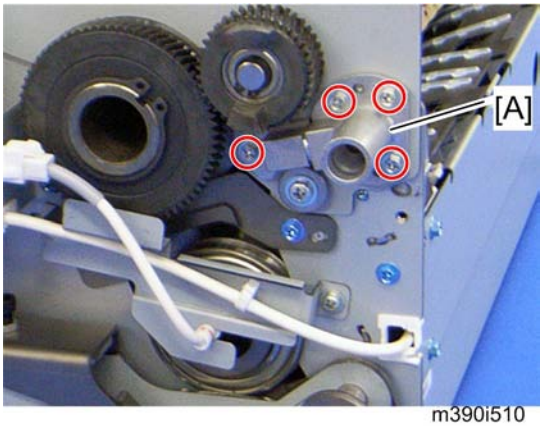

m390i510

6. Remove the pipe duct on the fusing rear frame if it has already been installed (x 4).
   - This pipe duct is for the optional air separator unit.

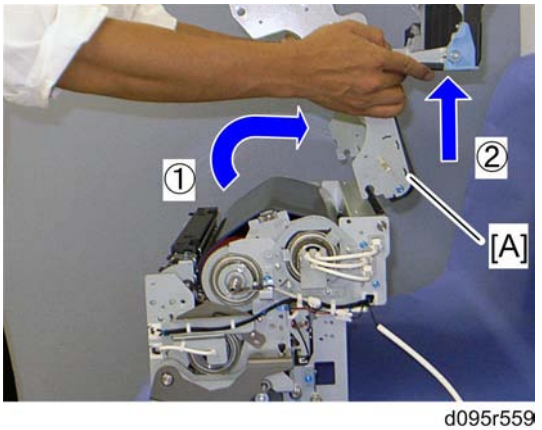

d095r559

7. Fusing upper frame [A]

Fusing Cleaning Unit

1. Fusing unit (☛page 520)

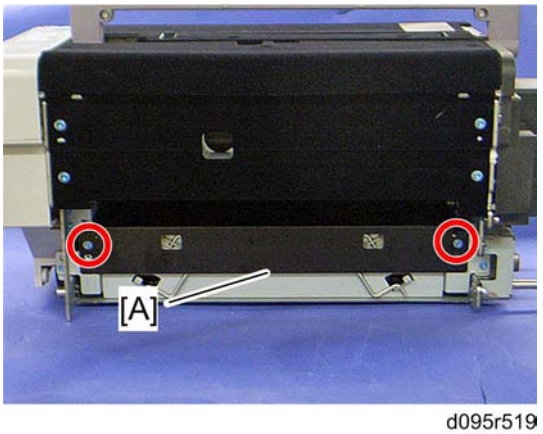

d095r519

2. Fusing entrance guide [A] (x 2)
   - The default position of the screw on the fusing entrance guide is the upper side. Use the upper screw holes when reinstalling the fusing entrance guide.

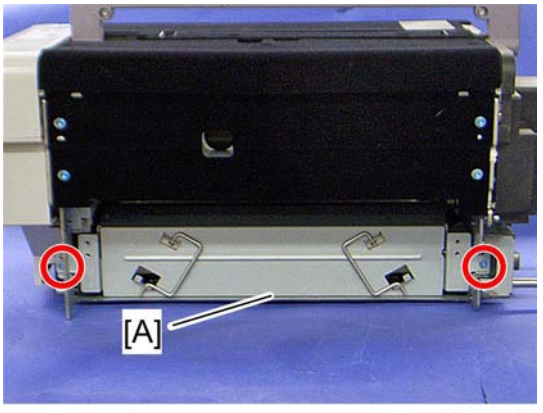

d095r520

3. Fusing cleaning unit [A] (x 2)

After installing a new fusing cleaning unit

Clear the PM counter "Web cleaning Unit" for the fusing cleaning unit. See "PM Parts Screen Details" in the chapter "Preventive Maintenance".

Cleaning Web

1. Fusing cleaning unit (page 527)

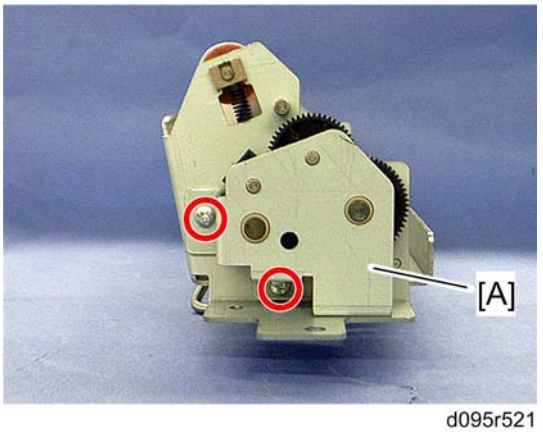

d095r521

2. Remove the bracket [A] (x 2).

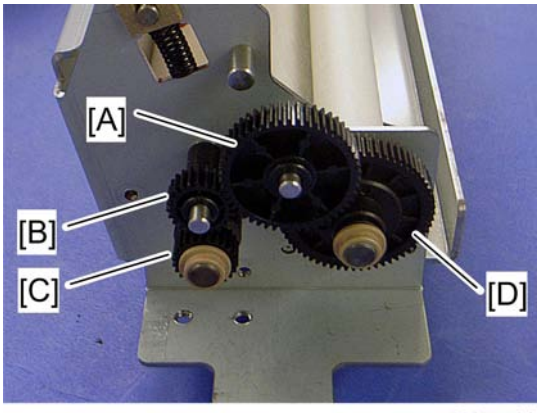

d095r522

3. Idle gear (Z20/ Z50) [A]
4. Idle gear (Z24) [B]
5. Cleaning fabric supply roller gear [C] (bushing x 2)
6. Take-up roller gear (Z60) [D] (bushing x 2)

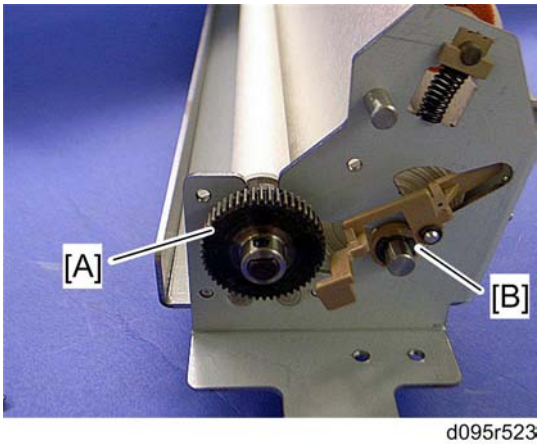

d095r523

7. Take-up roller gear (Z50) [A] (bushing x 1, x 1)
8. Bushing [B]

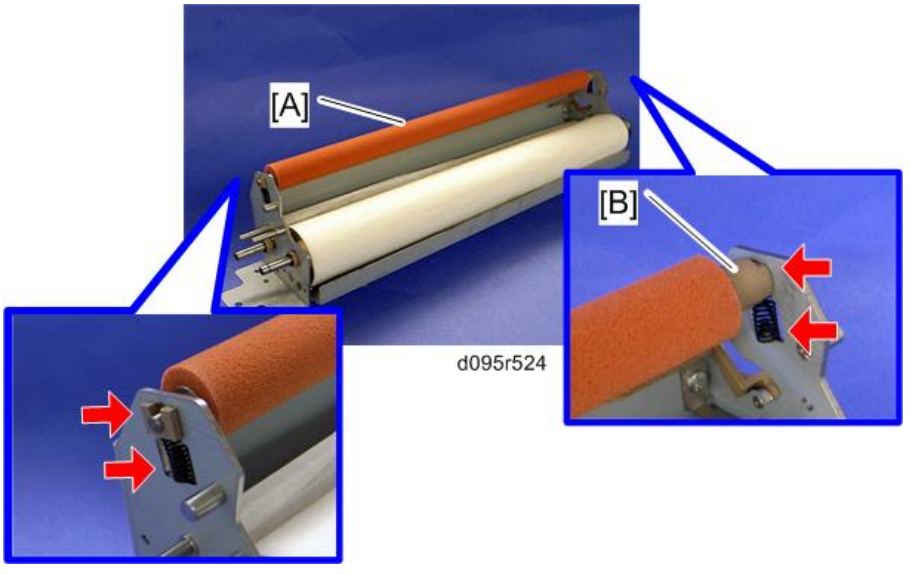

9. Fabric pressure roller [A] (bushing x 2, x spring x 2).

Note

- The bushing [B] contains a one-way clutch.

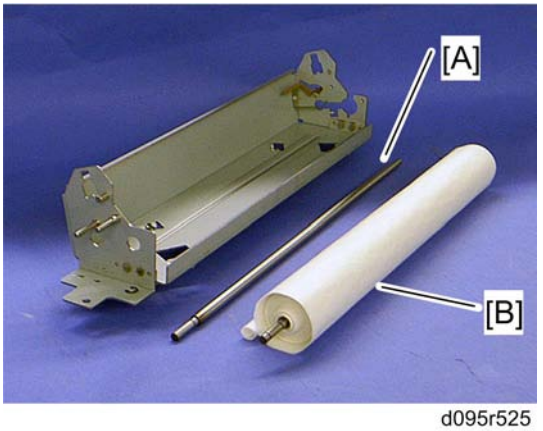

10. Cleaning fabric supply roller [A]
11. Take-up roller [B]

When reinstalling the cleaning web

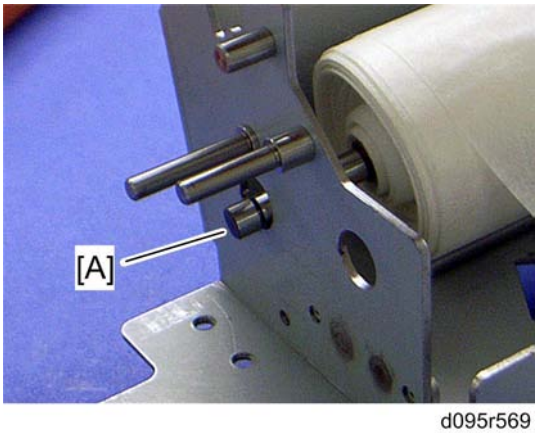

d095r569

1. Reinstall the shaft [A] at the rear side.

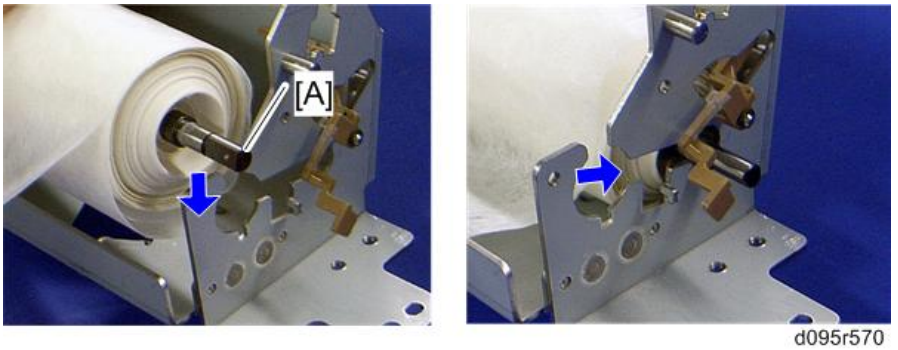

d095r570

2. Reinstall the shaft [A] at the front side.

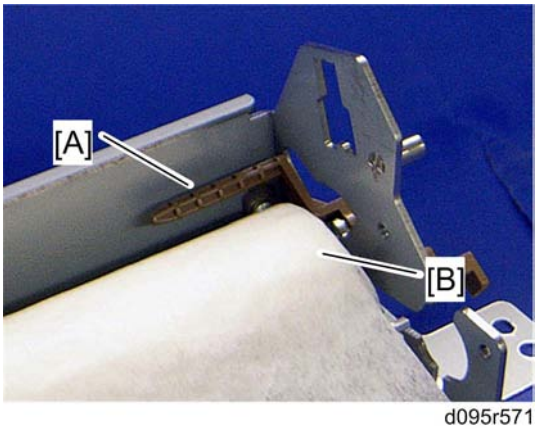

d095r571

Note

- Make sure that the feeler [A] is above the cleaning web [B].

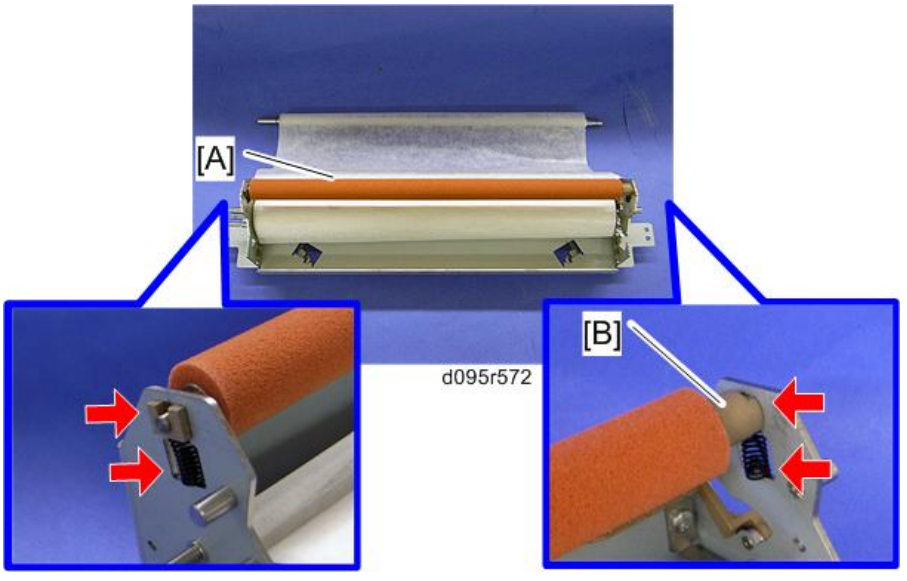

3. Reinstall the fabric pressure roller [A] (bushing x 2, x spring x 2).

Note

- The bushing [B] contains a one-way clutch.

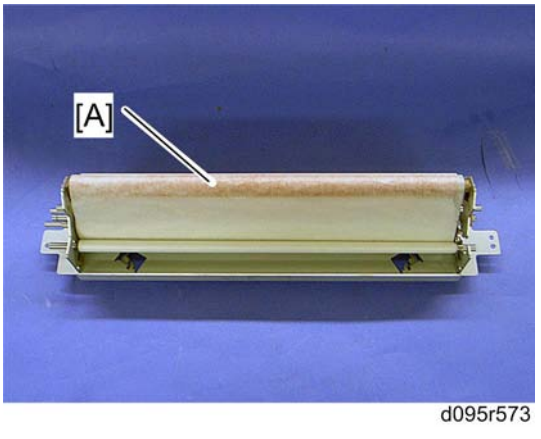

4. Reinstall the take-up roller [A].

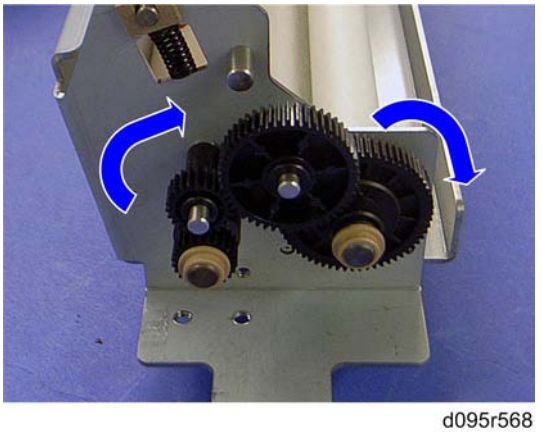

d095r568

5. Make sure that the gears rotate smoothly after reinstalling the cleaning web.

Fusing Lamps

Heating Roller Fusing Lamps

1. Fusing unit (page 520)
2. Fusing front cover (page 524)
3. Fusing rear cover (page 525)

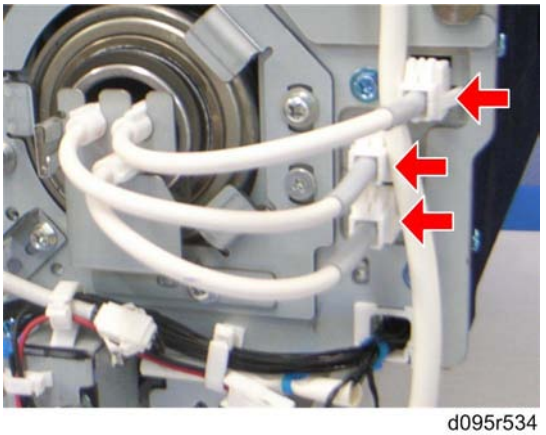

d095r534

4. Disconnect three connectors.

Note

- Connect three connectors as shown above when reinstalling the fusing lamps.

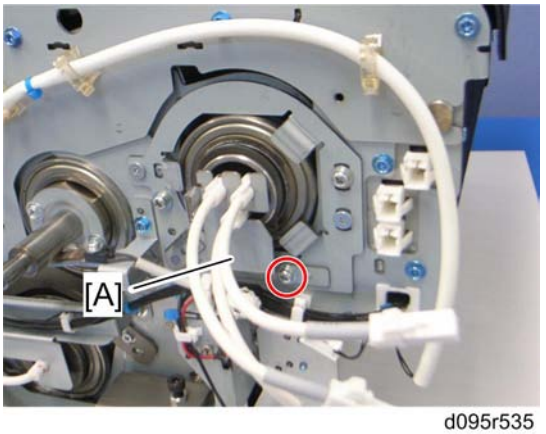

d095r535

5. Heating roller lamp front holder [A] (x 1)

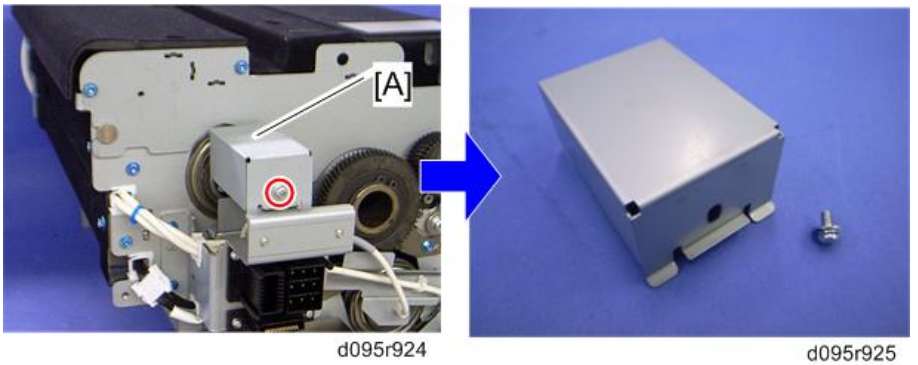

d095r924 d095r925

6. Lamp rear terminal cover [A] (x 1)

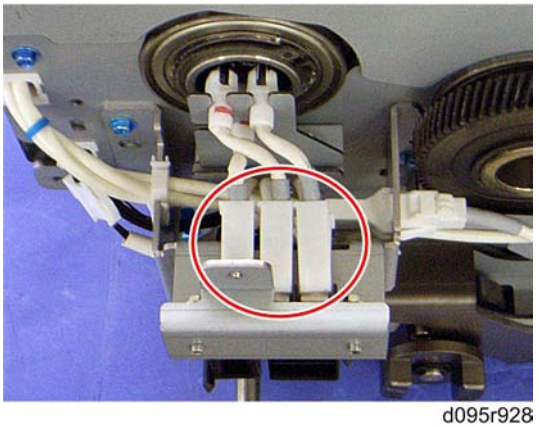

d095r928

7. Disconnect three connectors.

Note

- Connect three connectors as shown above when reinstalling the fusing lamps.

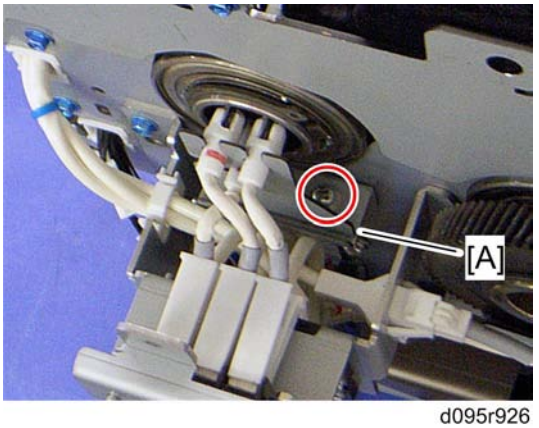

d095r926

8. Heating roller lamp rear holder [A] (x 1)

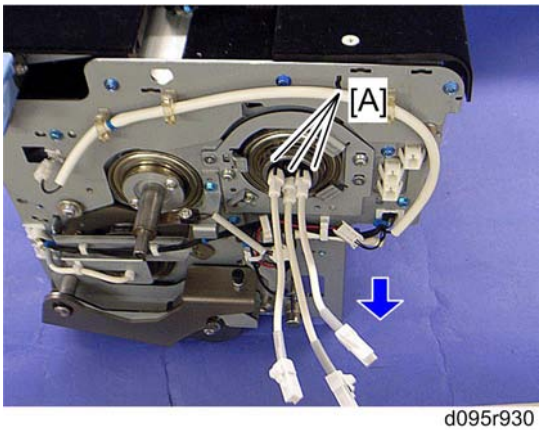

d095r930

9. Heating roller fusing lamps [A]

Note

- These three lamps are identical.
- The longer cord of the fusing lamp should be at the front side when reinstalling the fusing lamp.

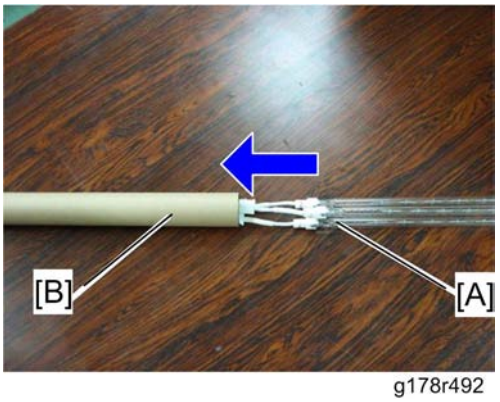

g178r492

10. Insert the fusing lamp(s) [A] into the heater guide [B].

Pressure Roller Fusing Lamp

1. Fusing unit (page 520)
2. Fusing front cover (page 524)
3. Fusing rear cover (page 525)

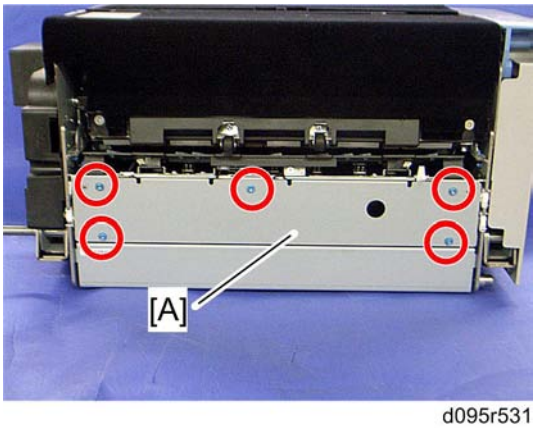

d095r531

4. Fusing unit left stay [A] (x 5)

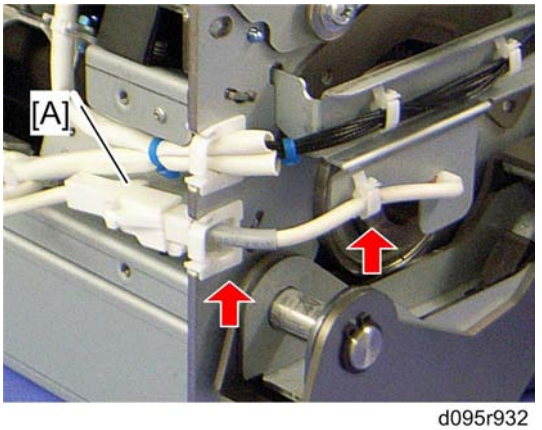

d095r932

5. Disconnect the connector [A] on the fusing unit front side (x 2).

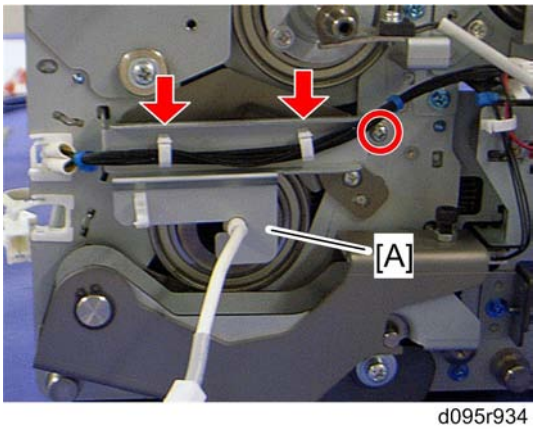

d095r934

6. Pressure roller lamp front holder [A] (x 1, x 2)

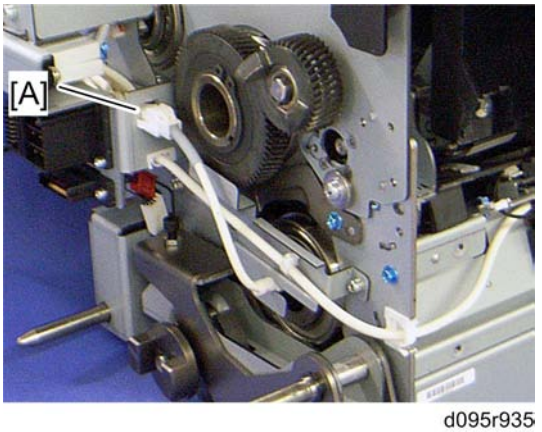

d095r935

7. Disconnect a connector [A].

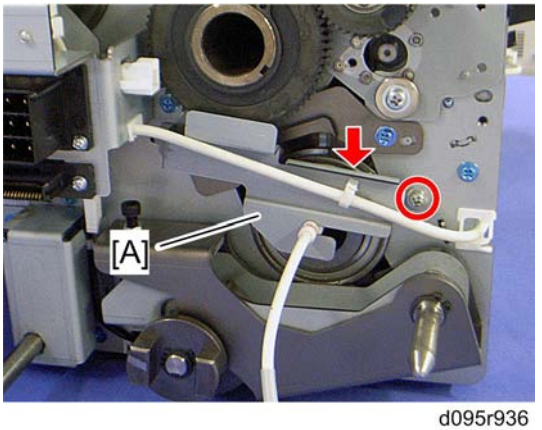

d095r936

8. Pressure roller lamp rear holder [A] (x 1, x 1)

Important:

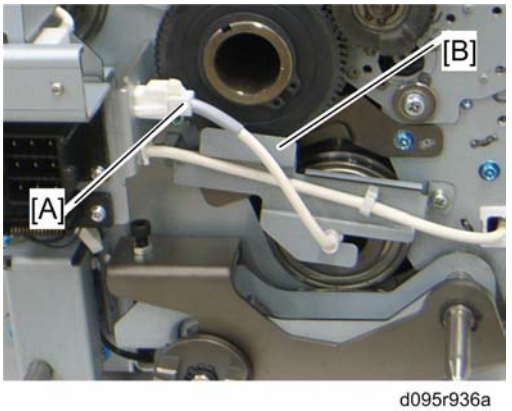

d095r936a

- When reinstalling the pressure roller lamp rear holder, set the cord [A] of the pressure roller lamp outside the holder [B].

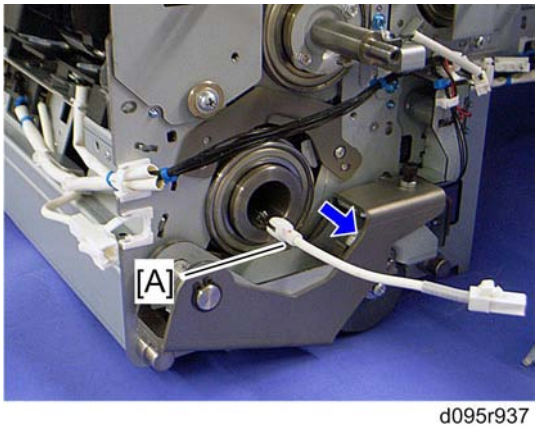

d095r937

9. Pressure roller fusing lamp [A]

When reinstalling the fusing lamps

When reinstalling the fusing lamps, using the heater guide will make the fusing lamp replacement much easier.

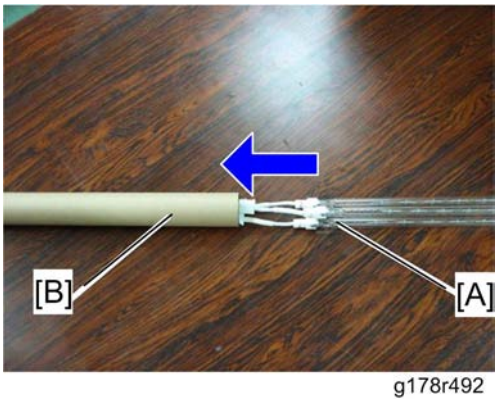

g178r492

1. Make sure that the fusing lamp(s) [A] are in the heater guide [B].

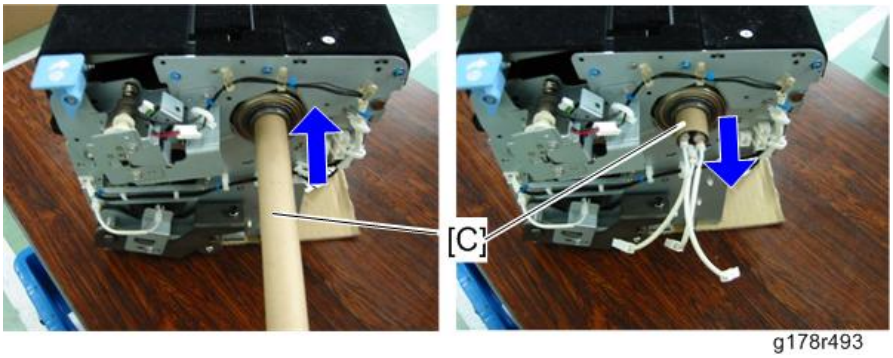

g178r493

2. Insert the heater guide [C] in the heating roller or pressure roller.
3. Pull out the heater guide only (keeping the fusing lamp(s) inside the heating or pressure roller).

Fusing Belt Stripper Plate

1. Fusing unit (☛page 520)
2. Fusing upper frame (☛page 525)

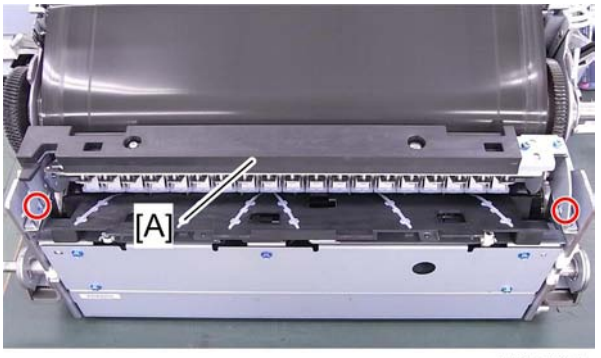

d095r537

3. Fusing belt stripper plate [A] (x 2)

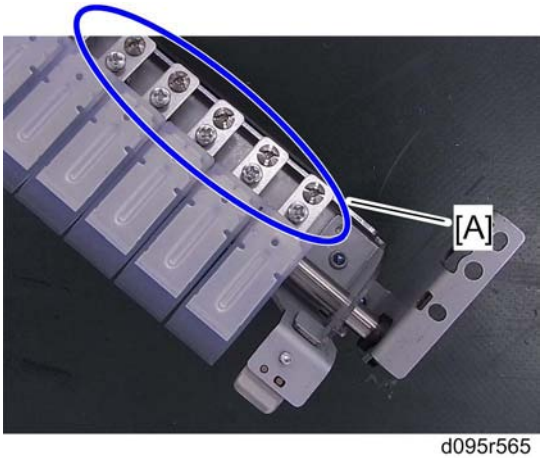

d095r565

Note

- Do not loosen the screws [A] of the stripper plate, because they are adjusted at the factory.

Parts in the Fusing Belt Assembly

Fusing Belt Assembly

1. Fusing unit (page 520)
2. Fusing upper frame (page 525)
3. Fusing belt stripper plate (page 539)
4. Heating roller fusing lamps (page 533)
5. Pressure roller fusing lamp (page 536)

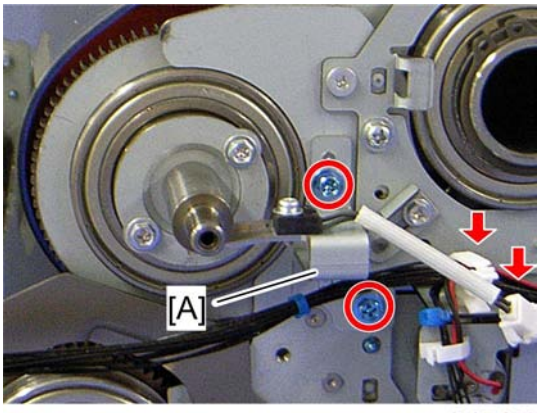

d095r938

6. Fusing roller thermistor bracket [A] (x 2, x 1, x 1)

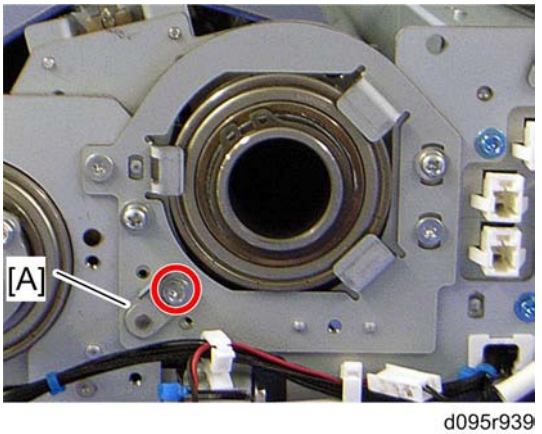

d095r939

7. Mark the location of the positioning bracket [A] so that you can reinstall it in the correct position.
8. Positioning bracket [A] (x 1)

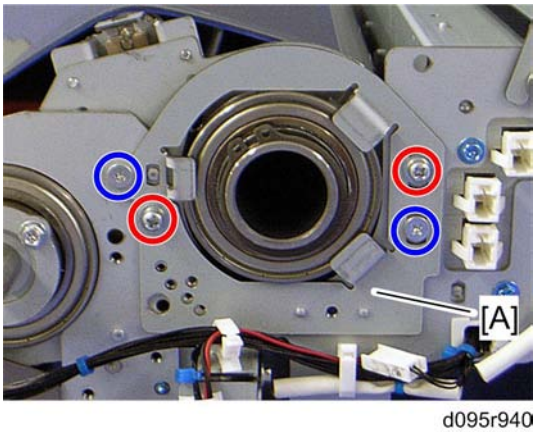

d095r940

9. Adjusting bracket [A] (x 4: step screw x 2(blue marks))

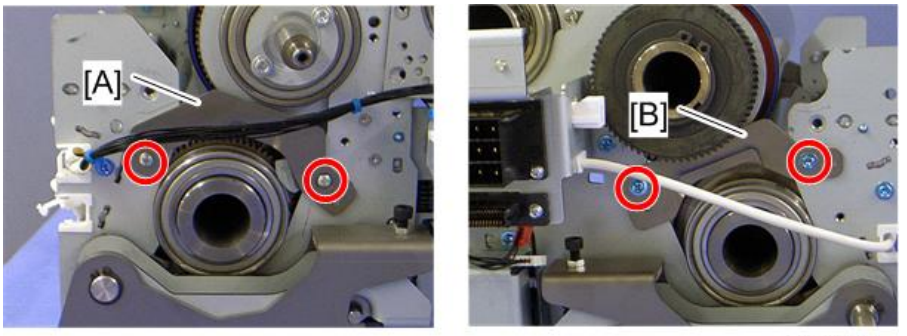

d095r941

10. Pressure roller positioning front bracket [A] (x 2)
11. Pressure roller positioning rear bracket [B] (x 2)

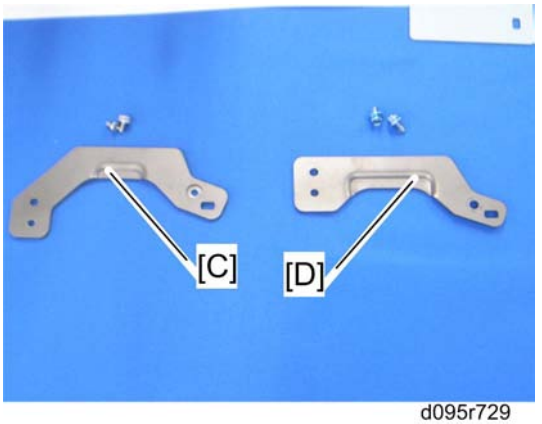

d095r729

- [C]: Pressure roller positioning front bracket
- [D]: Pressure roller positioning rear bracket

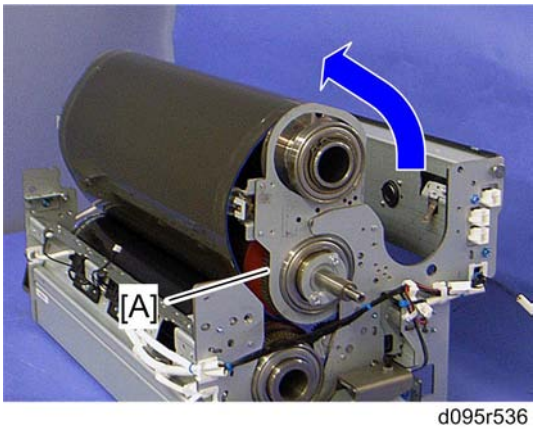

d095r536

12. Lift the fusing belt assembly [A].

Fusing Belt Tension Roller

1. Fusing unit (☛page 520)
2. Fusing belt assembly (☛page 540)

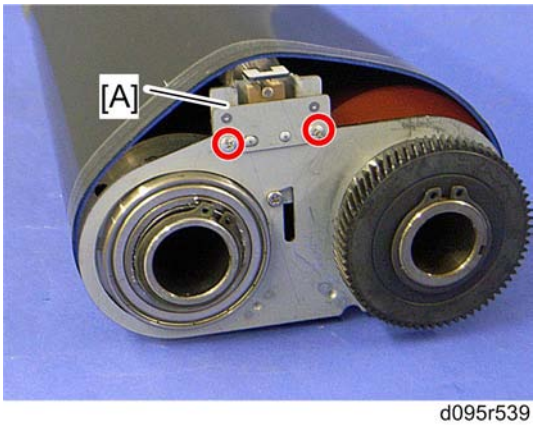

d095r539

3. Fusing belt tension roller positioning bracket [A] (x 2)

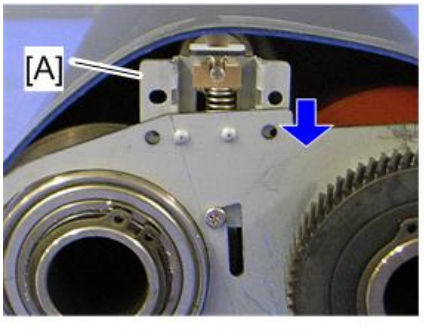

d095r540

4. Push down the bracket [A].

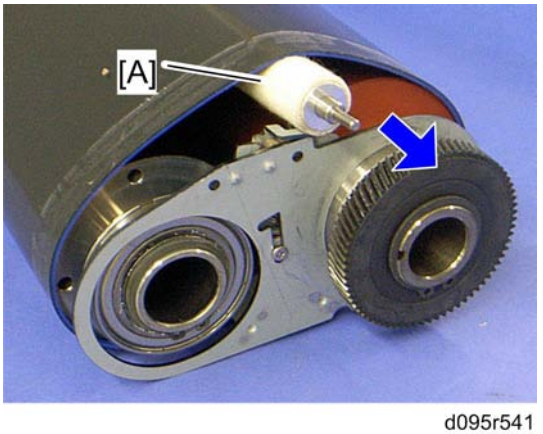

d095r541

5. Fusing belt tension roller [A]

Hot Roller Gear

1. Fusing belt assembly (☛page 540)

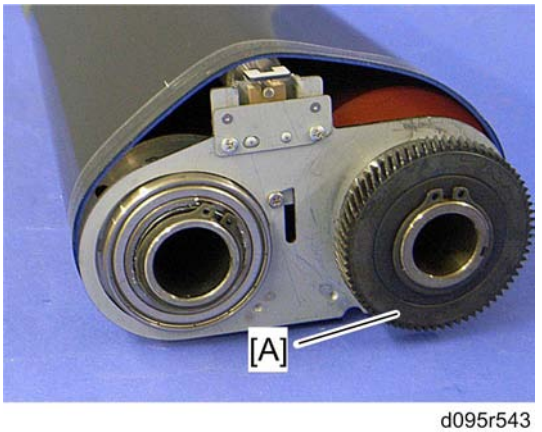

d095r543

2. Hot roller gear [A] (snap ring x 1)

Fusing Belt

1. Fusing belt assembly (☛page 540)
2. Fusing belt tension roller (☛page 543)

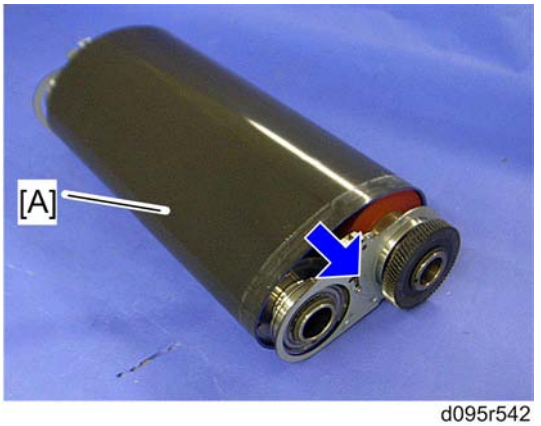

d095r542

3. Fusing belt [A]

Cleaning Requirement

Clean the heating roller and hot roller with alcohol when replacing the fusing belt.

After installing a new fusing belt

- Clear the PM counter for the fusing belt. See "PM Parts Screen Details" in the chapter "Preventive Maintenance".

Hot Roller and Heating Roller

1. Fusing belt assembly (☛page 540)
2. Fusing belt (☛page 544)
3. Hot roller gear (☛page 544)

d095r544

4. Roller positioning bracket [A] (x 1)

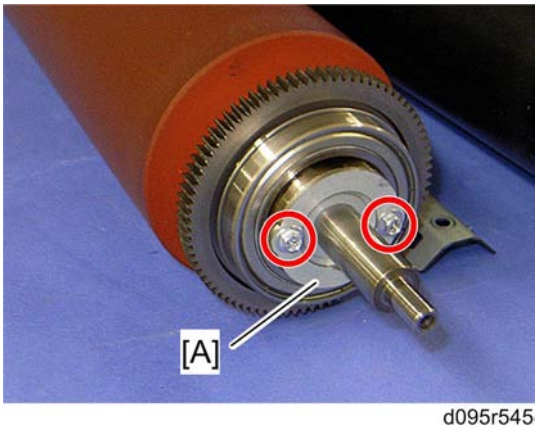

d095r545

5. Fusing knob shaft [A] on the hot roller (x 2)

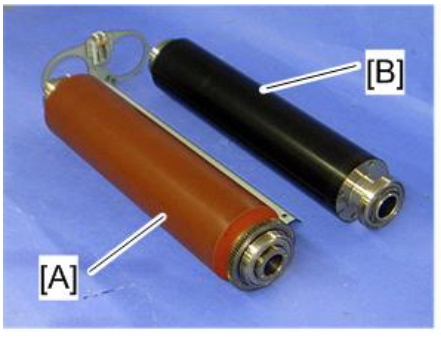

d095r546

6. Hot roller [A] and heating roller [B]

When reinstalling the heating roller

Each bearing of the heating roller and roller positioning plate has a mark ("F" or "R"). Assemble the heating roller and roller positioning plates so that the mark on the bearing matches the mark on the roller positioning plate.

When reinstalling the hot roller

Make sure that the longer exposed part of the shaft [C] is at the front when reassembling the fusing belt assembly.

After installing a new hot roller or heating roller

- Clear the PM counter for the hot roller. See "PM Parts Screen Details" in the chapter "Preventive Maintenance".

Fusing Belt Tension Roller Bushing

1. Roller positioning brackets (☛page 545)

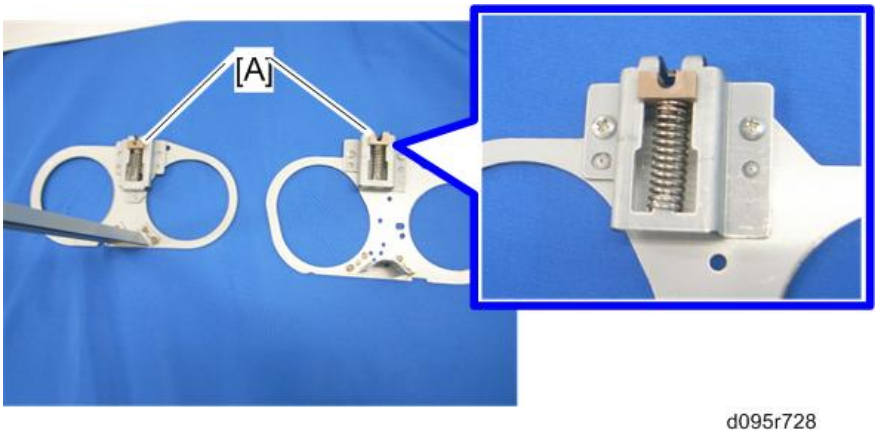

2. Fusing belt tension roller bushings [A] (spring x 1 each)

After installing a new fusing belt tension roller bushing

- Clear the PM counter for the fusing belt tension roller bushing. See "PM Parts Screen Details" in the chapter "Preventive Maintenance".

Heating Roller Thermistor

1. Fusing unit (☛page 520)

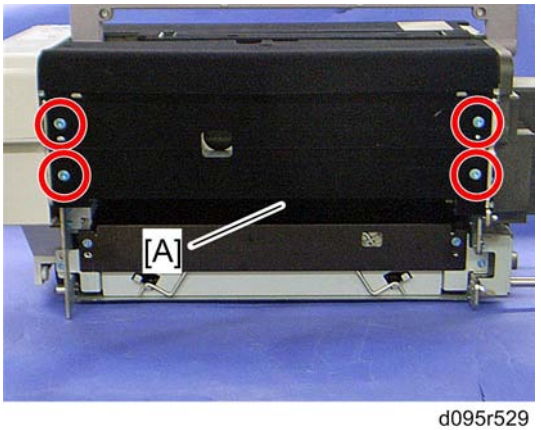

d095r529

2. Fusing unit right cover [A] (x 4)

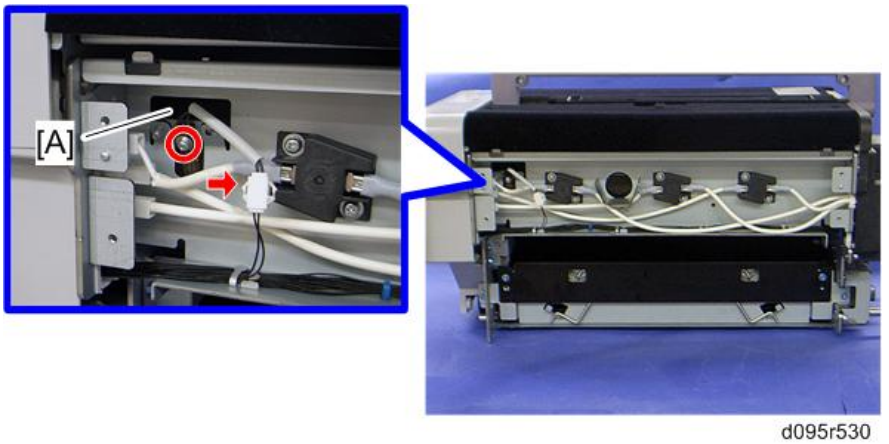

d095r530

3. Heating roller thermistor [A] (x 1, x 1)

After installing a new heating roller thermistor

Clear the PM counter for the heating roller thermistor. See "PM Parts Screen Details" in the chapter "Preventive Maintenance".

Heating Roller Thermostat

1. Fusing unit (page 520)
2. Fusing unit right cover (page 546 "Heating Roller Thermistor")

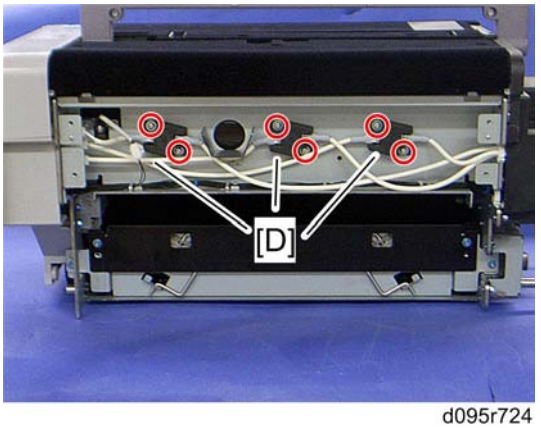

d095r724

3. Thermostat outer covers [D] (x 2 each)

Note

- The removal procedure for each thermostat is identical.

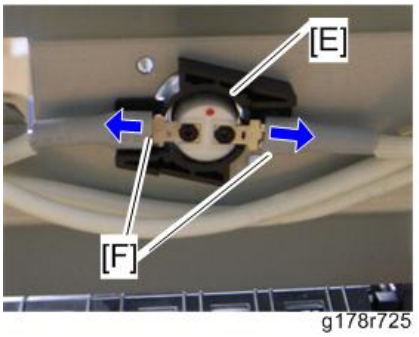

g178r725

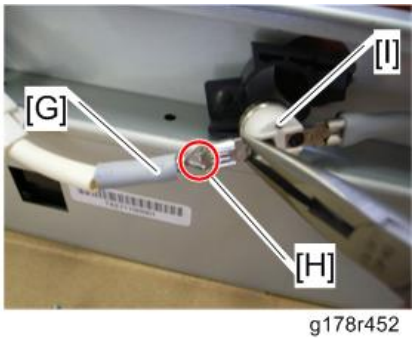

g178r452

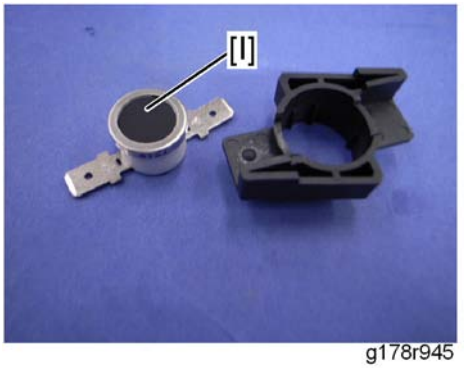

g178r945

4. Thermostat inner cover [E]
5. Slide the terminal covers [F].
6. Disconnect the cable [G], while releasing the lock tab [H] and the cable at the other side.
7. Heating roller thermostat [I]

Note

- These three thermostats are identical.

Pressure Roller Stripper Pawl Unit

1. Fusing upper frame (page 525)

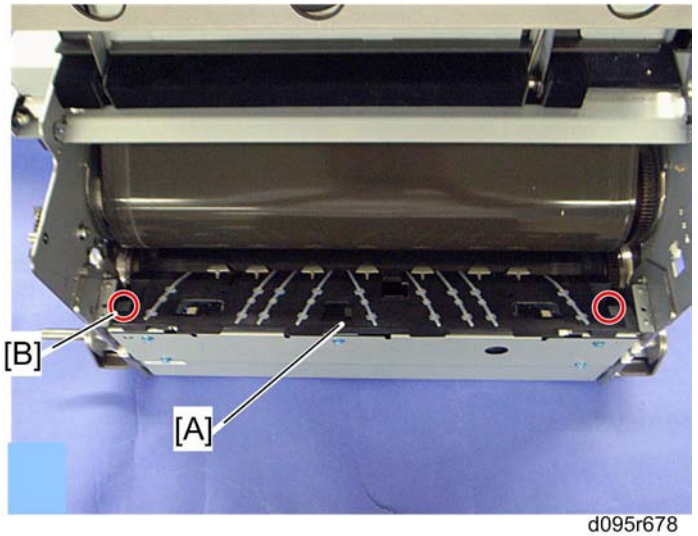

d095r678

2. Fusing exit guide [A] (x 2)
   - [B]: Step screw

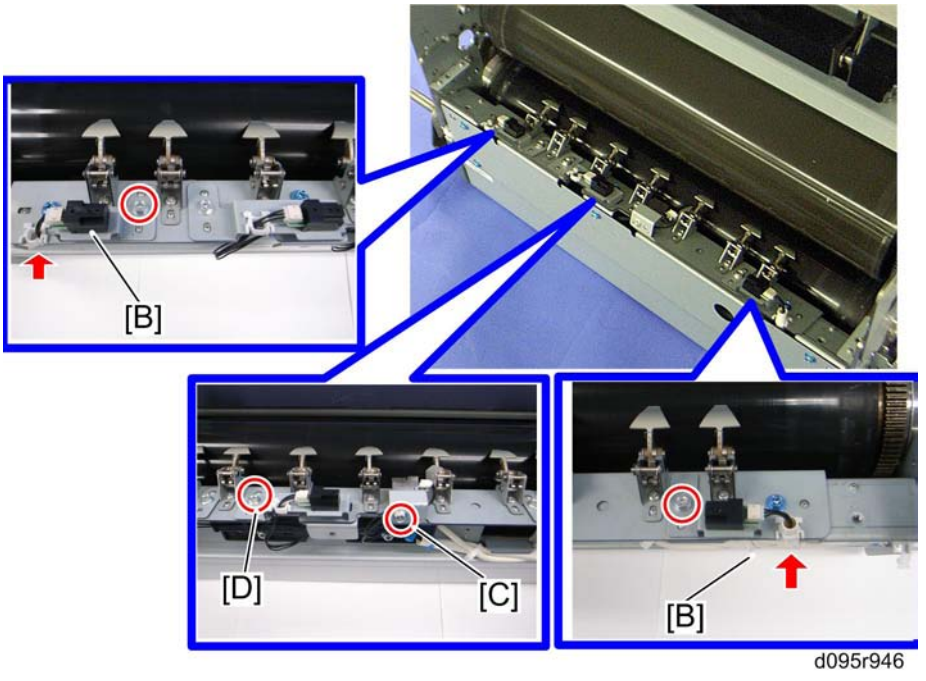

3. Two fusing exit sensor brackets [B] (each x 1, x 1)
4. Accordion jam sensor bracket [C] (x 1)
5. Exit sensor bracket [D] (x 1)

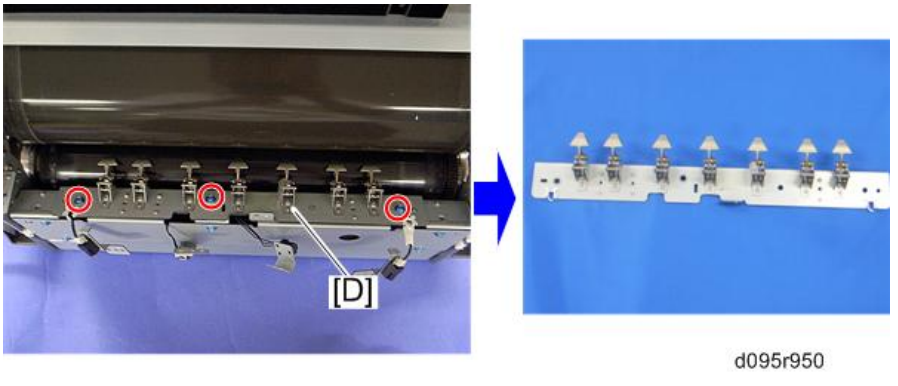

6. Pressure roller stripper pawl unit [D] (x 2)

After installing a new pressure roller stripper pawl unit

Clear the PM counter "Separation Claw" for the pressure roller stripper pawl unit. See "PM Parts Screen Details" in the chapter "Preventive Maintenance".

Accordion Jam Sensor

1. Fusing unit (page 520)
2. Fusing upper frame (page 525)
3. Fusing belt stripper plate (page 539)

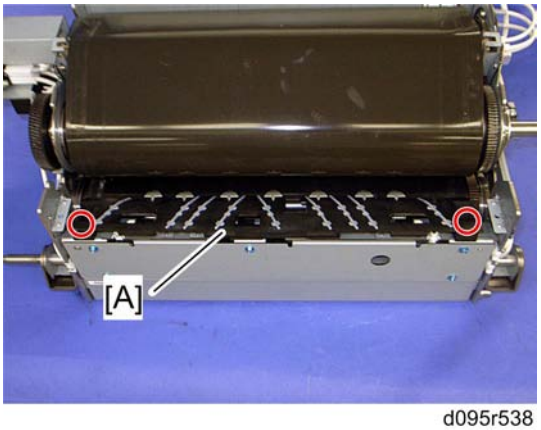

d095r538

4. Fusing exit guide [A] (x 2: step screw at the rear side)

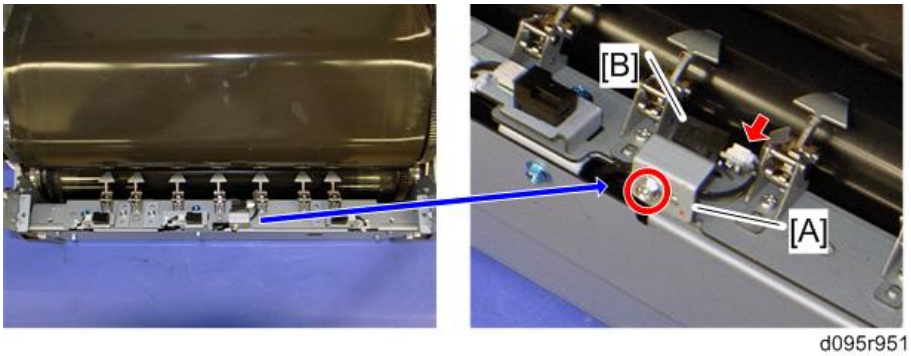

d095r951

5. Accordion jam sensor bracket [A] (x 1, x 1)
6. Accordion jam sensor [B] (hooks)

Fusing Exit Front, Center and Rear Sensor

Fusing Exit Front Sensor

1. Fusing unit (page 520)
2. Fusing upper frame (page 525)
3. Fusing belt stripper plate (page 539)

4. Fusing exit guide (☛page 551 "Accordion Jam Sensor")

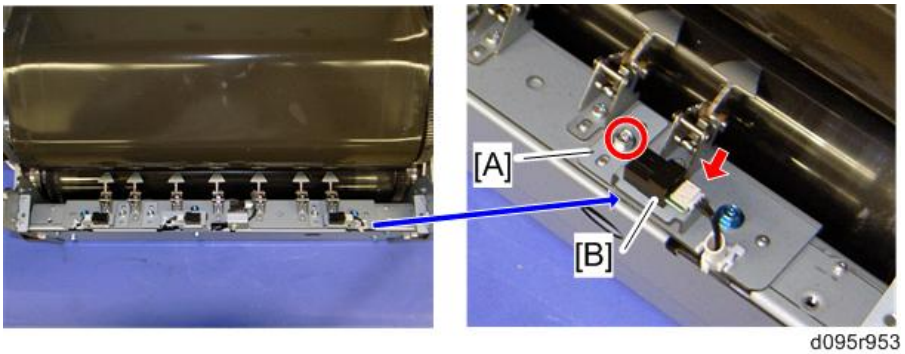

d095r953

5. Fusing exit sensor front bracket [A] (x 1, x 1)
6. Fusing exit front sensor [B] (hooks)

Fusing Exit Center Sensor

1. Fusing unit (☛page 520)
2. Fusing upper frame (☛page 525)
3. Fusing belt stripper plate (☛page 539)
4. Fusing exit guide (☛page 551 "Accordion Jam Sensor")

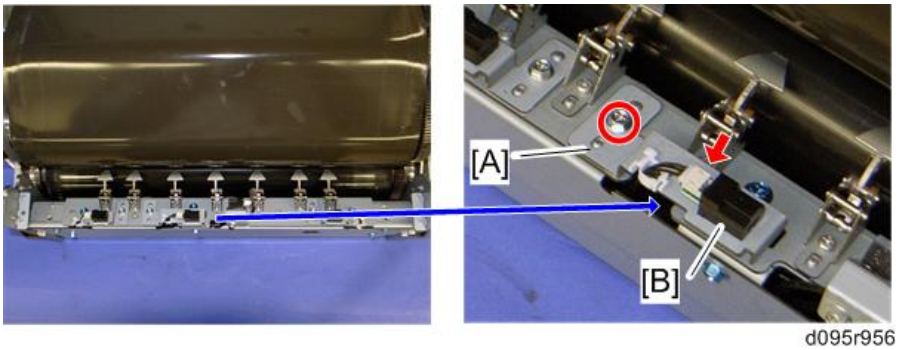

d095r956

5. Fusing exit sensor center bracket [A] (x 1, x 1)
6. Fusing exit center sensor [B] (hooks)

Fusing Exit Rear Sensor

1. Fusing unit (☛page 520)
2. Fusing upper frame (☛page 525)
3. Fusing belt stripper plate (☛page 539)
4. Fusing exit guide (☛page 551 "Accordion Jam Sensor")

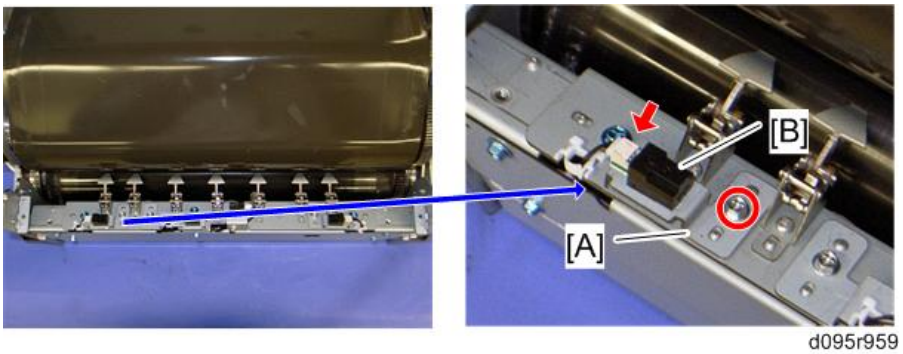

d095r959

5. Fusing exit sensor rear bracket [A] (x 1, x 1)
6. Fusing exit rear sensor [B] (hooks)

Front and Rear Pressure Roller HP Sensors

1. Fusing unit (page 520)
2. Fusing cleaning unit (page 527)

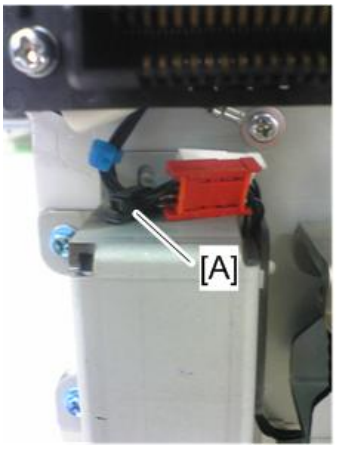

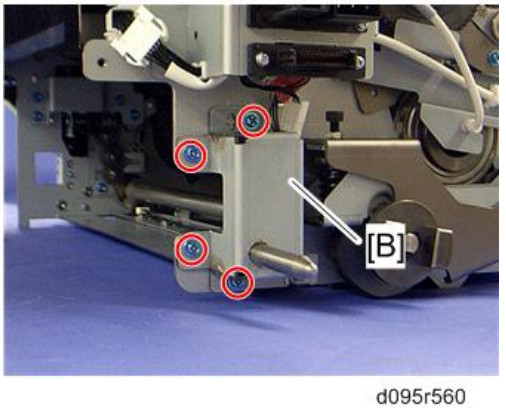

d095r560

3. Release the clamp [A], and then remove the bracket [B] (x 4)

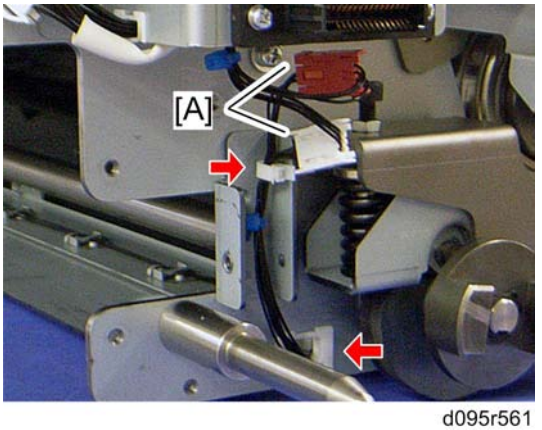

d095r561

4. Disconnect the connectors [A] (x 2)

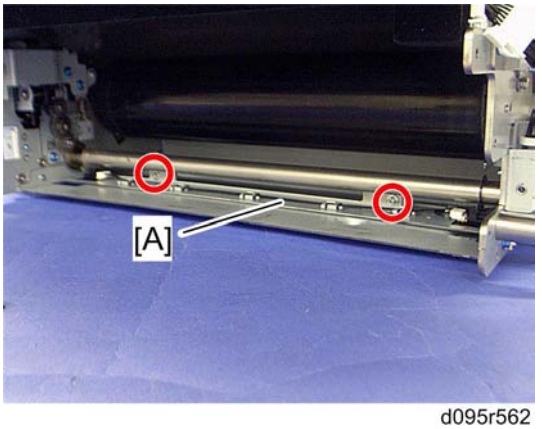

d095r562

5. Sensor unit [A] (x 2)

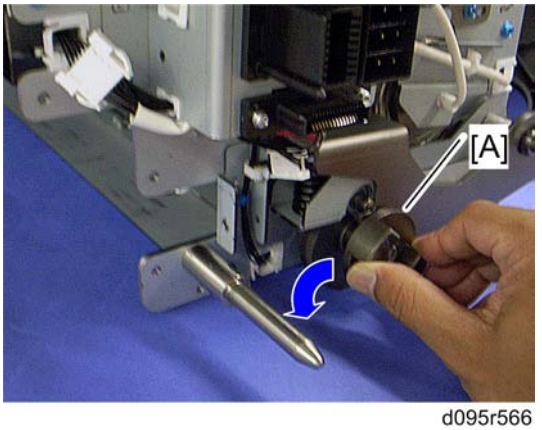

d095r566

Note

- Remove the sensor unit while turning the lever [A] counterclockwise.

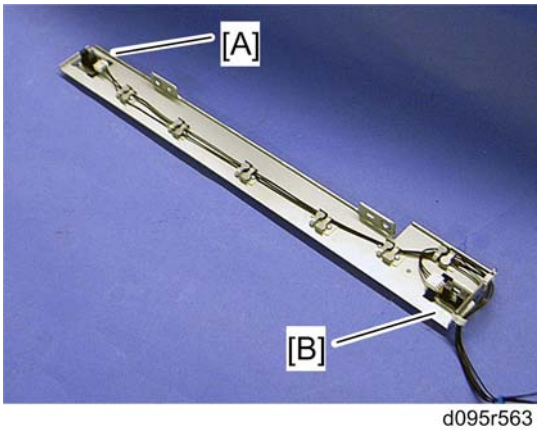

d095r563

6. Front pressure roller HP sensor [A] (x 1, hooks)
7. Rear pressure roller HP sensor [B] (x 1, hooks)

Pressure Roller

1. Fusing unit (page 520)
2. Fusing upper frame (page 525)
3. Fusing belt assembly (page 540)
4. Pressure roller stripper pawl unit (page 549)

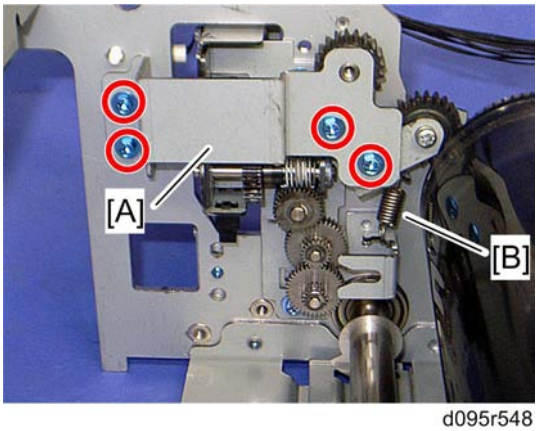

d095r548

5. Bracket [A] (x 4)
6. Remove the spring [B]

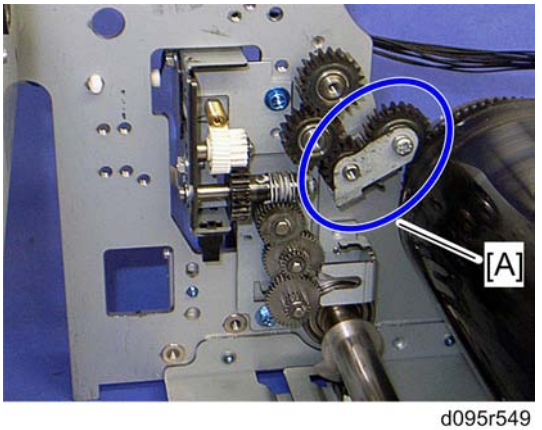

d095r549

7. Idle gear unit [A]

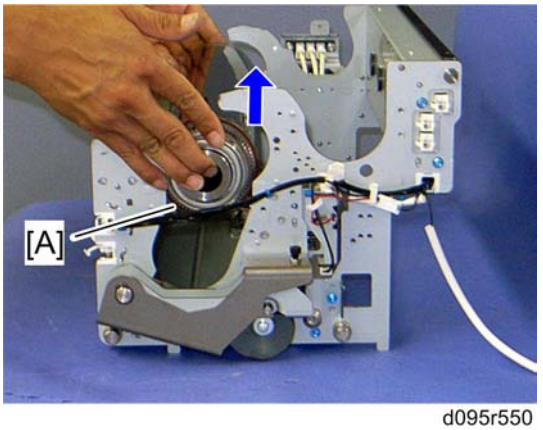

d095r550

8. Hold both ends of the pressure roller [A], and then remove it.

Note

- When installing the pressure roller, make sure that the pressure roller is installed with its gear facing the front side.

After installing a new pressure roller

Clear the PM counter for the pressure roller. See "PM Parts Screen Details" in the chapter "Preventive Maintenance".

Pressure Roller Thermostat

1. Fusing unit (☛page 520)

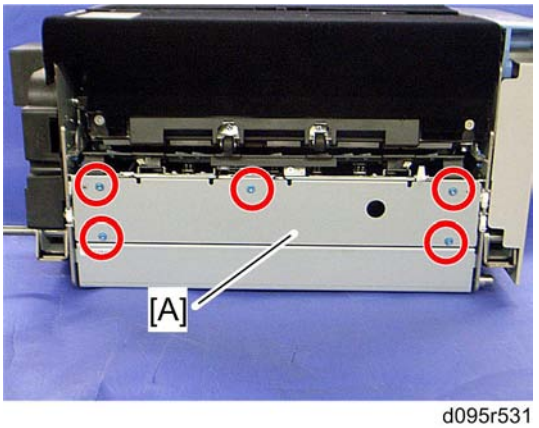

d095r531

1. Fusing unit left stay [A] (x 5)

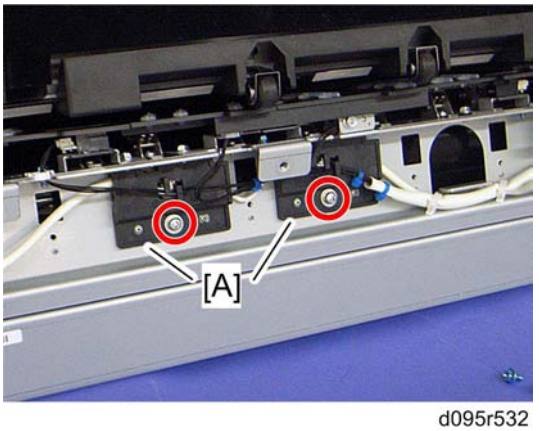

d095r532

2. Thermostat outer covers [A] (x 1 each)

Note

- The removal procedure for each thermostat is identical.

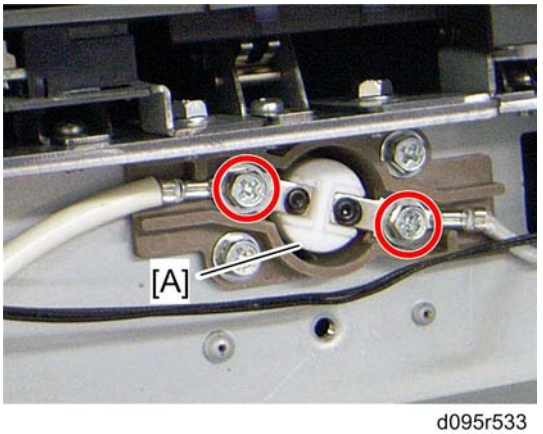

d095r533

3. Pressure roller thermostat [A] (x 2)

Hot Roller Thermistor

1. Fusing front cover (page 524)

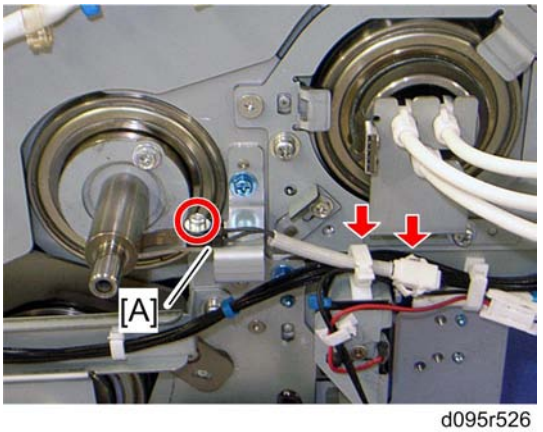

d095r526

2. Fusing roller thermistor [A] (x 1, x 1, x 1)

Fusing Belt Thermistor

1. Fusing front cover (page 524)
2. Open the fusing exit guide while holding up the D1 lever.

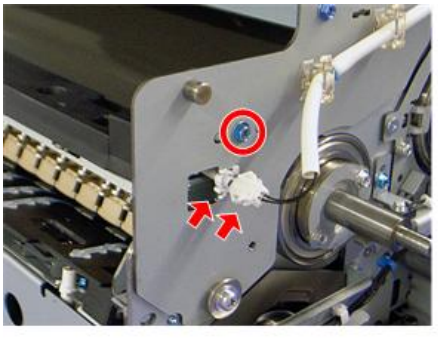

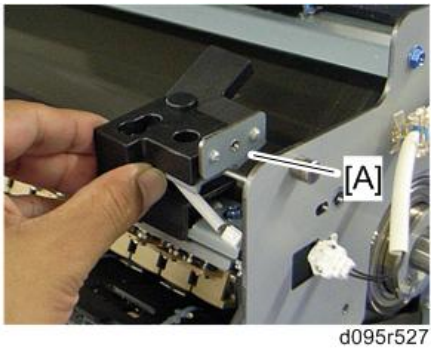

d095r527

3. Fusing belt thermistor unit [A] (x 1, x 1, x 1).

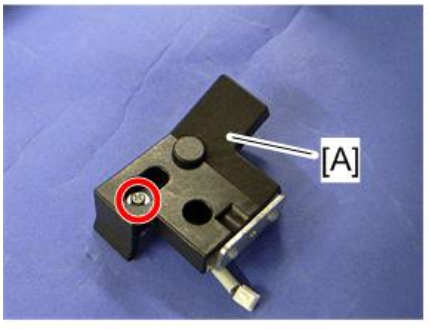

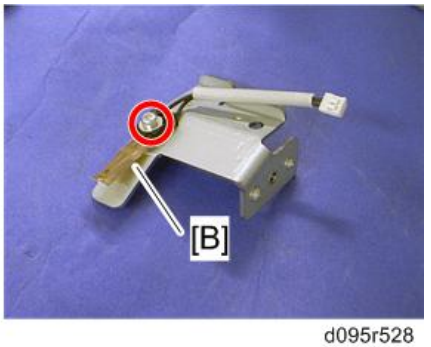

d095r528

4. Holder [A] (x 1)
5. Fusing belt thermistor [B] (x 1)

Cleaning Web Motor and Cleaning Web End Sensor

1. Fusing unit (page 520)
2. Fusing upper frame (page 525)
3. Fusing belt assembly (page 540)

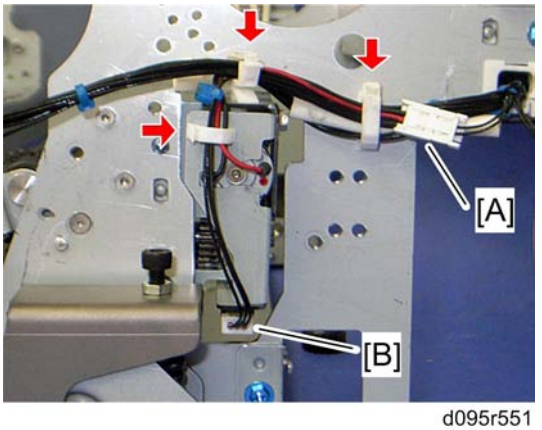

d095r551

4. Disconnect the cleaning web motor connector [A] (x 2)
5. Disconnect the cleaning web end sensor connector [B] (x 1)

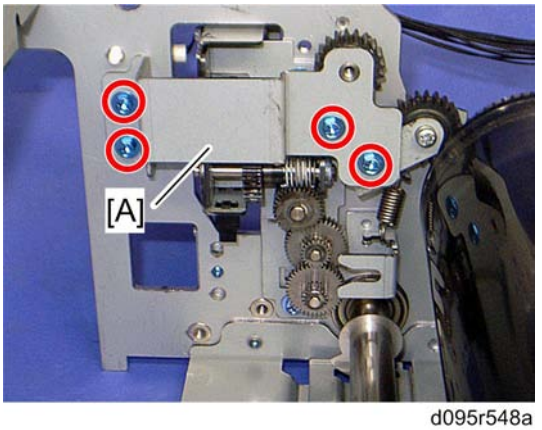

d095r548a

6. Bracket [A] (x 4)

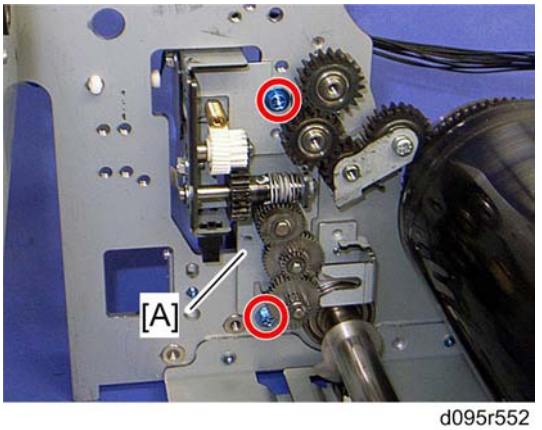

d095r552

7. Cleaning web motor unit [A] (x 2)

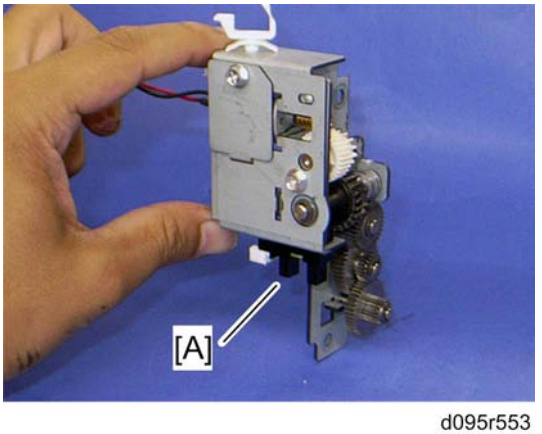

d095r553

8. Cleaning web end sensor [A] (hooks)

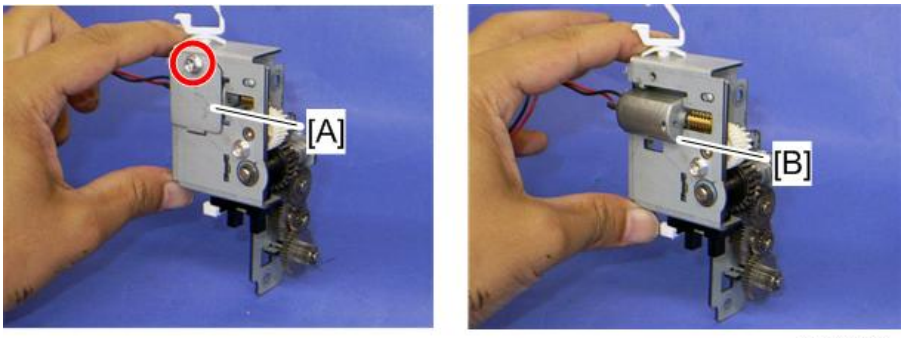

d095r554

9. Bracket [A] (x 1)
10. Cleaning web motor [B]

Fusing Motor

1. Pull out the fusing unit drawer (page 523).
2. Open the rear controller box (page 354).

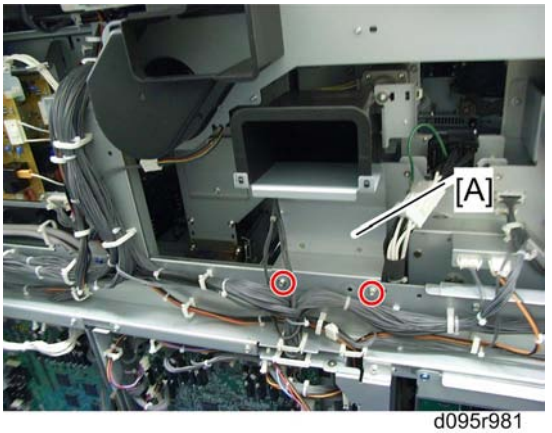

d095r981

3. Duct unit [A] (x 2, x 1)

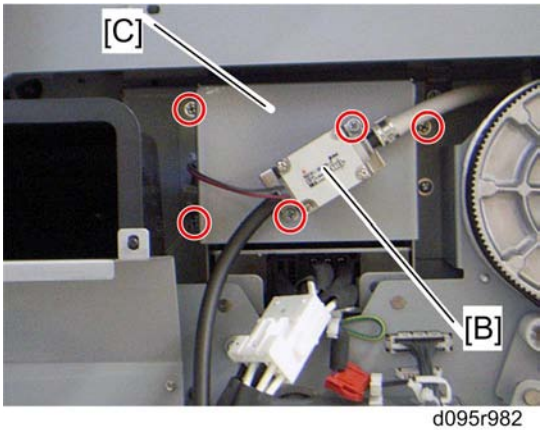

d095r982

4. Electrical valve unit [B] (x 2, x 1)
5. Bracket [C] (x 3)

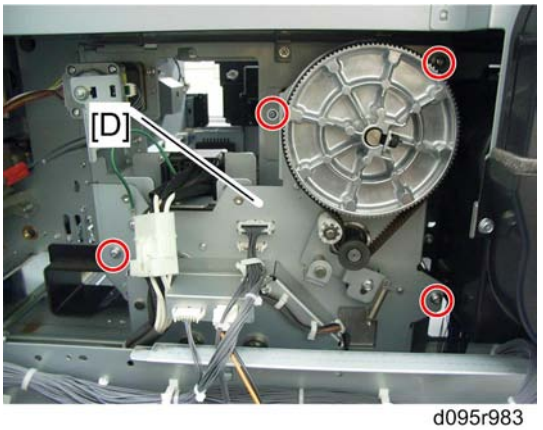

d095r983

6. Fusing motor unit [D] (x 4, x 2, x all)
   - This unit is heavy. Be very careful when you take out and move the fusing motor unit.

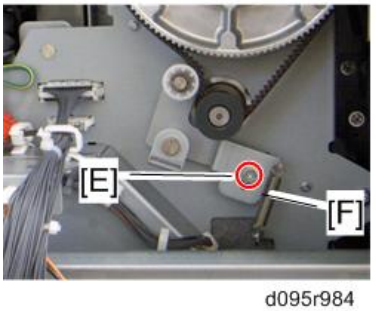

d095r984

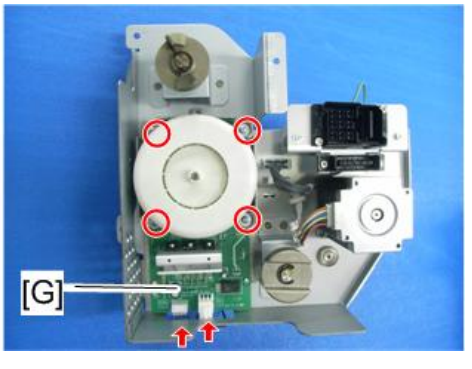

7. Loosen the screw [E], and then remove the spring [F].
8. Fusing motor [G] (x 4, x 2)

Pressure Roller Lift Motor

1. Fusing motor unit (☛page 561 "Fusing Motor")

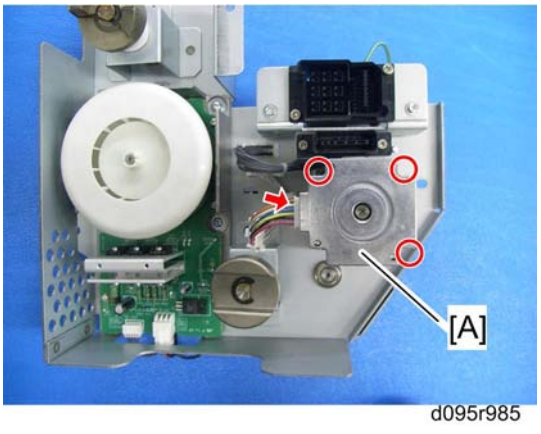

2. Pressure roller lift motor [A] (x 3, x 1)

Paper Transport and Exit

PTB (Paper Transport Belt) Unit

1. Pull out the fusing unit drawer. (page 523)

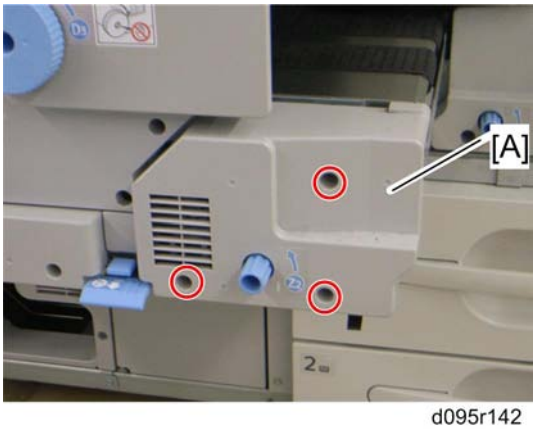

d095r142

2. Inner cover for PTB [A] (x 3)

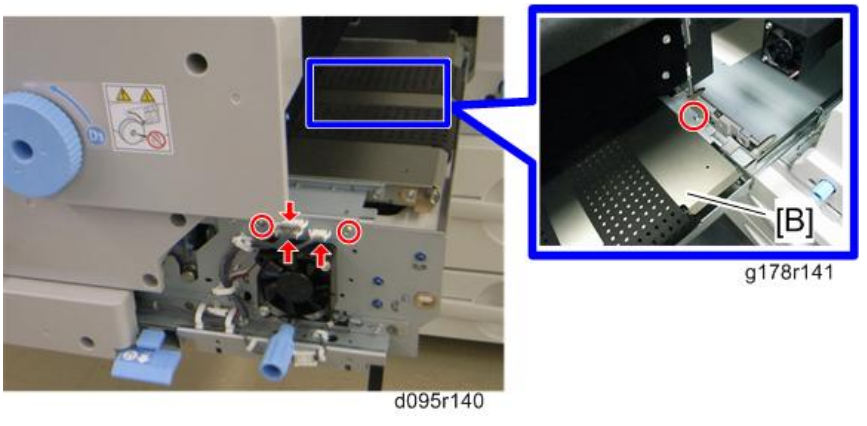

g178r141

d095r140

3. PTB unit [B] (x 3, x 3)

Paper Transport Belt

1. PTB unit (page 564)

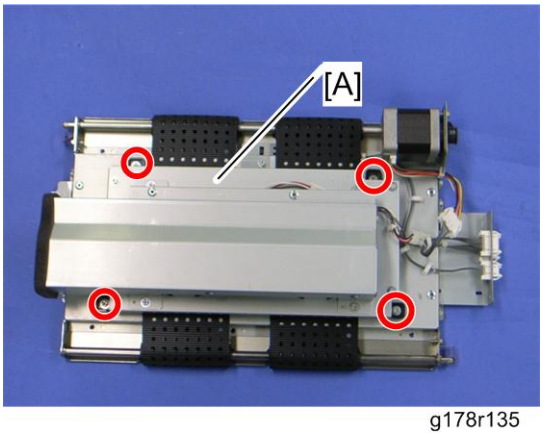

g178r135

2. PTB fan unit [A] (x 4, x 1, x 1)

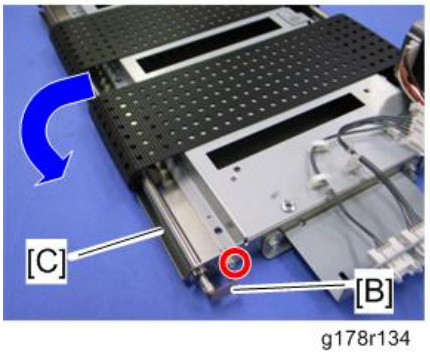

g178r134

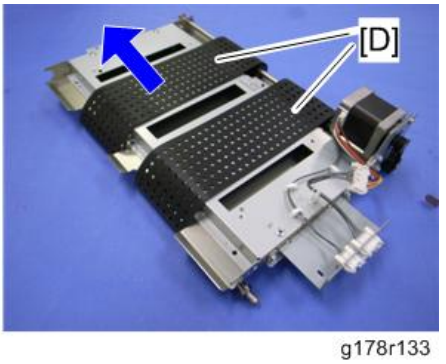

g178r133

3. Ground plate [B] (x 1)
4. Pull the roller [C] and release it from the bracket.
5. Paper transport belts [D]

PTB Motor

1. PTB unit (page 564)

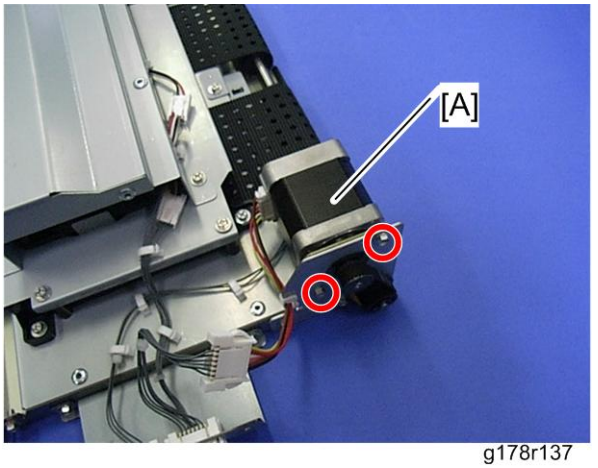

g178r137

2. PTB motor [A] (x 2, x 1)

PTB Jam Sensor

1. PTB unit (page 564)
2. PTB transport belt (page 564)

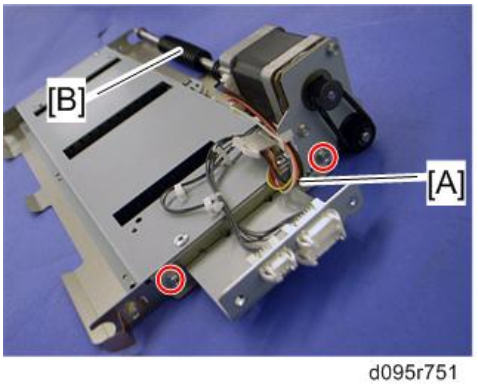

d095r751

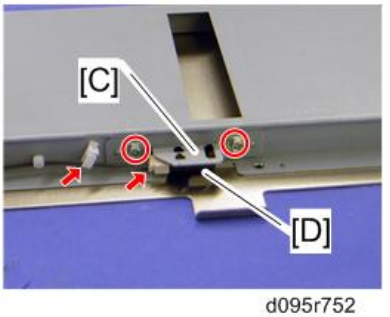

d095r752

3. Bracket [A] (x 2)
4. PTB drive roller [B] (timing belt x 1)
5. PTB jam sensor bracket [C] (x 1, x 1, x 1)
6. PTB jam sensor [D] (hooks)

PTB Fan 1 and 2

1. PTB unit (page 564)

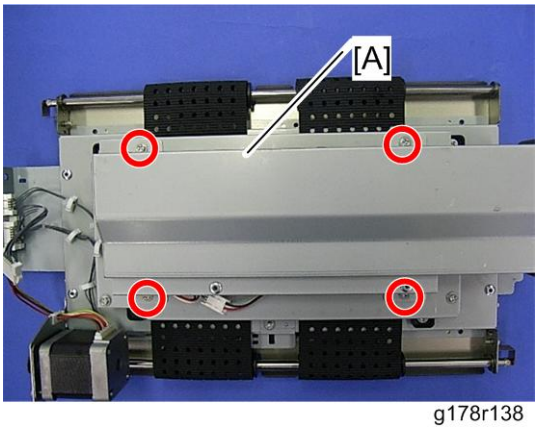

g178r138

2. Duct bracket [A] (x 4)

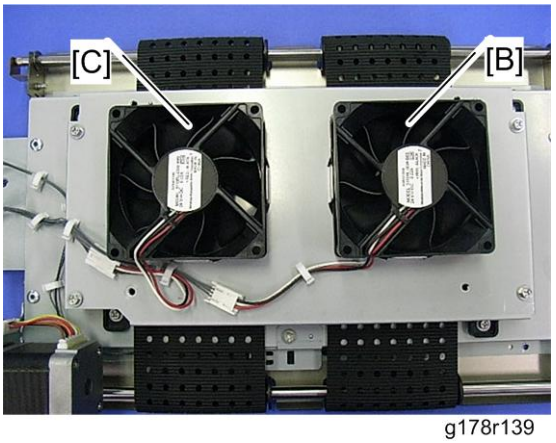

g178r139

3. PTB fan 1 [B] (x 1, x 1)
4. PTB fan 2 [C] (x 2, x 1)

Paper Exit Motor

1. Open the rear controller box (page 354)
2. Left cover (page 344)

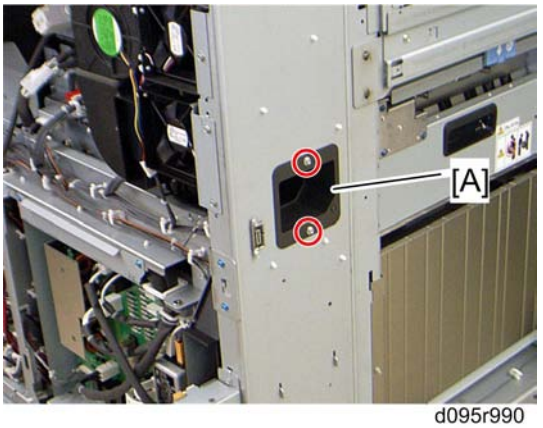

d095r990

3. Duct [A] at the left rear frame (x 2)

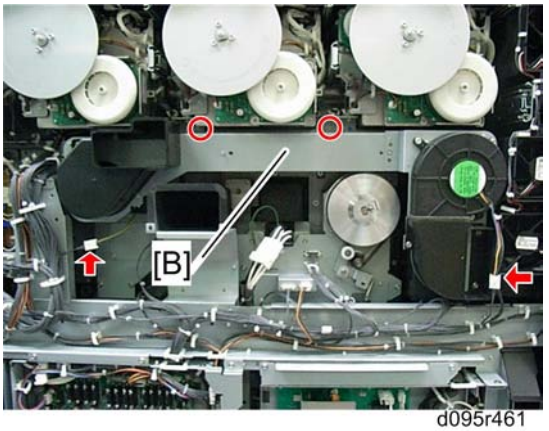

d095r461

4. Fusing fan 5 and 6 unit [B] (x 2, x 2)

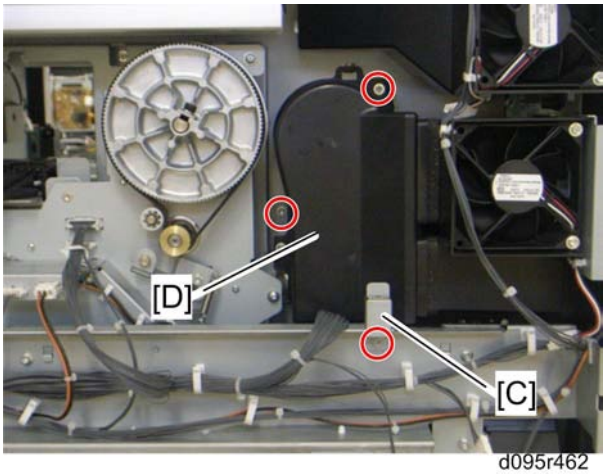

d095r462

5. Bracket [C] (x 1)

6. Paper cooling fan 1 duct [D] (x 2, x 1)

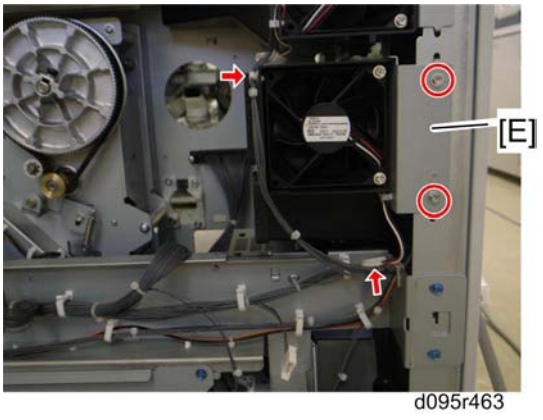

7. Paper cooling fan 2 duct [E] (x 2, x 1, x 1)

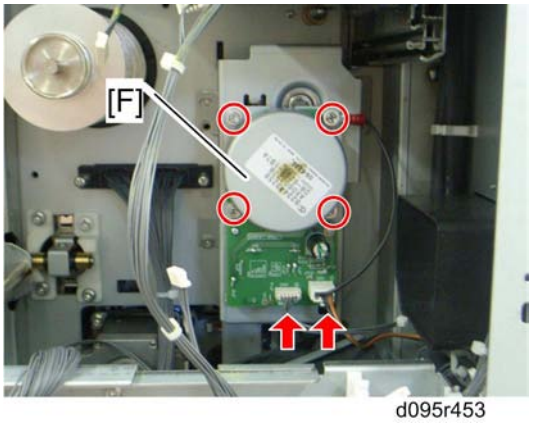

8. Paper exit motor [F] (x 2, x 2)

Paper Exit Sensor

1. Pull out the fusing unit drawer (page 523).

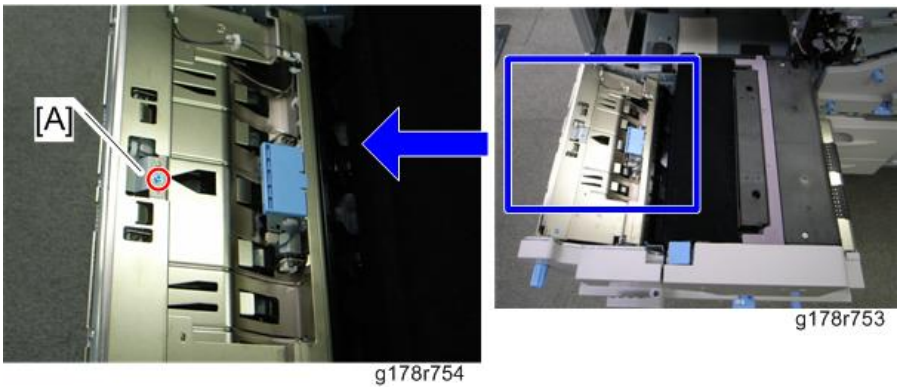

g178r754

g178r753

2. Paper exit sensor bracket [A] (x 1)

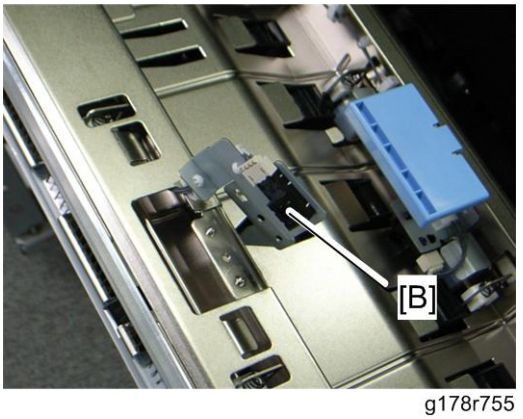

g178r755

3. Paper exit sensor [B] (x 2, x 1, hooks)

Exit Junction Timing Sensor

1. Pull out the fusing unit drawer (page 523).

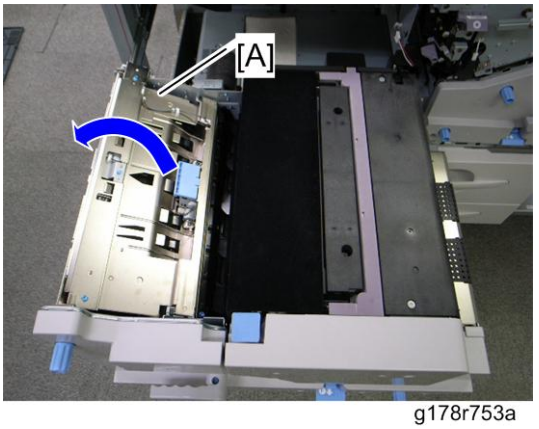

g178r753a

2. Open the jam removal door [A].

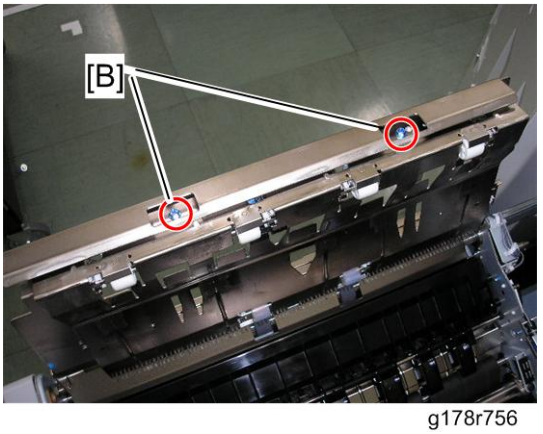

g178r756

3. Timing sensor bracket [B] (x 2)

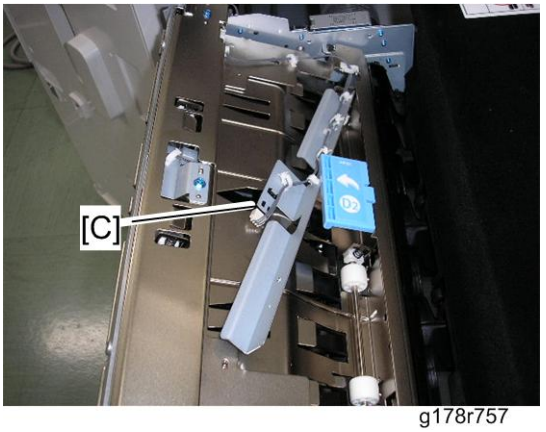

g178r757

4. Exit junction timing sensor [C] (x 4, x 1, hooks)

Inverter Motor

1. Fusing unit drawer (page 523)

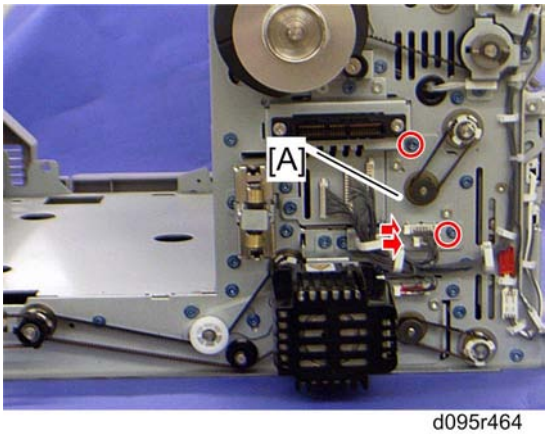

d095r464

2. Inverter motor bracket [A] (x 2, x 1)

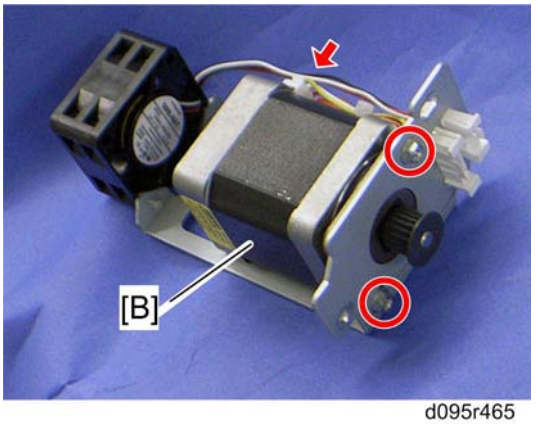

d095r465

3. Inverter motor [B] (x 2, x 1)

Inverter Motor Fan

1. Inverter motor bracket (page 571 "Inverter Motor")

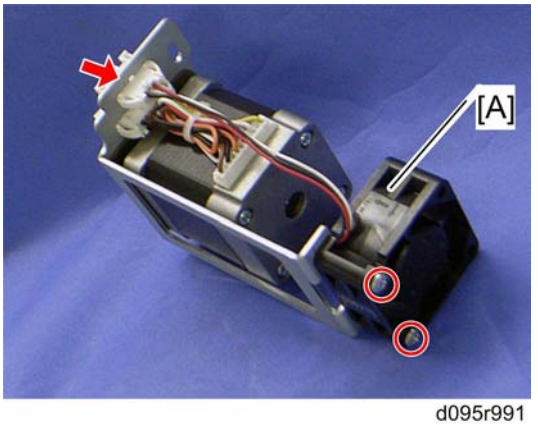

d095r991

2. Inverter motor fan [A] (x 2, x 1)

Important

- When you reinstall the inverter motor fan, make sure that the inverter motor fan is installed with its decal facing the rear side.

Duplex Transport Motor 1

1. Fusing unit drawer (page 523)

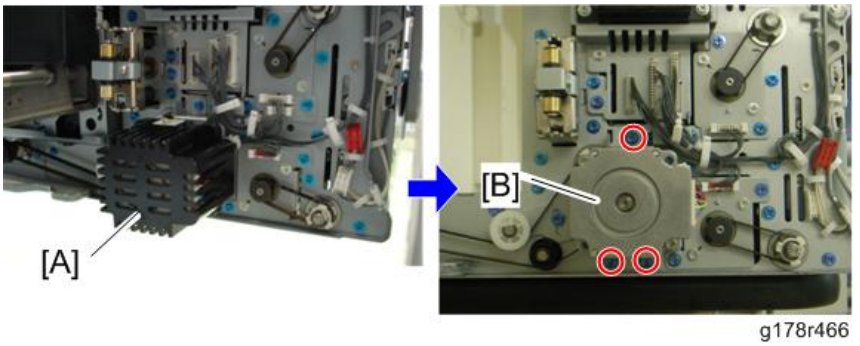

g178r466

2. Motor cover [A]
3. Duplex Transport Motor 1 bracket [B] (x 3, x 1)

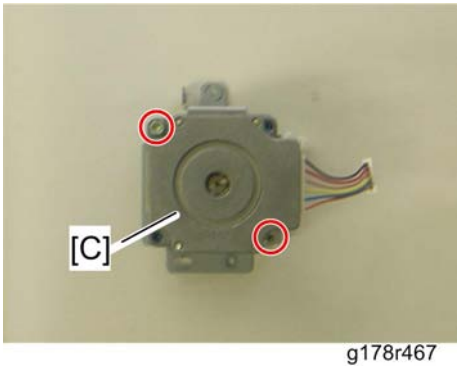

g178r467

4. Duplex Transport Motor 1 [C] (x 2)

Switchback Motor

1. Fusing unit drawer (page 523)
2. Duplex transport motor 1 bracket (page 575 "Duplex transport sensor 1")

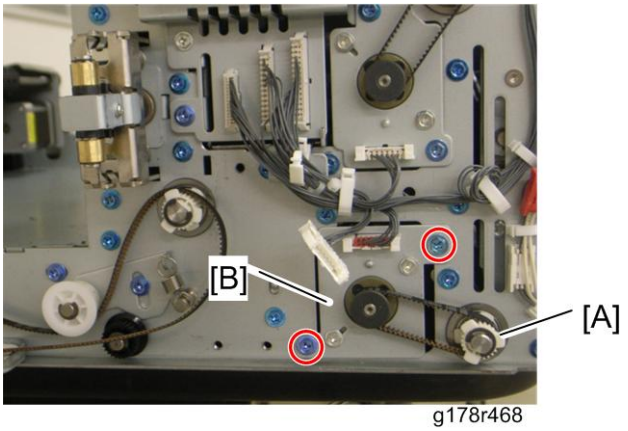

g178r468

3. Gear [A] (x 1, timing belt x 1)
4. Switchback motor bracket [B] (x 2, x 1)

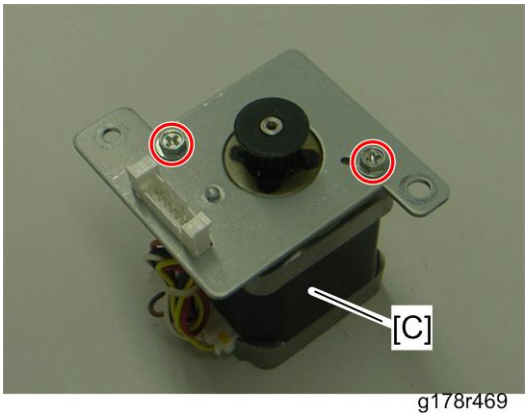

g178r469

5. Switchback motor [C] (x 2)

Duplex Transport Sensor 1 and 2

Duplex transport sensor 1

1. Pull out the fusing unit drawer (page 523).

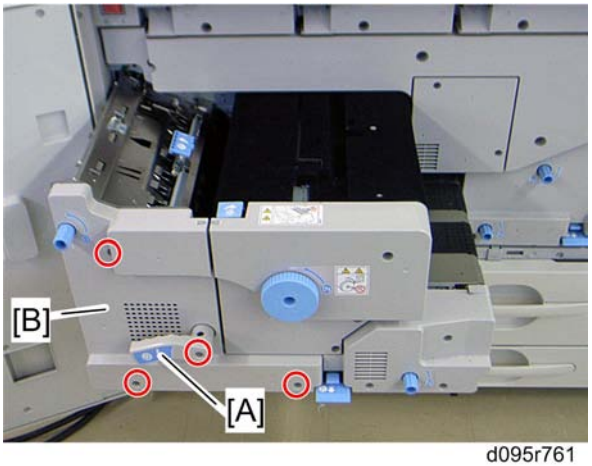

d095r761

2. Lock lever [A] for the fusing unit (x 1)
3. Inner cover [B] for the paper exit unit (x 3)

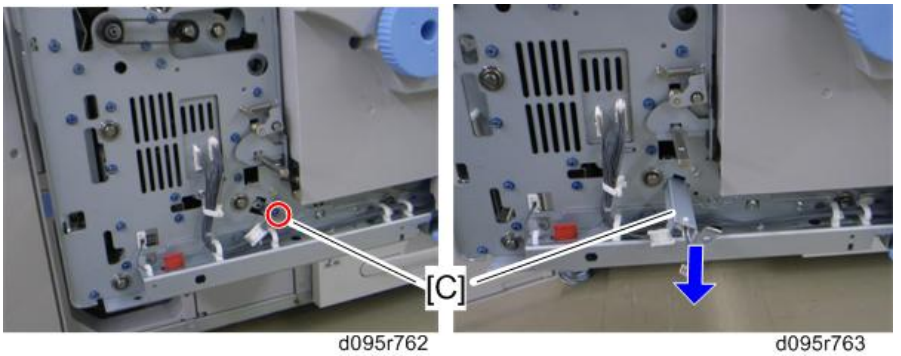

d095r762 d095r763

4. Duplex sensor 1 bracket [C] (x 1, x 1)

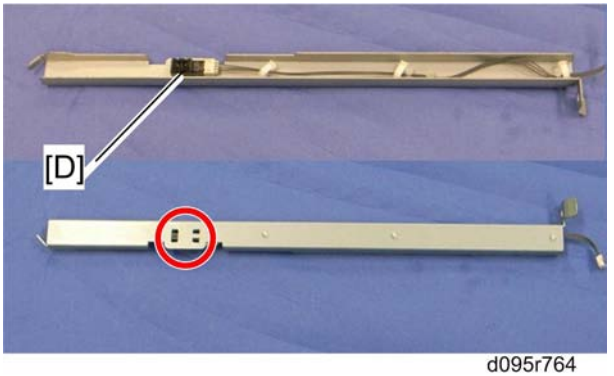

d095r764

5. Duplex transport sensor 1 [D] (hooks, x 3, x 1)

Duplex transport sensor 2

1. Pull out the fusing unit drawer (page 523).
2. Inner cover for PTB (page 564 "PTB (Paper Transport Belt) Unit")

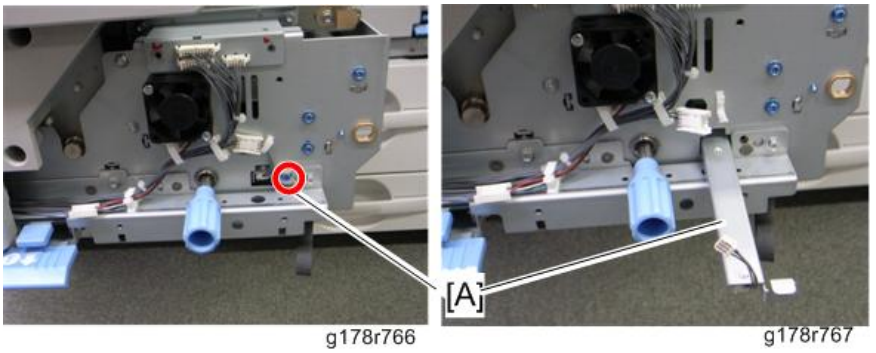

g178r766 g178r767

3. Duplex sensor 2 bracket [A] (x 1, x 1, x 1)

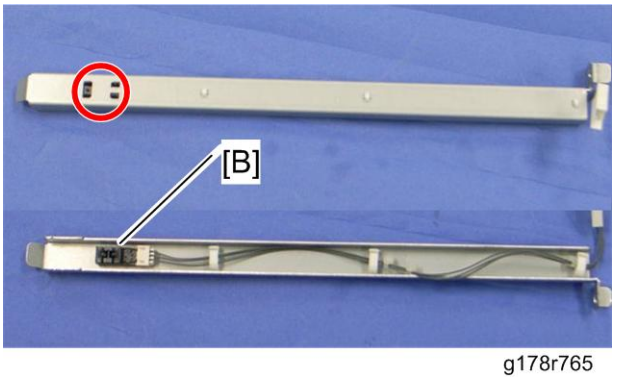

g178r765

4. Duplex transport sensor 2 [B] (hooks, x 3, x 1)

Switchback Sensor

1. Pull out the fusing unit drawer (page 523).

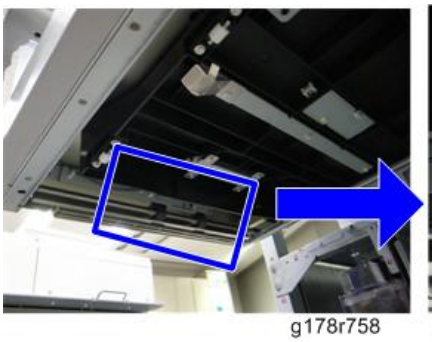

g178r758

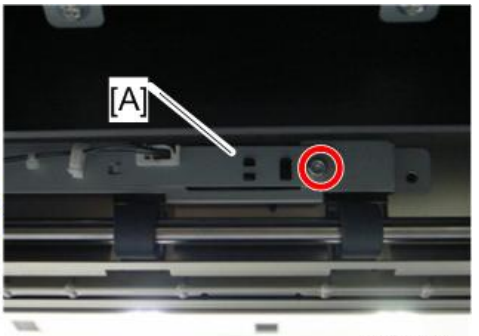

g178r759

2. Switchback sensor bracket [A] (x 1)

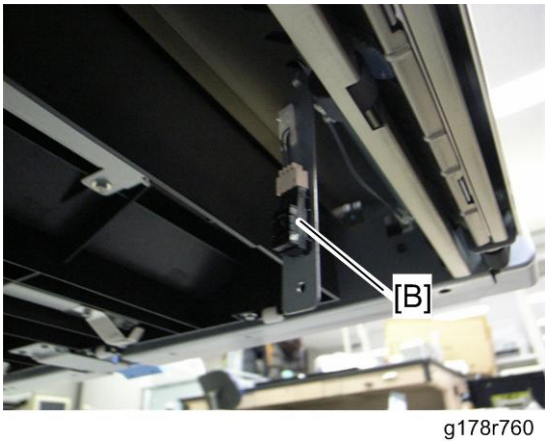

g178r760

3. Switchback sensor [B] (x 1, hooks, x 1)

Switchback Lower Sensor

1. Left front door (☛page 343)

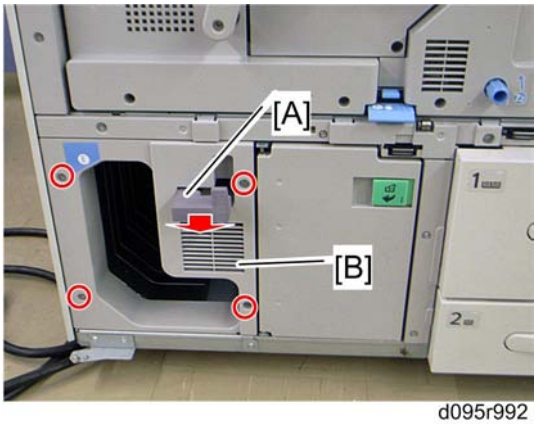

d095r992

2. Pull out the fusing unit handle [A].
3. Purge tray inner cover [B] (x 4)

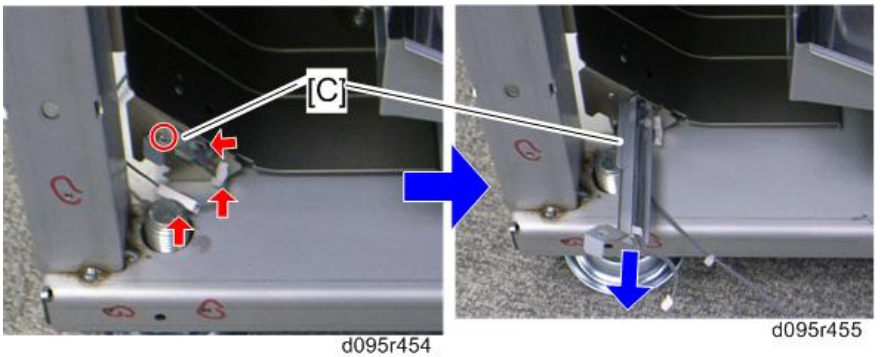

d095r454 d095r455

4. Pull out the sensor bracket [C] (x 1, x 1, x 2)

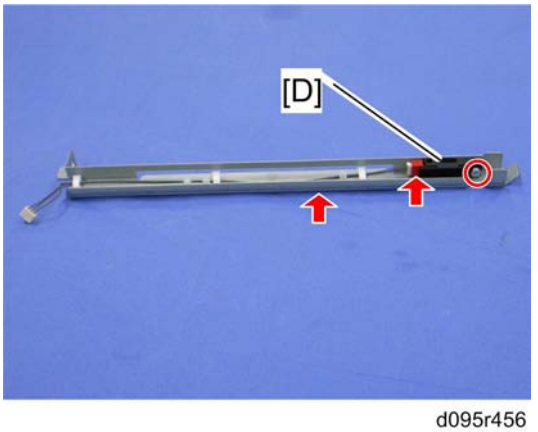

d095r456

5. Switchback lower sensor [D] (x 1, x 1, x 1)

PTR Unit Cooling Fan

1. Left front door (page 343)
1. Purge tray inner cover (page 578 "Switchback Lower Sensor")

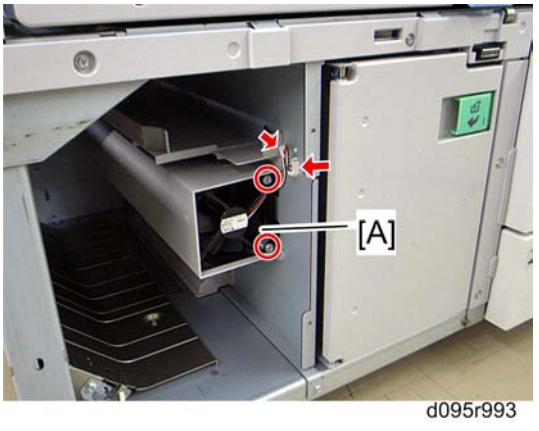

2. PTR unit cooling fan [A] (x 2, x 1, x 1)

Important

- When you reinstall the PTR unit cooling fan, make sure that the PTR unit cooling fan is installed with its decal facing the front.

PDB (Paper exit Drive Board)

1. Pull out the fusing unit drawer (page 523).
2. Inner cover for the fusing unit (page 575 "Duplex transport sensor 1")

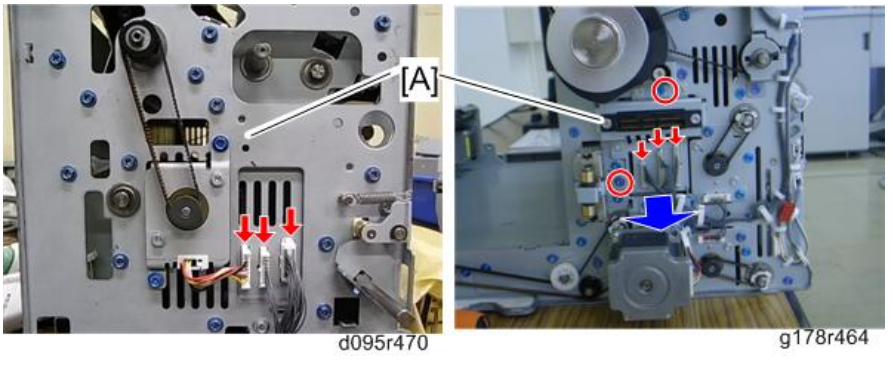

3. PDB unit [A] (x 3: front side, x 2, x 3: rear side)

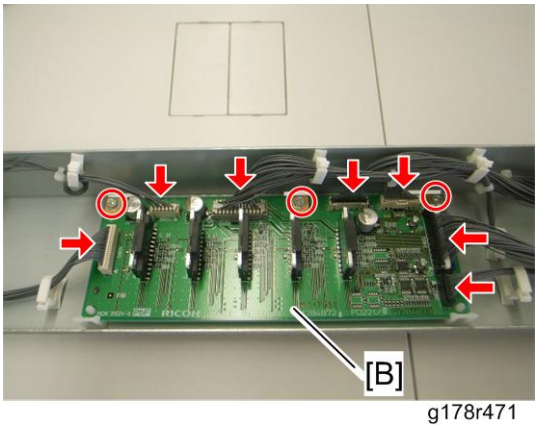

g178r471

4. PDB [B] (x 3, x all, stud x2)

Paper Exit Transport Motor

1. Pull out the fusing unit drawer (page 523).
2. Inner cover for the fusing unit (page 575 "Duplex transport sensor 1")

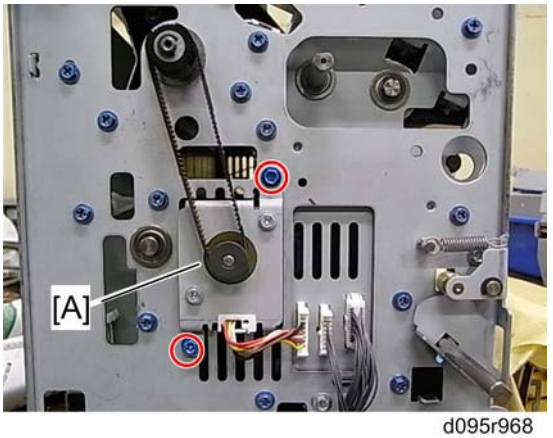

d095r968

3. Paper exit transport motor bracket [A] (x 2, timing belt x 1)

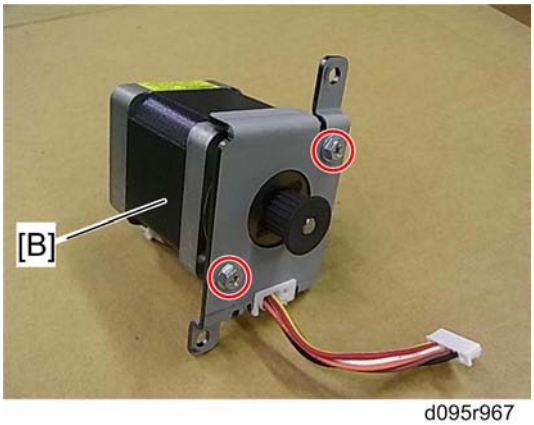

d095r967

4. Paper exit transport motor [B] (x 2)

De-curler Unit

CAUTION

- Most parts in the de-curler unit have been precisely adjusted at the factory. Do not reassemble the parts, whose replacement procedures are not mentioned in this manual. Otherwise, the adjustment for the de-curler unit requires the special tools.
- Only following parts can be replaced without the de-curler unit adjustment.
- De-curler Unit Motor
- De-curler Feed Motor
- De-curler Unit HP and Limit Sensor

1. Left cover (page 344)

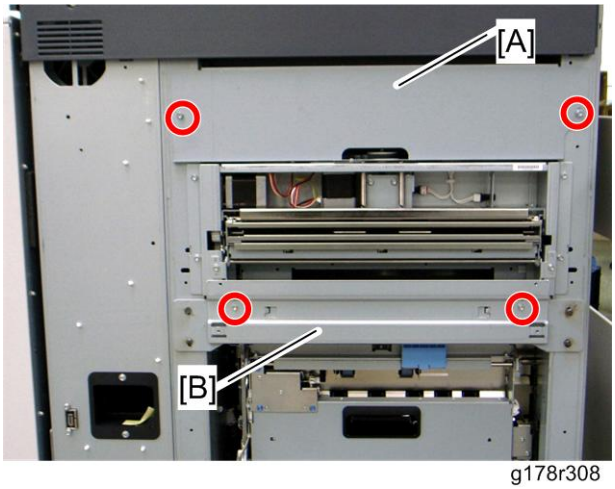

g178r308

2. Left upper stay [A] (x 2)
3. Left middle stay [B] (x 2)

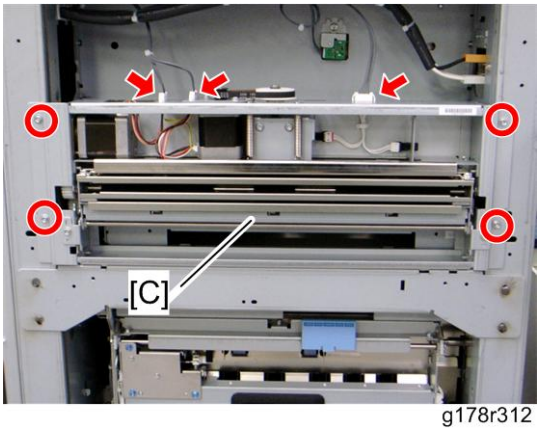

g178r312

4. De-curler unit [C] (x 2, x 3)

After installing a new de-curler unit

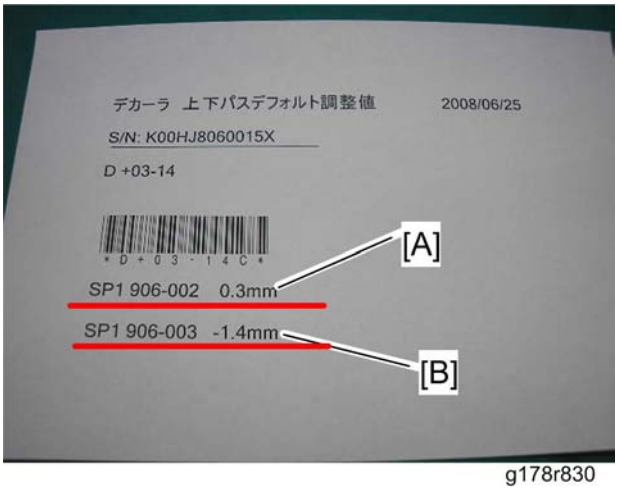

g178r830

Each de-curler unit has a setting sheet. Adjustment is required after installing a new de-curler unit.

- Input the value [A] in SP1906-002 and the value [B] in SP1906-003.

De-curler Unit Motor

1. De-curler unit (page 581)

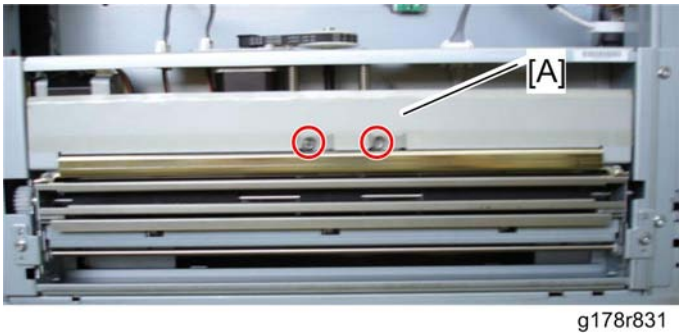

g178r831

2. De-curler cover [A] (x 2)

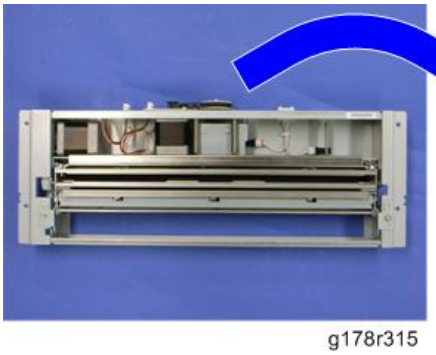

g178r315

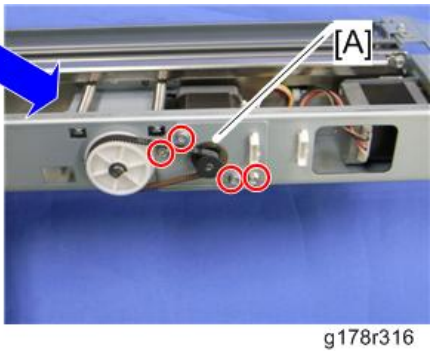

g178r316

3. De-curler unit motor bracket [A] (x 4, timing belt)

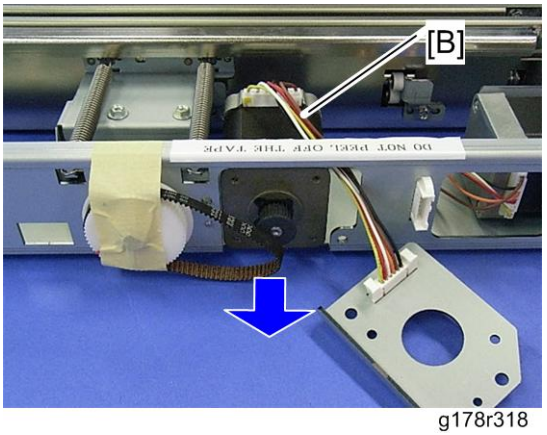

g178r318

4. De-curler unit motor [B] (x 1)

De-curler Feed Motor

1. De-curler unit (page 581)
2. De-curler cover (page 582 "De-curler Unit Motor")

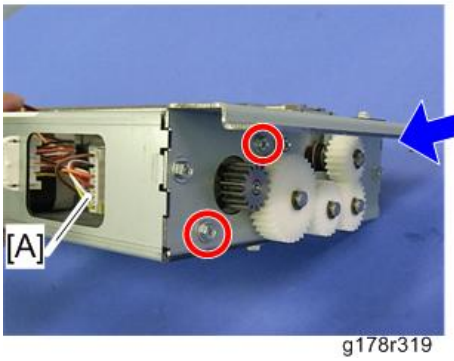

g178r319

g178r315

3. De-curler feed motor [A] (x 2, x 1)

De-curler Unit HP and Limit Sensor

1. De-curler unit (page 581)
2. De-curler cover (page 582 "De-curler Unit Motor")

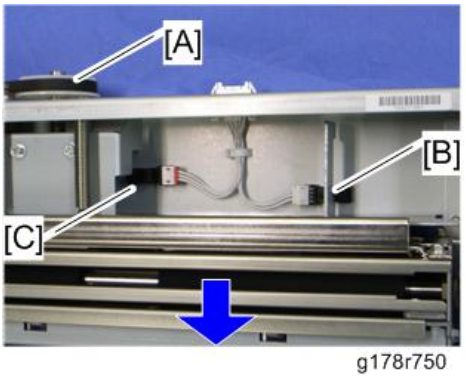

g178r750

g178r749

3. Turn the pulley to lower the de-curler roller unit [A].
4. De-curler unit limit sensor [B] (x 1, hooks)
5. De-curler unit HP sensor [C] (x 1, hooks)

Electrical Components

Board Location

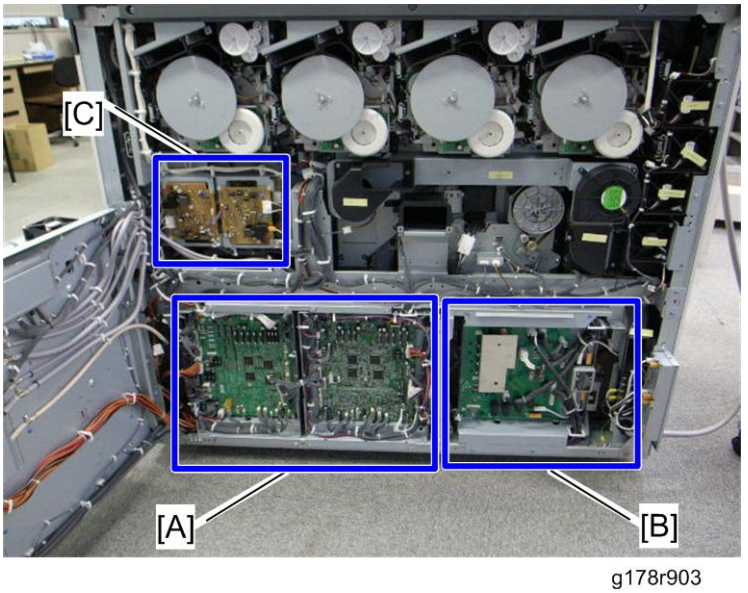

g178r903

[A]: IOB 1, IOB 2 (outside), BCU (inside)

[B]: AC drive board (outside), FIB, RB, PSU-G (inside)

[C]: CGB HVPS-K, -C, -M, -Y

IOB 1 and 2

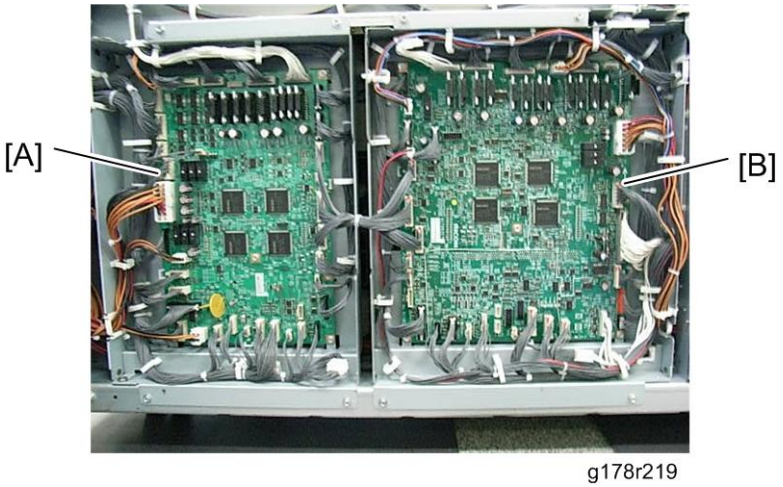

g178r219

[A]: IOB 1, [B] IOB2

IOB 1

1. Open the rear controller box (page 354).

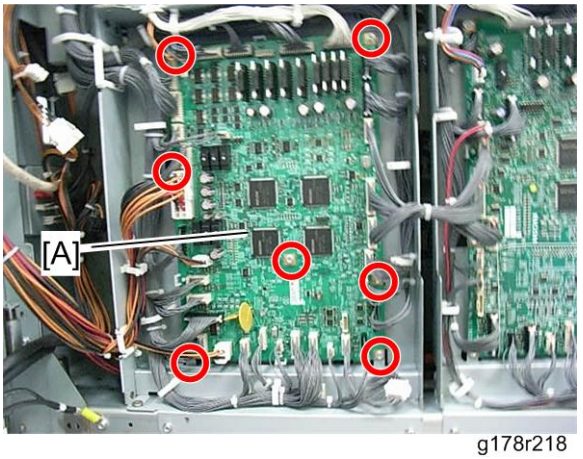

g178r218

2. IOB 1 [A] (x 7, x all)

IOB 2

1. Open the rear controller box (page 354).

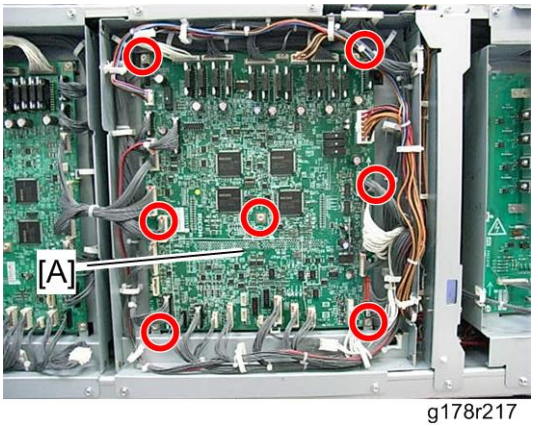

g178r217

2. IOB 2 [A] (x 7, x all)

IOB Brackets

Opening out the IOB 1 Bracket

1. Open the rear controller box (page 354).

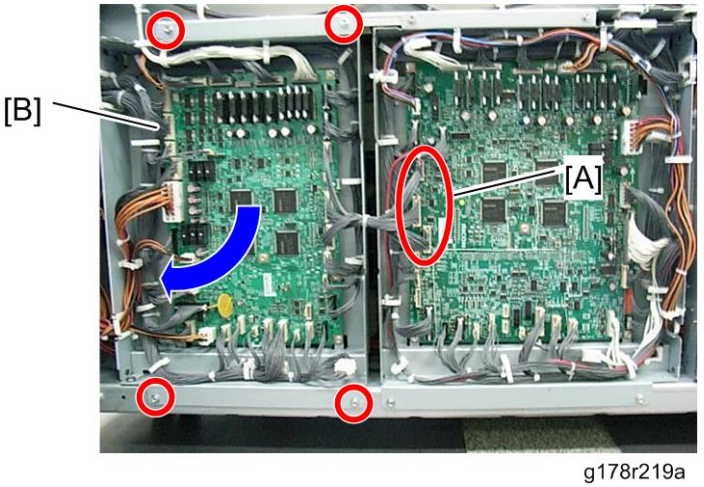

g178r219a

2. Disconnect the three harnesses [A] on IOB 2.
3. Open out the IOB 1 bracket [B] (x 4)

g178r235

4. The picture above shows that the IOB 1 bracket is open.

Opening out the IOB 2 Bracket

1. Open out the IOB 1 bracket (see the previous procedure).

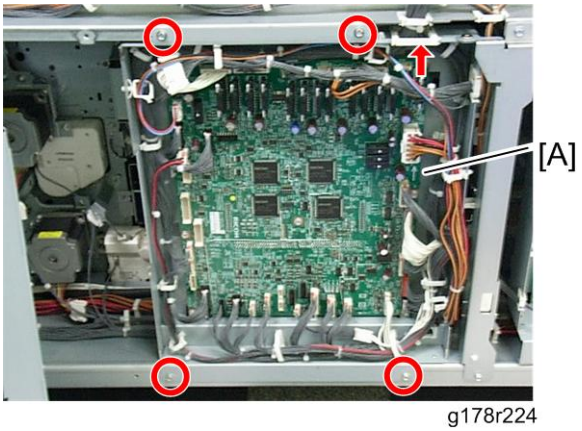

g178r224

2. Pull the IOB 2 bracket [A] (x 4, x 1)

Note

- Do not open out the IOB 2 bracket fully at this time. The BCU is connected on the back side of this bracket with two cables.

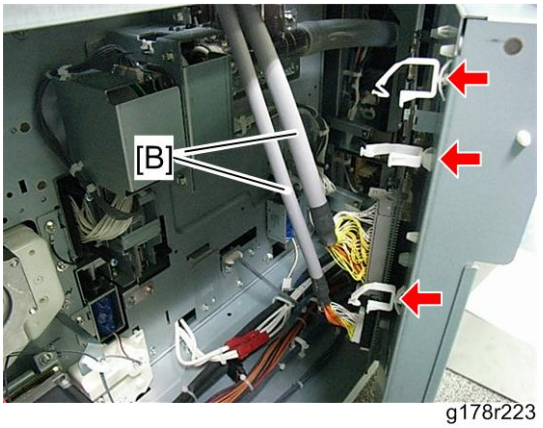

g178r223

3. Release the three clamps and then disconnect the two cables [B].

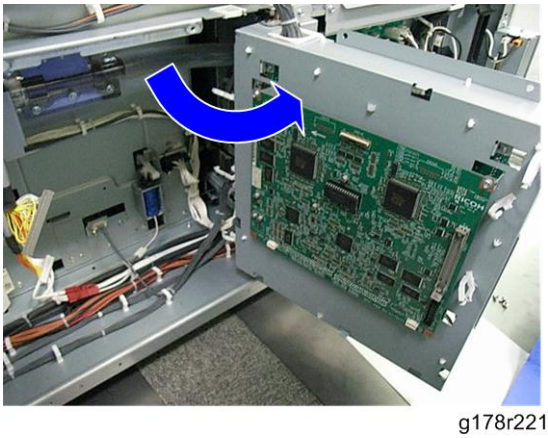

g178r221

4. Open out the IOB 2 bracket fully.

BCU

1. Open the rear controller box (☛page 354).
2. Open out the IOB 1 and 2 brackets (☛page 587).

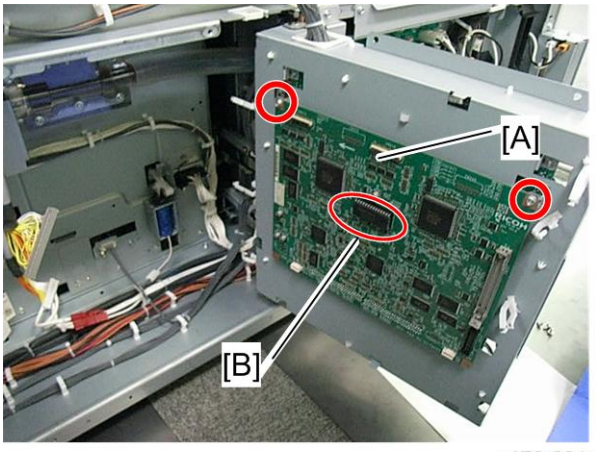

g178r221a

3. BCU [A] (x 2)
4. NVRAM [B]

Note

- Install this NVRAM on the new BCU.

When reinstalling the BCU

The BCU is connected to the IOB 2 via a board-to-board connector. When you reinstall the BCU, press down the BCU and make sure that the BCU is firmly connected to the IOB 2.

When installing a new BCU

Remove the BCU NVRAM from the old BCU and install it on the new BCU.

AC Drive Board

1. Open the rear controller box (page 354).

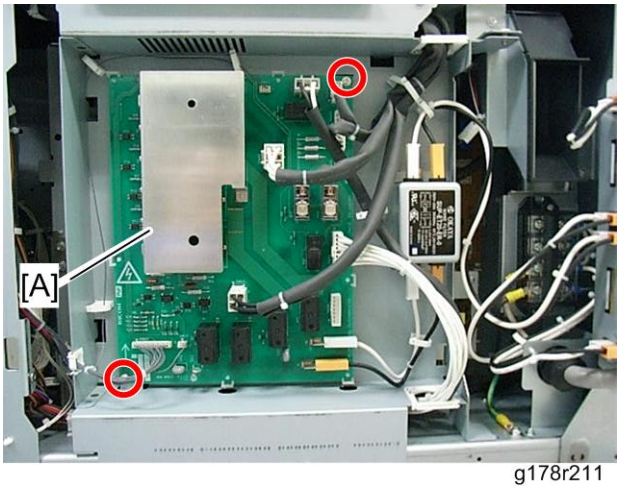

g178r211

2. AC drive board [A] (x 1, stud x 1, x all)

FIB (Finisher Interface Board) and RB (Relay Board)

1. Open the rear controller box (page 354).

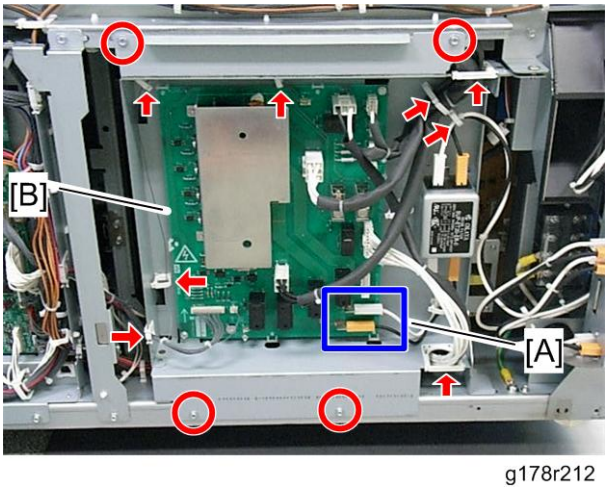

g178r212

2. Disconnect all connectors, except for the two connectors [A] on the AC drive board, and release the clamps.
3. Open out the AC drive board bracket [B] (x 4).

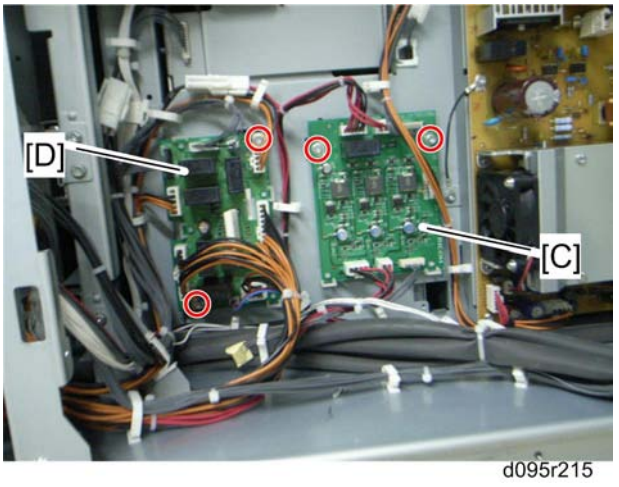

4. FIB [C] (x 2, x all)
5. RB [D] (x 2, x all)

PSU-G

1. Open the rear controller box (page 354).
2. Pull out the fusing drawer (page 523)
3. Paper cooling fan 2 duct (page 567 "Paper Exit Motor")

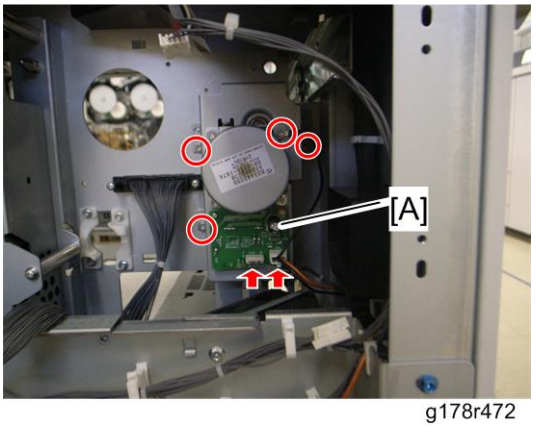

4. Paper exit motor bracket [A] (x 4, x 2)

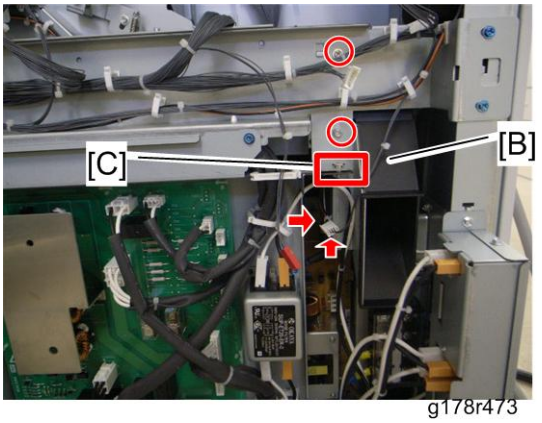

g178r473

5. Exit fan duct [B] (x 2, x 1, x 1)
6. Remove the stud screw [C].
7. Open out the AC drive board bracket (page 591 "FIB (Finisher Interface Board) and RB (Relay Board)").

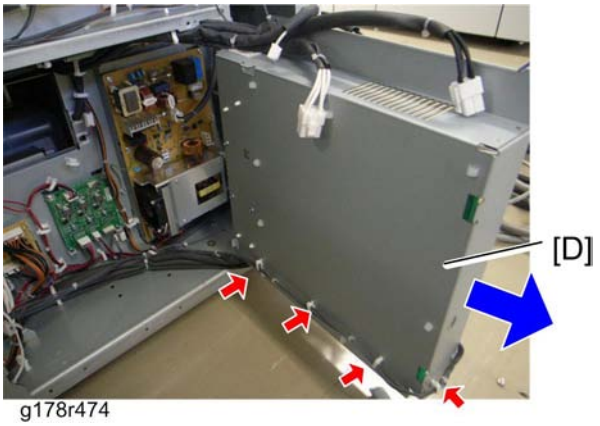

g178r474

8. Remove the AC drive board bracket [D] (x all)

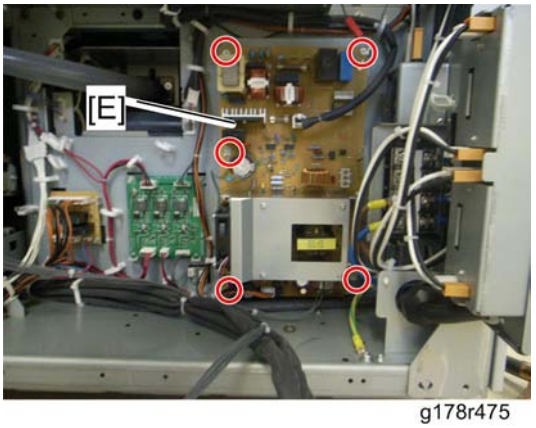

g178r475

9. PCU-G [E] (x 5, stud x 1, x all)

CGB HVPS

1. Open the rear controller box (page 354).

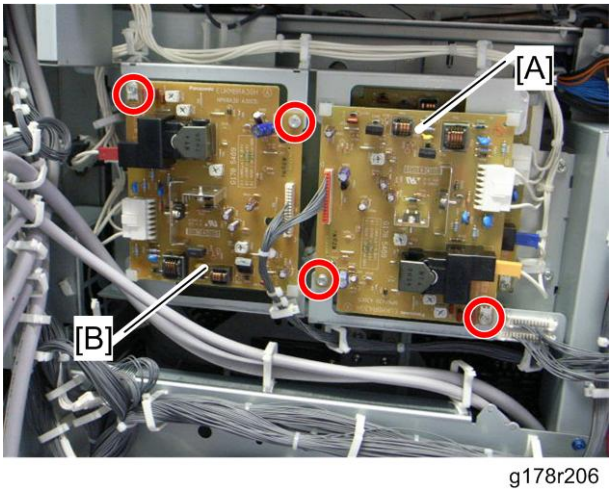

g178r206

2. CGB HVPS-Y [A] (x 2, x 3)
3. CGB HVPS-M [B] (x 2, x 3)

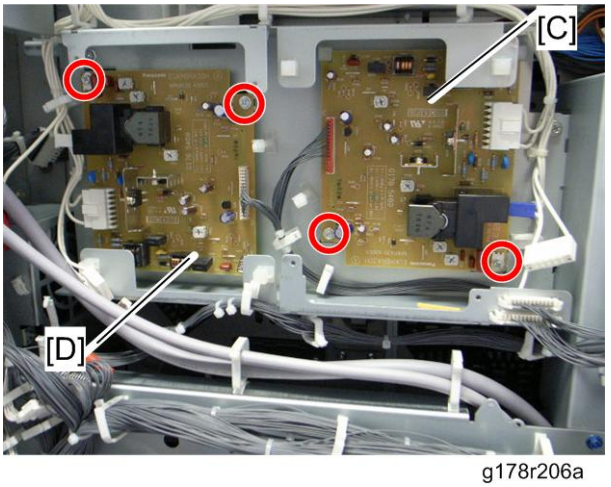

g178r206a

4. CGB HVPS-C [C] (x 2, x 3)
5. CGB HVPS-K [D] (x 2, x 3)

Controller NVRAM and DIMM

⚠CAUTION

- If you change the NVRAM in the controller, and the DataOverwriteSecurity unit is installed, this DataOverwriteSecurity unit must be replaced with a new one.

Before Controller NVRAM Removal

This procedure is for the controller NVRAM removal. If you just replace a DIMM, skip to the "Removal Procedure".

1. Make sure that you have the SMC report (factory settings). This report comes with the machine.
2. Output the SMC data (☛ SP5-990-001) if possible.
3. Turn off the color controller first and the main switch. Then put a blank formatted SD card into SD card slot 2.
4. Turn on the main switch.

   Note

   - An error message shows if local user information cannot be stored in an SD card because the capacity is not enough.
   - You cannot do this procedure if the SD card is write-protected.
5. Copy the NVRAM data (☛ SP5-824-001) to an SD card if possible.
6. Turn off the color controller first and then the main switch. Then unplug the power cord.

   ☛ page 58 "Correct Procedure to Turn Off the Power "

Removal Procedure for Controller NVRAM

1. Rear lower right cover (☛page 347)

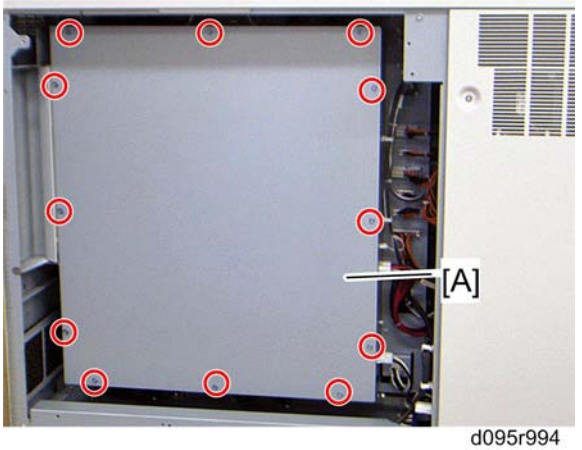

d095r994

2. Controller cover [A] (x 12)

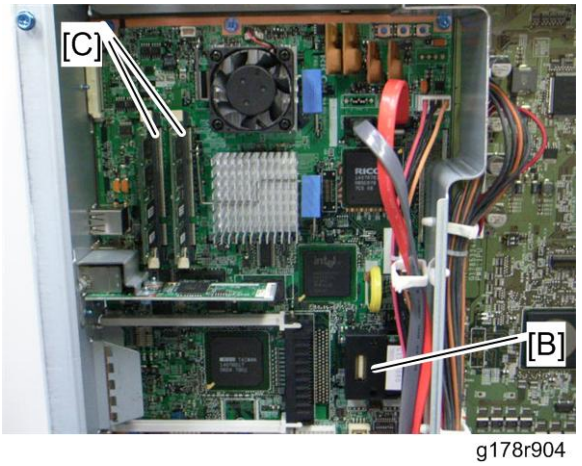

g178r904

3. NVRAM [B] (hooks)
4. DIMMs [C]

After New NVRAM Installation

1. Plug in the power cord. Then turn on the main switch.
2. Check if the serial number shows on the operation panel. (SP5-811-002). Input the serial number if it does not show. (Contact your supervisor about this setting.)
3. Turn off and on the machine.
4. Copy the data from the SD card to the NVRAM (SP5-825-001) if you have successfully copied them to the SD card.

Note

- The counter data in the user code information clears even if step 3 is done correctly.

- An error message shows if the download is incomplete. However, you can still use the part of a data that has already been downloaded in step 3.
- An error message shows when the download data does not exist in the SD card, or, if it is already deleted.

5. Go out of SP mode. Then turn off the color controller and the main switch. Then remove the SD card from SD card slot 2.
6. Turn the main switch on.
7. Specify the SP and UP mode settings.
8. Copy the Paper Library data from an SD card (use SP 5-711-001).
9. Copy the backup of the Saved Paper Library back to the machine from an SD card (use SP 5-711-002)

   .
10. Do the "ACC" procedure only if a new NVRAM is installed in Copier (D095) model.

Controller Board

1. Rear lower right cover (☛page 347)

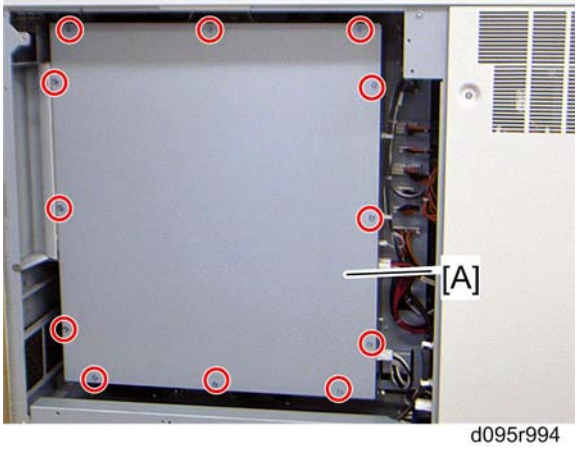

2. Controller cover [A] (x 12)

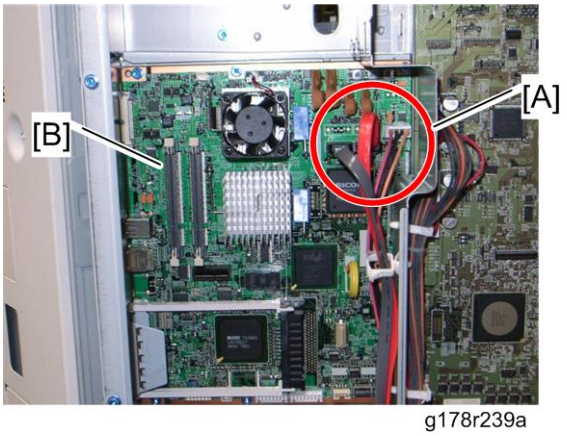

g178r239a

3. Disconnect the three connectors [A] on the controller board [B].

Note

- When you re-connect the three connectors [A], make sure that the black cable is on the left-hand side and the red cables are on the right-hand side.

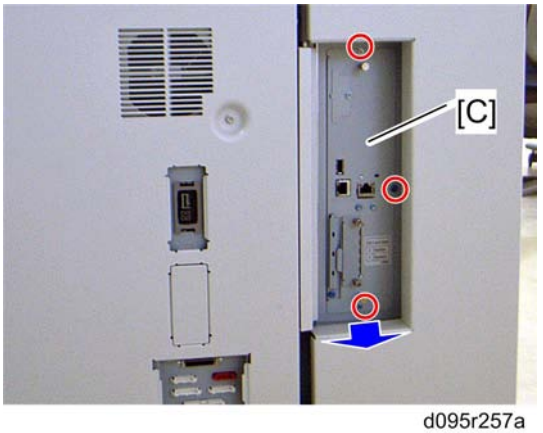

d095r257a

4. Controller unit [C] (x 3)

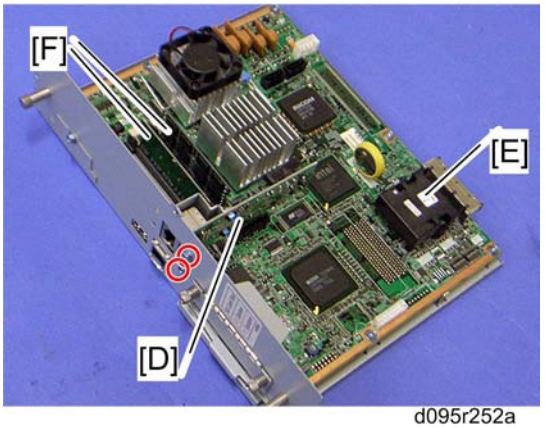

d095r252a

5. Giga Ethernet board [D] (x 2)
6. NVRAM [E] and DIMMs [F]

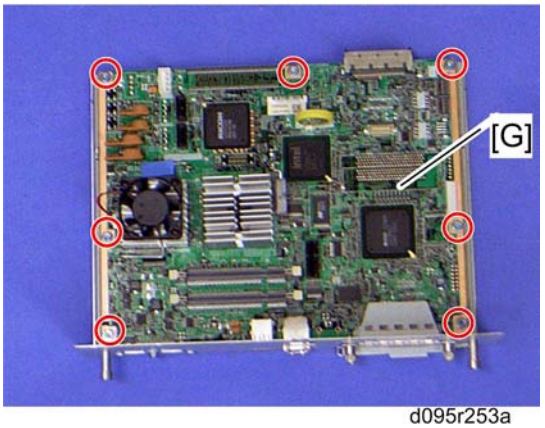

d095r253a

7. Controller board [G]

Note

- When installing a new controller board, be sure to remove the NVRAM from the old board and attach it to the new board.
- If you replace the NVRAM, the DataOverwriteSecurity Unit will not work. A new DOS unit is required for a new NVRAM.
- Also, after you turn the machine on again, even if you do not replace the NVRAM, do the following (the following data is not in the NVRAM):
- 1. Copy the Paper Library data from an SD card (use SP 5-711-001).
- 2. Copy the backup of the Saved Paper Library back to the machine from an SD card (use SP 5-711-002).
- If the NVRAM was damaged, the Custom Paper List will be gone. The customer will have to make this again from the Paper Library data and the backed up Saved Paper Library data.

HDD

Note

- The controller recognizes both disks as one disk unit. Both disks must always be replaced together.

1. Rear lower right cover (☛page 347).
2. Controller cover (☛page 597 "Controller Board")

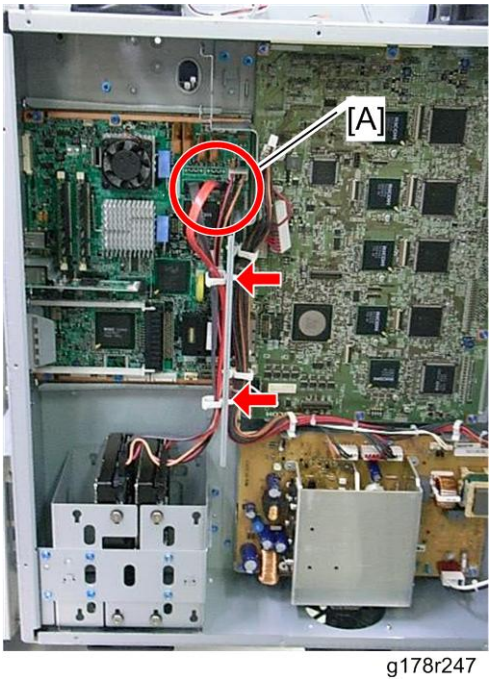

g178r247

3. Disconnect the three connectors [A] (x 2).

Note

- When you re-connect the three connectors [A], make sure that the red flat cable is connected to CN18 and the dark brown flat cable is connected to CN17.

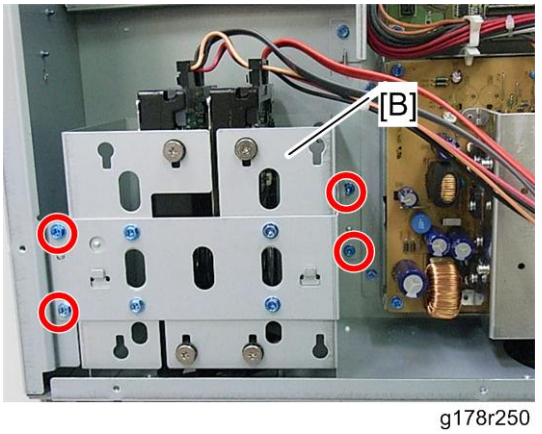

g178r250

4. HDD unit box [B] (x 4)

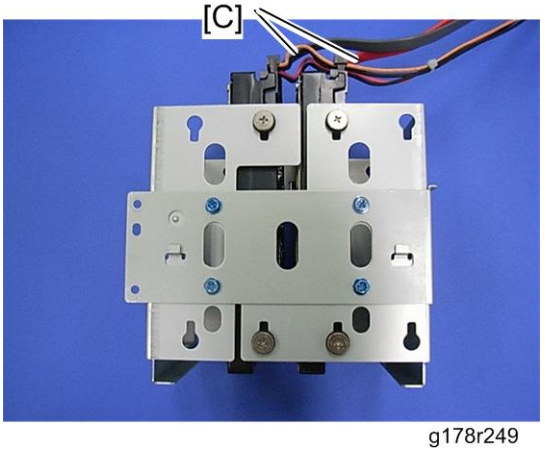

g178r249

5. Disconnect the black and red cables [C].
6. HDD unit box

Important

- If you intend to re-install the same disks in the machine, check how the disks are connected before you disconnect them. They are not identical, and each disk must be connected to the correct connector.

When installing new HDDs

1. Format the HDDs with SP5832-001.
2. The DataOverwriteSecurity unit must be set up again if the customer is using the DOS feature.

Disposal of HDDs

- Never remove an HDD unit from the work site without the consent of the client. If the customer has any concerns about the security of any information on the HDD, the HDD must remain with the customer for disposal or safe keeping.
- The HDD may contain proprietary or classified (Confidential, Secret) information. Specifically, the HDD data stored in temporary files created automatically during job sorting and jam recovery. Such data is stored on the HDD in a special format so it cannot normally be read but can be recovered with illegal methods.

IPU

1. Open the rear controller box (page 354).
2. Controller board (page 597)

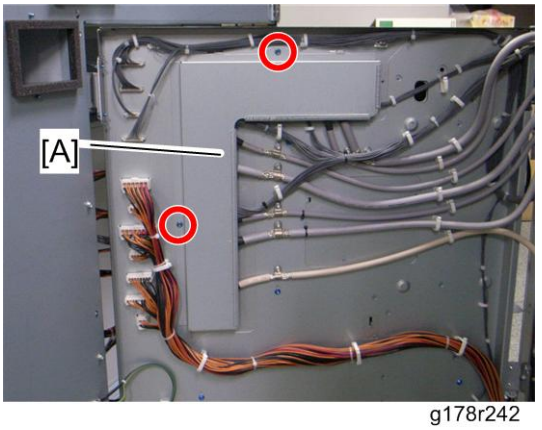

g178r242

3. Connector cover [A] (x 2)

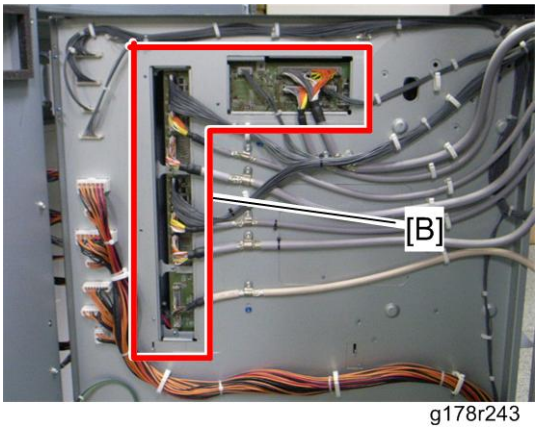

g178r243

4. All connectors [B] on the IPU (x 11)

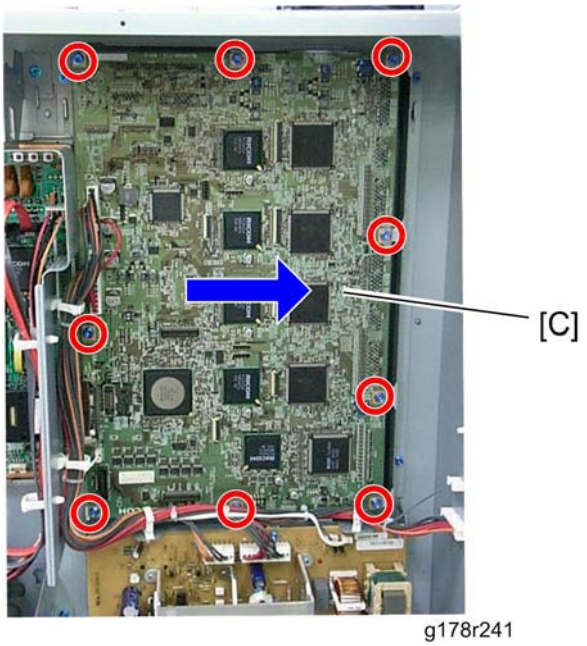

g178r241

5. IPU [C] (x 9, x 3)

PSU-C

1. Open the rear controller box (page 354).

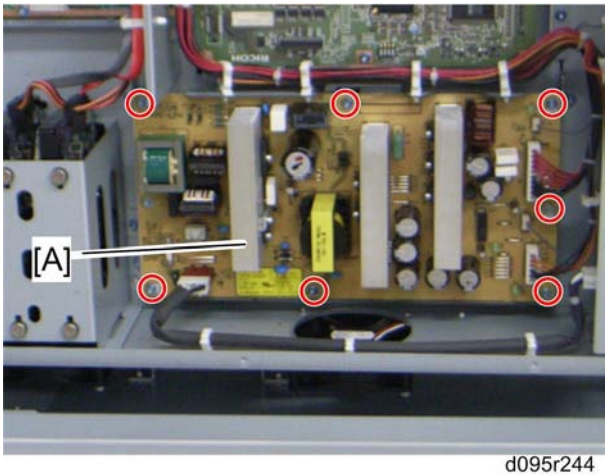

d095r244

2. PSU-C [A] (x 7, x 5)

Controller Fans

Controller Fans 1 and 2

1. Open the rear controller box (page 354).

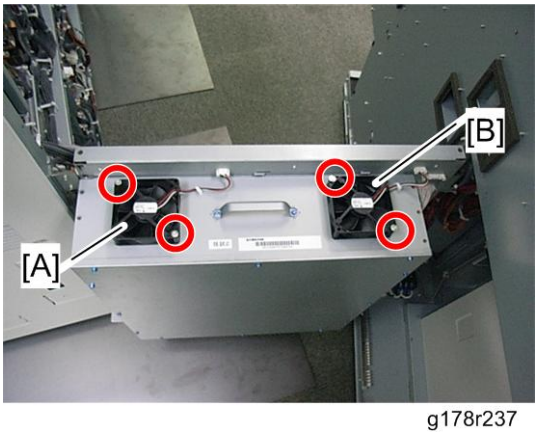

g178r237

2. Controller fan 1 [A] (x 2, x 1)
3. Controller fan 2 [B] (x 2, x 1)

Important

- When you reinstall controller fan 1 and 2, make sure that these fans are installed with their decals facing upward.

Controller Fans 3 and 4

1. Open the rear controller box (page 354).

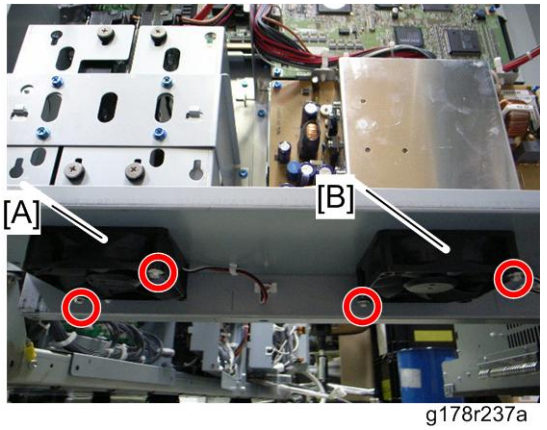

g178r237a

2. Controller fan 3 [A] (x 2, x 1)

3. Controller fan 4 [B] (x 2, x 1)

Important

- **When you reinstall controller fans 3 and 4, make sure that these fans are installed with their decals facing upward.**

PSU-EA1, EA2 and -EB

1. Rear lower left cover (page 347)

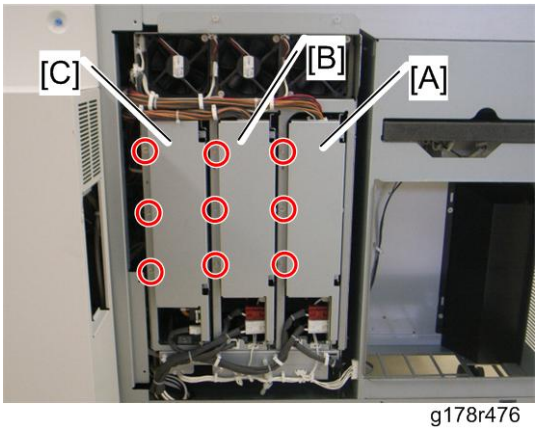

g178r476

2. Remove:
   - [A]: PSU-EA1 bracket (x 3, x all)
   - [B]: PSU-EA2 bracket (x 3, x all)
   - [C]: PSU-EB bracket (x 3, x all)

CAUTION

- Do not pull out the brackets in one motion. Some harnesses and cables do not have slack. Be careful when you pull out each bracket.

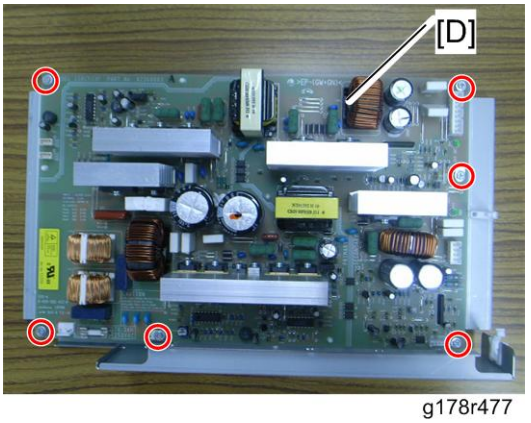

g178r477

3. PSU-EA1, -EA2 or -EB [D] (x 6)

Note

- The removal procedure for each PSU board is identical.

Fiery Controller

⚠CAUTION

- Double Pole/ Neutral Fusing

Important

- Turn off the main power in the following order before servicing. Otherwise, the data on the Fiery controller may be damaged.
- 1. Shut down the Fiery controller first
- 2. And then turn off the main power switch of the main machine. (☛page 58 "Correct Procedure to Turn Off the Power ")

Fiery Controller Left and Right Cover

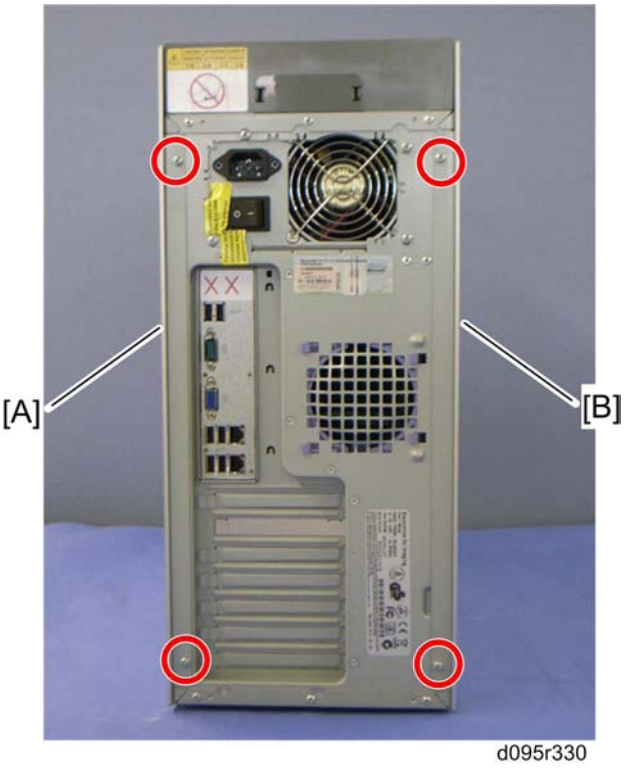

1. Fiery controller right cover [A] (x 2)
2. Fiery controller left cover [B] (x 2)

Fiery Controller Front Cover

1. Fiery controller left and right cover (☛page 607)

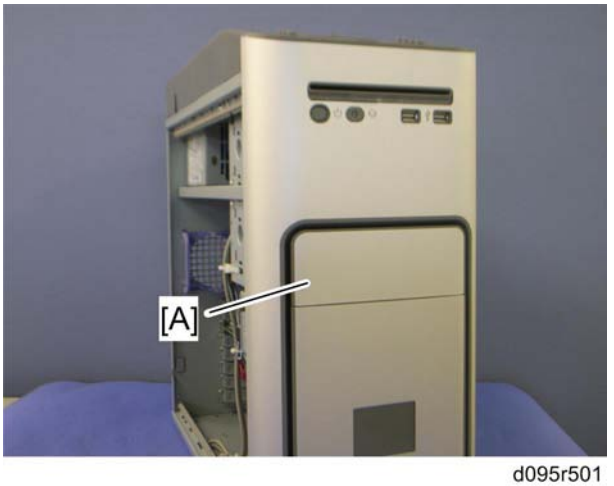

d095r501

2. Front middle cover [A]

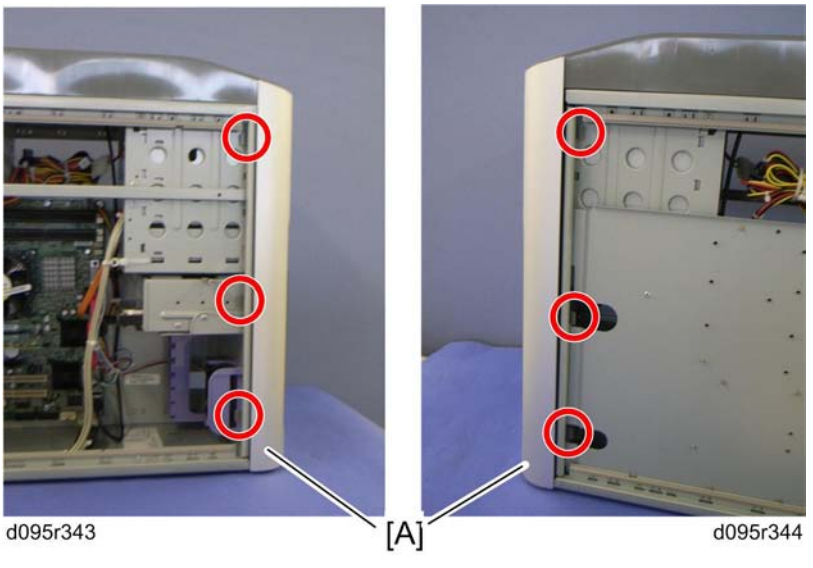

d095r343 d095r344

3. Fiery controller front cover [A] (hook x 6)

Fiery Controller Top Cover and Operation Panel Board

1. Fiery controller front cover (☛page 608)

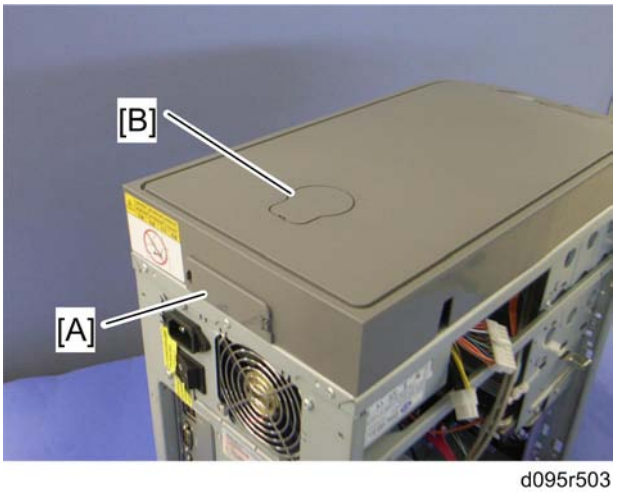

d095r503

2. Remove the cap [A] and the top cover lock cap [B].

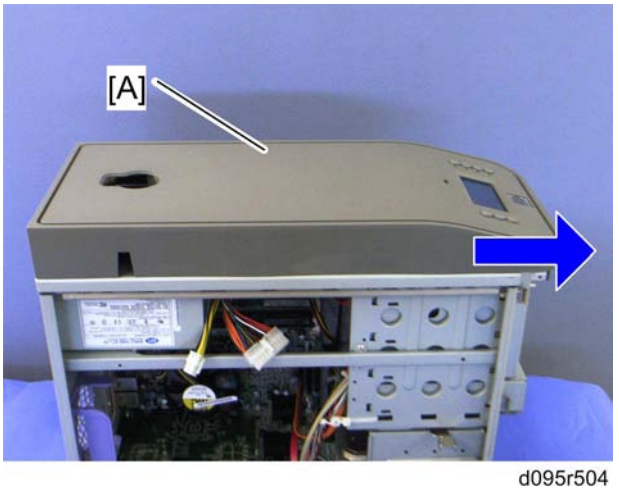

d095r504

3. Fiery controller top cover [A].

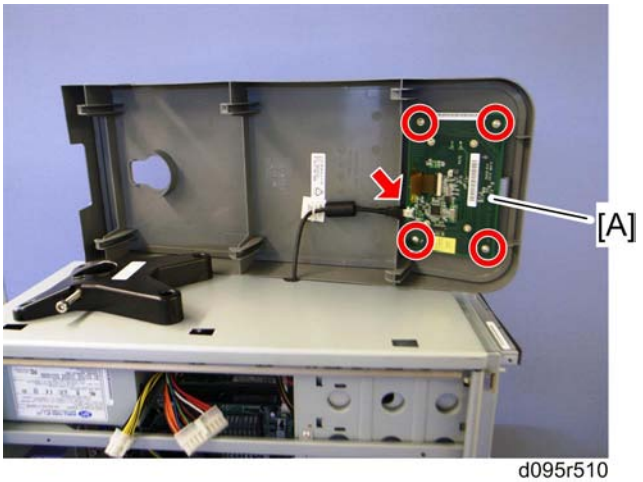

d095r510

4. Operation panel board [A] (x 4, x 1).

Video Board

1. Fiery controller left cover (page 607)

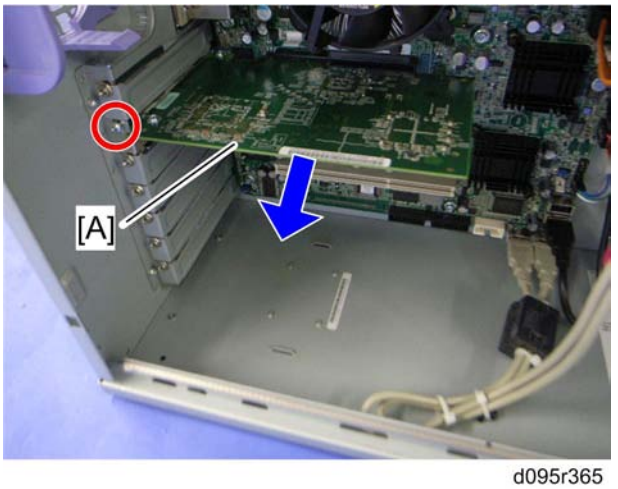

d095r365

2. Video board with bracket [A] (x 1)

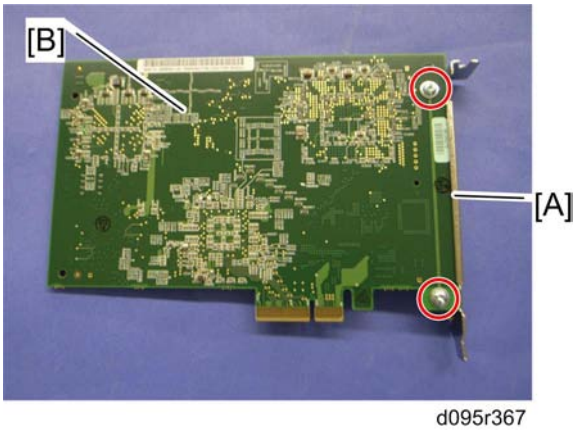

d095r367

3. Video board bracket [A] (x 2)
4. Video board [B]

Fiery Controller Mother Board, DIMM and CPU

1. Video board (page 610)

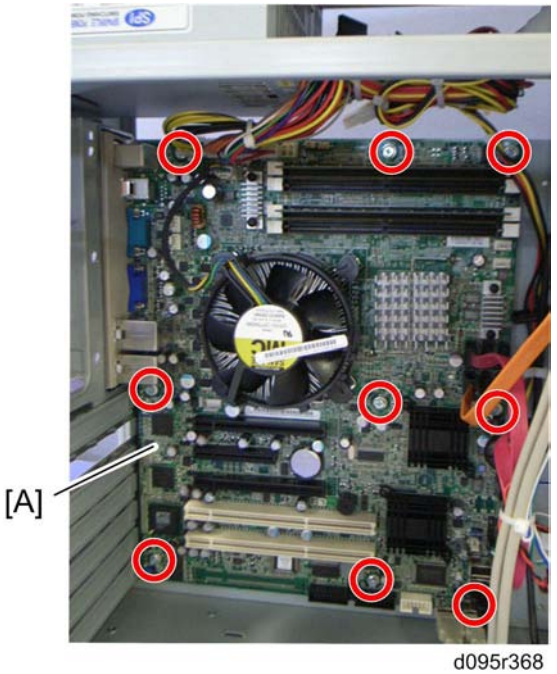

d095r368

2. Disconnect all harnesses on the mother board.
3. Mother board unit [A] (x 9)

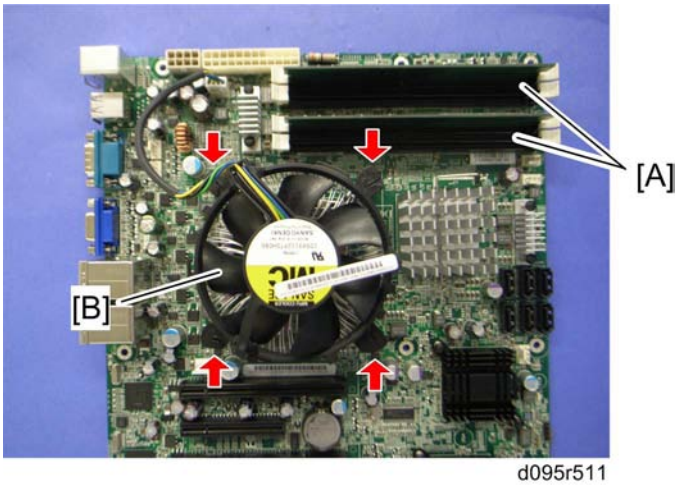

d095r511

4. Two DIMMs [A]
5. CPU fan [B]

Note

- Make sure that four locks (red arrows as shown above) are correctly installed after reinstalling the CPU fan [B]

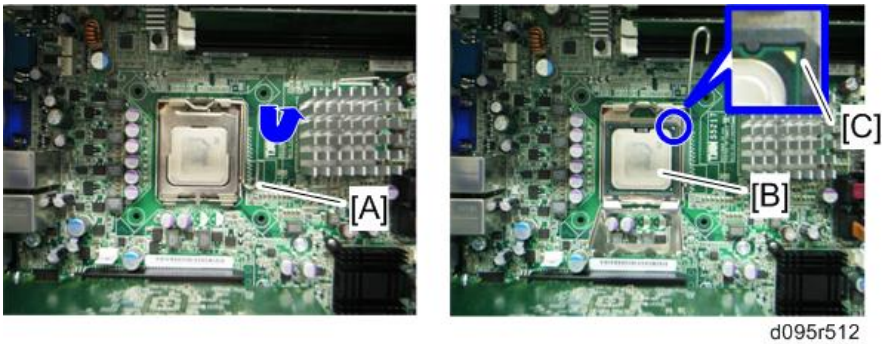

d095r512

6. Release the lock lever [A].
7. CPU [B]

Note

- When you reinstall the CPU [B], make sure that the triangle mark [C] is positioned as shown above.

Important

- **When you replace the DIMM, always replace the pair of DIMMs at the same time.**

When reassembling

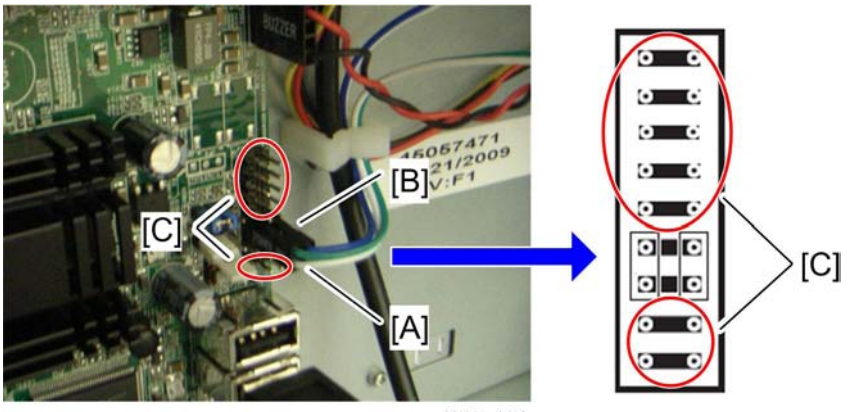

d095r481

Make sure that the 2-pin cable (power switch) and 2-pin cable (reset switch) are correctly connected to JP4 on the mother board.

- The green wire [A] of the 2-pin cable is connected as shown above (the green wire is on the upper side).
- The blue wire [B] of the 2-pin cable is connected as shown above (the blue wire is on the upper side).
- Do not connect any cables to the pins [C] as shown above.

Fiery Controller PSU

1. Fiery controller left and right cover (page 607)
2. Fiery controller top cover (page 608)

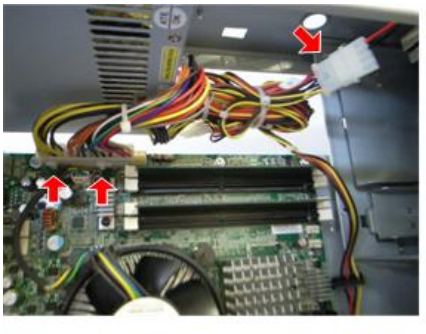

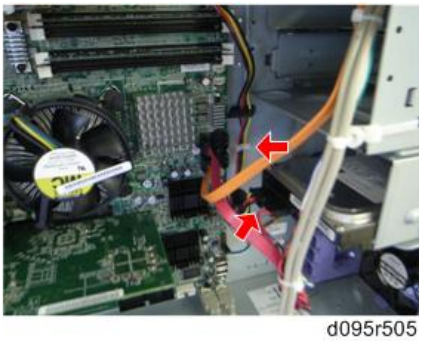

d095r505

3. Disconnect the four connectors (x 1).

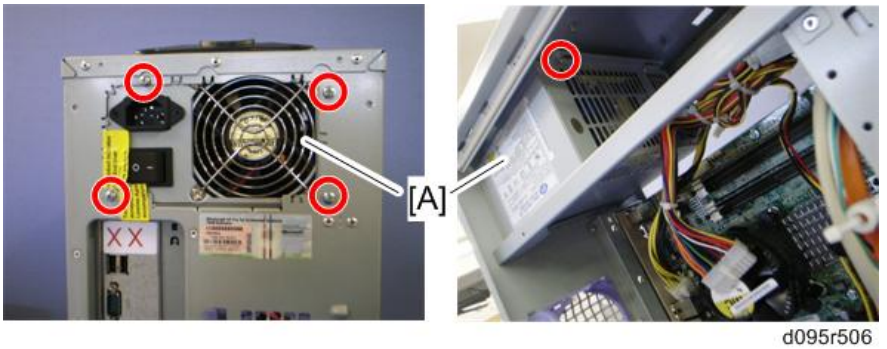

d095r506

4. Fiery controller PSU [A] (x 5)

HDD Unit

1. Fiery controller left and right cover (page 607)
2. Fiery controller front cover (page 608)

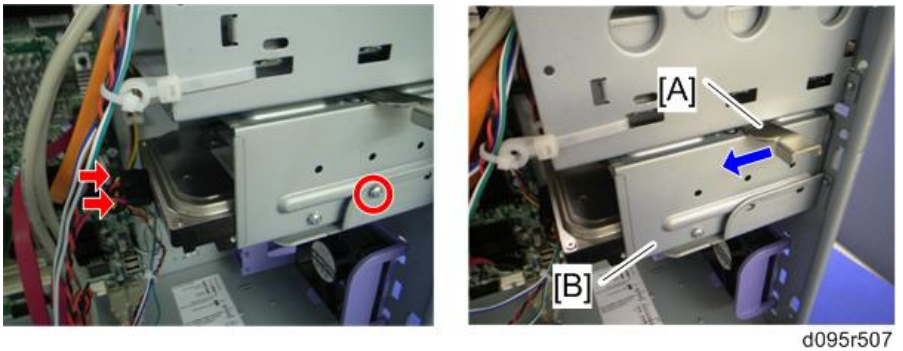

d095r507

3. Disconnect the two connectors and remove the screw.
4. Release the lock lever [A], and then pull out the HDD bracket [B].

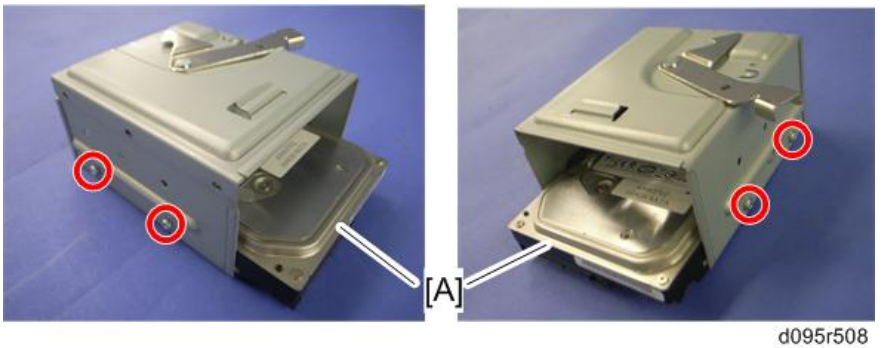

d095r508

5. HDD unit [A] (x 4)

DVD Drive

1. Fiery controller left and right cover (☛page 607)
2. Fiery controller front cover (☛page 608)

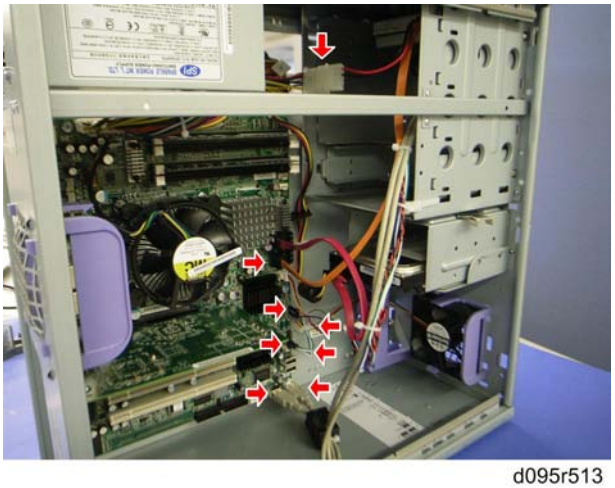

d095r513

3. Disconnect the seven connectors (x 1).

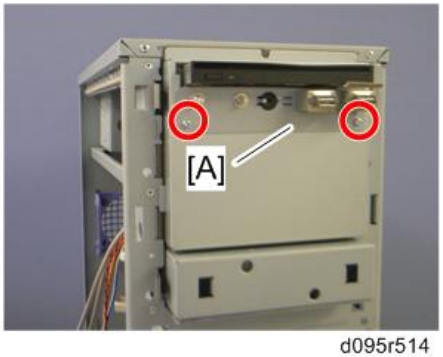

d095r514

4. DVD drive bracket [A] (x 3)

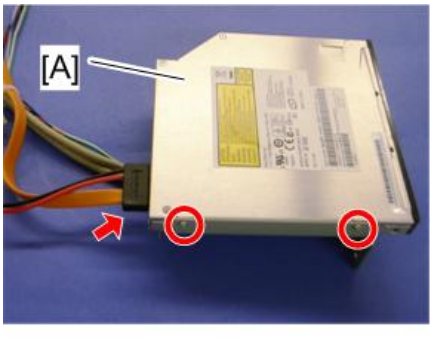

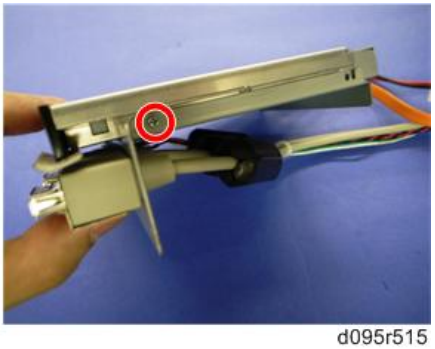

d095r515

5. DVD drive [A] (x 3, x 1)

Fiery Controller Front Fan

1. Fiery controller left cover (page 607)

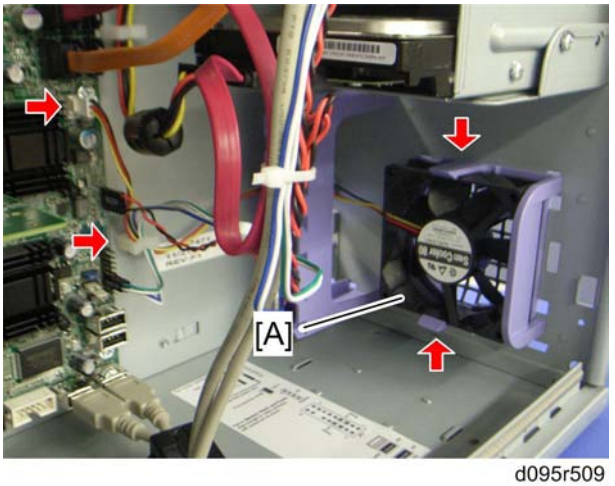

d095r509

2. Fiery controller front fan [A] (x 1, x 1, hook x 2)

Important

- When you reinstall the Fiery controller front fan, make sure that this fan is installed with its decal facing the rear side of the Fiery controller.

Others

Important

- Turn off the main power in the following order before servicing. Otherwise, the data on the Fiery controller may be damaged.
- 1. Shut down the Fiery controller first
- 2. And then turn off the main power switch of the main machine. (page 58 "Correct Procedure to Turn Off the Power ")

Dust Filters

Note

- The removal procedure for all dust filters (K, C, M, Y) are identical. In this procedure, the removal procedure for the dust filter-Y is described.

1. Rear upper cover (page 347)

d095r906

2. Dust filter cover [A] (hooks)

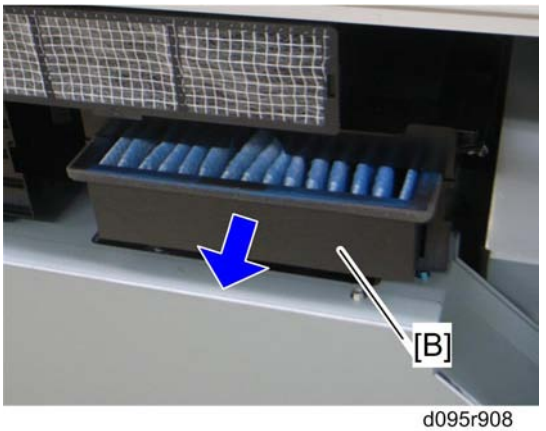

d095r908

3. Dust filter [B]

After installing a new dust filter

Clear the PM counter for the dust filter. See "PM Parts Screen Details" in the chapter "Preventive Maintenance".

Development Filter

Note

- The removal procedures for all dust filters (K, C, M, Y) are identical. In this procedure, the removal procedure for the dust filter-Y is described.

1. Rear upper cover (page 347)

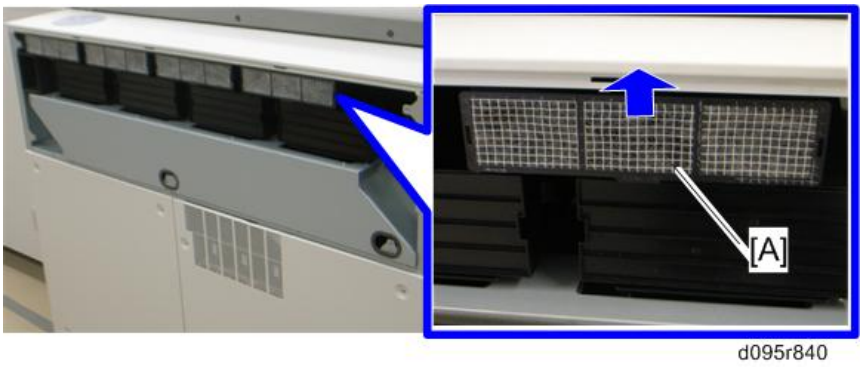

2. Development filter [A]

Cleaning Requirement

This filter must be cleaned at 400 K intervals. Clean this filter with a vacuum cleaner.

PSU Filter

1. Open the rear controller box (page 354).

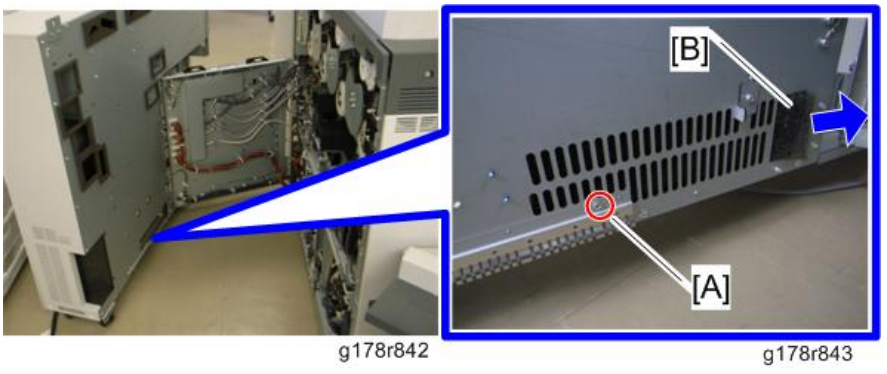

2. Remove the screw [A].
3. PSU filter [B]

Cleaning Requirement

This filter must be cleaned at 400 K intervals. Clean this filter with a vacuum cleaner.

Controller Filter

1. Open the rear controller box (☛page 354).

2. Controller filter [A]

Cleaning Requirement

This filter must be cleaned at 400 K intervals. Clean this filter with a vacuum cleaner.

Ozone Filters

Note

- There are two sizes of ozone filters in this machine. Replace both at every PM interval.

1. Rear lower left cover (☛page 347)

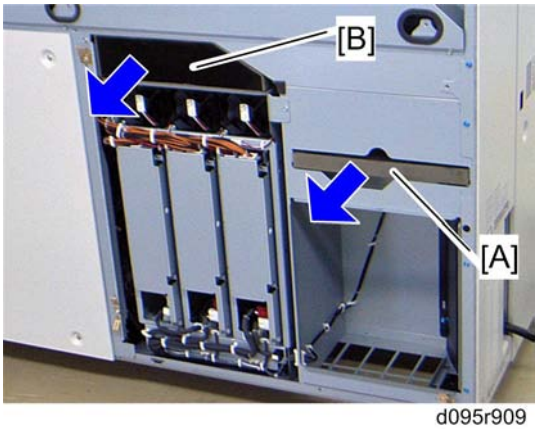

d095r909

2. Ozone filter (Large) [A]
1. Ozone filter (Medium) [B]

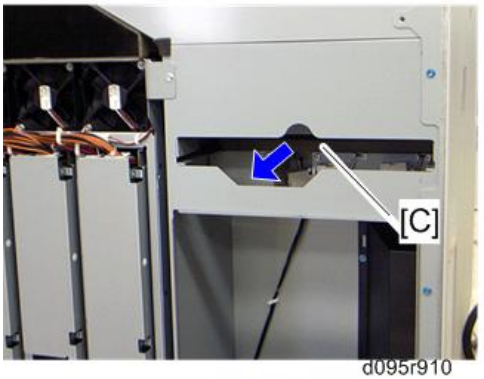

d095r910

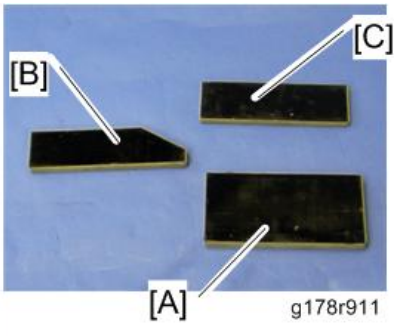

g178r911

2. Ozone filter (Small) [C]

After installing new ozone filters

Clear the PM counter for the ozone filters. See "PM Parts Screen Details" in the chapter "Preventive Maintenance".

Document Feeder (D095 only)

ADF Unit

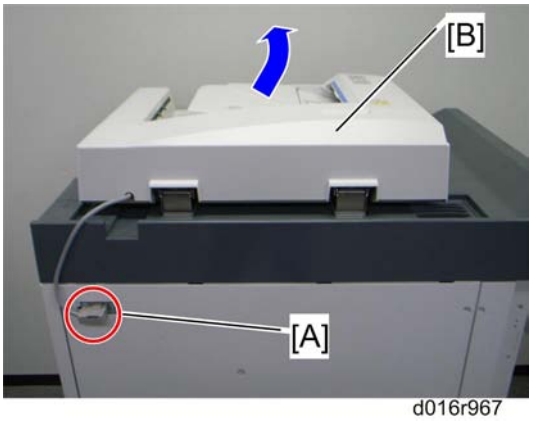

1. Disconnect the I/F cable of the ADF.
2. Open the ADF [B].

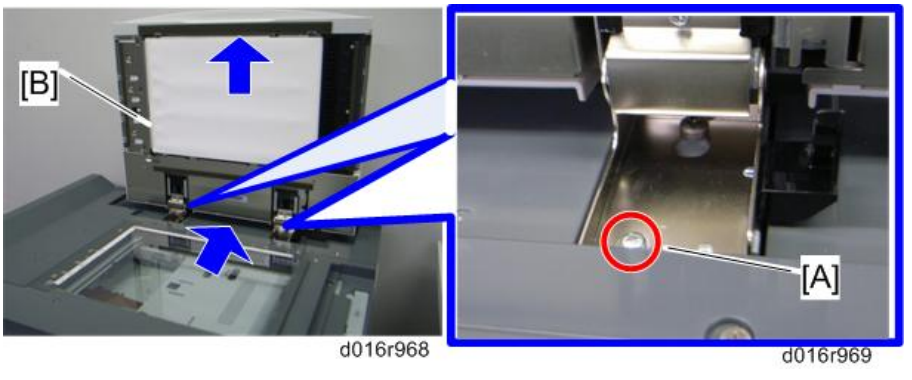

3. Remove the screws [A] from both hinges.
4. Hold both sides of the ADF unit [B].
5. Slide the ADF unit [B] to the rear side, and then lift it.

ADF Covers

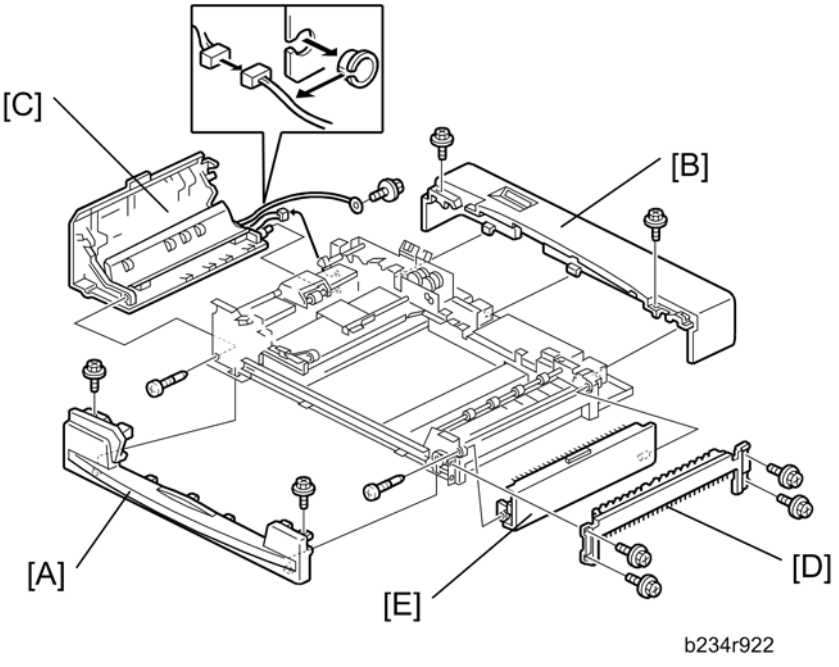

1. Front cover [A] (x 2)
2. Rear cover [B] (x 2)
3. Left cover [C] (x 2, x 2)
4. Original exit tray (page 637 "Optics Dust Filter")
5. Right cover [D] (x 4, x 2)
6. Upper exit cover [E] (x 1)

ADF Original Tray

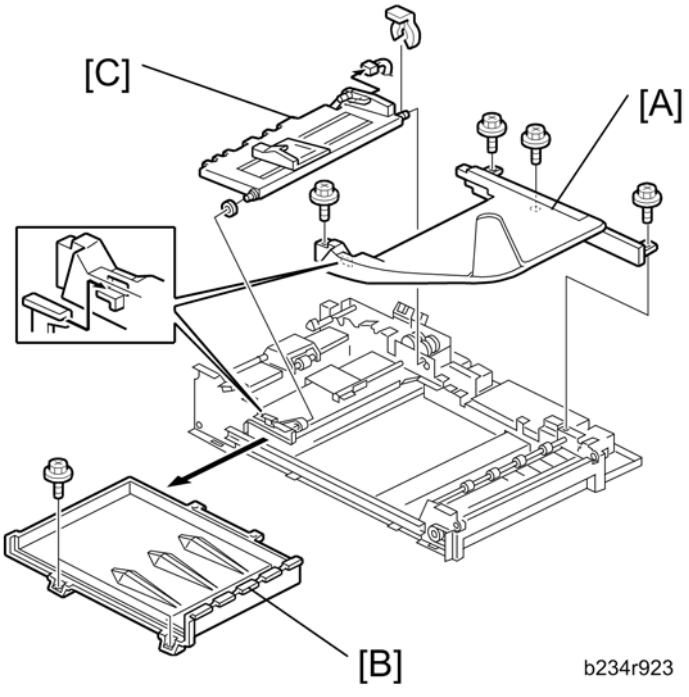

Original Tray

1. Remove the ADF front and rear covers. (page 622 "ADF Covers")
2. Original tray [A] (x 4)

Original Table Cover

1. Remove the ADF front and rear covers. (page 622 "ADF Covers")
2. Remove the original tray [A].
3. Original table cover [B] (x 2)

Bottom Plate

1. Remove the ADF front and rear covers. (page 622 "ADF Covers")
2. Remove the original tray [A].
3. Bottom plate [C] (x 1, x 1)

Feed Unit and Separation Roller

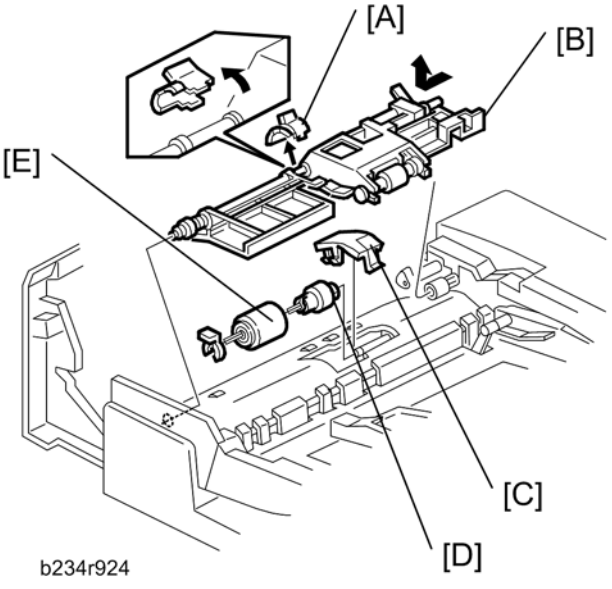

1. Open the left cover.
2. Clip [A]
3. Remove the feed unit [B]. Pull the feed unit to the front, release the shaft at the rear, and release the front bushing.
4. Separation roller cover [C]
5. Torque limiter [D] and separation roller [E] (x 1)

Feed Belt

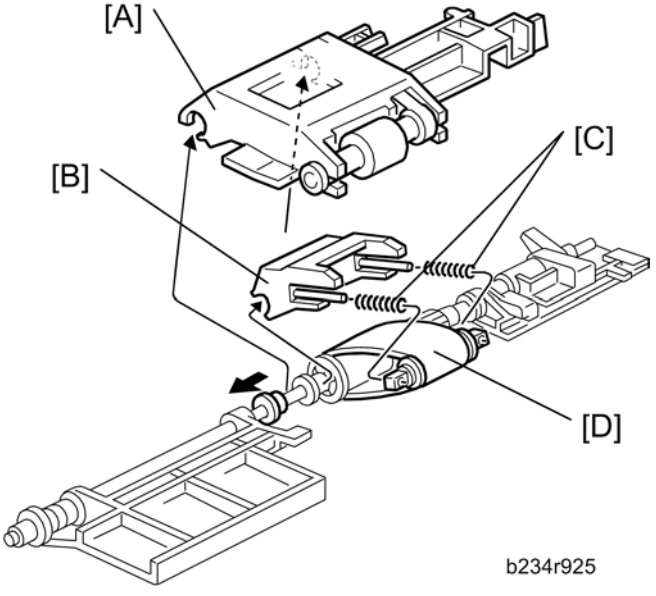

1. Feed unit (page 624)
2. Pick-up roller unit [A]
3. Feed belt holder [B]

   Note

   - The springs [C] come off the feed belt cover easily.

4. Feed belt [D]

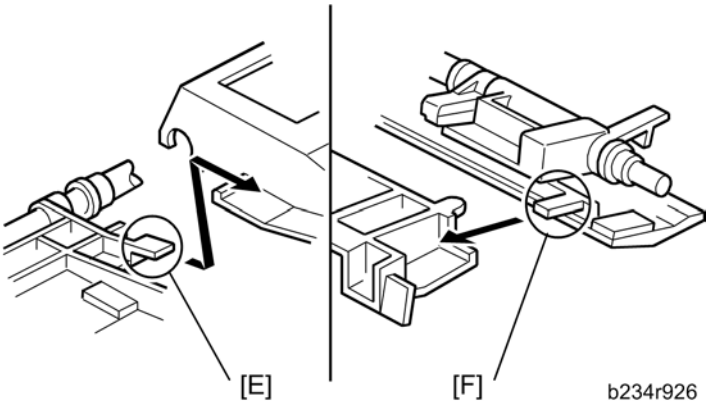

Note

- When reinstalling the pick-up roller unit, make sure that levers [E] and [F] on the front and rear original guides are resting on the pick-up roller unit cover.

Pick-Up Roller

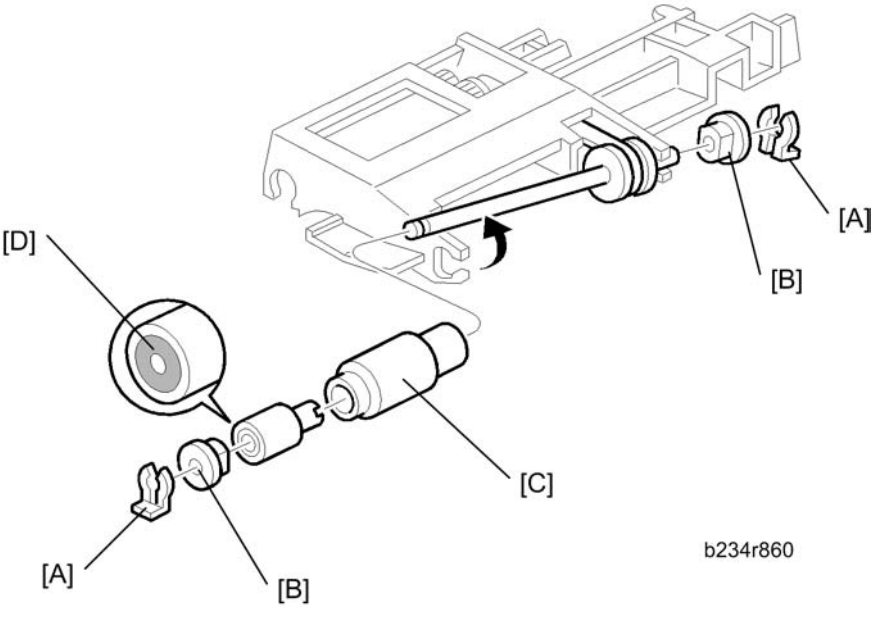

1. Open the left cover.
2. Feed unit (page 624)
3. Snap rings [A] (x 2)
4. Two bushings [B]
5. Pick-up roller [C]

Note

- When reinstalling the pick-up roller, make sure that the one-way clutch [D] is not on the gear side.

ADF Sensors

Entrance Sensor and Length Sensor

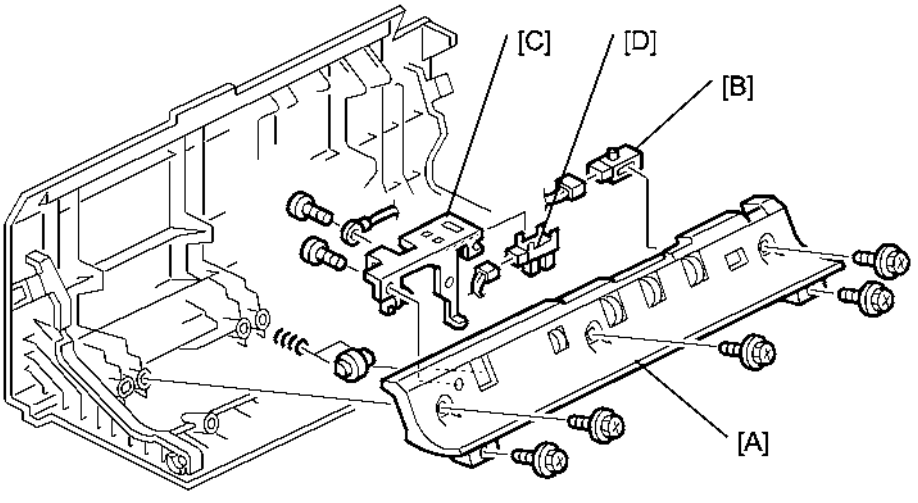

1. ADF left cover (page 622 "ADF Covers")
2. Guide plate [A] (x 5)
3. Entrance sensor [B] (x 1)
4. Length sensor bracket [C] (x 2)
5. Length sensor [D] (x 1)

Registration Sensor

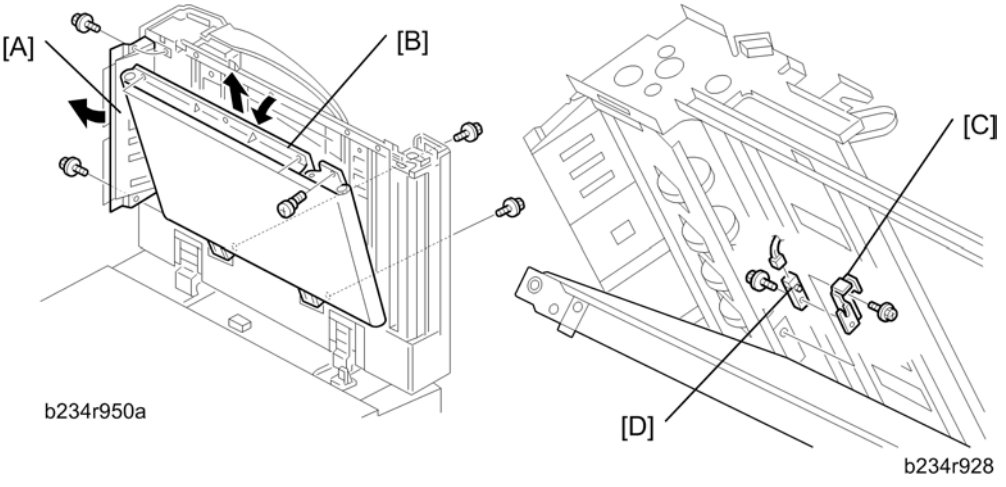

1. ADF front cover (page 622 "ADF Covers")
2. ADF left cover (page 622 "ADF Covers")
3. Release the entrance guide [A] (x 2).
4. Release the transport belt unit [B] (x 3).
5. Sensor bracket [C] (x 1)
6. Registration sensor [D] (x 1, x 1)

Width Sensors

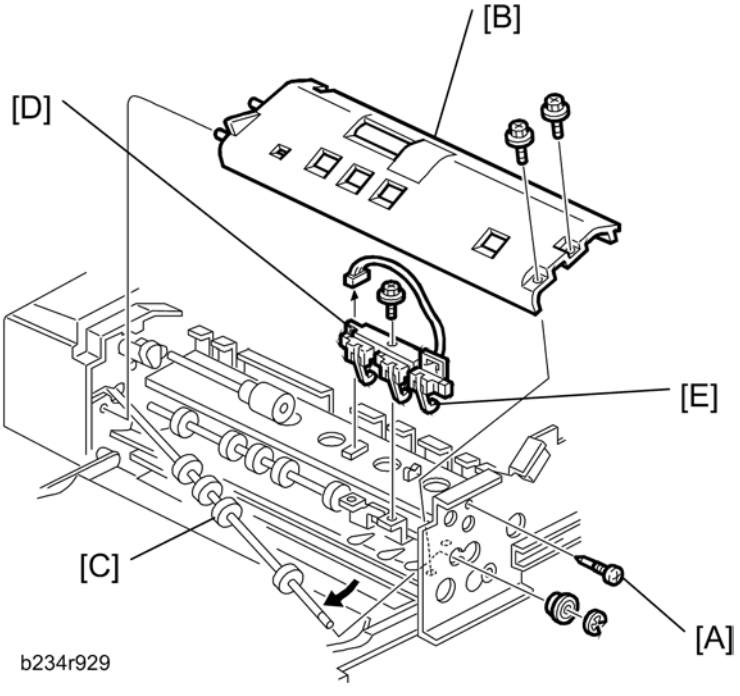

1. ADF front cover (☛page 622 "ADF Covers")
2. Feed unit (☛page 624)
3. Stopper screw [A]
4. Guide plate [B] (x 2)
5. Release the front end of the upper transport roller [C] (bushing x 1, x 1).
6. Sensor bracket [D] (x 1)
7. Width sensors [E] (x 1 each)

Exit Sensor, Inverter Sensor

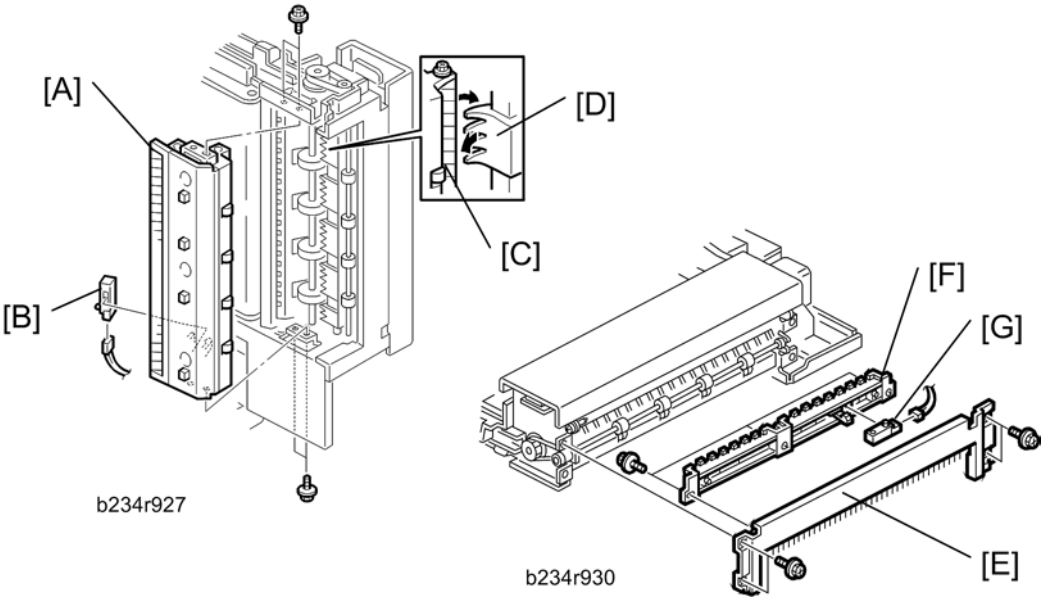

1. Front and rear covers (page 622 "ADF Covers")
2. Original tray (page 623)
3. Exit guide unit [A] (x 5, x 1)
4. Exit sensor [B] (x 1)

   Note

   - When reinstalling the exit guide unit, make sure that the guide plate [C] on the exit unit is over the exit gate [D].
5. Right cover [E] (page 622 "ADF Covers")
6. Guide plate [F] (x 3)
7. Inverter sensor [G] (x 1)

Transport Belt

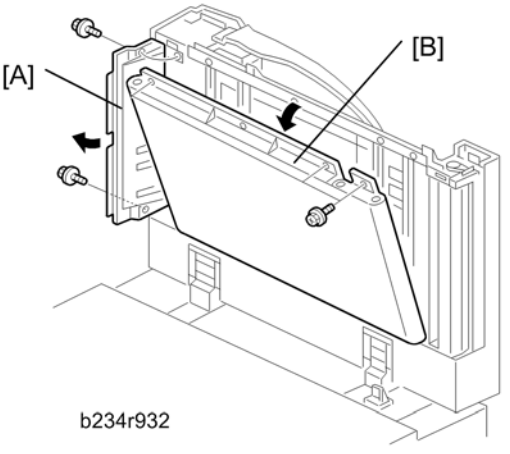

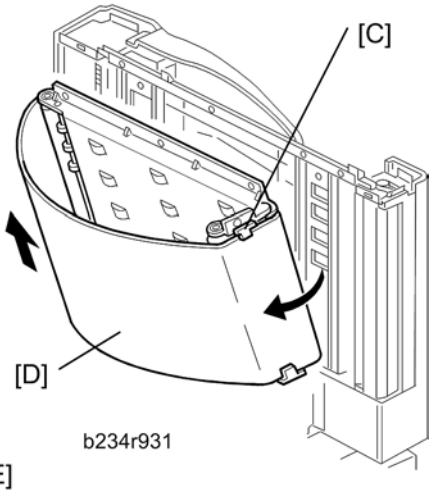

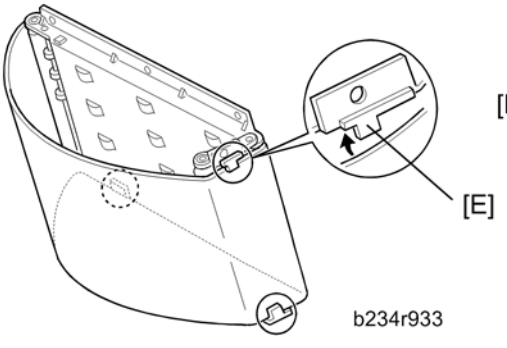

1. Front cover (page 622 "ADF Covers")
2. Release the entrance guide [A] (x 2).
3. Release the transport belt unit [B] (x 3).
4. Fold the transport belt assembly extension [C].
5. Transport belt [D]

   Note

   - When installing the transport belt, make sure that the belt passes under the upper and lower belt guide spacers [E].
6. Execute SP6009 (DF Free Run) to do an ADF free run for 3 minutes. After the free run is finished, clean off any dust on the exposure glass.

ADF Motors

Bottom Plate Motor, Pick-up Motor

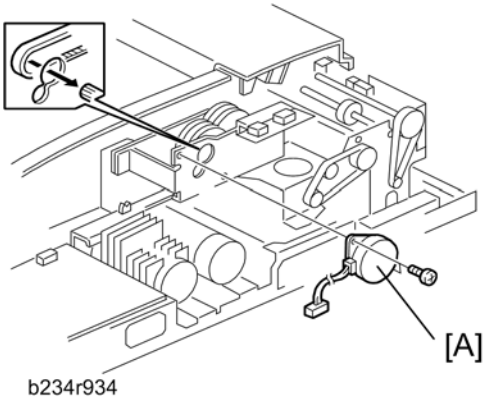

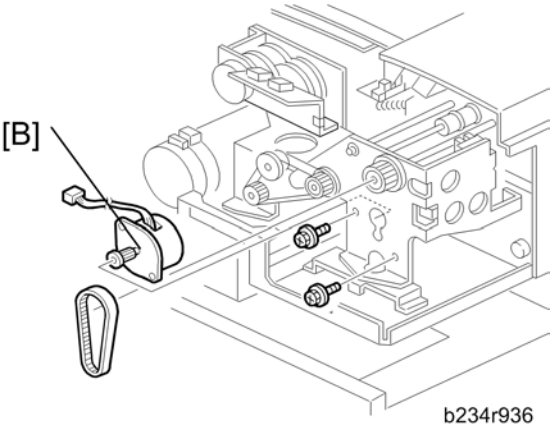

1. Rear cover (page 622 "ADF Covers")
2. Bottom plate motor [A] (x 2, x 1)
3. Pick-up motor [B] (x 2, x 1)

Feed-in, Transport, Feed-out Motors

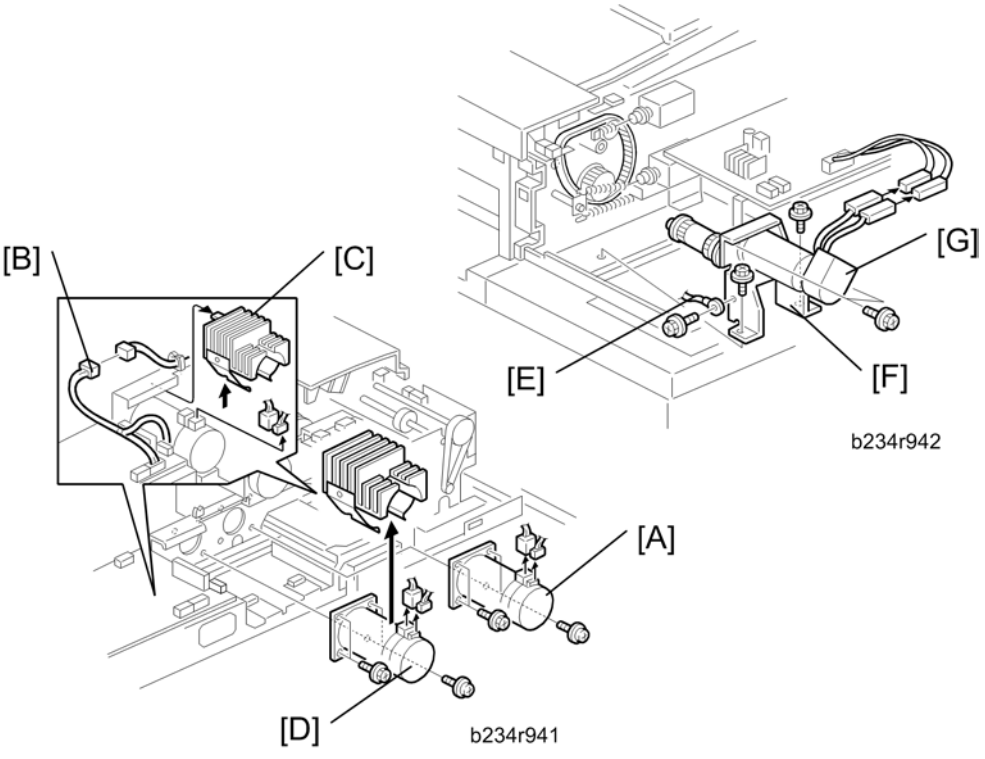

1. Rear cover (☛page 622 "ADF Covers")
2. Feed-in motor [A] (x 4, x 2)
3. Connector [B]
4. Fins [C]
5. Transport motor [D] (x 4, x 2).
6. Grounding wire [E] (x 1).
7. Feed-out motor assembly [F] (x 2, x 2).
8. Feed-out motor [G] (x 2).

Feed-In Clutch

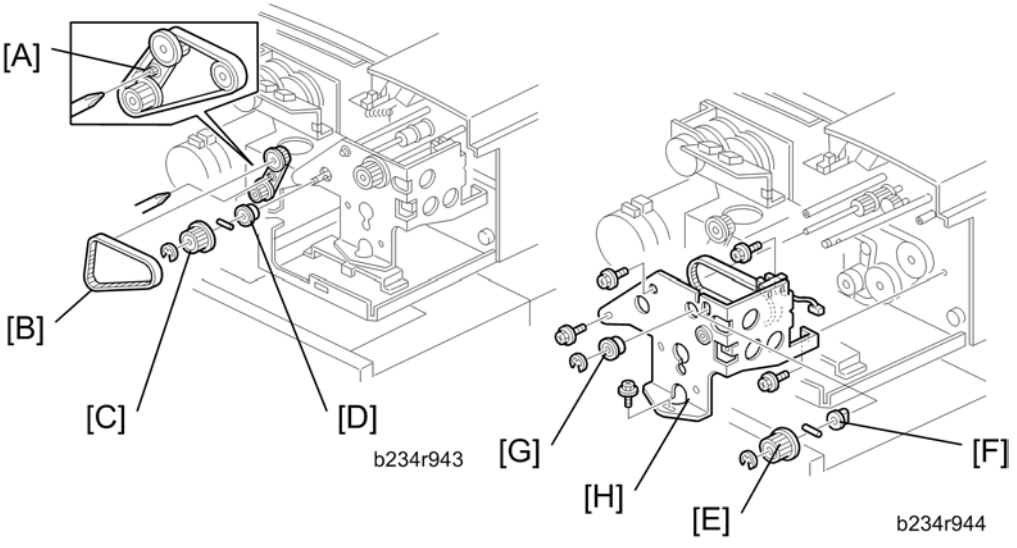

1. Rear cover (☛page 622 "ADF Covers")
2. Remove screw [A].
3. Timing belt [B]
4. Pulley [C] and bearing [D] from the feed-in drive shaft (ℭ x 1, pin x 1)
5. Pulley [E] and bushing [F] from the pick-up roller cam shaft (ℭ x 1, pin x 1)
6. Bearings [G] from the feed belt drive shaft (ℭ x 1)
7. Feed-in clutch assembly [H] (x 5, x 1)

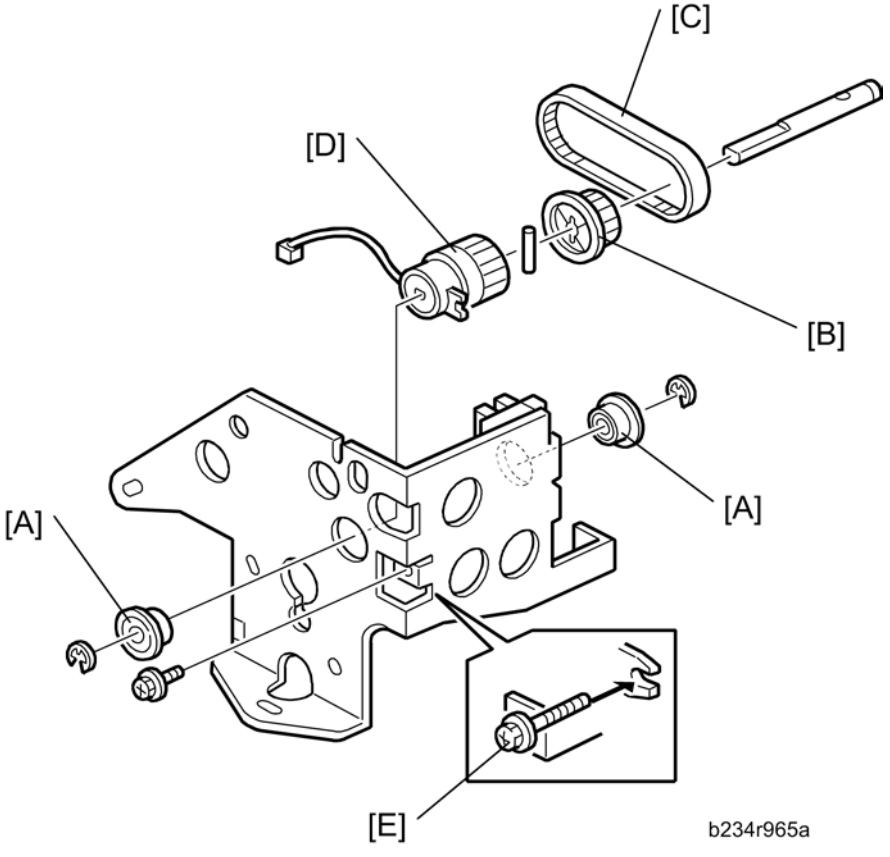

8. Two bearings [A] from the feed-in clutch shaft (☡ x 1 each)
9. Pulley [B] (☡ x 1), pin and timing belt [C]
10. Feed-in clutch [D]

Note

- When re-installing the feed-in clutch, put the stopper screw [E] in the clutch hook.

Scanner Unit (D095 only)

Exposure Glass

1. Open the ADF unit.

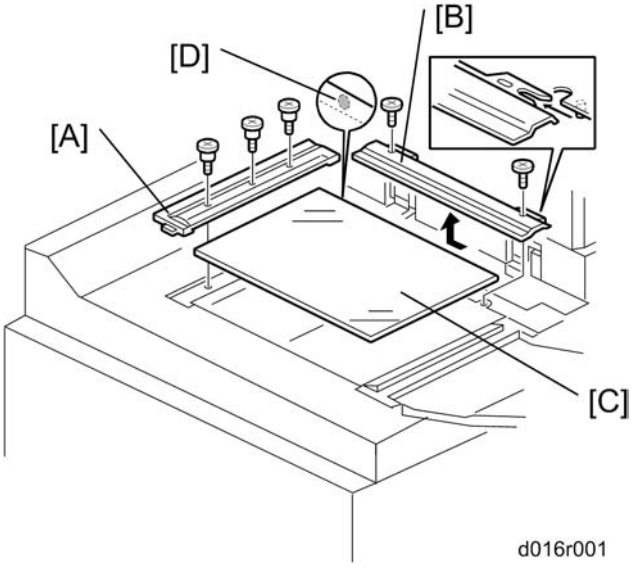

2. Left scale [A] (x 3)
3. Rear scale [B] (x 2). Slide in the direction of the arrow to remove.
4. Exposure glass [C]

Note

- When positioning the exposure glass for re-installation, make sure that the white dot [D] is at the rear left corner.

Optics Dust Filter

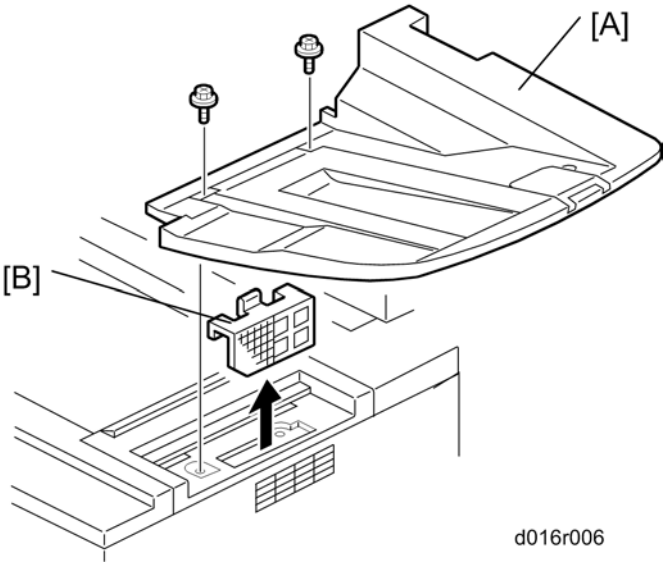

1. Original exit tray [A] (x 2)
2. Optics dust filter [B]

Top Front Cover

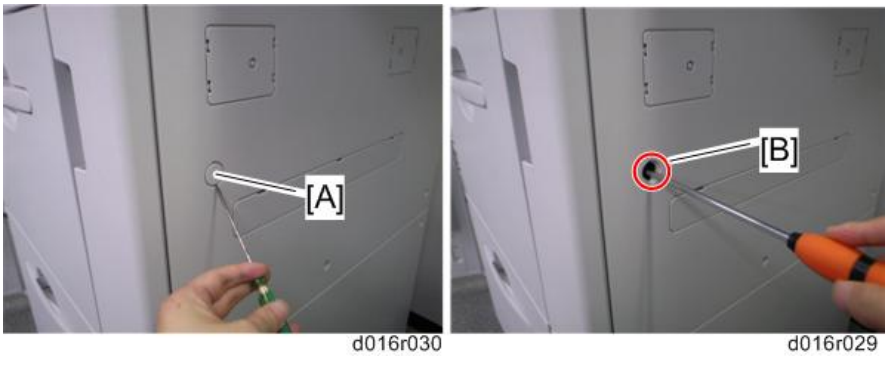

1. Remove the screw cap [A] on the right upper cover of the LCT-MF.
2. Remove the screw [B] to open the front right door.

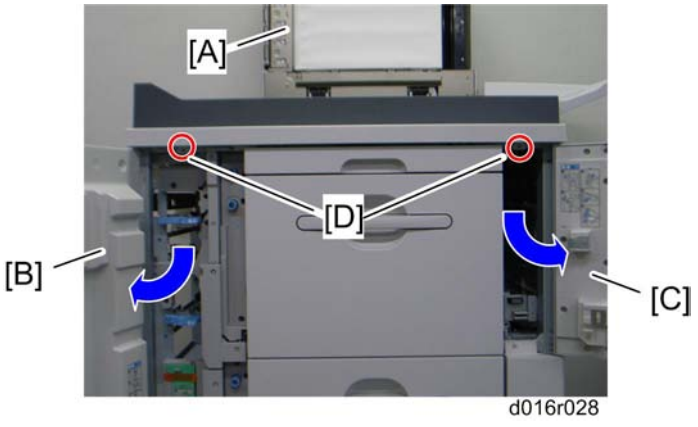

3. Open the ADF [A], front left [B] and front right door [C].
4. Remove two screws [D] under the top front cover.

5. Remove the screw covers [A] [B].
6. Top front cover [C] (x 4)

Top Left Cover

1. Top front cover (page 637)

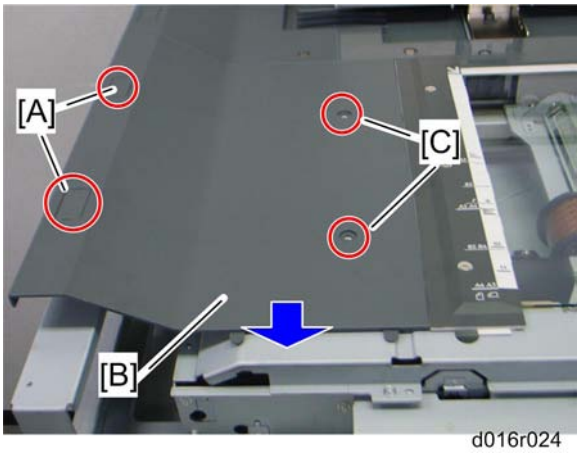

2. Remove the screw covers [A].
3. Top left cover [B] (step screw [C] x 2, x 2)

Top Right Cover

1. Original exit tray (page 637 "Optics Dust Filter")

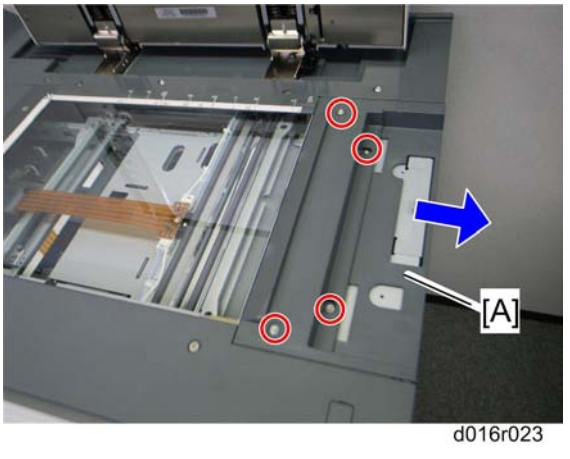

2. Top right cover [A] (x 4)

Top Rear Cover

1. Remove the ADF unit (page 621)

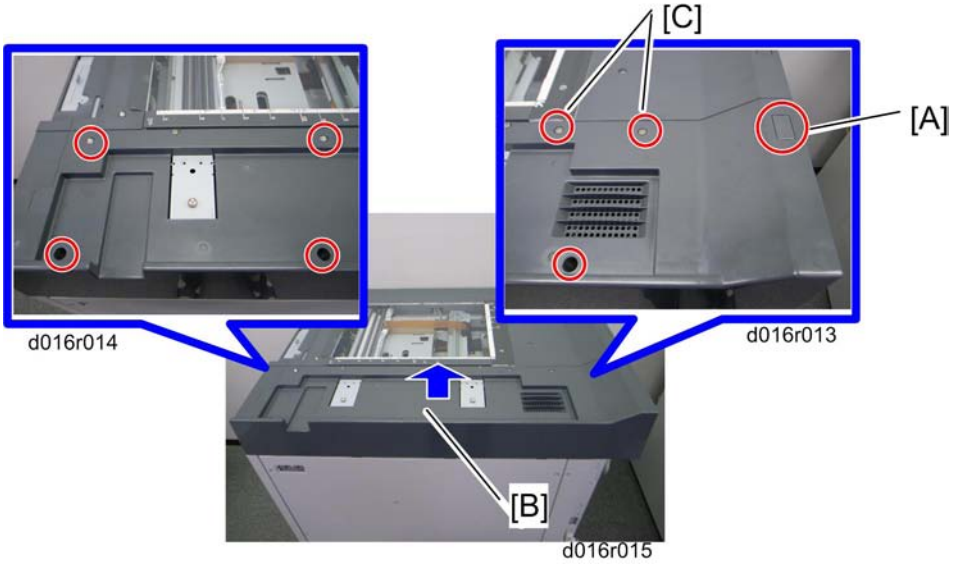

2. Remove the screw core [A].
3. Top rear cover [B] (x 6, step screw [C] x 2)

Lens Block

⚠ WARNING

- Turn off the main power switch and unplug the machine before performing this procedure. Laser beams can seriously damage the eyes.

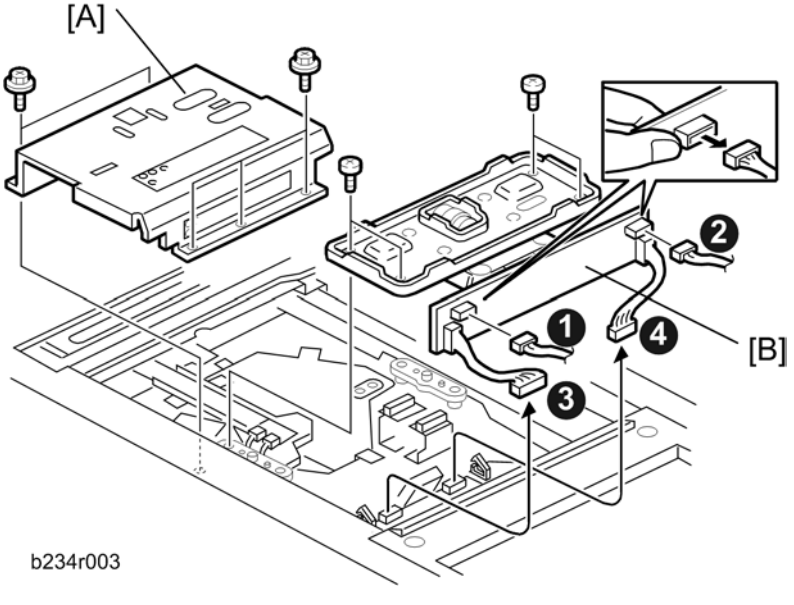

1. Exposure glass (page 636)
2. Lens cover [A] (x 5)
3. Lens block [B] (x 4, x2, x 4)
   - Hold the board to disconnect connectors ❶, ❷. (They are difficult to disconnect if you do not hold the board.)
   - Disconnect the connectors ❸, ❹ from the relay board, then remove the lens block.
4. After reassembly, do the scanner and printer copy adjustments. (page 330)

Note

- There are no field adjustments for the lens block.

Original Size Sensors

CAUTION

- Turn off the main switch and unplug the machine before performing this procedure. Laser beams can seriously damage the eyes.

1. Exposure glass (page 636)
2. Lens block (page 640)

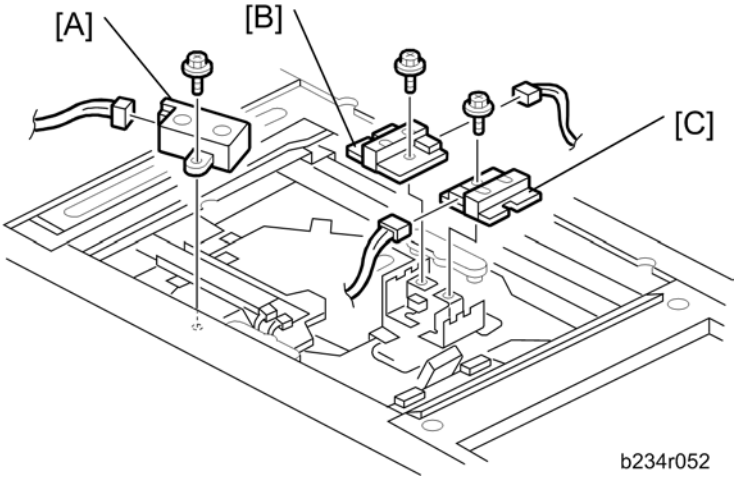

3. Original width sensor [A] (x 1, x 1)
4. Original length sensor 1 [B] (x 1, x 1)
5. Original length sensor 2 [C] (x 1, x 1).
6. After re-assembly, do the scanner and printer copy adjustments. (Copy Image Adjustment: Printing/Scanning)

Exposure Lamps

1. Exposure glass (☛page 636)
2. Open the front door, then remove the front upper cover (☛page 644 "Scanner Motor").

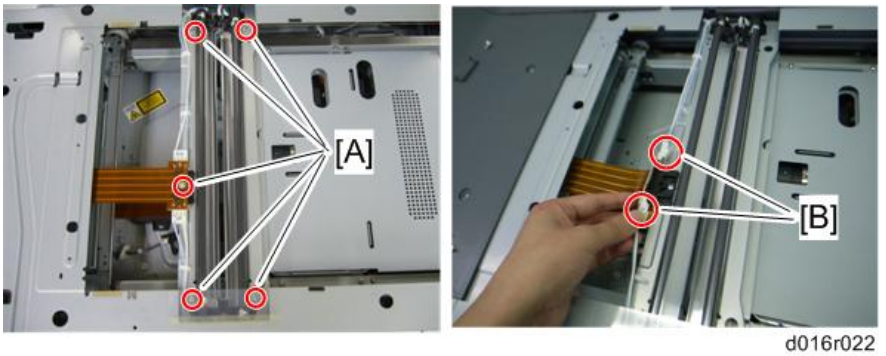

d016r022

3. Remove five screws [A] on the exposure lamp unit.
4. Disconnect two connectors [B].

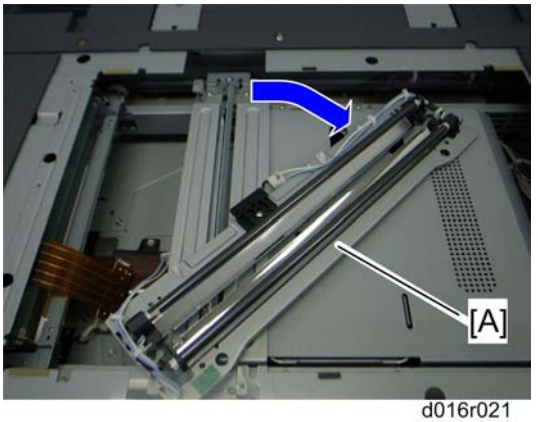

d016r021

5. Rotate the exposure lamp unit [A] clockwise, and then remove it.

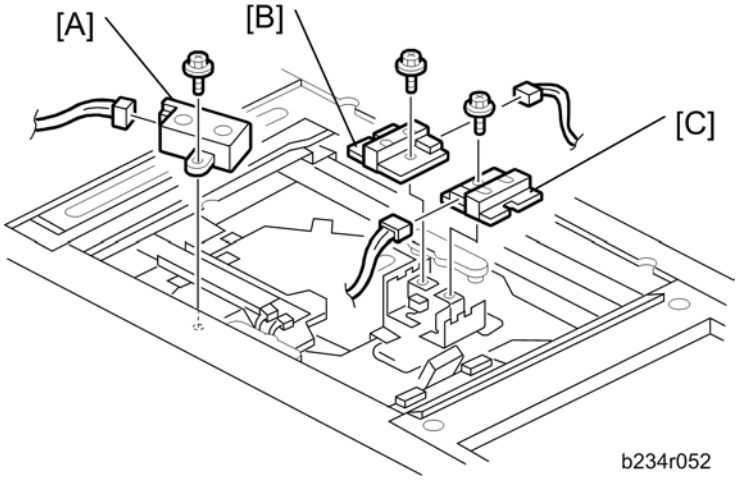

6. 1st exposure lamp [A] (x 2, x 1, x4)
7. 2nd exposure lamp [B] (x 2, x 1, x3)
8. Exposure lamps [C] (x 1)

Lamp Regulators

1. Exposure glass (page 636)
2. Top front cover (page 637)

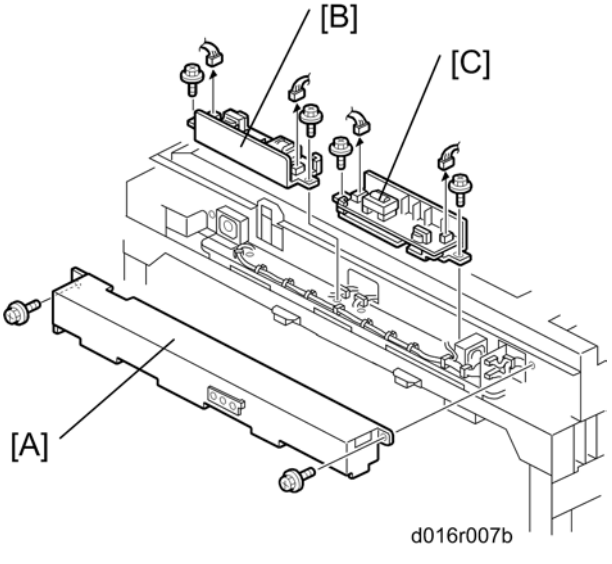

3. Remove:

   [A]: Lamp regulator cover (x 2)

[B]: Left lamp regulator (x 2, x 2)

[C]: Right lamp regulator (x 2, x 2)

Scanner HP Sensor

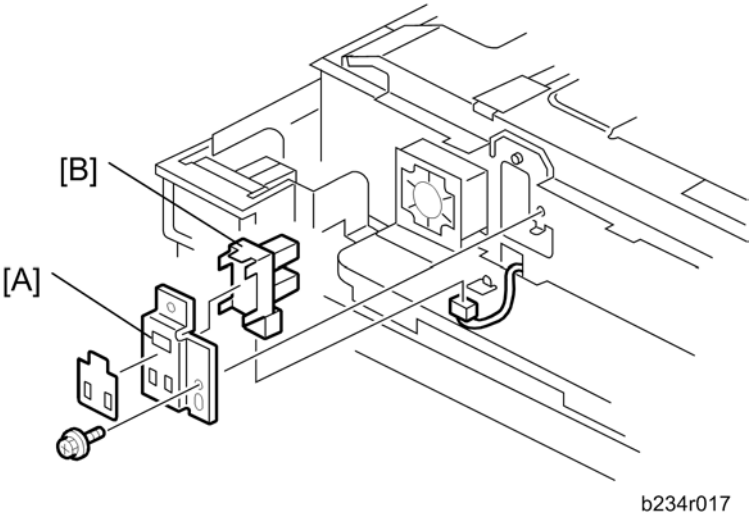

1. Front upper cover (page 644 "Scanner Motor")
2. Left lamp regulator (page 643)
3. Scanner HP sensor bracket [A] (x 1)
4. Scanner HP sensor [B] (x 1, Pawls x4)

Scanner Motor

1. Exposure glass (page 636)
2. Top front cover (page 637)
3. Top left cover (page 638)

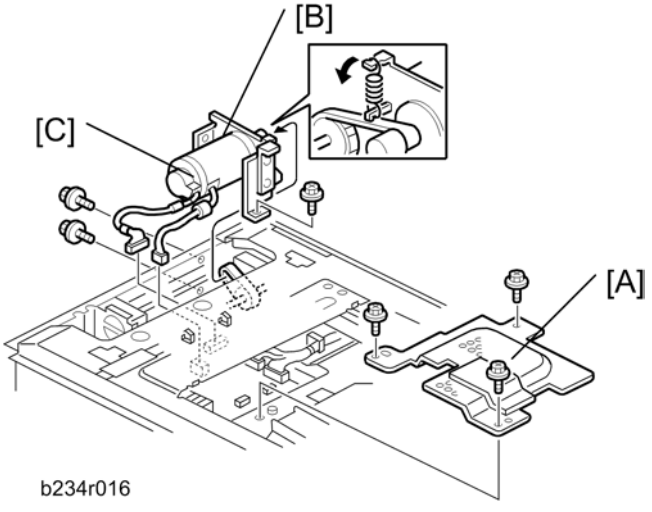

4. Remove the MCU [A] cover (x 3).
5. Scanner motor assembly [B] (x2, x 2, x 3)
6. Scanner motor [C] from the bracket (x 3)
7. After reassembly, do the copy image adjustments. (page 330)

Scanner Drive Wires

Preparation

1. Remove the ADF unit (page 621).
2. Optics dust filter (page 637)
3. Exposure glass (page 636)
4. Top front cover (page 637)
5. Top rear cover (page 639)
6. Top right cover (page 639)
7. Bracket (page 649 "SIB (Scanner Interface Board)")

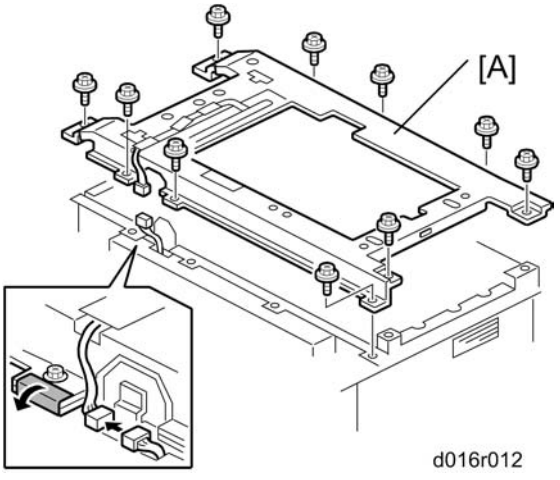

8. Scanner frame [A] (x 12, x1).

Front, Rear Scanner Drive Wires

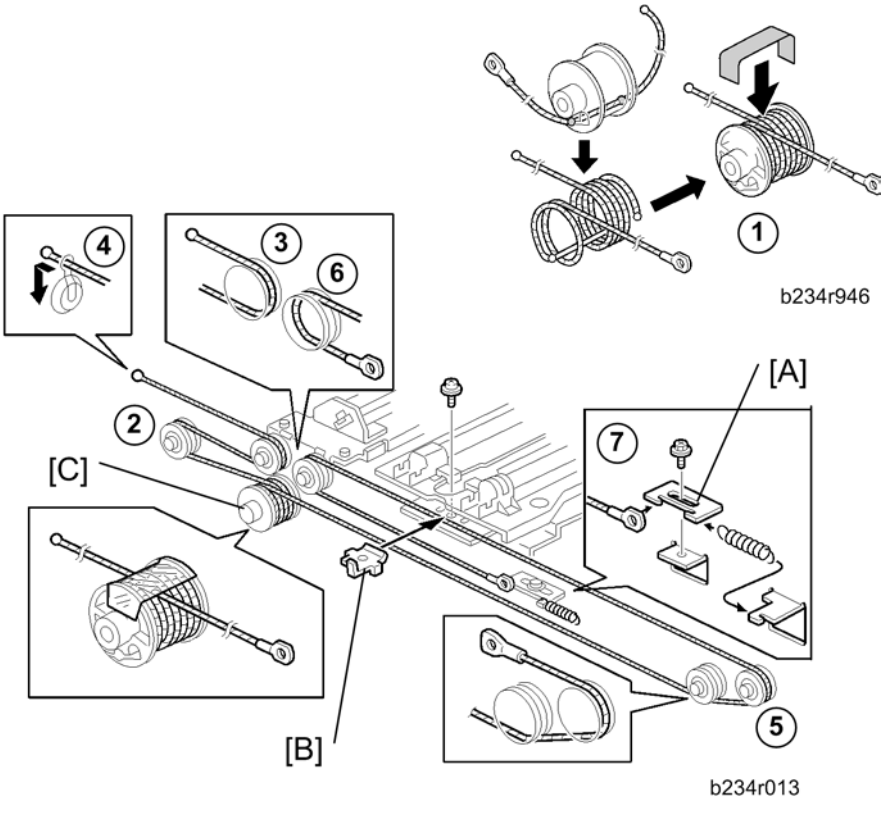

1. Wire tension bracket [A] (x 1).
2. Front scanner wire bracket [B].

3. Front scanner wire.

Reinstallation

1. Scanner wire pulley [C] (x 1).
2. While making sure of the direction, place the beads on the middle of the wire on the pulley openings. Then wind the wire (ball side) 3 times and the other side (ring side) once as shown À. Secure the pulley with tape to keep this condition.
3. Install the pulley on the scanner drive shaft (x 1).
4. Wind the end of the wire with the ball as shown (②, ③, ④).
5. Wind the end of the wire with the ring as shown (⑤, ⑥, ⑦).
6. Install the tension spring on the tension bracket, and slightly tighten the tension bracket (x 1).

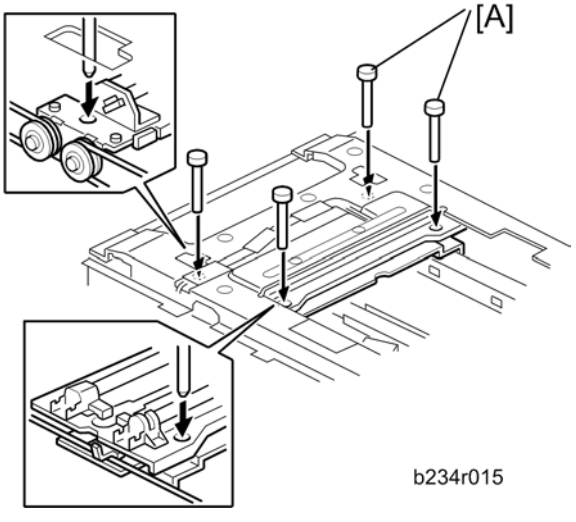

7. Install the 1st scanner and adjust the position with the positioning tools [A].

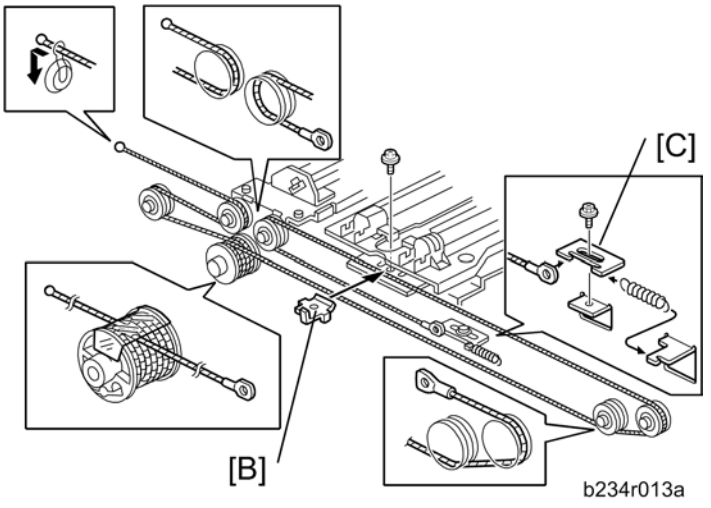

8. Secure the 1st scanner with the scanner wire bracket [B] (x 1).
9. Tighten the tension bracket [C] and remove the tape.
10. Remove the positioning tools. After sliding the scanner to the right and left several times, set the positioning tools to check the scanner wire bracket and the tension bracket again.
11. Reassemble the scanner and do the scanner and copy adjustments (page 330 "Image Adjustment")

Note

- The tension of the scanner wire must be adjusted every 3000K. To do this adjustment, set the positioning tools [A], then loosen the screw at the scanner wire bracket [B] and retighten it.

MCU (Motor Control Unit)

1. Exposure glass (page 636)
2. Top front cover (page 637)
3. Top left cover (page 638)
4. MCU cover (page 644 "Scanner Motor")

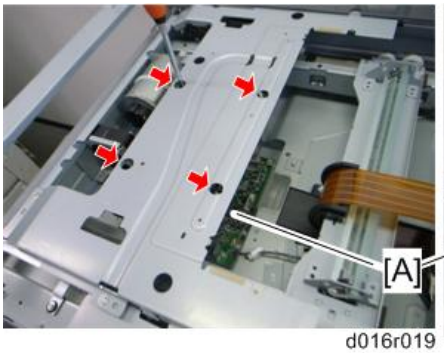

d016r019

d016r020

5. MCU board [A] (x 4, x all)
   - Insert a screwdriver into the four holes (marked with arrows) on the bracket to remove the MCU board.

SIB (Scanner Interface Board)

1. Optics dust filter (page 637)
2. Top right cover (page 639)

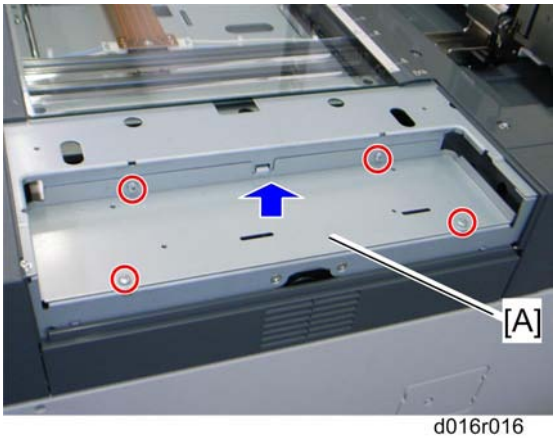

d016r016

3. Bracket [A]

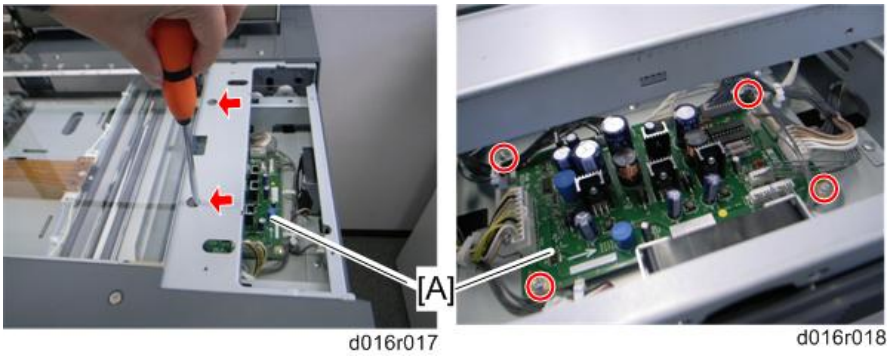

4. SIB [A] (x 4, x all)
   - Insert a screwdriver into the two holes (marked with arrows) on the bracket to remove the SIB.

LCT-MF (D095 only)

Covers

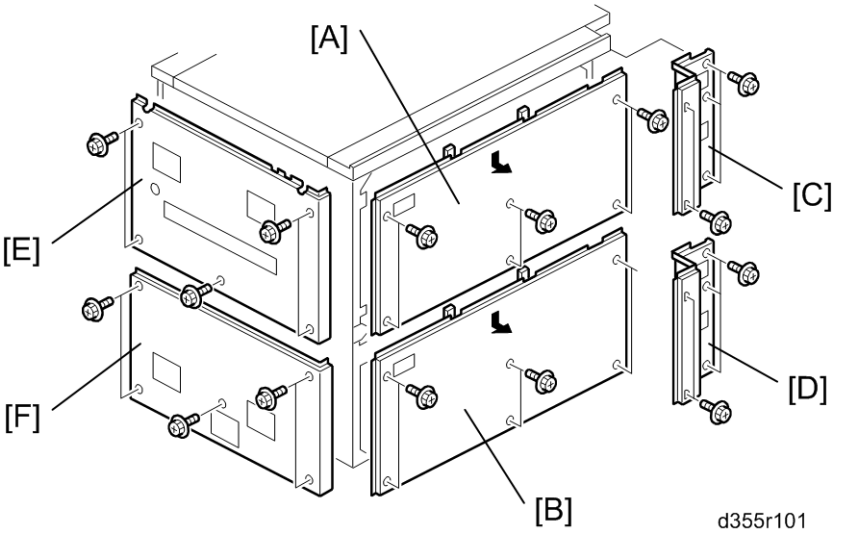

1. Remove:

   [A] Rear upper cover (x 6)

   [B] Rear lower cover (x 6)

   [C] Left rear upper cover (x 5)

   [D] Left rear lower cover (x 5)

   [E] Right upper cover (x 5)

   [F] Right lower cover (x 5)

Inner Covers

1. Open the front cover of the LCT-MF.

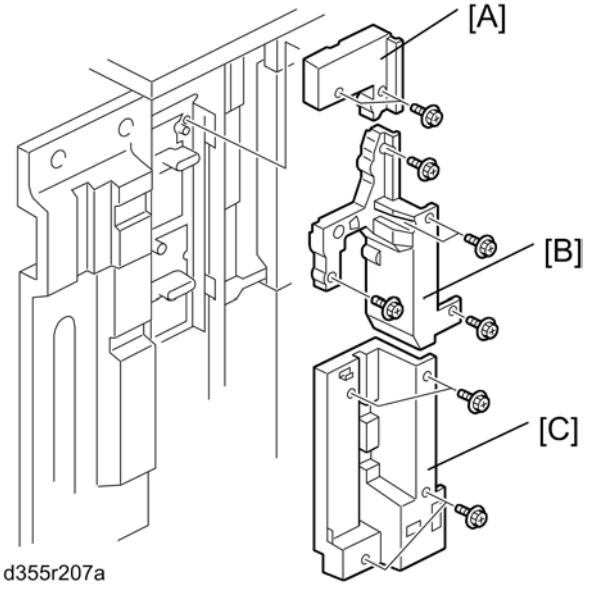

2. Remove:

   [A] Inner top cover (x 2)

   [B] Inner middle cover (x 5)

   [C] Inner bottom cover (x 4)

Side Registration Adjustment

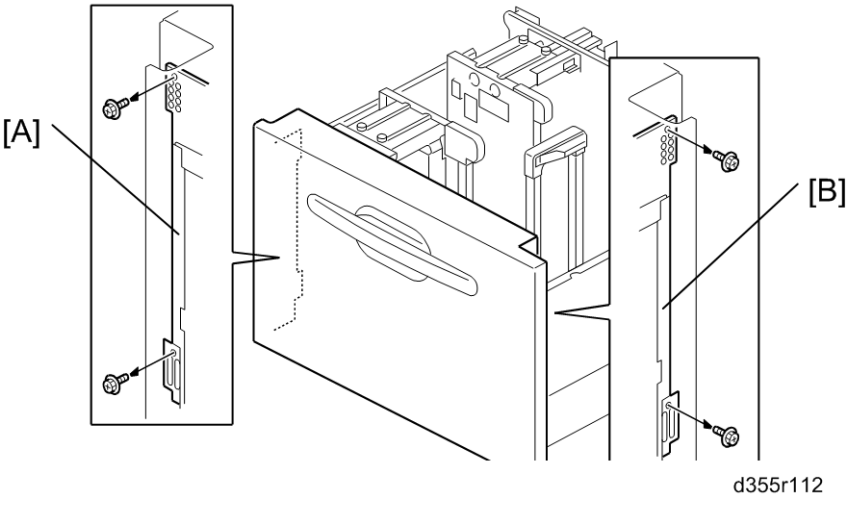

The side-to-side registration for this LCIT can be adjusted with Super User SP1711-008 for the upper tray and -009 for the lower tray.

However, if punched hole positions are not aligned on paper fed from this LCIT, you can first adjust the side registration by changing the tray cover position as described below, and then adjust the side registration of the image with Super User SP1711-008 and -009 (Side-to-Side Reg: WIDE LCT).

1. Pull out the tray.
2. Change the screw positions at both the right [A] and left [B] sides as shown.

   Adjustment range: 0±2.0 mm, Step: 0.5 mm

Trays

⚠CAUTION

- The tray weighs 25 kg (55.1 lb.) empty.
- To prevent damage to the tray and personal injury, never attempt to lift the tray alone, especially if it is loaded with paper.
- Two people are required to carry or move the tray.

1. Pull tray 1 or 2 out of the LCT until it stops.

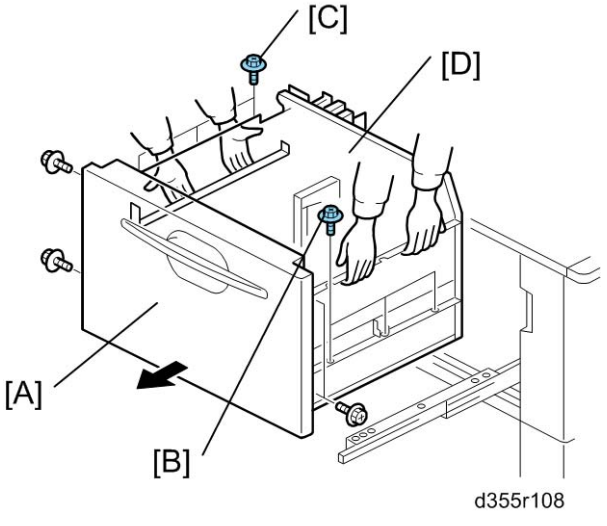

2. Tray cover [A] (x 4).
3. Remove the screws [B] from the right rail (x 3).
4. Remove the screws [C] from the left rail (x 3).

   Note

   - You do not need to remove the screw for the stopper pin bracket at the back of the left rail.
5. Tray 1 or 2 [D]

Side Fence

Front Side Fence

1. Pull the tray unit out.

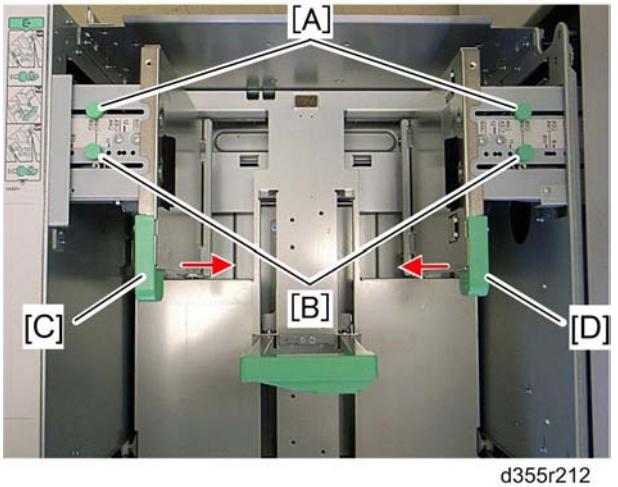

d355r212

2. Loosen the two fixed screws [A].
3. Remove the two fixed screws [B].
4. Move the front side fence [C] and the rear side fence [D] to loosen them.

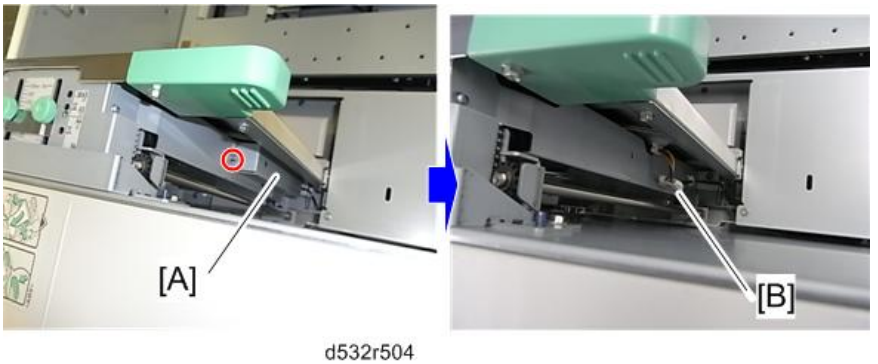

d532r504

5. Harness cover [A] (x 1).
6. Disconnect the harness [B] at the front side fence.

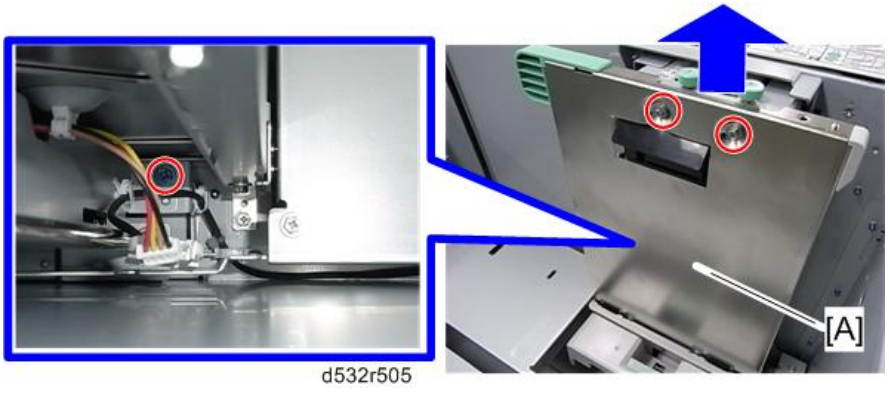

7. Pull up the front side fence [A], and then remove it (x 3).

Rear Side Fence

1. Pull the tray unit out.

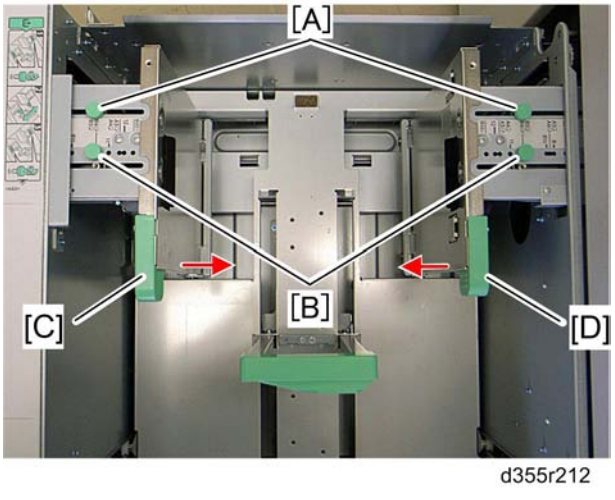

2. Loosen the two fixed screws [A].
3. Remove the two fixed screws [B].
4. Move the front side fence [C] and the rear side fence [D] to loosen them.

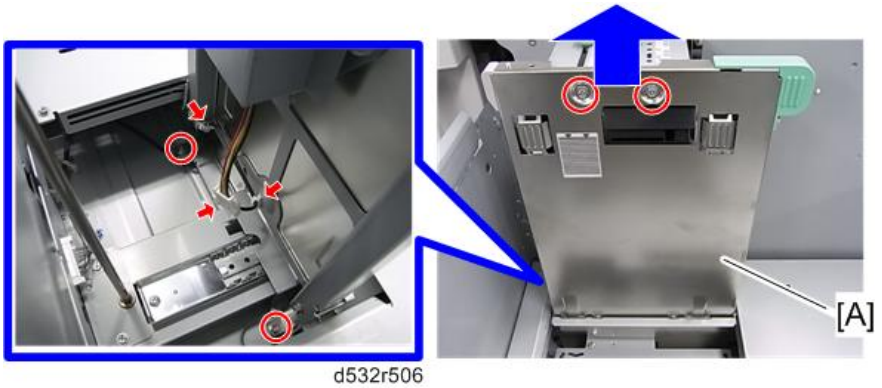

d532r506

5. Pull up the rear side fence [A], and then remove it (x 4 x 2, x 1).
   - The left-hand photo shows the back area of the rear side fence.

Side Fence Blower

Front Side Fence Blower

1. Front side fence (page 654).

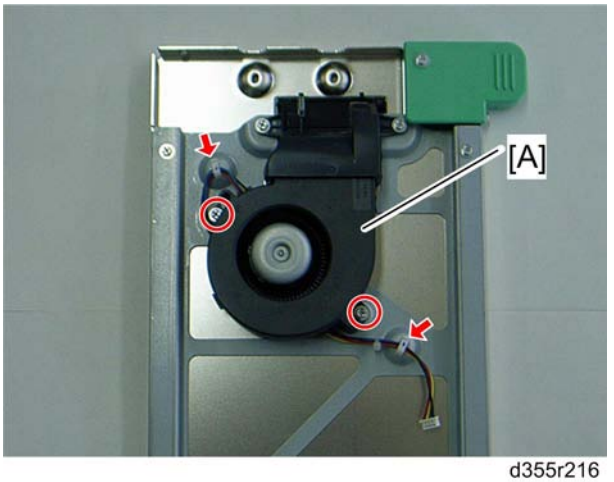

d355r216

2. Front side fence blower [A] (x 2: M4 x 8, x 2).

Rear Side Fence Blower

1. Rear side fence (page 655).

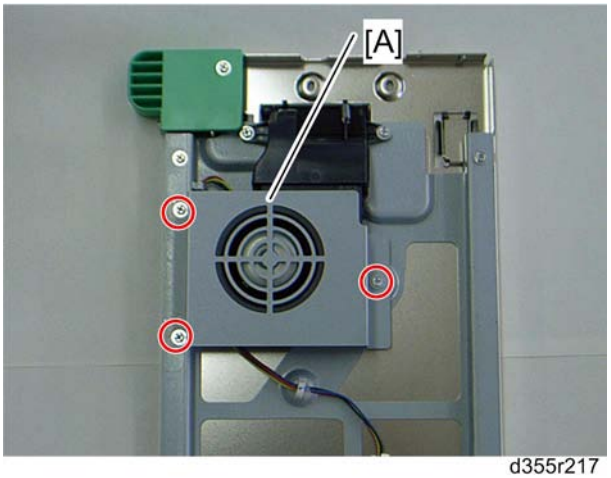

d355r217

2. Remove the guard bracket [A] (x 3).

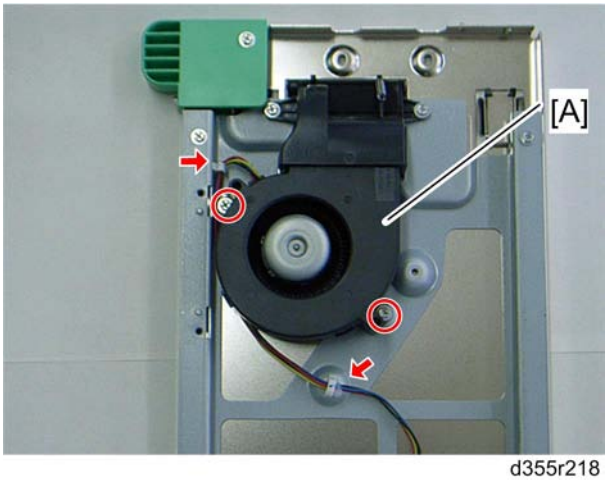

d355r218

3. Remove the rear side fence blower [A] (x 2, x 2).

LCT Paper Length Sensor

1. Front and rear side fences (page 654)

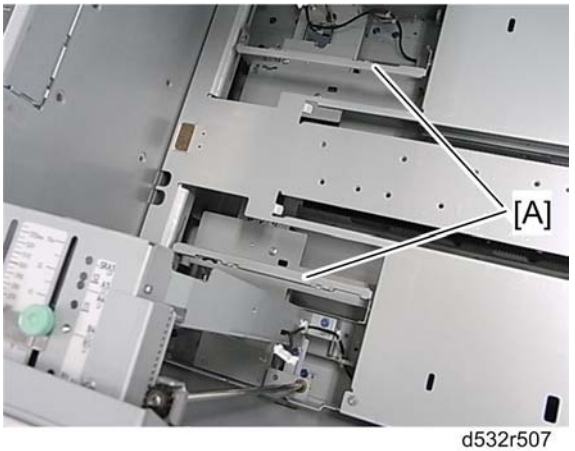

d532r507

2. Bottom plate support brackets [A]

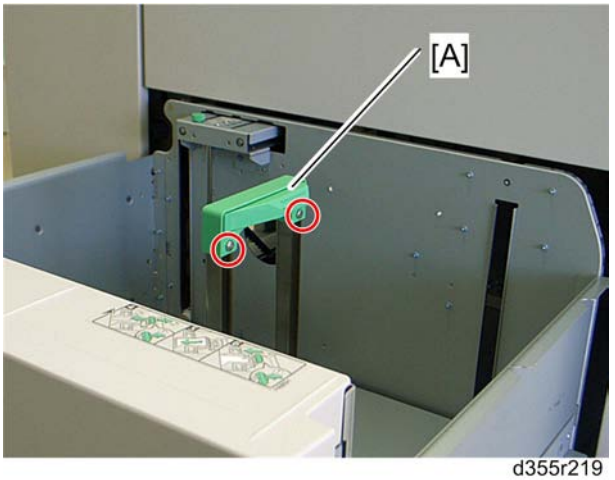

d355r219

3. End fence grip [A] (Bind screw x 2: M4 x 8).

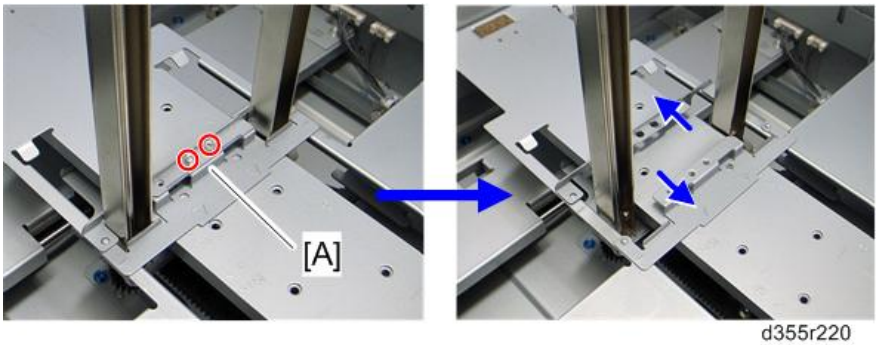

d355r220

4. End fence plates [A] as shown above (x 2).

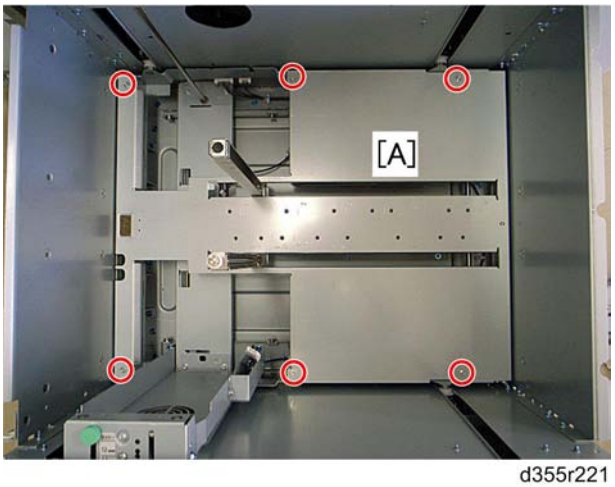

d355r221

5. Tray bottom plate [A].

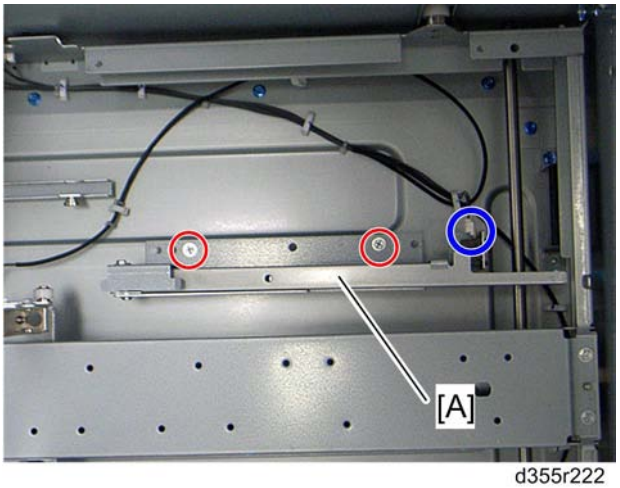

d355r222

6. Bracket [A] (x 2, x 1).

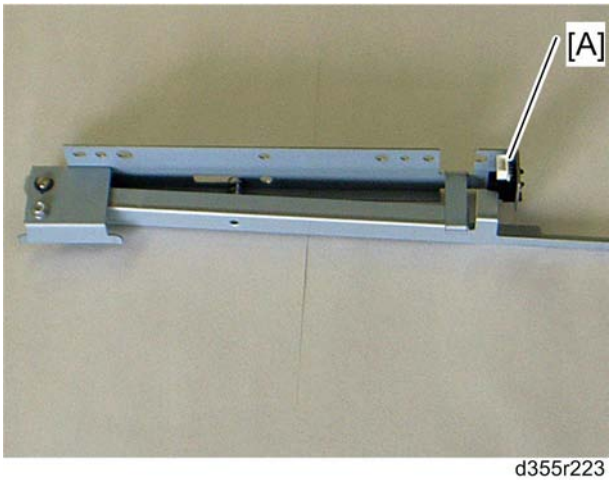

d355r223

7. LCT paper length sensor [A]

Paper Feed Unit

1. Open the front cover of the LCT-MF.
2. Pull tray 1 or 2 out of the LCT until it stops.

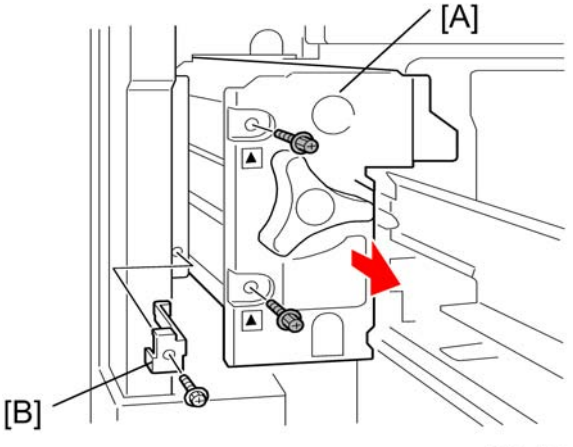

d532r105

3. Pull the paper feed unit [A].
4. Stopper [B] (x 1)

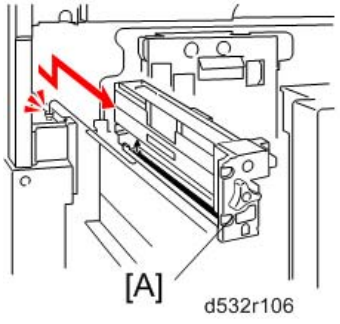

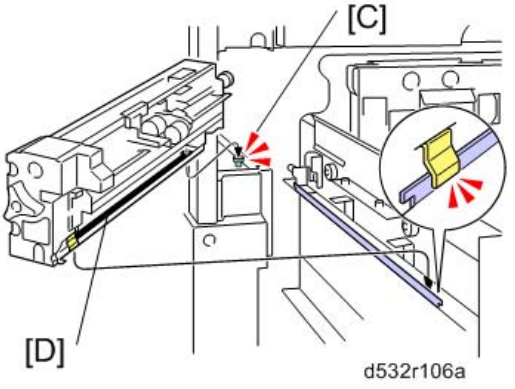

5. Paper feed unit [A]
   - When reinstalling the paper feed unit in the LCT-MF, set the paper feed unit so that the stud screw [C] on the LCT-MF is inserted in the rail [D] of the paper feed unit.

Paper Feed, Pick-up and Separation Rollers

1. Pull tray 1 or 2 out of the LCT until it stops.

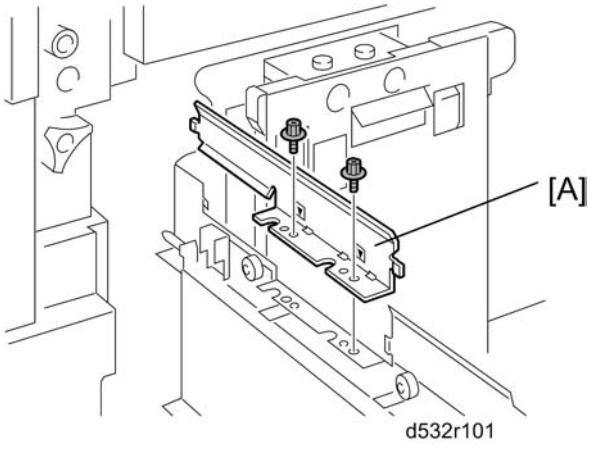

2. Paper tray side bracket [A] (x 2)

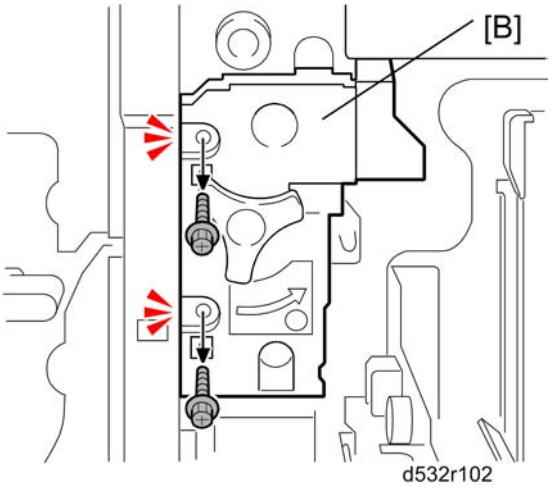

3. Pull the paper feed unit [B] (x 2).

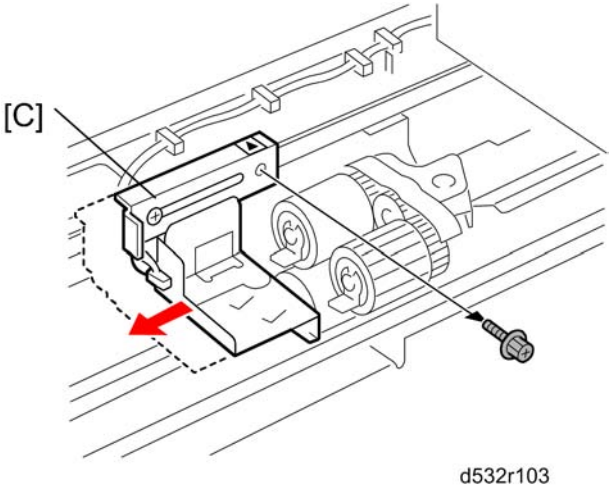

4. Slide the sensor bracket [C] to the front side (x 1).

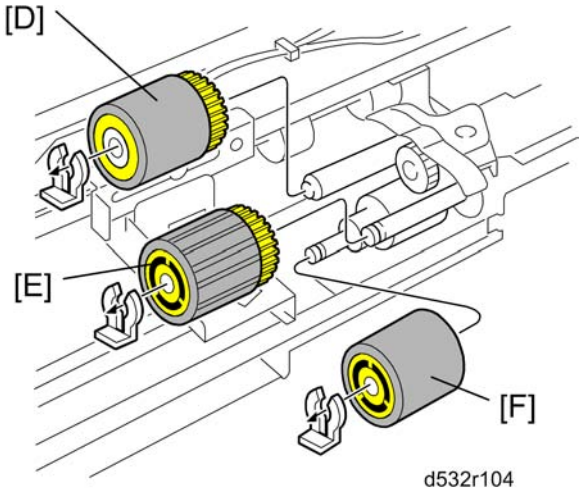

5. Remove:

   [D] Paper feed roller (x 1).

   [E] Paper pick-up roller (x 1).

   [F] Paper separation roller (x 1).

Note:

- Never touch the surface of the rollers with bare hands.
- The LCT pick-up and separation rollers are the same as the pick-up and separation rollers in the paper trays of the main machine. These rollers are interchangeable.
- The feed rollers of the LCT and main machine paper trays are different because they are designed to rotate in the opposite direction. The feed rollers of the LCT and main machine are not interchangeable.

Paper Feed, Paper End and Paper Lift Sensors

Note

- The replacement procedures are identical for the upper tray and the lower tray.

Paper Lift Sensor

1. Paper feed unit (page 660)

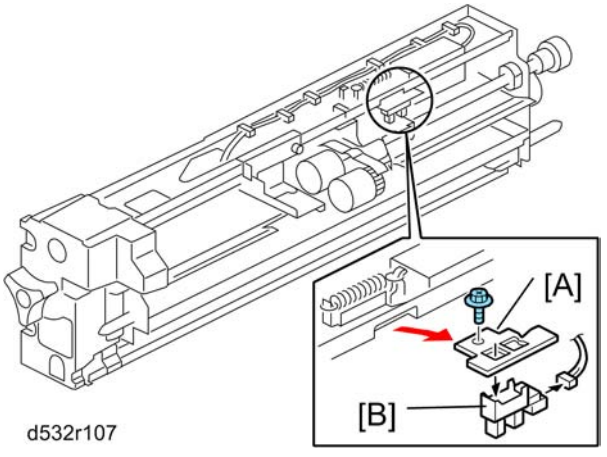

2. Paper lift sensor bracket [A] (x 1, x 1)
3. Paper lift sensor [B] (hooks)

Paper Feed and Paper End Sensors

1. Paper feed unit (page 660)

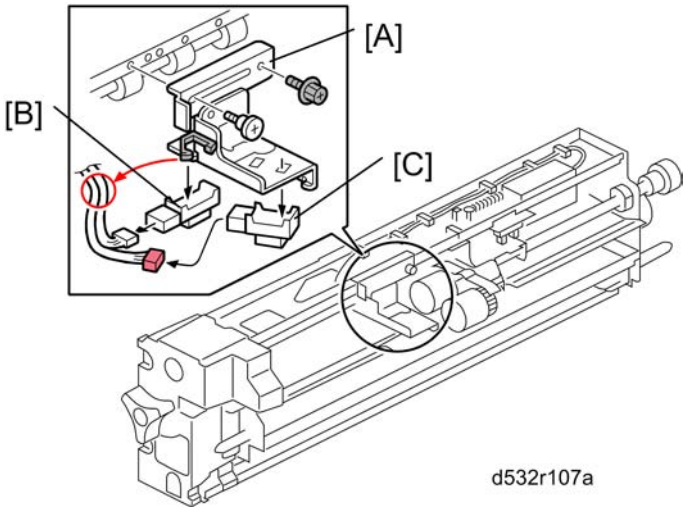

2. Sensor bracket [A] (x 2, x 2)
3. Paper feed sensor [B] (hooks)
4. Paper end sensor [C] (hooks)

LCT Exit Motor

1. Left rear upper and lower covers (page 651 "Covers").

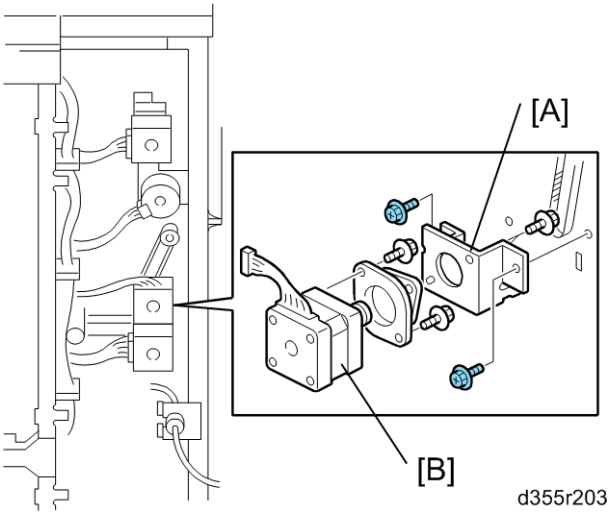

2. Remove:

   [A] Motor unit (x1, Timing belt x1, x 2)

   [B] LCT exit motor (x 2)

LCT Exit Roller Contact Motor

1. Left rear upper cover (page 651 "Covers").

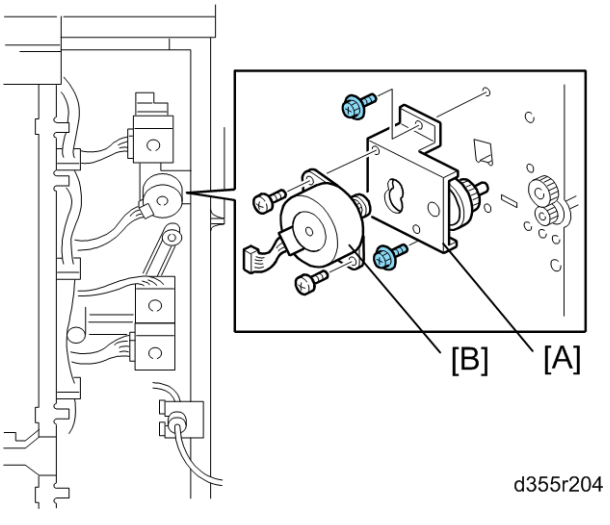

2. Remove:

   [A] Motor unit (x1, x 2)

   [B] LCT exit roller contact motor (x 2)

LCT Vertical Transport Motor

1. Left rear upper and lower covers (☛page 651 "Covers").

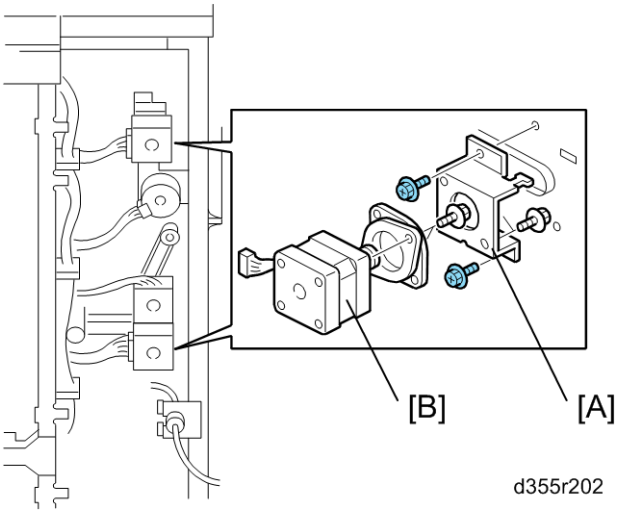

2. Remove:

   [A] Motor unit (x1, x 2, Timing belt x 1)

   [B] LCT vertical transport motor (x 4)

LCT Horizontal Relay Motor

1. Rear upper cover (☛page 651 "Covers").

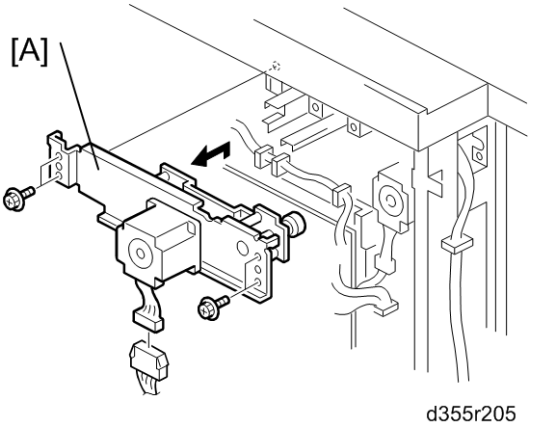

2. Remove:

   [A] Motor unit [A] (x1, x 4).

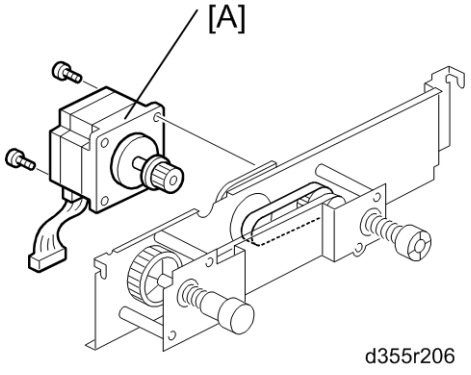

3. Remove:

   [A] LCT horizontal relay motor [A] (x 2)

LCT Paper Feed Motor, LCT Grip Motor

1. Rear cover (page 651 "Covers").

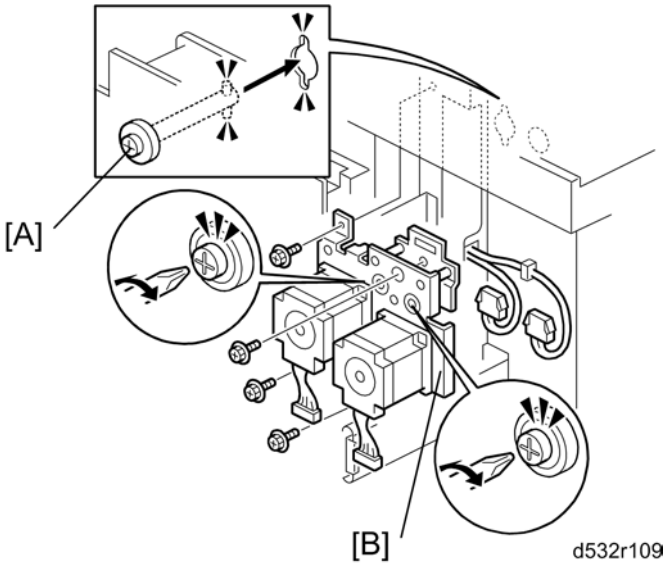

2. Use a small screwdriver to turn the shaft [A] so that the pin can slip out of the keyhole.
3. Motor unit [B] (x 4, x2, x2)

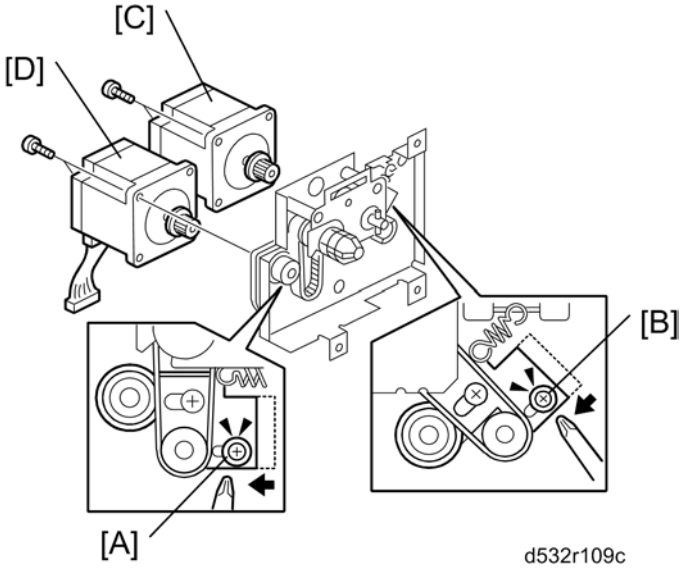

4. Remove:

   [A] Spring x1. First, loosen the screw.

   [B] Spring x1. First, loosen the screw.

   [C] LCT paper feed motor (x2, Timing belt x1)

   [D] LCT grip motor (x2, Timing belt x1)

Reinstallation

- First, attach the tension springs.
- Second, tighten the screws to tighten the belts.

LCT Lift Motor

1. Rear cover (page 651 "Covers")

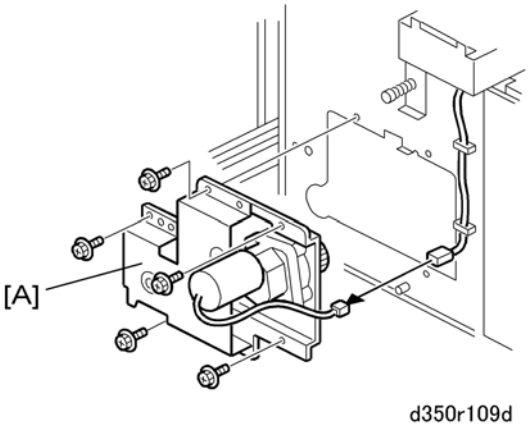

2. Remove:

   [A] Motor unit (x5, x1)

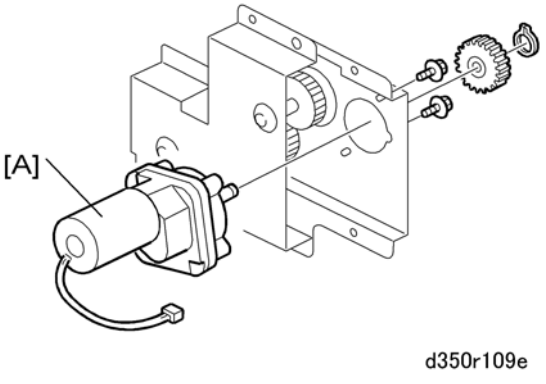

3. Remove:

   [A] LCT lift motor (x 2, Clip x 1, Gear x 1)

LCT Exit Sensor

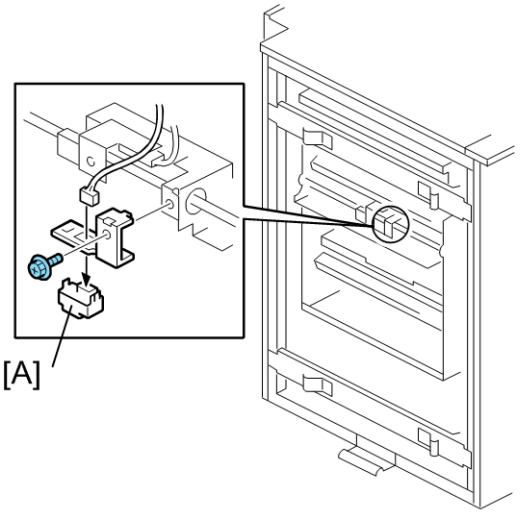

d355r201

1. Remove:

   [A] LCT exit sensor (x 1, x 1)

LCT Paper Exit Roller Contact Sensor

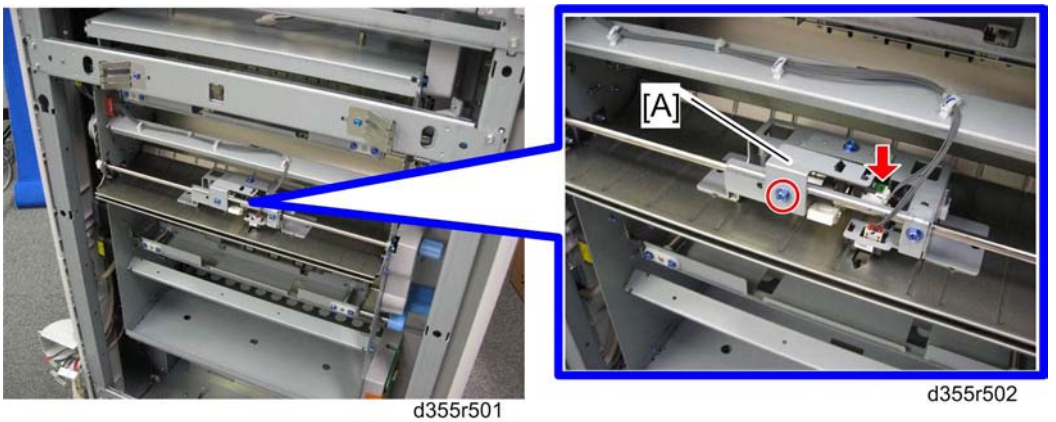

d355r501 d355r502

1. Sensor bracket [A] (x 1, x 1)

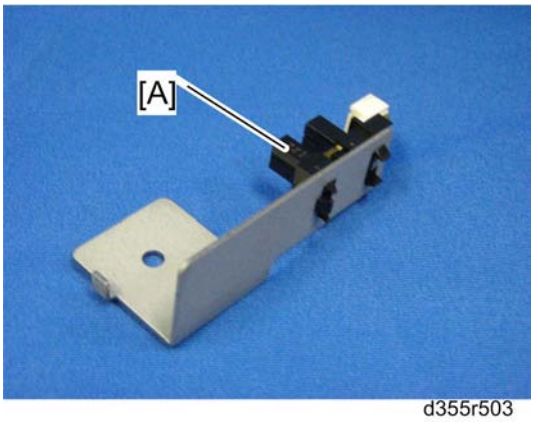

2. LCT paper exit roller contact sensor [A]: (hooks)

LCT Vertical Transport and Grip Sensors

Note

- Remove the multi bypass tray first, if it is installed.

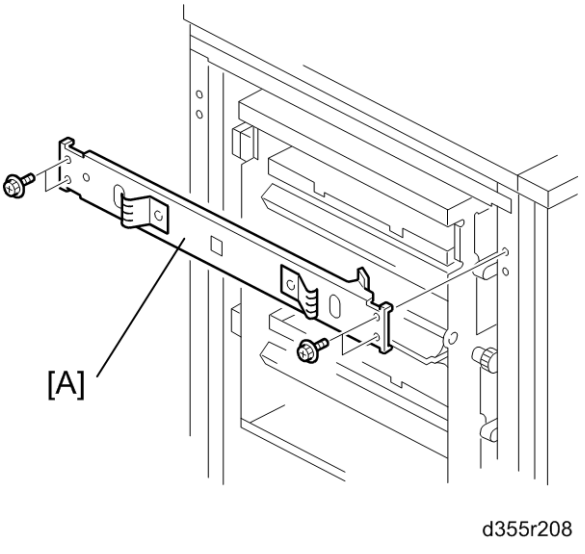

1. Remove:

   [A] Stay (x 4).

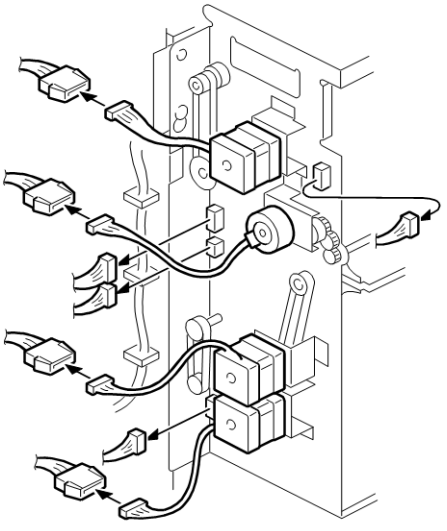

d355r209

2. Disconnect the harnesses (x All).

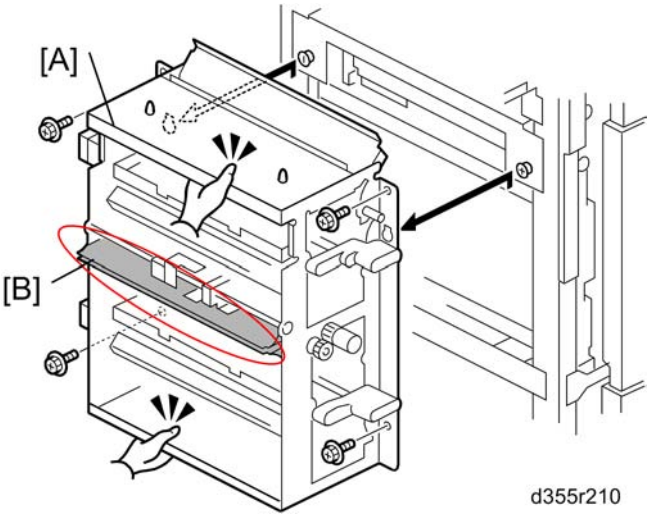

d355r210

3. Remove:

   [A] Vertical exit unit (x 4)

   Important

   - Firmly grip the vertical exit unit as shown above, and then remove it from the LCT unit.
   - Do not grip the guide [B], because it is easy to deform.

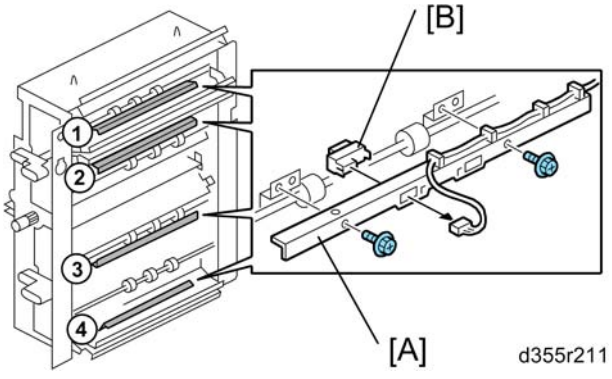

4. Remove:

   [A] Sensor bracket (x 2, x 1)

   [B] LCT sensors (hooks)

   - ① LCT grip sensor 1
   - ② LCT vertical transport sensor 1
   - ③ LCT vertical transport sensor 2
   - ④ LCT grip sensor 2

Paper Height, Paper Width Sensors

Paper Height Sensors

1. Tray 1 or tray 2 (page 653)

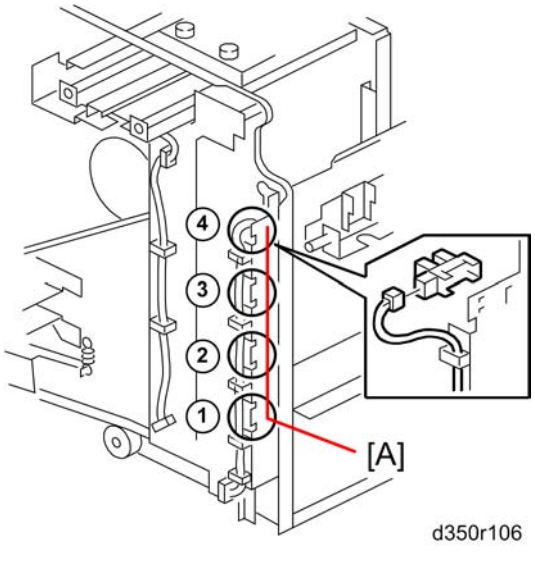

2. Remove the rear left upper and lower covers.
3. Remove:

   [A] Paper height sensors (x4) (x1, pawls x 3 each)

Paper Width Sensors

1. Tray 1 or tray 2 (page 653)

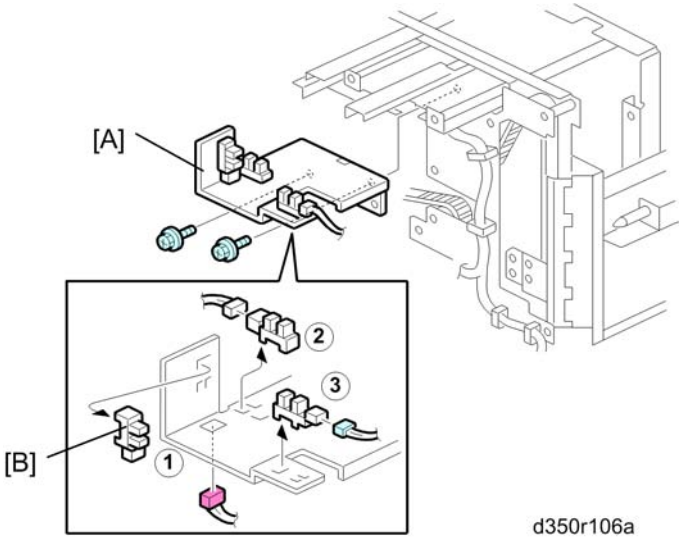

2. Remove the rear left cover.

   [A] Paper width sensor unit (x2, x3)

   [B] Paper width sensors (x3) (x1 each, Pawls x 3 each)

Main Board

1. Rear lower cover (page 651 "Covers")

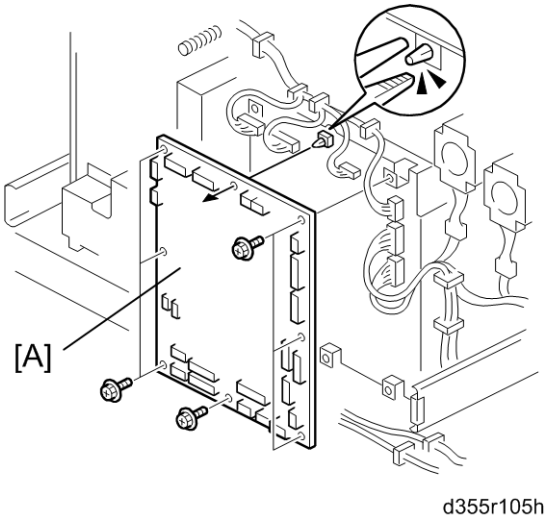

2. Remove:

   [A] Main board (x 7, Standoff x1, x All)

5. System Maintenance

Service Program Mode Operation

The service program (SP) mode is used to check electrical data, change modes, and adjust values.

⚠CAUTION

- Never turn off the main power switch when the power LED is lit or flashing. To avoid damaging the hard disk or memory, press the operation switch to switch the power off, wait for the power LED to go off, and then switch the main power switch off. (☛page 58 "Correct Procedure to Turn Off the Power ")

Service Mode Lock/Unlock

At locations where the machine contains sensitive data, the customer engineer cannot operate the machine until the Administrator turns the service mode lock off. This function makes sure that work on the machine is always done with the permission of the Administrator.

1. If you cannot go into the SP mode, ask the Administrator to log in with the User Tool and then set "Service Mode Lock" to OFF. After he or she logs in:

   [User Tools] > System Settings > Administrator Tools > Service Mode Lock > OFF

   - This unlocks the machine and lets you get access to all the SP codes.
   - The service technician can do servicing on the machine and turn the machine off and on. It is not necessary to ask the Administrator to log in again each time the machine is turned on.
2. If you must use the printer bit switches, go into the SP mode and set **SP5169** to "1".
3. After machine servicing is completed:
   - Change **SP5169** from "1" to "0".
   - Turn the machine off and on.
   - Tell the administrator that you completed servicing the machine.
   - The administrator will then set the "Service Mode Lock" to ON.

To Switch to the APL (Application) Window for Test Printing

1. In the SP mode display, press "APL Window" to switch to the print operation screen when you need to select paper for a test print.
2. Use the APL window (copier mode) to select the appropriate settings (paper size, etc.) for the test print.
3. Press the "Start key" to execute the test print.

4. Press SP Mode (highlighted) to return to the SP mode screen and repeat from step 1.

Using the SP Mode

SP command numbers can be entered directly (if you know the entire number) or the command can be selected from the menus.

Direct Entry

If you know all seven digits of the SP code, enter the seven numbers and press Enter key #.

However, if you do not know all the numbers, enter only the first four numbers of the seven-digit SP and press Enter key #. The display goes immediately to the first SP of that group. Then you can use the buttons to browse to the desired selection.

Button Selection Entry

1. Refer to the SP Mode Tables at the end of this section to find the SP that you want to adjust.
2. Press the Group number on the left side SP Mode window that contains the SP that you want to adjust.
3. Use the scrolling buttons in the center of the SP mode window to display the SP number that you want to open, then, press that number to expand the list.
4. Use the center touch-panel buttons to scroll to the number and title of the item that you want to set, and press the Enter key #. The small entry box on the right is activated and displays the default or the current setting below.
5. To enter a setting
   - Press the key to enter a minus sign. Then use the keypad to enter the appropriate number. The number you enter will write over the previous setting.
   - Press the # to enter the setting. (If you enter a number that is out of range, the key press is ignored.)
   - Press the Clear key to cancel the data.
6. If you need to perform a test print, press Copy Window to open the copy window and select the settings for the test print. Press the Start key.
7. Press SP Mode (highlighted) in the copy window to return to the SP mode display.
8. When you are finished, press Exit twice to return to the copy window.

SP Mode Button Summary

Here is a short summary of the touch-panel buttons.

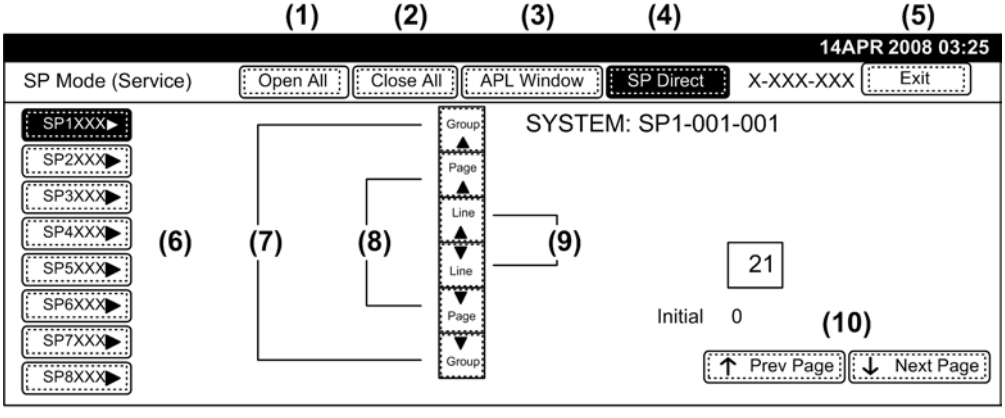

g178s902

(1)	**Open All:** Opens all SP groups and sublevels.
(2)	**Close All:** Closes all open groups and sublevels and restores the initial SP mode display.
(3)	**APL Window:** Opens the APL window (application mode) so you can make test copies. To return to the SP mode screen, press SP Mode (highlighted) in the copy window.
(4)	**SP Direct:** Enter the SP code directly with the number keys if you know the SP number, then press the Enter key #. (SP Direct must be highlighted before you can enter the number. Just press SP Direct if it is not highlighted.)
(5)	**Exit:** Press twice to leave the SP mode and return to the copy window to resume normal operation.
(6)	**SPnxxx:** Press any group number to open a list of SP codes and titles for that group. For example, to open the SP code list for SP1-nnn, press SP1xxx. If an SP has sublevels, it is marked with a right pointing triangle.
(7)	**Group:** Press to scroll the display to the previous or next group.

(8)	**Page:** Press to scroll to the previous or next display in segments the size of the screen display (page).
(9)	**Line:** Press to scroll the display to the previous or next line, line by line.
(10)	**Prev Page or Next Page:** Press to move the highlight on the left to the previous or next selection in the list.

Service Program Tables

SP Tables

See "Appendices" for the following information:

- System SP Tables
- Printer SP Tables
- Scanner SP Tables
- Input Check
- Output Check

Service Table Key

Notation	What it means
[range/default/step]	Example: [–9 to +9 / **xx** / 0.1 mm] The default setting can be adjusted in 0.1mm steps in the range ±9. Note: The default setting for each SP mode is shown on the screen in the "Initial" box immediately below the entry box.
DFU	Denotes "Design or Factory Use". Do not change this value.
Japan only	The feature or item is for Japan only. Do not change this value.
LEF	Long Edge Feed
SEF	Short Edge Feed

Abbreviations for SP Service Tables

The SP titles are abbreviated so they can be used in smaller the 2-line displays of future printer models. Refer to this list if you do not understand the meaning of an abbreviation.

Code	Meaning
1/3S	One-third Speed
1C	One Color

Code	Meaning
1Op	1 Operation (execution cycle)
1-S	1-Side (Simplex)
2-S	2-Side (Duplex)
Abs	Absolute
Adj	Adjustment
Agi	Agitation
Amt	Amount
B/W	Black-and-White (2-Color)
BotPlt	Bottom Plate (Tray)
C	Cyan
Calib	Calibration
Chg	Change
Chk	Check
Chrg	Charge
Cir.	Circulation
Cnt	Count
Coeff	Coefficient
Col	Color
Cont	Continuous Operation
Cor	Correction
Ctrl	Control
CTL	Controller Board (GW)
Den	Density
Dev	Development
Devr	Developer

Code	Meaning
Disp	Display
Dupx	Duplex
EMargin	Erase Margin
EngSave	Energy Save
Ent	Entrance
Env	Environment
Err	Error
Exe	Execute
FC	Full Color
Fin1	Euphrates
Fin2	Victoria-D
Fin3	Zaire (Japan only)
Fwd	Forward
Gray	Grayscale
Haf	Half Speed
Height	Hgt
HH	Highest (High High)
HS	Half Speed
Htg	Htg
Htg Roll	Heating Roller
I/O	Input/Output
Init	Initial power on
Int	Interval
IntCnt	Interval Count
Inv	Inverter

Code	Meaning
ITR	Image Transfer
JG	Junction Gate
K	Black, BK
L	Lengthways (SEF)
LEdge	Leading Edge
LL	Lowest (Low Low)
Lvl	Level
M	Motor
M	Magenta
Meas	Measurement
Mem	Memory
MH	Medium High
ML	Medium Low
MM	Medium (Medium Medium)
Norm	Normal Paper
NS	Normal Speed
Opt.	Optical
Patt	Pattern
PE	Paper End
Pgs	Pages
Photo	Pht
PM	Pulse Modulation
PolyM	Polygon Motor
Pos	Position
Poten	Potential

Code	Meaning
PPr	Photo Paper
Press	Pressure
Prior	Priority
P-Roll	Pressure Roller
Prmr	Parameter
ProCon	Process Control
Pt	Point
PT	Paper Transfer
PTR	Paper Transfer Roller
Ptype	Paper Type
Pwr	Power
Recov	Recovery
Reg	Registration
Reps	Repetitions
Rev	Reverse
Roll	Roller
Rot	Rotation
s	seconds
S	Sideways (LEF)
SApli	Scanner Application
Sep	Separation
Shts	Sheets
Sn	Sensor
Sp1	Special Paper 1
SS	Saddle-Stitch

Code	Meaning
Std	Standard
Stp	Staple
StrTemp	Start Temperature
Sub	Sub Hopper
SWT	Switch Timing
Syn	Synchronization
T1	Tray 1
T2	Tray 2
T3	Tray 3
T4	Tray 4
Tan	Tandem
TC	Toner Control
TE	Toner End
TE Sn	Toner End Sensor
TEdge	Trailing Edge
Temp	Temperature
Temp Chg	Temperature Change
Thk	Thick (Paper)
Thresh	Threshold
Tmg	Timing
TNE	Toner Near End
Tnr	Toner
Tnr M	Toner Motor
Tra	Trace (thin) Paper
TxtOCR	Text (OCR)

Code	Meaning
TxtPrt	Text (Print)
Usd Tnr	Used Toners
Vert	Vertical
Y	Yellow

Using SP Mode

CPM Down (SP1201)

This machine uses CPM (PPM) down control to compensate for insufficient fusing temperature or high temperature in small size (less than 228 mm) printing. The execution condition of this control differs depending on the temperature inside the machine (low temperature or normal temperature). The threshold between low and normal temperature can be adjustable with SP1107-018.

SP1107-018: Low Temp On/Off

This adjusts the threshold temperature for low temperature condition.

[10 to 23 / **17** / 1 deg]

SP1201-001 and -002: Threshold Temperature for CPM Down

These SPs adjust DOWN or UP threshold.

If the detected fusing temperature is 30°C lower than a target temperature, the machine enters the CPM down mode.

If the detected fusing temperature is 8°C lower than a target temperature, the machine enters the CPM up mode.

Note

- The target temperature is calculated referring to paper type, condition, print mode and etc.
- -001: Threshold temperature for CPM DOWN

  [0 to -50/ **-30** / 1 deg]
- -002: Threshold temperature for CPM UP

  [0 to -50/ **-8** / 1 deg]

SP1201-003 to -005: Low Temp.: CPM Down Rate

These SPs adjusts the Low Temp.: CPM Down (PPM) rate. The machine tries to detect a fusing temperature every 10 seconds (adjustable with SP1201-024). Whenever the machine gets CPM down, the machine enters a next mode.

For example, the machine enters the Low Temp.: 1st CPM Down after detecting 30°C lower than a target temperature. If the machine still detects that a fusing temperature is 30°C lower than a target temperature after 10 seconds, the machine enters the next mode (Low Temp.: 2nd CPM Down). The

machine determines which mode the machine is now in every 10 seconds, and then goes forward or back one by one among these modes.

- -003: CPM down rate for Low Temp.:1st CPM Down

  [10 to 100/ **80** / 1 %]
- -004: CPM down rate for Low Temp.:2nd CPM Down

  [10 to 100/ **60** / 1 %]
- -005: CPM down rate for Low Temp.:3rd CPM Down

  [10 to 100/ **40** / 1 %]

SP1201-006 to -011: CPM Down Rate and Mode Threshold Temp

These SPs adjust CMP (PPM) down rate and mode threshold temperature for small size paper.

For example, the machine enters the "High Temp:1st CPM Down" mode if the paper size to be used is small size paper (less than 228 mm) and the temperature of the fusing unit reaches 215°C (threshold temperature for High Temp.:1st CPM Dow) by default setting.

- -006: CPM down rate for High Temp.:1st CPM Down

  [10 to 100/ **80** / 1 %]
- -007: CPM down rate for High Temp.:2nd CPM Down

  [10 to 100/ **60** / 1 %]
- -008: CPM down rate for High Temp.:3rd CPM Down

  [10 to 100/ **40** / 1 %]
- -009: Down threshold for High Temp.:1st CPM Dow

  [160 to 240/ **215** / 1 deg]
- -010: Down threshold for High Temp.:2nd CPM Down

  [160 to 240/ **219** / 1 deg]
- -008: Down threshold for High Temp.:3rd CPM Down

  [160 to 240/ **222** / 1 deg]

SP1201-012 to -023: CPM Down Rate for Each Mode

These SPs adjust the Low Temp.: CPM (PPM) Down rates for each paper type and machine's temperature.

Adjustable range

[0 to 3 / default: see the following table.]

0: No CPM down

1: Low Temp.: 1st CPM Down (Default: 80%)

2: Low Temp.: 2nd CPM Down (Default: 60%)

3: Low Temp.: 3rd CPM Down (Default: 40%)

Paper Type	Low Temp. inside Machine	More than Low Temp. inside Machine
Plain	No Control (SP1201-012)	No Control (SP1201-018)
Thin	No Control (SP1201-013)	No Control (SP1201-019)
Middle Thick	No Control (SP1201-014)	No Control (SP1201-020)
Thick 1	No Control (SP1201-015)	No Control (SP1201-021)
Thick 2	No Control (SP1201-016)	No Control (SP1201-022)
Thick 3	Mode 2 (SP1201-017)	No Control (SP1201-023)

Using the Debug Log

Overview

This machine provides a Save Debug Log feature that allows the Customer Engineer to save and retrieve error information for analysis.

Every time an error occurs, debug information is recorded in volatile memory but this information is lost when the machine is switched off and on.

To capture this debug information, the Save Debug Log feature provides two main features:

- Switching on the debug feature so error information is saved directly to the HDD for later retrieval.
- Copying the error information from the HDD to an SD card.

When a user is experiencing problems with the machine, follow the procedure below to set up the machine so the error information is saved automatically to the HDD. Then ask the user to reproduce the problem.

Switching On and Setting Up Save Debug Log

The debug information cannot be saved until the "Save Debug Log" function has been switched on and a target has been selected.

1. Enter the SP mode.
2. Press "Copy SP" on the touch-panel.
3. Enter "5", "8", "5", "7", then press #.
4. Under "5857 Save Debug Log", press "1".

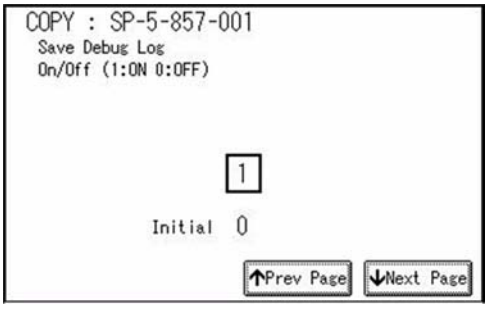

5. On the control panel keypad, press "1" then press #. This switches the Save Debug Log feature on.

Note

- The default setting is "0" (OFF). This feature must be switched on in order for the debug information to be saved.

6. Next, select the target destination where the debug information will be saved. Under "5857 Save Debug Log", touch "2 Target", enter "2" with the operation panel key to select the hard disk as the target destination, then press #.

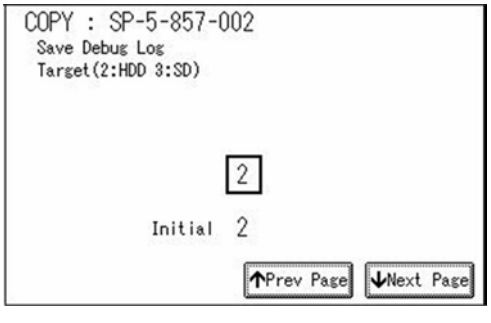

Note

- Select "3 SD Card" to save the debug information directly to the SD card if it is inserted in the service slot.

7. Now touch "5858" and specify the events that you want to record in the debug log. SP5858 (Debug Save When) provides the following items for selection.

1	Engine SC Error	Saves data when an engine-related SC code is generated.
2	Controller SC Error	Saves debug data when a controller-related SC Code is generated.
3	Any SC Error	Saves data only for the SC code that you specify by entering code number.
4	Jam	Saves data for jams.

Note

- More than one event can be selected.

Example 1: To Select Items 1, 2, 4

Touch the appropriate items(s). Press "ON" for each selection. This example shows "Engine SC Error" selected.

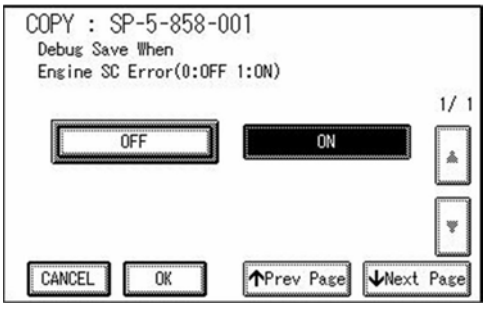

Example 2: To Specify an SC Code

Touch "3 Any SC Error", enter the 3-digit SC code number with the control panel number keys, then press #. This example shows an entry for SC670.

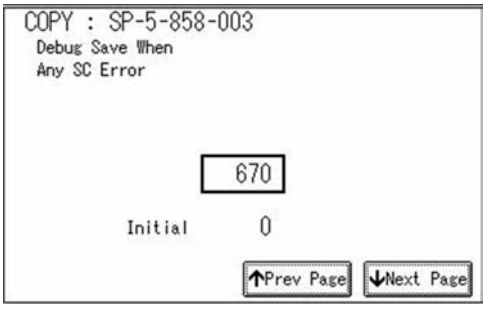

Note

- For details about SC code numbers, please refer to the SC tables in Section "4. Troubleshooting"

8. Next, select the one or more memory modules for reading and recording debug information. Touch "5859".

   Under "5859" press the appropriate key item for the module that you want to record.

   Enter the appropriate 4-digit number, then press #.

   Note

   - Refer to the two tables below for the 4-digit numbers to enter for each key.

   The example below shows "Key 1" with "2222" entered.

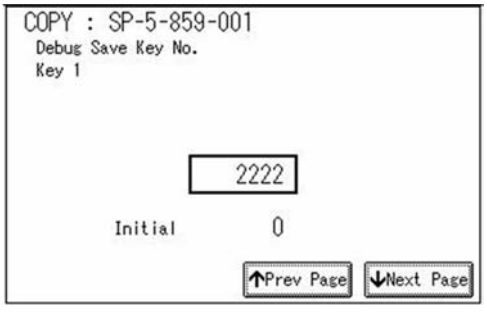

   The following keys can be set with the corresponding numbers. (The initials in parentheses indicate the names of the modules.)

4-Digit Entries for Keys 1 to 10

Key No.	Copy	Printer	Scanner	Web
1	2222 (SCS)			
2	2223 (SRM)			
3	256 (IMH)			
4	1000 (ECS)			
5	1025 (MCS)			
6	4848(COPY)	4400 (GPS)	5375 (Scan)	5682 (NFA)
7	2224 (BCU)	4500 (PDL)	5682 (NFA)	6600 (WebDB)
8		4600 (GPS-PM)	3000 (NCS)	3300 (PTS)
9		2000 (NCS)	2000 (NCS)	6666 (WebSys)
10		2224 (BCU)		2000 (NCS)

Note

- The default settings for Keys 1 to 10 are all zero ("0").

Key to Acronyms

Acronym	Meaning	Acronym	Meaning
ECS	Engine Control Service	NFA	Net File Application
GPS	GW Print Service	PDL	Printer Design Language
GSP-PM	GW Print Service – Print Module	PTS	Print Server
IMH	Image Memory Handler	SCS	System Control Service
MCS	Memory Control Service	SRM	System Resource Management
NCS	Network Control Service	WebDB	Web Document Box (Document Server)

The machine is now set to record the debugging information automatically on the HDD (the target selected with SP5-857-002) for the events that you selected SP5-858and the memory modules selected with SP5-859.

Please keep the following important points in mind when you are doing this setting:

- Note that the number entries for Keys 1 to 5 are the same for the Copy, Printer, Scanner, and Web memory modules.
- The initial settings are all zero.
- These settings remain in effect until you change them. Be sure to check all the settings, especially the settings for Keys 6 to 10. To switch off a key setting, enter a zero for that key.
- You can select any number of keys from 1 to 10 (or all) by entering the corresponding 4-digit numbers from the table.
- You cannot mix settings for the groups (COPY, PRINTER, etc.) for 006to010. For example, if you want to create a PRINTER debug log you must select the settings from the 9 available selections for the "PRINTER" column only.
- One area of the disk is reserved to store the debug log. The size of this area is limited to 4 MB.

Retrieving the Debug Log from the HDD

1. Insert the SD card into service slot of the copier.
2. Enter the SP mode and execute SP5857 009 (Copy HDD to SD Card (Latest 4 MB) to write the debugging data to the SD card.

Note

- The SD card can hold up to 4MB of data. If the debugging data is larger than 4MB, you can switch to another SD card.

3. Use a card reader to copy the file and send it for analysis to your local Ricoh representative by email, or just send the SD card by mail.

Recording Errors Manually

Since only SC errors and jams are recorded to the debug log automatically, for any other errors that occur while the customer engineer is not on site, please instruct customers to perform the following immediately after occurrence to save the debug data. Such problems would include a controller or panel freeze.

Note

- In order to use this feature, the customer engineer must have previously switched on the Save Debug Feature (SP5857-001) and selected the hard disk as the save destination (SP5857-002).

1. When the error occurs, on the operation panel, press (Clear Modes).
2. On the control panel, enter "01" then hold down C/ for at least 3 sec. until the machine beeps then release. This saves the debug log to the hard disk for later retrieval with an SD card by the service representatives.
3. Switch the machine off and on to resume operation.

   The debug information for the error is saved on the hard disk so the service representatives can retrieve it on their next visit by copying it from the HDD to an SD card.

Debug Log Codes

SP5857-015: Copy SD Card-to-SD Card: Any Desired Key

This SP copies the log on an SD card (the file that contains the information written directly from shared memory) to a log specified by key number. The copy operation is executed in the log directory of the SD card inserted in the same slot. (This function does not copy from one slot to another.) Each SD card can hold up to 4 MB of file data. Unique file names are created for the data during the copy operation to prevent overwriting files of the same name. This means that log data from more than one machine can be copied onto the same SC card. This command does not execute if there is no log on the HDD for the name of the specified key.

SP5857-016: Create a File on HDD to Store a Log

This SP creates a 32 MB file to store a log on the HDD. However, this is not a completely empty file. The created file will hold the number "2225" as the SCS key number and other non-volatile information. Even if this SP is not executed, a file is created on the HDD when the first log is stored on the HDD, but this operation takes time. This creates the possibility that the machine may be switched off and on before the log can be created completely. If you execute this SP to create the log file beforehand, this will

greatly reduce the amount of time required to acquire the log information and save onto the HDD. With the file already created on the HDD for the log file, the data only needs to be recorded; a new log file does not require creation. To create a new log file, execute SP5857-011 to delete the debug log data from the HDD and then execute this SP (SP5857-016).

SP5857-017: Create a File on SD Card to Store a Log

This SP creates a 4 MB file to store a log on an SD card. However, this is not a completely empty file. The created file will hold the number "2225" as the SCS key number and other non-volatile information. Even if this SP is not executed, a file is created on the SD card when the first log is stored on the SD card, but this operation takes time. This creates the possibility that the machine may be switched off and on before the log can be created completely. If you execute this SP to create the log file beforehand, this will greatly reduce the amount of time required to acquire the log information and save onto the SD card. With the file already created on the SD card for the log file, the data only needs to be recorded; a new log file does not require creation. To create a new log file, execute SP5857-012 to delete the debug log data from the SD card and then execute this SP (SP5857-017).

Paper Library

To copy the Saved Paper Library to an SD card, use SP 5-711-102.

To copy this data from the SD card to another machine, use SP 5-711-2.

Test Pattern Printing

Printing Test Pattern: SP2109 002

Some of these test patterns are used for print image adjustments but most are used primarily for design testing.

Note

- Do not operate the machine until the test pattern is printed out completely. Otherwise, an SC may occur.

1. Enter the SP mode and select **SP2109-002**
2. Enter the number for the test pattern that you want to print and press [#].
3. When you are prompted to confirm your selection, touch "Yes" to select the test pattern for printing.
4. Touch "APL Window" to open the APL window, then select the settings for the test print (paper size, etc.)
5. Press the [Start] ( ) key twice (ignore the "Place Original" messages) to start the test print.
6. After checking the test pattern, press SP Mode (highlighted) to return to the SP mode display.
7. Touch "Exit" twice to exit the SP mode.

Test Pattern Table

These patterns can be selected with **SP2109-002**.

0	No Pattern	19	Trim Area
1	1-dot Grid Line: ch0	20	100% Coverage
2	1-dot Grid Line: ch1	21	Vertical Cross- Stitch
3	1-dot Grid Line: ch2	22	Horizontal Cross- Stitch
4	1-dot Grid Line: ch3	23	Hori. Cross- Stitch 012
5	1-dot Grid Line: ch4	24	Hori. Cross- Stitch 670
6	1-dot Grid Line: ch5	25	Horizontal Belt
7	1-dot Grid Line: ch6	26	Vertical Belt
8	1-dot Grid Line: ch07	27	Checkered Flag
9	20 mm Grid	28	Stair

10	Slant grid patter	29	Hor. Grayscale 20 mm
11	1-dot Horizontal Line	30	Hor. Grayscale 20 mm-Wht Bands
12	1-dot Vertical Line	31	Hor. Grayscale 40 mm-1
13	2-dot Horizontal Line	32	Hor. Grayscale 40 mm-2
14	2-dot Vertical Line	33	LD Ch. Power Adjst 1
15	1-dot Independent	34	LD Ch. Power Adjst 2
16	2-dot Independent	35	LD Ch. Power Adjst 3
17	4-dot Independent	36	LD Ch. Power Adjst 4
18	Crop Marks		

SMC Lists

The SMC list prints system parameters and report data.

1. Access the SP mode corresponding to the list that you wish to print.

SP5-990-1:	All (Data List)
SP5-990-2:	SP (Mode Data List)
SP5-990-3:	User Program Data
SP5-990-4:	Logging Data
SP5-990-5:	Diagnostic Report
SP5-990-7:	Non-Default (Prints only SPs set to values other than defaults.)
SP5-990-8:	NIB Summary
SP5-990-21:	Capture Log
SP5-990-22:	Printer User Program

2. Touch the "APL Window" key to access the copy mode display.
3. Select the paper size and press the "SP Mode" key to retune the SP mode.
4. Press the "Execute" key to print the list.
5. Exit SP mode.

Memory All Clear: SP5801

As a rule, you should always print an SMC Report before initializing or adjusting the SP settings. The SMC Report provides a concise list of all the SP commands and their current settings. The report can be used for reference if the service manual is not available.

Executing Memory All Clear resets all the settings stored in the NVRAM to their default settings except the followings:

SP5-811-1:	Machine serial number
SP5-907:	Plug & Play Brand Name and Production Name Setting

1. Execute SP5990 to print out all SMC Data Lists.
2. Open SP5801.
3. Press the number for the item that you want to initialize. The number you select determines which application is initialized. For example, press 1 if you want to initialize all modules.

No.	What It Initializes	Comments
1	All modules	Initializes items 2 to 16 below.
2	Engine	Initializes all registration settings for the engine and print process settings.
3	SCS (System Control Service) /SRM	Initializes default system settings, CSS settings, operation display coordinates.
8	Printer application	Initializes the printer defaults, programs registered, the printer SP bit switches, and the printer CSS counter.
11	NCS (Network Control Service)	Initializes the system defaults and interface settings (IP addresses also), the SmartNetMonitor for Admin settings, WebStatusMonitor settings, and the TELNET settings.
14	DCS	Initializes the DCS (Delivery & Receive Control Server) settings.
15	UCS	Initializes the UCS (User Directory Control Server) settings.
16	MIRS	Initializes the MIRS (Machine Information Report Service) settings.

4. Press Execute, then follow the prompts on the display to complete the procedure.
5. Make sure that you perform the following settings:

- Input all required values for the laser unit adjustment on the SMC, and then adjust the two laser units. For details, see "Laser Unit" in the chapter 3 "Replace and adjustment".
- Do the printer registration and magnification adjustments.
- Do the touch screen calibration (☛ "page 353 "Touch Panel Position Adjustment"" in the chapter "Replacement and Adjustment").
- Referring to the SMC data lists, re-enter any values, which had been changed from their factory settings.
- Execute **SP3820-001** – Manual Process Control Self Check

6. Check the print quality and the paper path, and do any necessary adjustments.

Software and System Setting Reset

Software Reset

The software can be rebooted when the machine hangs up. Use the following procedure.

Note

- This reboots the engine controller only. If this procedure does not solve the machine's hang-up error, see Correct Procedure to Turn Off the Powerto shut down the Fiery controller.

Press and hold down * # together for over 10 seconds. When the machine beeps once, release both buttons. After "Now loading. Please wait" is displayed for a few seconds, the printer window will open. The machine is ready for normal operation.

-or-

Turn the main power switch off and on.

Resetting the System

The system settings in the UP mode can be reset to their defaults using the following procedure.

1. Make sure that the machine is in the copier standby mode.
2. Press the User Tools key.
3. Hold down the "#" key and touch the "System Setting" key.
4. A confirmation message will be displayed, then press "Yes".

PM Counter

Accessing the PM Counters

Each PM part has a counter which counts up at the appropriate time. (For example, the counter for the hot roller counts up every copy, and the counter for a feed roller counts up when paper is fed from the corresponding tray.) These counters should be used as references for part replacement timing.

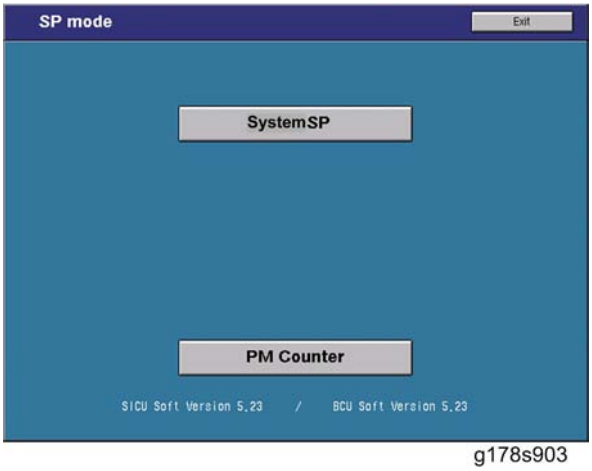

g178s903

1. Enter the SP mode.
2. Press [PM Counter] on the display.

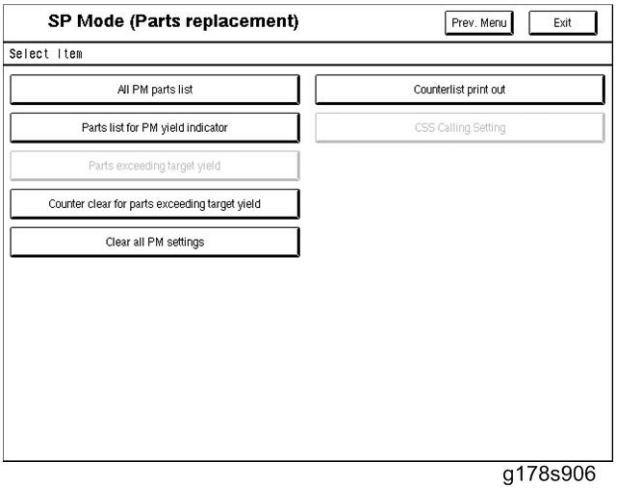

g178s906

3. The menu shown above appears on the display.

All PM Parts List

"All PM Parts List" displays all the counters for PM parts.

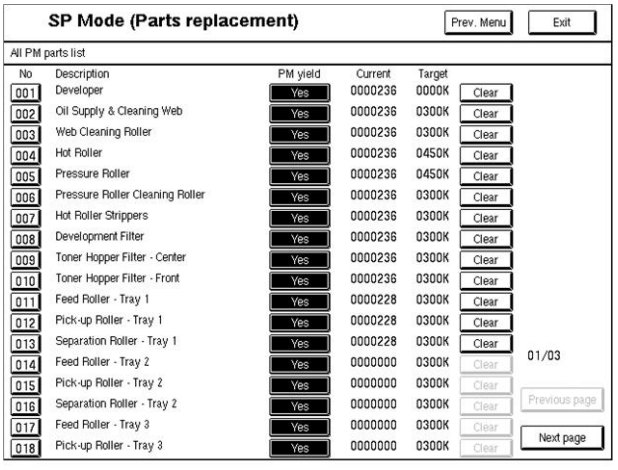

g178s904

On this screen, the current counter and the target yield of each PM part can be checked.

Additionally, the PM yield indicator setting can be changed. To change the setting press [Yes/No] key in the "PM yield" column.

When "Parts list for PM yield" is selected in the parts replacement menu, only the parts with [Yes] in the "PM yield" are listed.

To clear a counter, press [Clear] on the display. The following appears.

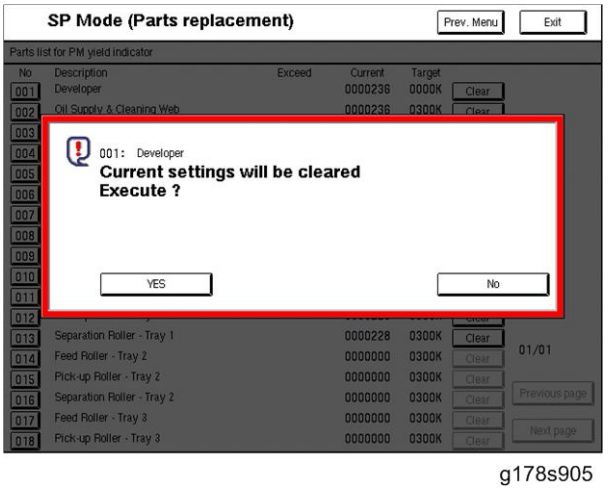

g178s905

Then press [Yes] to clear the counter.

If one of the keys in the "No" column is pressed, the following appears on the display.

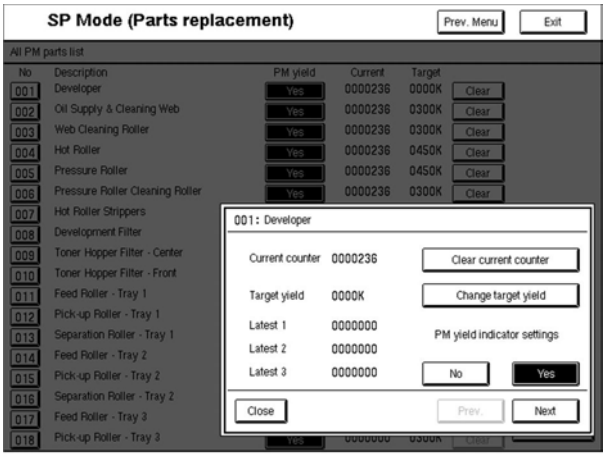

g178s907

On this screen, the records of the last three part replacements are displayed. When 'Clear current counter' is pressed, the current counter is cleared, the current counter is overwritten to "Latest 1", the Latest 1 counter is overwritten to "Latest 2", and the Latest 2 counter is overwritten to "Latest 3".

Additionally, the target yield can be changed on this screen. To change the target yield setting, do the following:

1. Press [Change target yield] on the screen.
2. Input the target yield using the ten-key pad.
3. Press the # key.

Parts List for PM Yield Indicator

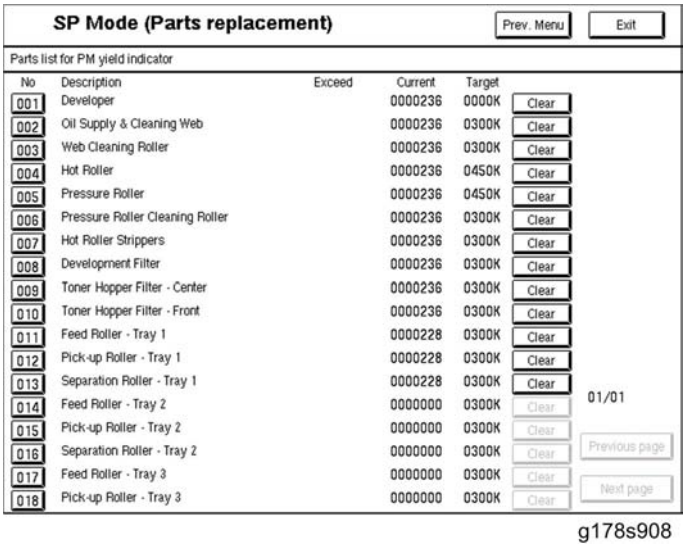

g178s908

On this screen, only the parts selected in the "All PM parts list" screen are displayed. Normally, the PM parts counters should be checked on this screen.

If the current counter exceeds the target yield, there is a * mark in the "Exceed" column.

Each counter can also be cleared on this screen. To clear all counters on this screen at once, see 'Counter Clear for Parts Exceeding Target Yield' on the next page.

Parts Exceeding Target Yield

Only the parts whose counters are exceeding the target yield are displayed. If none of the PM counters is exceeding the target yield, this item cannot be selected from the parts replacement menu.

Counter Clear for Parts Exceeding Target Yield

Clears all the counters which are exceeding the target yield. When this item is selected, the following appears on the display.

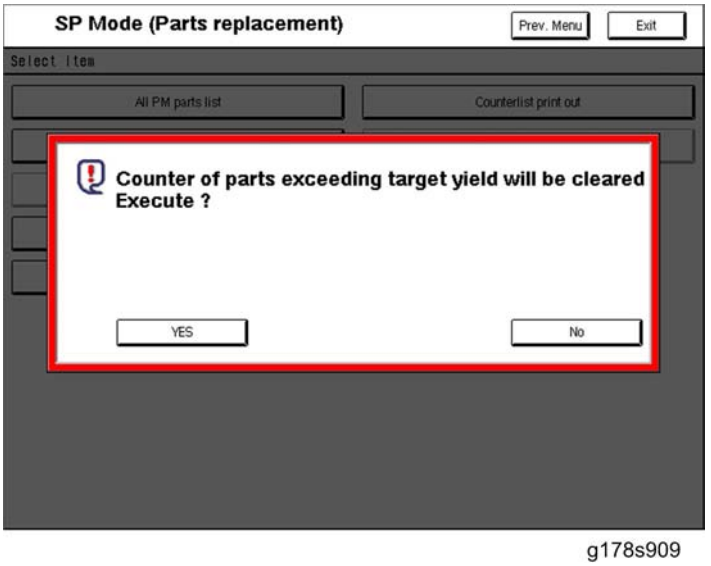

g178s909

Press [Yes] to clear the counters.

Clear All PM Settings

Clears all the PM counters and returns all the settings (PM parts list and target yield) to the defaults. When this item is selected, the following appears.

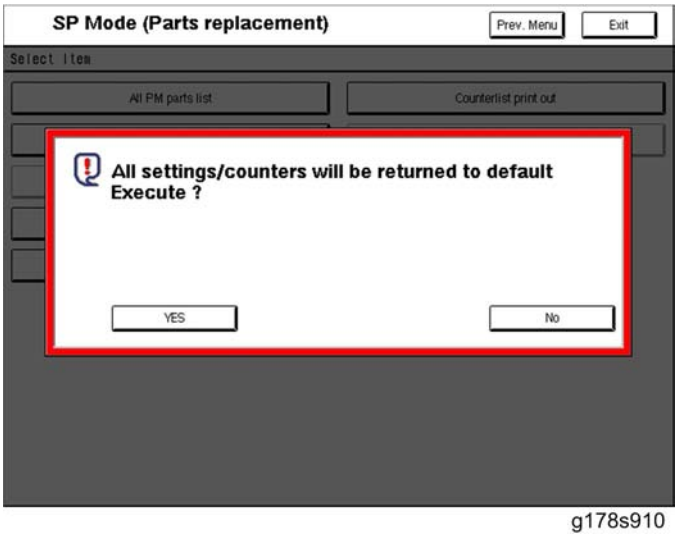

g178s910

Press [Yes] to clear the settings.

Counter List Print Out

Prints a list of all the PM part counters. When this item is selected, the following appears on the display.

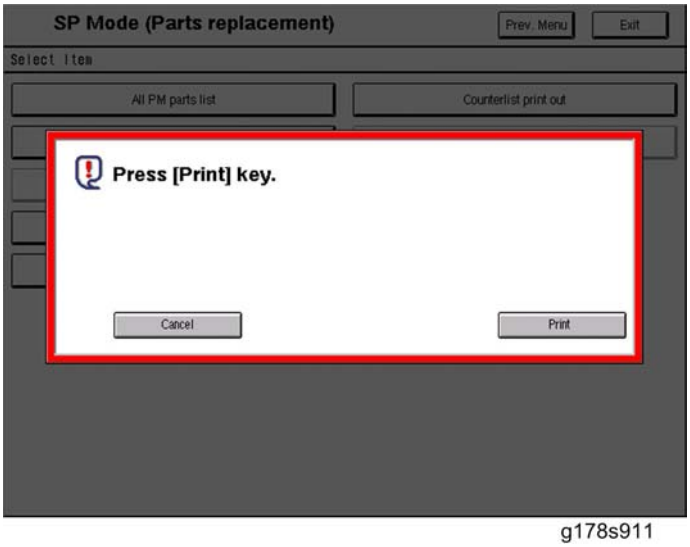

g178s911

Press [Print] to print out the counter list.

Firmware Update

Before You Begin...

Always obey these rules when handling and using SD cards:

- Never connect or remove an SD card with the machine on.
- Never turn the power off while the machine is downloading data from an SD card.
- The SD card is a precision item. Use it carefully. Do not keep the card in a location where there is high temperature, high humidity, or light from the sun.
- Handle SD cards carefully to avoid bending, scratching, or dropping them.
- If a power failure occurs during the firmware update, turn the machine power off/on without removing the SD card. The firmware update procedure should start again. (page 58 "Correct Procedure to Turn Off the Power ")

Firmware Update Procedure

1. Obtain the System SD card.
2. Disconnect the network cable and other interface cables. This prevents outside interference caused by data transfers to the machine while the software is being uploaded.
3. Turn off the machine.

   Note

   - Shut down the Fiery controller first.
4. Remove the SD card slot cover (x 1).
5. Insert the SD card into Slot 2 (upper slot).
6. Turn on the main switch.

   You will see "Please Wait" then "Preparing to start firmware update."

   The first screen appears after about 90 sec.

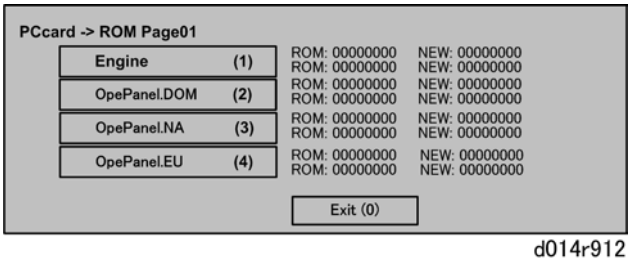

d014r912

7. Check the notations to the right.

- "ROM" tells you the module number and version of the currently installed software.
- "NEW" tells you the module number and version of software on the SD card in Slot 2.

8. Touch "Engine" or "OpePanel.xxx". The item that you select changes to dark gray.

Note

- You can select "Engine" and one "OpePanel" selection if you want to update both

9. Touch [Update] or push [#] on the 10-key pad to start the update.

While the Update Is in Progress

- Remain with the machine. Do not leave it unattended.
- The [Start] key flashes RED during firmware update, and then lights GREEN when the update is finished.
- When the [Start] key LED starts flashing rapidly, this means the update is almost finished.
- Never switch the machine off while the [Start] key is flashing RED.
- If the machine is switched off or accidentally unplugged before the update is finished, do not remove the SD card. Just switch the machine on again. The firmware update should restart automatically. If the firmware update does not recover, obtain a new System SD card.

The following screen sequence appears after selecting one "OpePanel" selected for update.

Operation Panel Update

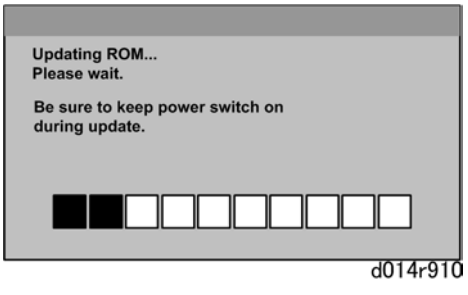

d014r910

- The blocks of the progress bar fill as the update is done.
- The update requires about 9 to 10 minutes.

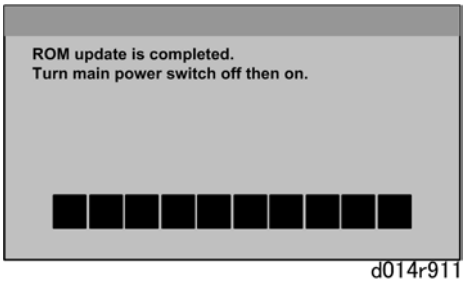

d014r911

- When you see the 'update completed' message, the firmware update is complete.

Engine Update

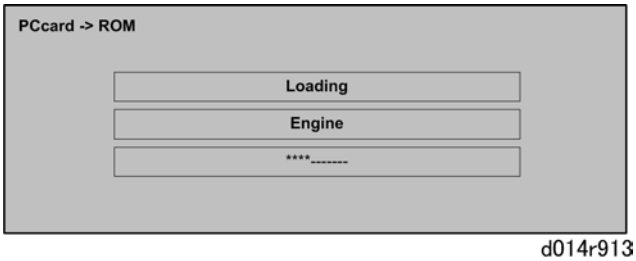

d014r913

- The middle bar tells you the name of the item that you are updating.
- The bottom bar shows the progress of the update procedure.

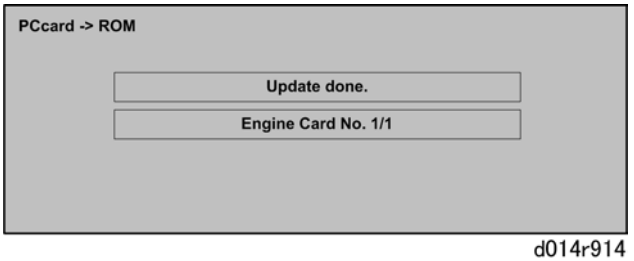

d014r914

- The update is complete when you see the "Update done" message.
- The update requires about xx minutes.

1. When you see the update completed message, turn the machine off.
2. Remove the SD card from the SD card slot.
3. Switch the machine on.
4. This completes the update procedure.

Verifying the Firmware Update

This "Verify" procedure is not necessary but is strongly recommended.

1. With the System SD card in Slot 2, turn the main power switch on. You see "Please Wait". The first screen appears after about 10 sec.
2. Touch "Firmware".
3. Select the items that you updated, and then push the [Verify] button.
4. If there are no errors the machine displays the "Verify done" message for each updated item. Go to the next step.

-or-

If you see "Verify Error" in the first bar on the screen, then you must do the procedure again for the module shown in the bottom bar. For more details, see "Errors During Firmware Update" below.

5. After the firmware is correctly updated, turn the main power switch off.

   ☛ page 58 "Correct Procedure to Turn Off the Power "

6. Push the System SD card in a small distance to release it, then pull it out of the slot.
7. Turn the main power switch on, and confirm that the machine operates correctly.

Errors during Firmware Update

If an error occurs during a download, an error message will be shown in the first line. The error code consists of the letter "E" and a number ("E20", for example).

Error Message Table

No.	Meaning	Solution
20	Cannot map logical address	Make sure the SD card is installed correctly, or use a different SD card.
21	Cannot access memory	HDD connection not correct, or replace hard disk.
22	Cannot decompress compressed data	The ROM data on the SD card is not correct, or data is damaged.
23	Error occurred when ROM update program started	Controller program defective. If the second attempt fails, replace the controller board.
24	SD card access error	Make sure the SD card is installed correctly, or use a different SD card.
30	No HDD available for stamp data download	HDD connection not correct or replace hard disks.
31	Data incorrect for continuous download	Install the SD card with the remaining data necessary for the download, then re-start the procedure.
32	Data incorrect after download interrupted	Do the recovery procedure for the module, then repeat the installation procedure.
33	Incorrect SD card version	The ROM data on the SD card is not correct, or data is damaged.
34	Module mismatch - Correct module is not on the SD card	The data on the SD is not correct. Get the correct data (Japan, Overseas, OEM, etc.) then install again.

No.	Meaning	Solution
35	Module mismatch – Module on SD card is not for this machine	SD update data is not correct. The data on the SD card is for a different machine. Get the correct data then install again.
36	Cannot write module – Cause other than E34, E35	SD update data is not correct. The data on the SD card is for a different machine. Get the correct data then install again.
40	Engine module download failed	Replace the data for the module on the SD card and try again, or replace the BCU board.
42	Operation panel module download failed	Replace the data for the module on the SD card and try again, or replace the LCDC.
43	Stamp data module download failed	Replace the data for the module on the SD card and try again, or replace the hard disk.
44	Controller module download failed	Replace the data for the module on the SD card and tray again, or replace the controller board.
50	Electronic confirmation check failed	SD update data is not correct. The data on the SD card is for a different machine. Get the correct data then install again.

Fiery Controller System Update

Fiery System Installation

System and user software are provided on the following media:

- System SoftwareDVD
- User Software DVD

The System and User Software DVDs include the system software, fonts, and user software.

You install system and user software when you:

- Remedy an error condition (see "Error messages and conditions" on page xxx).
- Replace the HDD.
- Upgrade to a more recent version of the software.

Software installation takes approximately one hour (not including the time required to configure or restore Setup).

To Install System and User Software

Important

- **Notify the network administrator at the customer site that some archived jobs may no longer print after you install an updated version of system software.**

1. If you have not yet done so, consider backing up configuration settings. The settings are deleted when you install system and user software (see "Backing up and restoring the Fiery Setup Configuration" in the "Installation and Service Guide").
2. Allow the network administrator the opportunity to print the Job Log. Also, print the following (if possible):
   - Configuration page—lists any installed options and records the customer's current Setup configuration.
   - Font List—lists the fonts currently on the HDD. In addition to the fonts provided in system software, the customer may have installed other fonts.
3. Remove all USB storage devices and dongles (if any) that may be connected to any Fiery controller USB ports.

   Important

   - **The system will hang if USB storage devices or dongles are connected to Fiery controller USB ports during software installation.**
4. Insert the System Software DVD into the DVD/CD-RW drive.

   Note

   - If you installed a new HDD, power on the system, insert the System Software DVD, allow the system to boot, and then proceed to step 6.
5. From the Fiery Control Panel or the copier/printer display panel (or the Start menu, if a monitor is connected), reboot the Fiery controller.

   Allow the system to shut down and reboot. Do not push any buttons during this time.
6. At the message "All data will be deleted?", select Yes.
7. When prompted, select a language.

   Wait as messages display describing the installation process.

   Note

   - This installation segment takes approximately 12 minutes.
8. At the message "System Software is copied to the system. Remove media and select OK to reboot," remove the System Software DVD, and then select OK.

   The Fiery controller reboots several times and status messages display as the installation process continues.

   Note

   - This installation segment takes approximately 12 minutes.

9. At the message "Please insert User Software to continue installation", insert the User Software DVD into the DVD/CD-RW drive.

   Note

   - If a monitor is connected (FACI), click OK to continue.

   During this process, the following installations are performed:

   - The entire contents of the System Software DVD are copied to a shared folder on the Fiery controller HDD, in e:\efi\user_sw.

     After installation, when the Fiery controller is connected to the customer's network, users can access the user software in the shared folder and install it onto client computers.

   The message "Copying User Software to Fiery shared folder. Please wait" and other messages display describing the user software installation process.

   Note

   - This installation segment takes approximately 30 minutes.

10. At the message "Setup finished. Remove CD/DVD. Press OK to reboot," remove the User Software DVD and select OK.

    If the User Software DVD does not eject automatically, wait for the system to boot completely and the following logo screen to display on the Fiery controller Control Panel, then access the Functions menu on the Fiery controller Control Panel and select Eject CD/DVD to remove the User Software DVD.

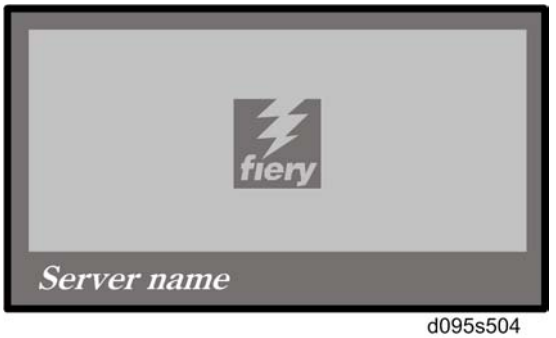

d095s504

    The drawing above indicates that the Fiery controller is idle.

    Note

    - This installation segment takes approximately 5 minutes.

11. If user documentation was previously resident on the Fiery controller, remind the site administrator that user documentation files may be reinstalled to the Fiery controller shared folder from the User Documentation CD as follows:

    - If the Fiery controller is equipped with FACI:

      – Insert the User Documentation CD in the Fiery controller DVD drive.

– Browse to the desired language folder on the CD.

– Select and copy the files you want to place in the shared folder on the Fiery controller.

– Browse to the shared file location: e:\efi\user_software\Documentation and paste the documentation files.

- From a client computer on the same network as the Fiery controller (assumes that the Fiery controller is powered on, has an IP address, and is accessible on the customer's network):

  – Insert the User Documentation CD in the CD drive of the client computer.

  – Browse to the desired language folder on the CD.

  – Open a web browser and type two back-slashes followed by the Fiery controller IP address.

  For example: \\xx.xx.xx.x, where xx.xx.xx.x is the IP address of the Fiery controller.

  – Open the User-Docs folder.

  – Copy and paste the documentation files into the folder.

12. Use the System Updates feature to install required software updates that may be available for the Fiery controller that would have been deleted when you installed system software (see "Updating the Fiery Controller" described below).
13. Reconnect any USB storage devices or dongles that you may have removed earlier.
14. Input the settings from the Configuration page that you printed earlier, or restore settings if they were backed up prior to system software installation.

    If a backup file of the configuration settings exists, restore it after the network configuration is completed (see see "Backing up and restoring the Fiery Setup Configuration" in the "Installation and Service Guide").

    Bypass any settings that are not included on the Configuration page if it is more appropriate for the network administrator to set them. For more information, see Configuration and Setup on the User Documentation CD.
15. Reinstall fonts or custom simulations that may have been deleted when you installed software.

Updating the Fiery Controller

Patch installation instructions

1. Make sure the Fiery controller is idle.
2. Execute "____exe" and follow the instructions in the Fiery Patch Downloader.
3. Notes about the Fiery Patch Downloader
   - a) Login must be admin. This is fixed and cannot be modified.
   - b) Password is the Fiery administrator login password.
   - c) Hostname can be either the IP address or the Fiery server name.

4. After the patch is downloaded, and when prompted by the Fiery Patch Downloader, choose Reboot. (If you choose to Restart later, make sure that you manually reboot the server for changes to take effect.)
5. Wait until the Fiery controller comes to Idle and print the configuration page.
6. Verify that the System Updates Log section contains the patch number "********".

6. Troubleshooting

Program Download

Overview

Here are some important points to keep in mind when downloading software:

- If an error interrupts download processing, the machine cannot operate normally with the program software only partially downloaded.
- When download processing execution starts, "Downloading ..." is displayed and when downloading has completed successfully, the message is cleared.
- If the download is interrupted when the "Downloading ..." message is displayed, the machine does not attempt a re-try.
- The program that downloads firmware from an SD card is part of the GW controller software. If downloading this software is interrupted, the program stored in the machine may be corrupted. Because of this, it may not be possible to restart the downloading program. (In addition, if the GW controller software cannot be downloaded, other software on other SD cards cannot be downloaded.) However, it may be possible to restart the program without replacing the board by setting DIP SW 1 on the controller to ON, and re-starting.

Recovery Methods

When an error occurs during downloading, an error code is displayed on the operation panel.

- If the download procedure can be re-started, re-start the download procedure.
- If the download procedure cannot be downloaded for other than the GW controller, replace the board where the downloaded program is stored.
- If the download procedure cannot be downloaded for the GW controller, set DIP SW 1 to ON. Power the machine off and on to start the downloading program. After downloading has completed, set the DIP SW to OFF then power the machine off and on again.

  ☛ page 58 "Correct Procedure to Turn Off the Power "

Download Error Codes

	Display	Details	Recovery
01	Reboot after card insert E01. Module ID Card No. xx/xx	Controller ROM update error 1	Use the correct card
		When the update break data is stored in NVRAM, the break module information and the decompression module capable of writing do not match.	
02	Download Error E02 Power off/on	Controller ROM update error 2.	Cycle the machine off/on to rewrite
		Error occurs during ROM update program initialization.	
03	Download Error E03 Power off/on	Controller ROM update error 3	Cycle the machine off/on Install the missing ROM DIMM
		The ROM for the write operation does not exist.	
04	Download Error E04 Power off/on	Controller ROM update error 4	Cycle the machine off/on Set DIP SW 1 to ON and retry Replace RAM DIMM Replace controller board
		GZIP data confirmation fails. (CRC value check)	
05	Download Error E05 Power off/on	Controller ROM update error 5	Cycle the machine off/on Set DIP SW 1 to ON and retry Replace RAM DIMM Replace controller board
		Error occurs when writing to the device.	
06	Download Error E06 Power off/on	Controller ROM update error 6	Turn the machine power off/on. Set controller DIPSW-1 to ON to force the machine to write to ROM. If you cannot force the machine to write, replace the controller board.
		CPU clock error.	

	Display	Details	Recovery
19	Download Error E19 Power off/on	Controller ROM update error 7	Software defective
		Schedule data is unclear.	
20	Down Error E20 Power Off/On	System error 1 (+SC991)	Cycle the machine off/on and re-try Replace controller board
		The physical address cannot be mapped. Software/hardware is defective	
21	Download Error E21 Power Off/On	System error 2 (+SC991)	Cycle the machine off/on and re-try. Replace RAM Replace the controller board
		There is not sufficient memory to download.	

	Display	Details	Recovery
22	Download Error E22 Module ID Card No xx/xx	System error 3 (+SC991)	Cycle the machine off/on and re-try. Replace card Replace controller board
		Data fails to decompress. Card defective.	
	SC991	System error 4	Cycle the machine off/on and re-try Set DIP SW 1 to ON and re-try Replace the controller board
		"Selfupdate" does not execute. Software defective.	
23	Download Error E24 Power Off/On	System error 5	Cycle the machine off/on and re-try Replace the card Replace the controller board
		Card read/write error. Software or card defective.	
30	No Valid Data E30	Download dysfunction 1	HDD defective HDD harness disconnected, defective
		Print download is not possible. Cannot download to HDD because HDD not installed or defective.	

	Display	Details	Recovery
31	Reboot After Card Insert E31 Module ID Card No. xx/xx	Download dysfunction 2	Set the correct cards in the correct order
		Download continuity error with more than one card. The second or later card is not compatible.	
32	Reboot After Card Insert E32 Module ID Card No. xx/xx	Download dysfunction 3	Use the correct card If power failure caused the failure, remove the card and insert another.
		Download interrupted because card is not correct, or power failure interrupted download.	
33	No Valid Data E33	Download dysfunction 4	Use the correct card
		Card version error. Attempted to download program using a card with the wrong version number.	
34	No Valid Data E34	Download dysfunction 5	Use the correct card
		Specification error. DOM card set in EXP machine, or vice versa.	
35	No Valid Data E35	Download dysfunction 6	Use the correct card
		Wrong model. The inserted card is for another model.	
36	No Valid Data E36	Download dysfunction 7	Use the correct card, inserted correctly Install a ROM DIMM if none is installed
		Module error. The program that you are attempting to download does not exist on the machine, or the contact points at the card and the machine slot are not connected.	
37	No Valid Data E37	Download dysfunction 8	Use an unused card
		Edit option card error. You attempted to employ a used card.	
40	Download Error E40 Module ID Card No. xx/xx	Download result failure 1	Cycle the machine off/on and re-try
		Engine download failure.	

	Display	Details	Recovery
41	Download Error E41 Module ID Card No. xx/xx	Download result failure 2	Cycle the machine off/on and re-try
		Fax download failure.	
42	Download Error E42 Module ID Card No. xx/xx	Download result failure 3	Cycle the machine off/on and re-try
		Operation panel or language download failed. For this error, sometimes the message may not be displayed.	
43	Download Error E43 Module ID Card No. xx/xx	Download result failure 4	Cycle the machine off/on and re-try
		Print download failed.	
44	Download Error E44 Module ID Card No.	Download result failure 5	Turn the machine power off/on. Replace the SD card with the start-up SD card that has the source data Set controller DIPSW-1 to ON to force the machine to write If you cannot force the machine to write, replace the controller board.
		The data targeted for the write operation could not be accessed.	
50	No Valid Data E50	Download invalid	Use the correct SD card.
		The source data for the update could not be authenticated.	
51	(no display)	Remote ROM update failure 1	Turn the machine power off/on and try again.
		The source data for the ROM update is corrupted because the machine is operating and an SC code has been issued.	

	Display	Details	Recovery
52	(no display)	Remote ROM update failure 2	Try again with the correct data.
		The source data received for the ROM update is corrupted; it failed a SUM check due to its abnormal length.	
53	(no display)	Download result failure 6	Do the download procedure again.
		The previous download in progress was cancelled.	

Special Procedures

SP3812 001 (Devsetup Execute) Errors

After **SP3812 001** executes normally, you should see four 1s:

1111

Reading from left to right, each "1" indicates the status of the PCDUs: K, M, C, Y.

If you see any number other than a "1", this indicates an error.

SP3812 001 Error Codes

Code	Error	Problem	Recovery
2	Execution Interrupted	Door was opened, or another color returned an error. Execution halts at the first error encountered or if the front door is opened during execution.	Check the preceding error codes. Never open the front door during execution.
3	Vt Abnormal	The reading of Vt (TD sensor output) is less than 5 V.	Check the operation panel for a developer set error (SC336 to SC339). Check the PCDUs and confirm that all the film seals have been removed to release the developer from the developer cartridge.
4	Did Not Execute	SP Default	Displayed when you open this SP code. No action is necessary.
8	Toner Supply Abnormal	At the end of the toner filling cycle, the toner end sensor detected no toner.	Check the toner supply unit.

9	Vtcnt Abnormal	Vtref (control reference voltage) could not be adjusted to within 0.2 V of Vt (TD sensor output).	This is a TD sensor adjustment error (SC372 to SC375). Execute SP3801 again for the PCDU that returned the error. If this does not recover operation, check the following: Film seal not removed from a new developer pack TD harness sensor disconnected, loose or defective TD sensor defective Harness between TD sensor and drawer disconnected, defective

Process Control Troubleshooting

Summary of Process Control SC Codes

This is a list of SC codes that may occur during process control. For more, please refer to the process control tables on the following pages.

Pre-Processing Check	
SC316 to SC319	Vpp is not within the normal range (Vpp: the AC current applied to the charge roller to compensate for changes in the ambient temperature and humidity). Insufficient charge causes white spotting and too much charge causes toner to film on the surface of the drum. Vpp must be > 2.8 kV.
SC400	ID sensor could not be calibrated. An abnormal ID sensor condition is detected when before calibration begins, Vsg < 0.5V or after calibration, Vsg cannot be adjusted to 4.0±0.2V.
SC418	Correct current could not be supplied to the ID sensor.
SC436 to SC439	A problem is detected with a potential sensor during calibration.
Potential Control	
SC410 to SC413	The development gamma is out of range (not between 0.3 and 6.0) for a color.
SC414 to SC417	Vk is out of range (not within ±150V) for a color. If the development potential is less than Vk, toner is not applied to the drum.

SC420 to SC423	Vd cannot be adjusted to the target voltage for a drum.
SC424 to SC427	The potential sensor detects that Vpl is not ±10V of the target Vpl after exposure of the ID sensor patterns.
SC432 to SC435	The residual voltage on a drum is greater than -200V.
TD Sensor Output Calibration	
SC360 to SC367	An abnormal condition is detected when output of one of the TD sensors fails to fall within the range of 0.5V to 4.5V.
Process Control Gamma Correction	
SC410 to SC413	The development gamma for black, magenta, cyan, or yellow is not within range (0.3 to 6.0).
SC414 to SC417	The development start voltage (Vk) for black, magenta, cyan, or yellow PCDU is not within range (±150V)

Process Control Self-Check: SP3821

After the process control self-check is executed manually with SP3820, you can execute **SP3821** to check the results of the self-check. The possible error codes are listed in the "Displayed Code" column in the table below.

When you do **SP3821**, the normal display (no errors) will look like this:

```
10101010
```

Reading from left to right each "10" represents a color: K, C, M, Y.

If a problem occurs, the code will appear in the column for the color PCDU where the error has occurred. For example, If a Vdhome error (Code 15) (see table below) occurs in the M PCDU, the display will look like this:

```
10151010
```

Or if an ID sensor error (Code 21) (see table below) occurs in the Y PCDU:

```
10101021
```

"99" displays while SP3821 executes.

Important

- Noise and static electricity can damage the many sensors that are used during the process control self-check. Because of this, always turn the machine off before doing any procedure described below that requires disassembly.

Normal

Displayed Code	Item	Major Cause
10	Successful	---

Potential Sensors

Displayed Code	Item	Major Cause
15	VdHome Error 1 (SC436 to SC439)	VdHome (SP3572) above –900V. • The window of the potential sensor probe fouled with toner • Potential sensor damaged
	Action: • Do SP2260-001 to check the function of the potential sensor. • Do SP2261 to check the Voffset readings. If Voffset is over 1V, the potential sensor might be dirty due to scattered toner. • Remove the PCDU. Use a blower brush to clean the window of the potential sensor probe, then check the sensor again with SP2601. • If normal operation cannot be restored, replace the potential sensor probe.	

Displayed Code	Item	Major Cause
16	VdHome Error 2 (SC436 to SC439)	VdHome (SP3572) below –500V. • Potential sensor relay board damaged • Drum abnormal • Drum motor not operating
	Action: • Do SP2260 001 to check the function of the potential sensor. • Do SP2261 to check the Vd reading. For more, see Section 6. This error occurs again if Vd is less than -500V. • Remove the malfunctioning PCDU with a functioning PCDU, turn the machine off then on, then do the potential sensor check again. • If the replaced PCDU does not function normally, then the problem is on the machine side, or the potential sensor relay board is malfunctioning. • If the replaced PCDU functions normally, then there may be a problem with the drum or the charge unit. Replace the PCDU.	

ID Sensors

Displayed Code	Item	Major Cause
21	ID Sensor Vsg Adjust Error (SC400)	Vsg_reg (SP3121) is out of range (not within 4.0 ±0.2V). • ID sensor fouled with dust, toner • ITB undulating or out of position
	Action: • Remove the ITB unit. • Make sure the belt is mounted correctly. • Clean the windows of the ID sensors with a cloth moistened with alcohol. • Be sure to wipe the sensor apertures with a wet cloth. A dry cloth may generate static which can attract dust.	

Displayed Code	Item	Major Cause
22	ID Sensor LED Current Error (SC418)	LED PWM (SP3131) greater than 400. • ID sensor fouled with dust, toner • ID sensor deteriorated
	Action: • Remove the ITB unit and check the ID sensors. • Clean the windows of the ID sensors with alcohol and a clean cloth. • Be sure to wipe the sensor apertures with a wet cloth. A dry cloth may generate static which can attract dust. • If the apertures are clean, then the LED of an ID sensor may have deteriorated. Replace the ID sensor plate.	
23	ID Sensor Output Error (SC400)	Vsg_reg (SP3121) less than 0.5V. • ID sensor harness loose, disconnected, damaged • ID sensor damaged **Note:** Vsg_reg refers to the reading of the ITB surface done with the direct reflection sensors in both the color and black ID sensors.
	Action: • Remove the ITB unit. • Check the ID sensor harness connections and make sure that they are tight. • Check the harnesses for breaks. • If the harnesses are undamaged and tightening the connections does not solve the problem, replace the ID sensor plate.	

AC Charge

Displayed Code	Item	Major Cause
31	AC Charge Adjust Error 1	Vpp could not be adjusted after 20 attempts. • Bias path defective • Charge gap abnormal (too large) • Charge roller dirty • Drum coated with film
	Action: • Make sure that the bias path and drum are grounded correctly. • Check the drum and both ends of the charger roller for any foreign matter. • Check the gap between the charge roller and the drum to confirm that it is not too large. • If the grounds and gap is normal, clean the charger roller or replace it.	
32	AC Charge Adjust Error 2	Vpp greater than 2.80 kV. • Bias path defective • Charge gap abnormal • Charge roller dirty, defective
	Action: • Make sure that the bias path and drum are grounded correctly. • Check the drum and both ends of the charger roller for any foreign matter. • Check the gap between the charge roller and the drum to confirm that it is not too large. • If the grounds and gap is normal, clean the charger roller or replace it.	

ID Sensor Pattern Detection

Displayed Code	Item	Major Cause
55	Development Gamma Error 1 SC410 to SC413	Development gamma (SP3561) greater than 6.0 (mg/cm2/-kV).
	Action: • Switch the machine off and on then do SP3820-002. • Do SP3561-005 to -008 to confirm that development gamma is within the target range (-0.1 to +0.1) • If not within the target range, do the procedure again. If the machine returns SC410 to SC413 and process control does not end normally, do this procedure: 1. Change the settings for SP3301-001 to -004 from "0" (PID) to "1" (No Toner Supply). 2. Do SP2109-002 and select Pattern 12. 3. Change the settings of SP2109-005 to -008 from "15" to "0", except for the color which showed a development gamma error. 4. Return to the print window and do the test print at least 10 patterns. 5. Do SP3820-002. 6. If the patterns are normal, do Steps 2 and 3. 7. If the patterns are not normal, repeat Steps 2 to 5. 8. Do SP3301-001 to -004 to restore PID toner supply.	
56	Development Gamma Error 2 (SC410 to SC413)	Development gamma (SP3561) less than 0.3 (mg/cm2/-kV) • Toner shield glass dirty

Displayed Code	Item	Major Cause
	Action: 1. Do SP2109-002 and select Pattern "12". 2. Do SP2109-005 to 008 and change the settings of these SP codes from "15 (default)" to "0". 3. Return to the print window and do the test print 1 pattern. 4. Check the pattern to determine whether the image density is extremely light. 5. Turn the machine off. 6. Open the toner hopper door, remove the toner bottles and check the toner shield glass for dirt. 7. Remove the face plate, replace the malfunctioning PCDU with a functioning PCDU, then turn the machine on and repeat Steps 1 to 3 to print the coverage test pattern. 8. If normal operation cannot be recovered:	
	• Replace the image transfer power pack. • Open the development unit to see if there is too much or too little developer. • If the developer supply is normal, remove the toner end sensor to see if there is toner in the sub hopper. • If the sub hopper is empty, the powder pump is defective. Replace the toner supply unit. • If the sub hopper is full, the toner end sensor is defective. Replace the toner supply unit. • If the level of developer is either too high or too low, replace the developer.	
57	Vk Error 1	Vk (development start voltage) greater than 150V.
	Action: Replace the developer.	

6

Displayed Code	Item	Major Cause
58	Vk Error 2	Vk (development start voltage) less than −150V. • The window of the potential sensor probe is covered with toner. • Potential sensor damaged
	Action: 1. Do SP2260-001 to check the function of the potential sensor. 2. Do SP2261 to check the Voffset readings. If Voffset is over 1V, the potential sensor might be dirty due to scattered toner. 3. Remove the PCDU. Use a blower brush to clean the window of the potential sensor probe, then check the sensor again with SP2260-001. 4. If normal operation cannot be recovered, replace the potential sensor probe. 5. If the Voffset reading is normal, replace the developer.	
59	Insufficient Active Data	Not enough active data to calculate development gamma (only "0" or "1").
	Action: Do the "Action" procedure for code "55" described above.	

Potential Adjustment

Displayed Code	Item	Major Cause
61	LD Failure	A laser diode failed to fire and write the ID sensor pattern. • Toner shield glass dirty • PCDU set incorrectly • Laser diode defective
	Action: 1. Print the color test pattern to determine which color is abnormal. 2. Turn the machine off. 3. Check the dust shield glass for the laser unit. For details, see "Dust Shield Glass" in the chapter "Replacement and Adjustment". 4. Reassemble the machine, switch the machine on, then do SP3820-001. **Notes:** • The probes of the potential sensors of each PCDU are located at different positions. This failure can be caused by installing a potential sensor at the incorrect position. However, you can eliminate this as a cause if a new PCDU is installed. (A guide ensures prevents a PCDU from being installed at the wrong location.) • If the machine fails to return SC240 to SC243, you can eliminate a defective LD as the cause of the problem.	
62	Vr Error	Vr (residual voltage) greater than –270V. • Drum deteriorated • Toner shield glass dirty
	Action: • Open the front door, remove the toner supply unit, and check the toner shield glass for dirt. • Clean the glass then do SP3820 001. • If this does not solve the problem, replace the drum.	
63	Vd Adjust Error	Vd could not be adjusted within ±5V. • Drum defective
	Action: • Replace the drum.	

6

Displayed Code	Item	Major Cause
64	Vpl Adjust Error	Vpl could not be adjusted within ±3V. • Drum deteriorated due to filming
	Action: • Replace the drum.	

Abnormal End

Displayed Code	Item	Major Cause
90	Potential Adjust Error	SP3501 (potential control method) is set to 1 (Fixed).
	Action: Do SP3501-001 and select "0" (Auto).	
99	Forced Termination	Door open, power off, or other problem interfering with process control self-check.
	Action: • Make sure the machine is turned on. • Make sure the front door is closed completely.	

MUSIC Adjustment Result

SP2-194-010 to -012 (MUSIC Execution Result M/C/Y Error)

This SP shows the number as a MUSIC result on the LCD. It shows which color has an error (M, Y or C).

No.	Result	Description
0	Not done	MUSIC has not been done.
1	Completed successfully	MUSIC has been done correctly.
2	Cannot detect patterns	ID sensors have not detected the patterns for MUSIC.
3	Fewer lines on the pattern than the target	The patterns detected by the ID sensors are not complete enough for MUSIC.

No.	Result	Description
4	More lines on the pattern than the target	Not used in this machine.
5	Out of the adjustment range	ID sensors have correctly detected the patterns for MUSIC, but the position of the patterns is too far away from the adjustable range.
6-9	Not used	-

Fiery Controller Troubleshooting

For details about Fiery controller troubleshooting, refer to the "Installation and Service Guide" of the Fiery controller.

Service Call Conditions

See the Appendices for the following information:

- Service Call Tables

Image Problems

White Spots

If many white spots occur on outputs, clean the following paper paths and rollers with a cloth and alcohol.

- Mylar at the PTR timing roller
- Vertical transport path from trays 1 and 2
- Paper path from the LCT-MF or optional LCT

Mylar at the PTR Timing Roller

1. Pull out the registration unit (☛page 463).

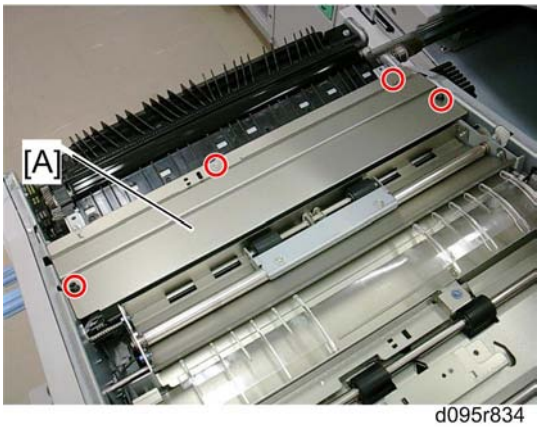

d095r834

2. Remove the timing roller cover [A] on the PTR timing roller (🔩 x 4).

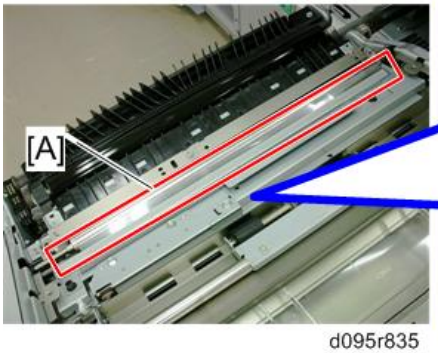

d095r835

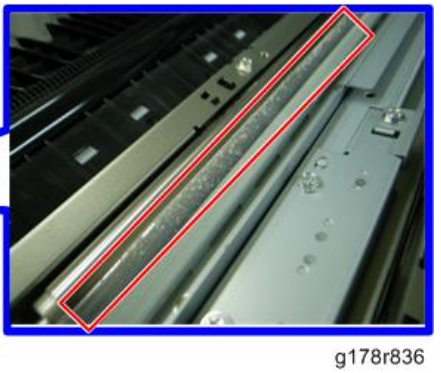
g178r836

3. Clean the mylar [A] and other rollers in the registration unit with a cloth moistened with alcohol.

Vertical Transport Path from Trays 1 and 2

1. Open the front right door.

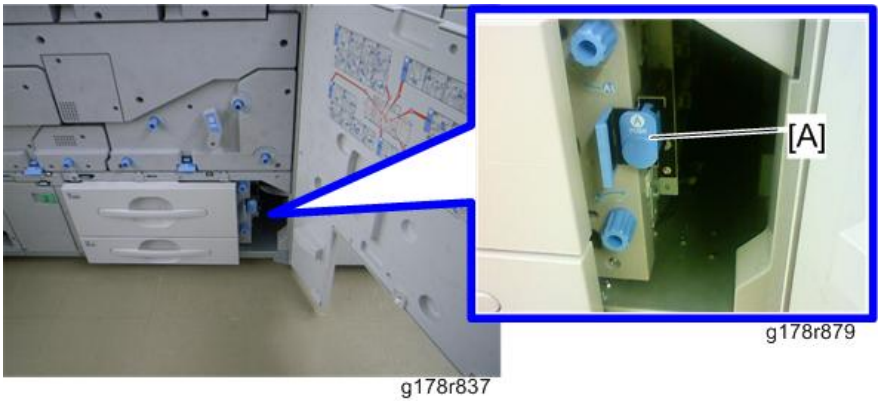

2. Open the vertical transport guide [A].
3. Clean the vertical transport path with a cloth moistened with alcohol.

Paper Path from the LCT-MF or Optional LCT

1. Open the front left door of the LCT-MF.

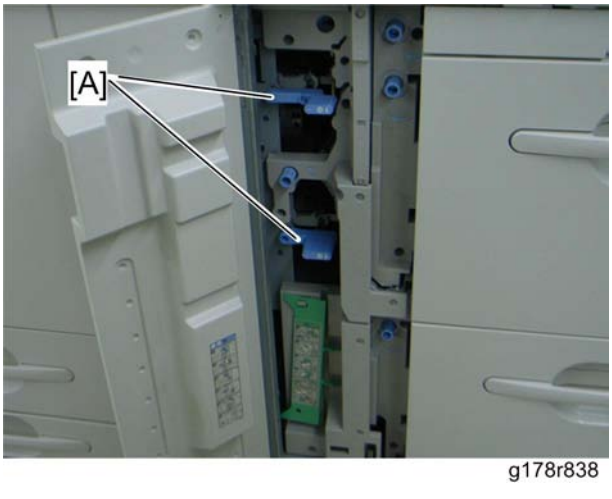

2. Open the vertical transport upper and lower guides [A].
3. Clean the vertical transport upper and lower paths with a cloth moistened with alcohol.

g178r839

- Use an aerosol spray for places where you cannot touch, as shown above.

Color Spots

If color spots occur on outputs, print out 150 to 200 copies of a test pattern (SP2109-002) with a full coverage image.

For Printer M077

1. Enter the SP mode.
2. Select "20: 100% Coverage" with SP2109-002.
3. Select all color (YMCK) with SP2-109-004 as shown below.

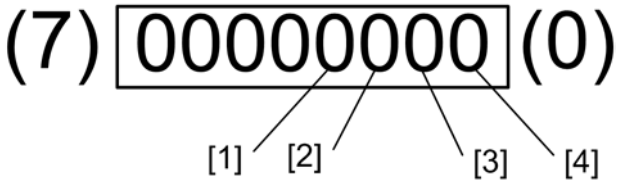

g178r691

"0": Not selected, "1": Selected

- [1] for **"Black"**. Press the "**3**" key on the operation panel if you want to select this color.
- [2] for **"Cyan"**. Press the "**2**" key on the operation panel if you want to select this color.
- [3] for **"Magenta"**. Press the "**1**" key on the operation panel if you want to select this color.
- [4] for **"Yellow"**. Press the "**0**" key on the operation panel if you want to select this color.

4. Press the "APL Window" button to enter the copy screen.
5. Print a test pattern 150 sheets or more (200 sheets or less) from a PC.
6. Check the outputs if the problem is solved. If not, try this procedure again.
7. Exit the SP mode after the machine has completed printing.

For Copier D095

1. Enter the SP mode.
2. Select "20: 100% Coverage" with SP2109-002.
3. Press the "APL Window" button to enter the copy screen.
4. Input a number of pages from 150 to 200 with the numeric keys, and then select "Full Color" mode.
5. Press the "Start" key on the operation panel.
6. Exit the SP mode after the machine has completed printing.

Blurred Image

Blurred Image due to Ozone

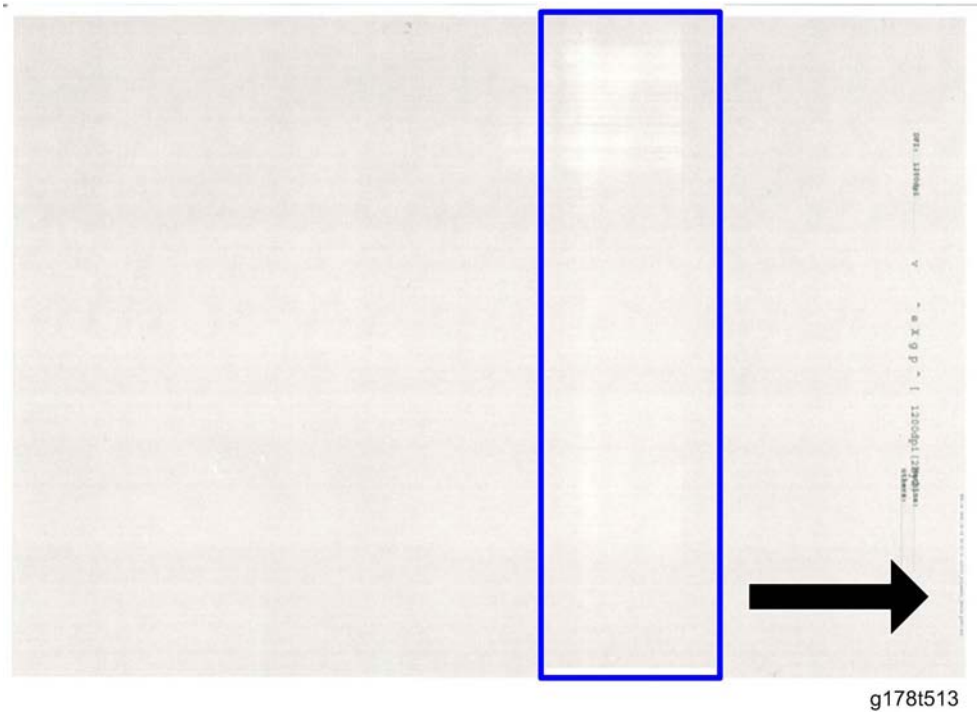

g178t513

If a blurred image (white lines and drag marks) as shown above occurs on the outputs for the first job just after turning on the machine or recovering from the low power mode, execute "Clear blurred img" with SP2810-001 or "0203:Execute photo conductor Refreshing" under the "Adjustment Settings for Operator" in the User Tools to recover from this problem.

This problem may appear at 314 mm (drum circumference) intervals on the outputs.

Blurred Text

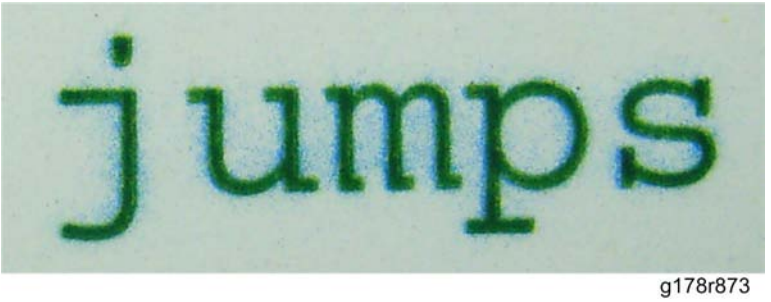

g178r873

If text on an output is blurred as shown above, the "Toner Reduction" function in the printer driver or "Fiery Command WorkStation" can solve this problem.

However, the "Toner Reduction" function may not solve this problem for some image data.

How to Enable Toner Reduction

1. Open the printer driver, and then click "Properties...".

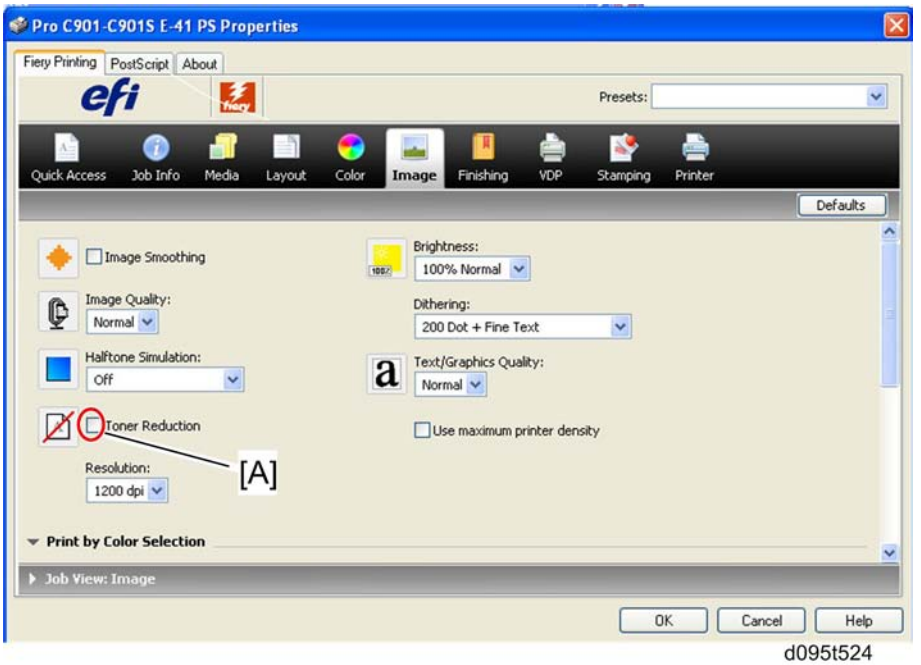

d095t524

2. Check the "Toner Reduction" check box [A].

Note

- For the "Fiery Command WorkStation", check the "Toner Reduction" check box under "Properties" in a job.

Side Effect

The color reproduction of the shadow area may be reduced.

White Lines in B/W Mode

White lines may occur on outputs in the black and white mode if an image with high black coverage is printed or copied consecutively (15% or more black coverage and 100 K or more).

If the white lines occur on outputs in the black and white mode:

1. Clean the drum for black.
2. Replace the drum cleaning unit for black.

Vertical White Line

Vertical white line may occur due to various reasons. This section shows how to decide cause of a vertical white line and solve the vertical white line problem.

Decision Flow

Check the following points, and then see each counter measure.

1. The problem output is a half-tone image and has a white line at 314 mm intervals.
    - Yes: See "1. Countermeasure for Drum Problem" described below.
    - No: Go to next check point.
2. Print out the same image which caused the white line problem again after "2. Countermeasure for Fusing Belt Error" has been done.
    - Problem is not solved: See "1. Countermeasure for Drum Problem" described below.

1. Countermeasure for Drum Problem

Symptom

- White line occurs on outputs at 314 mm interval.
- Problem point differs or problem does not occur depending on which color (YMCK) is used.

Possible Cause

- Charge error due to adhered NOx on the drum surface

Countermeasure

1. Execute "Clear blurred img" (SP2-810-001).

2. Countermeasure for Fusing Belt Error

Symptom

- Uneven glossiness occurs on outputs.
- White line occurred on outputs is thick.

Possible Cause

- Uneven surface of the fusing belt caused by the multiple printing (50 outputs or more) of a same image

Countermeasure

1. Enter the SP mode.
2. Select "20: 100% Coverage" test pattern for each color with SP2-109-002.
3. Select the following colors for printing with SP2-109-004 as shown below.

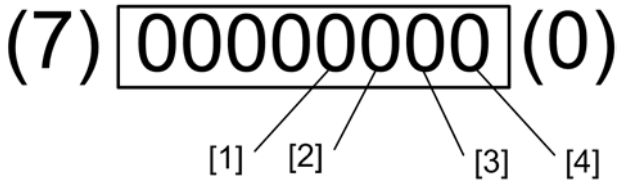

g178r691

"0": Not selected, "1": Selected

- [2] for **"Cyan"**. Press the "**2**" key on the operation panel if you want to select this color.
- [3] for **"Magenta"**. Press the "**1**" key on the operation panel if you want to select this color.
- [4] for **"Yellow"**. Press the "**0**" key on the operation panel if you want to select this color.

4. Press the "APL Window" button on the top of the LCD
5. Print a sample image 40 pages from a PC.
   - A sample page must include black color.
   - Size : A3/DLT (11x17), Duplex: on
   - Print a sample image in the largest printable size if paper sizes larger than A3/DLT such as SRA3, 12x18, 13x18, etc are to be used by a client.
6. Check the outputs if the problem is solved. If not, try this procedure again.

White Scattered Dots

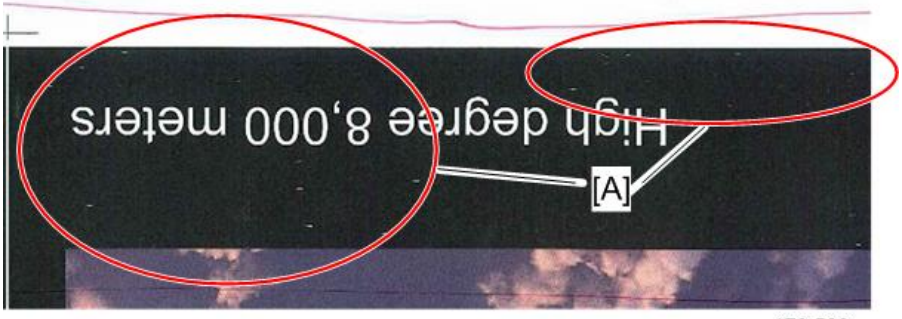

g178t529

If a white scattered dots image as shown above occurs on the outputs, do the following countermeasures.

Before doing countermeasures

1. Enter the SP mode.
2. Select "20: 100% Coverage" test pattern for each color with SP2-109-002.
   - Color select can be done with SP2-109-004 as shown below.

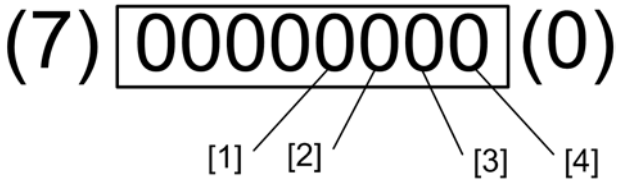

g178r691

"0": Not selected, "1": Selected

   - [1] for **"Black"**. Press the "**3**" key on the operation panel if you want to select this color.
   - [2] for **"Cyan"**. Press the "**2**" key on the operation panel if you want to select this color.
   - [3] for **"Magenta"**. Press the "**1**" key on the operation panel if you want to select this color.
   - [4] for **"Yellow"**. Press the "**0**" key on the operation panel if you want to select this color.
3. Print a sample image 40 pages from a PC.
   - A sample page must include black color.
   - Size : A3/DLT (11x17), Duplex: on
4. Check the output to decide a problem drum unit.
5. Do the following countermeasures for the problem drum unit.

Countermeasures

1. Remove the adhered silica dust on the drum surface.
2. Clean or replace the drum cleaning unit.

Black Spots at 125 mm Interval

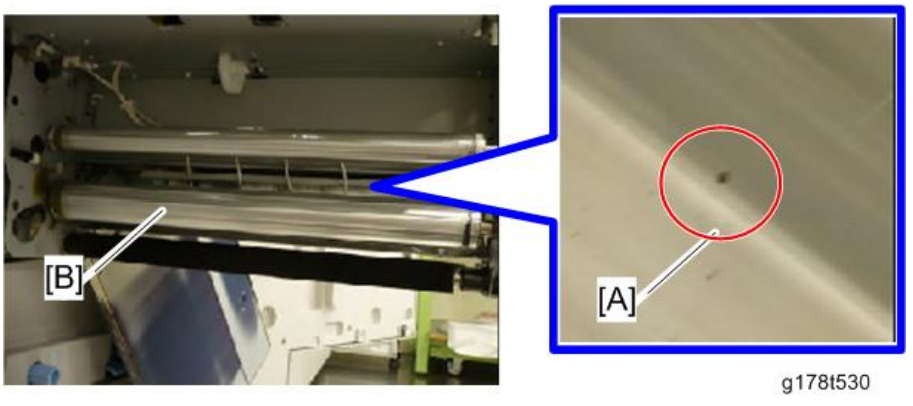

If black spots at 125 mm interval appear on the outputs, these black spots may be caused by waste toner [A] adhered on the idle roller [B] against the ITB (Image Transfer Belt) cleaning brush roller. Clean the idle roller [B] against the ITB cleaning brush roller.

Fusing Problem

Here are four common problems caused by the fusing unit. Do the following countermeasures for the each fusing problem.

Paper Wrinkles/ Worm Tracks

Sample of Worm Tracks

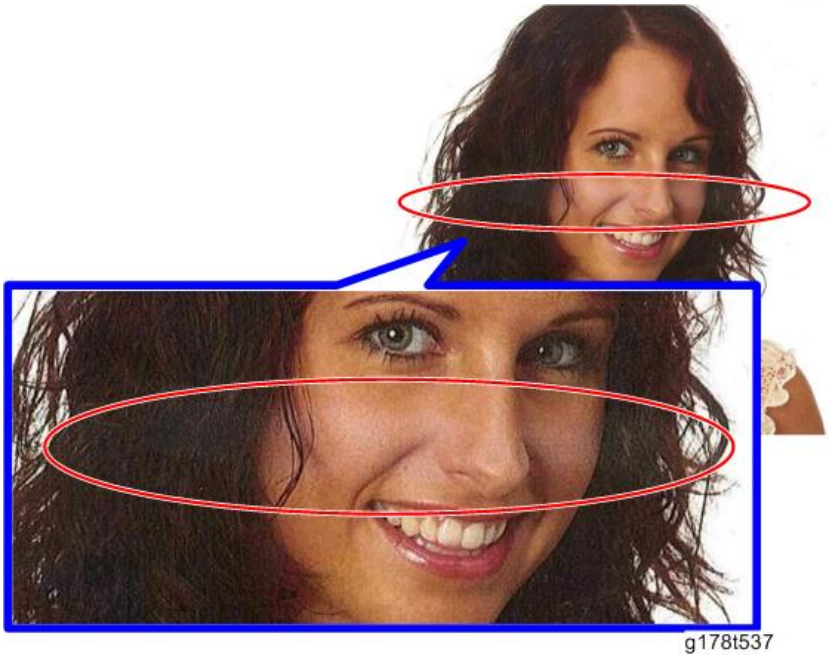

Countermeasure

- Decrease the fusing motor speed with SP1909.

Note

- If the fusing speed is decreased too much, SC524 may occur.

Paper Problems

Consecutive JAM 38 (C JAM)

If JAM 38 occurs consecutive times for Thick paper printing (Paper size: LT/ A4 SEF, Paper weight: 250 to 350 g/m^3), change the paper orientation from SEF to LEF.

- Jam code 38: This is detected when the fusing exit sensor does not detect paper after the prescribed time has passed.

Note

- If less flexible thick A4/LT SEF paper is used, a sheet [A] of paper may be stopped between the paper transfer roller [B] and the fusing rollers [C]. This is because the sheet [A] of paper hangs on the PTR exit guide [D] and the fusing entrance guide [E] and the paper transfer belt [F] does not move the sheet of paper to the fusing rollers after it has been fed from the paper transfer roller. As a result, JAM38 can occur. Changing the paper orientation from SEF to LEF can improve this.

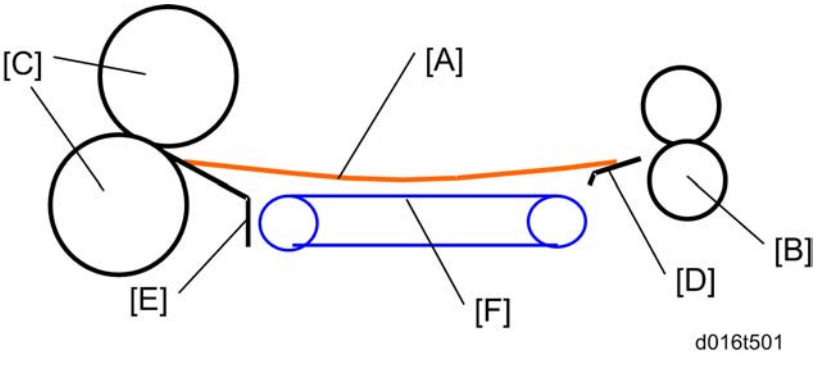

[A]: Thick paper (SEF)

[B]: Paper transfer roller

[C]: Fusing rollers

[D]: PTR exit guide

[E]: Fusing entrance guide

[F]: Paper transfer belt

Color Paper and Preprinted Paper

If color paper or preprinted paper is used for this machine, the CIS adjustment function may not work properly for adjusting the side-to-side registration. In this case, the side-to-side registration adjustment is done with the following procedure.

1. Disable the side-to-side registration adjustment by CIS with "0105:Skew Detection" and "0104:Auto Image Position Adjustment Across Feed Direction" (under "Adjustment Settings for Operator" in the User Tools) for the paper feed tray.
2. Print a sample, and then adjust the side-to-side registration with SP2-113 or "0102:Adjust Image Position Across Feed Direction" (under "Adjustment Settings for Operator" in the User Tools) for the paper feed tray.

Small Size Paper

If small size paper (paper width: 139.7 to 147 mm) is used and the printed image is shifted 2 to 3 mm from the center of a printout, the CIS adjustment function may not work properly for adjusting the side-to-side registration. In this case, the side-to-side registration adjustment is done with the following procedure.

1. Disable the side-to-side registration adjustment by CIS with "0105:Skew Detection" and "0104:Auto Image Position Adjustment Across Feed Direction" (under "Adjustment Settings for Operator" in the User Tools) for the paper feed tray.
2. Print a sample, and then adjust the side-to-side registration with SP2-113 or "0102:Adjust Image Position Across Feed Direction" (under "Adjustment Settings for Operator" in the User Tools) for the paper feed tray.

Double Feed Problem from LCT (Main and Option)

If double feed occurs several times when paper is fed from an LCT (tray 3, 4, 5, or 6), try the following countermeasures.

- Changing the "Wide LCT Fan Duty Adjustment" (SP1920-xxx)
- Turning on the LCT Heater
- Changing the upper limit of the paper stack in the LCT tray

Changing the "Wide LCT Fan Duty Adjustment" (SP1920-xxx)

The LCTs (main and option) have two fans for air-assisted paper feed. Increasing the duty of the fans can reduce the attraction between each sheet of paper and may reduce double feed problems.

Note

- The setting values for the front and rear air assist fans must be the same value.
- The default setting (70%) of SP1920-xxx is recommended for thin paper (60 to 71 g/cm^3) and small size paper (B5 or less).

1. Enter the SP mode, and then select SP1920-xxx.
    - -001: Front air assist fan at A3 LCT Tray 3

- -002: Rear air assist fan at A3 LCT Tray 4
- -003: Front air assist fan at A3 LCT Tray 5
- -004: Rear air assist fan at A3 LCT Tray 6

2. Increase the setting value of SP1920-xxx by 10% (default: 70%).
   - Print or copy a sample page, and then check if double feed occurs or not.

Important

- **Retry the "Wide LCT Fan Duty Adjustment" if the following problems occur.**
- **A paper jam occurs at the paper feed sensor in the LCT.**
- **The double feed cannot be solved due to too much duty of the air assist fan.**

Turning on the LCT Heater

The LCT heater can remove excessive humidity, and then reduce the attraction between each sheet of paper.

- For details about how to turn on the LCT heater, see Connecting the Upper and Lower Tray Heaters in the section "Mainframe".

Changing the upper limit of the paper stack in the LCT tray

Changing the upper limit of the paper stack in the LCT tray can improve paper separation for the paper stack in the LCT tray.

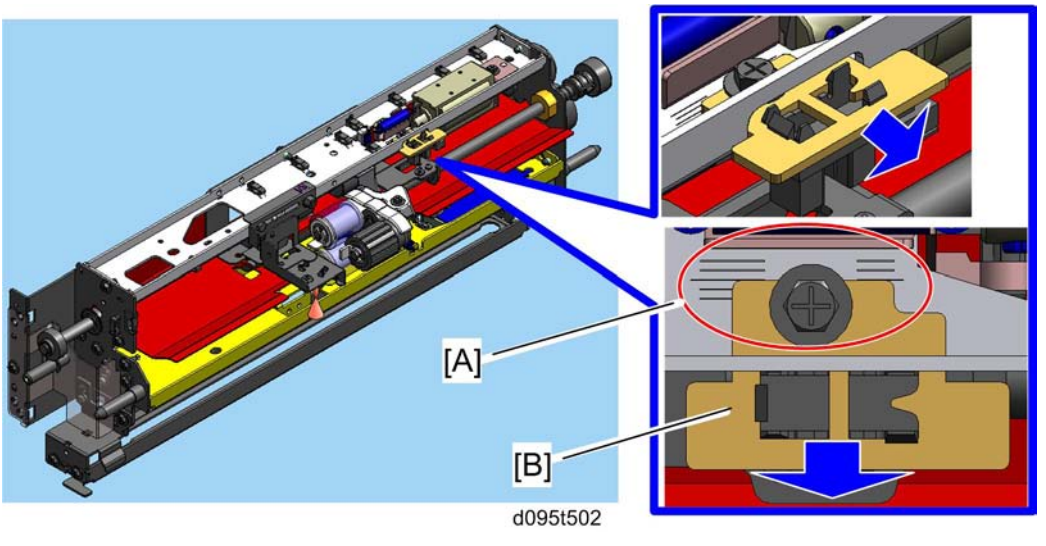

1. Pull the paper feed unit of the LCT unit (See "Paper Feed, Pick-up and Separation Rollers").
2. Note the default position of the paper lift sensor bracket by referring to the scale [A] on the frame.

- The scale on the frame is divided into units of 1 mm.

3. Loosen the screw on the paper lift sensor bracket [B].
4. Move the bracket 0.5 mm in the arrow direction as shown above.
5. Tighten the screw on the paper lift sensor bracket [B].

Note

- To return the upper limit position to the default position, move the paper lift sensor bracket 0.5 mm to the opposite side.
- Return the upper limit position to the default if a paper jam occurs at the paper feed sensor in the LCT.

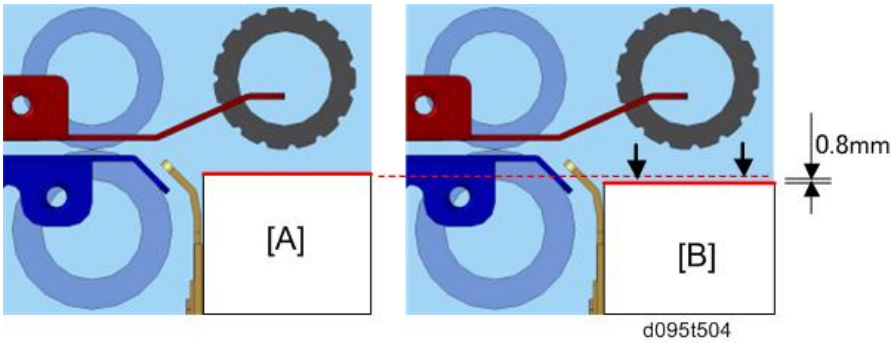

6. This adjustment lowers the upper limit position by 0.8 mm.
   - [A]: Paper stack before adjustment
   - [B]: Paper stack after adjustment

No Paper Feed from LCT (Main and Option)

Changing the upper limit of the paper stack in the LCT tray can prevent paper non-feed from the paper stack in the LCT tray.

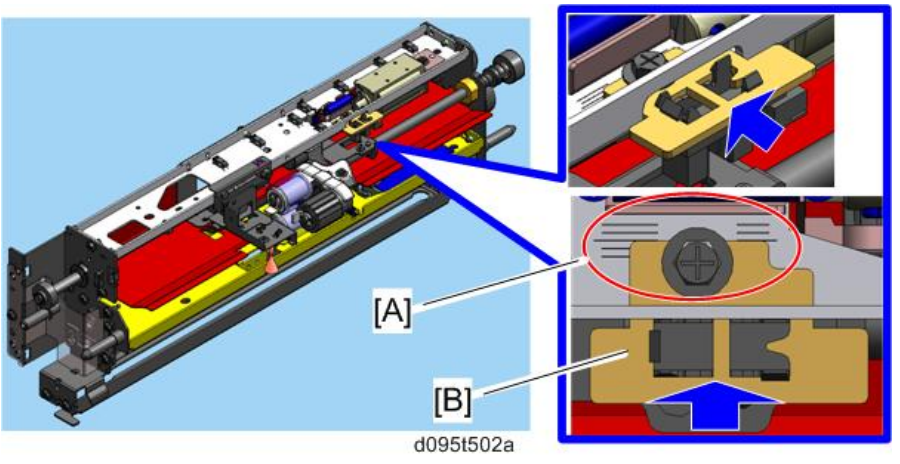

1. Pull the paper feed unit of the LCT unit (See "Paper Feed, Pick-up and Separation Rollers").
2. Note the default position of the paper lift sensor bracket by referring to the scale [A] on the frame.
   - The scale on the frame is divided into units of 1 mm.
3. Loosen the screw on the paper lift sensor bracket [B].
4. Move the bracket 0.5 mm in the arrow direction as shown above.
5. Tighten the screw on the paper lift sensor bracket [B].

Note

- To return the upper limit position to the default position, move the paper lift sensor bracket 0.5 mm to the opposite side.
- Return the upper limit position to the default if a paper jam occurs at the paper feed sensor in the LCT.

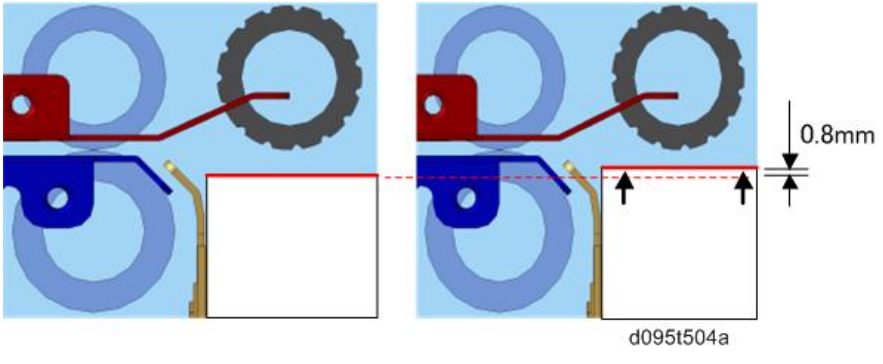

6. This adjustment lifts the upper limit position by 0.8 mm.
   - [A]: Paper stack before adjustment
   - [B]: Paper stack after adjustment

Operation Problems

Clearing SC 471, 475 or 476

SC 471, 475 or 476 occurs when the ITB is out of the proper position. A physical adjustment is required to clear the SC 471, 475 or 476 problem after all countermeasures for SC 471, 475 or 476 have failed.

1. Check the belt centering cam position with SP2-920-001 after the machine's warm-up has completed.
   - If the checked cam position (number of steps) is within ± 20 steps, this adjustment is not necessary. Try to find another countermeasure.
2. Open the left and right front door.
3. Remove the inner cover for the ITB unit drawer (x 4).

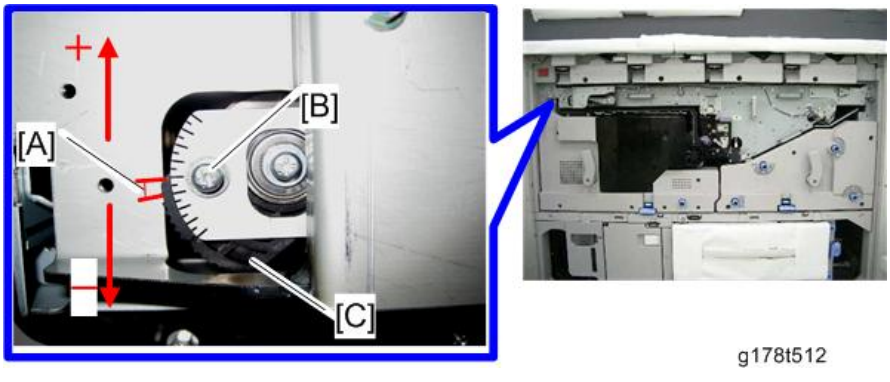

4. Calculate how many notches on the scale to adjust, and check the adjustment direction (+ or –) with the following formula.
   - Checked cam position (steps) / 18 = necessary adjustment notches

   [A] indicates one notch.

   For example, if the checked cam position is –27, the necessary adjustment is –1.5 notches (–27 / 18 = –1.5).
5. Loosen the screw [B].
6. Move the adjustor [C] in the + or – direction by the necessary number of notches.
7. Tighten the screw [B] after this adjustment is completed.
8. Reassemble the machine.

ITB Condition Check

ITB condition check is required after installing a new ITB. Three ID/MUSIC sensors (front, center and rear) check if there are scratches and dents on the ITB. After checking, detection time is stored in each SP (SP2110-001/ -002/ -003).

Do the following procedure to check the ITB condition.

1. Turn on the mainframe.
2. Enter the "SP2110-004", and then press the "Execute" button on the LCD.
3. Check the following SPs.
    - SP2110-001 (Front)
    - SP2110-002 (Center)
    - SP2110-003 (Rear)
4. Some scratches or dents exist on the ITB if "1" is displayed in the one of the bits (e.g. "00000001").
5. Reinstall the ITB in the opposite direction.
6. Do steps 2 and 3.
7. Check and clean the ID/Music sensors with a cloth and alcohol if "1" is still displayed in one of the bits after reinstalling the ITB in the opposite direction.
8. Do steps 2 and 3 again.

Stapling Error for Finisher SR5000 (B830)

If a stapling error occurs due to static electricity on the paper when the SR5000 finisher is used, install an additional discharge brush in the finisher.

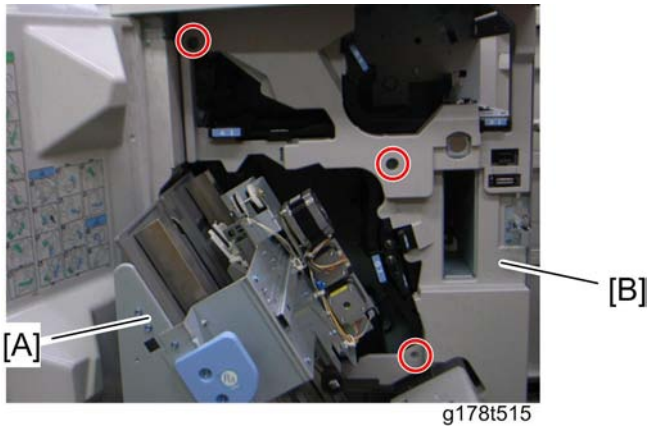

1. Open the front door of the finisher, and then pull out the stapler tray unit [A].
2. Remove the inner cover [B] (x 3, hooks).

3. Push the stapler tray unit into the finisher.

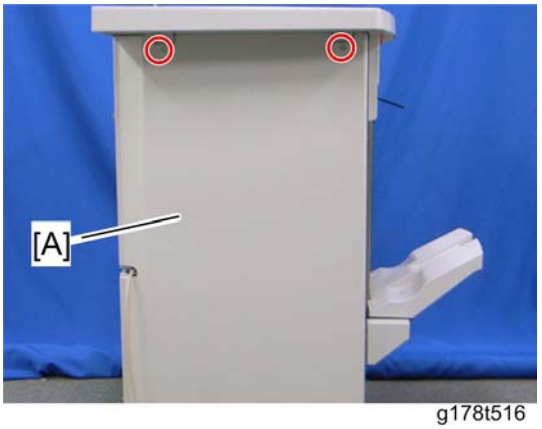

g178t516

4. Remove the rear cover [A] (x 2).

g178t518

g178t517

5. Remove the front tension spring [A] of the paper exit guide plate [B].

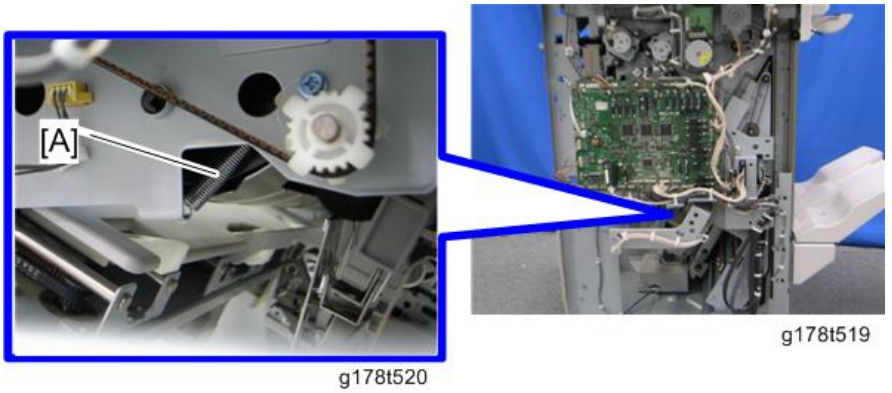

g178t520

g178t519

6. Remove the rear tension spring [A] of the paper exit guide plate.

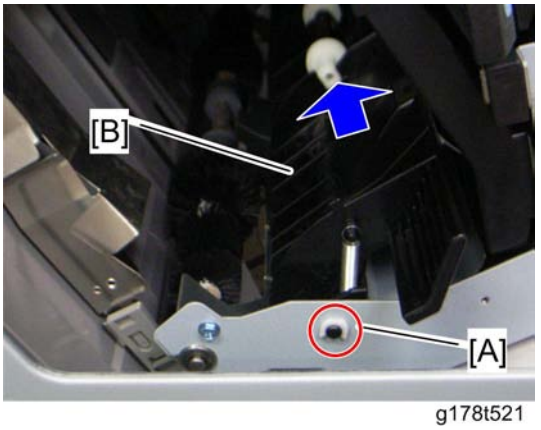

g178t521

7. Remove the clip [A].
8. Move the paper exit guide plate [B] to the rear, and then remove it.

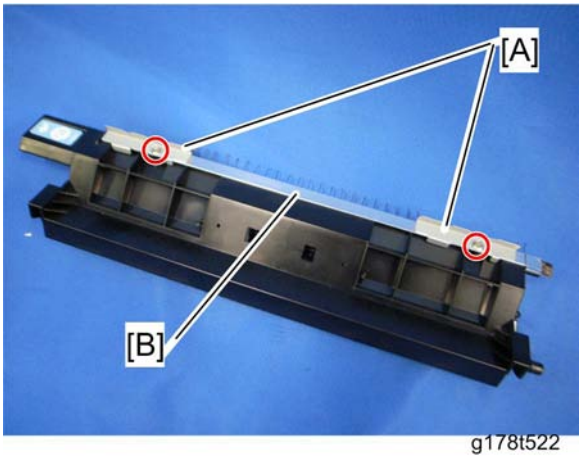

g178t522

9. Remove the brackets [A] (x 1 each) from the paper exit guide plate [B], and then remove the discharge plate.

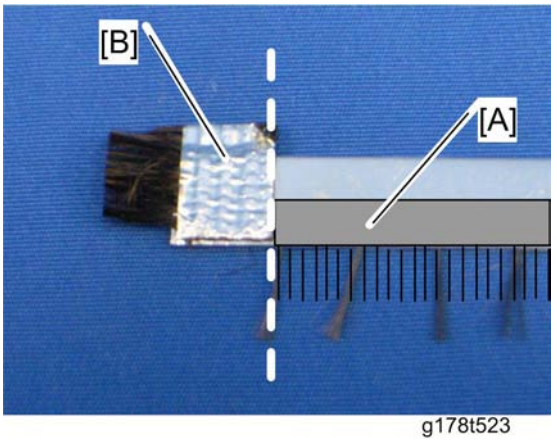

g178t523

10. Remove the double sided tape from the discharge brush, and attach the discharge brush [A] to the discharge plate [B] as shown above.
11. Reassemble the finisher.

Rear Controller Box Connection Error

Detaching the rear controller box from the main engine may be required at machine installation depending on the customer's environment.

If incorrect connections between the rear controller box and main engine have been done when reattaching the rear controller box, some SC or errors may occur.

Problem Cause

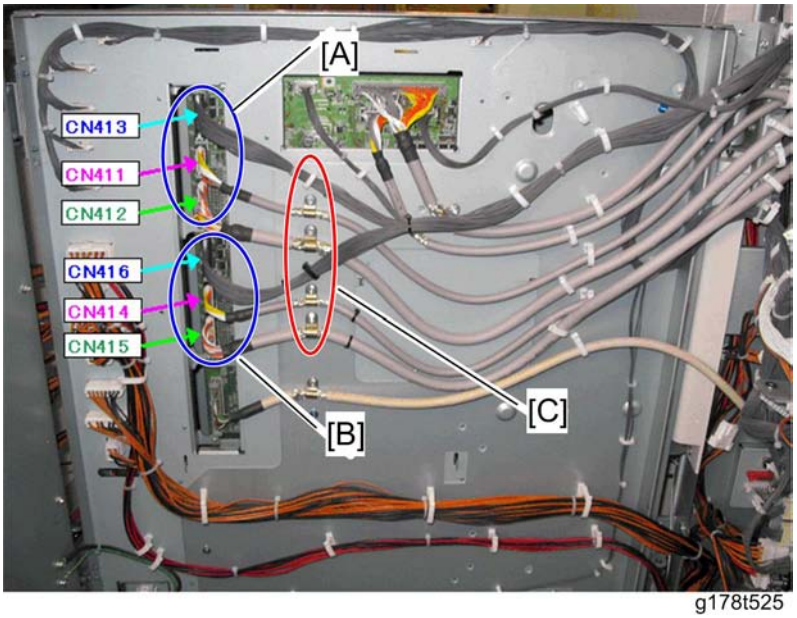

g178t525

The connector pin structure of the upper cable group [A] and lower cable group [B] is the same. As a result, incorrect connections can be done when reattaching the rear controller box.

- CN413 = CN416/ CN411 = CN414/ CN412 = CN415

1. Do not release or remove the clamps [C] when detaching the rear controller box. It is possible to detach and attach the rear controller box without releasing or removing the clamps [C].

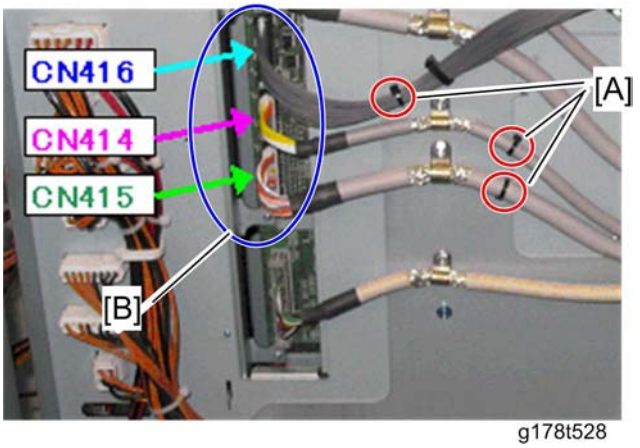

g178t528

2. Check if the cables with black bands [A] must be connected to the connectors [B] (CN416/ CN414/ CN415).

Possible Cause List

Possible Cause	Symptom
Wrong connections between CN413 and CN416	SC254 occurs when the machine is turned on.
Wrong connections between CN412 and CN415	
Wrong connections between CN411 and CN414/ and between CN412 and CN415	SC254 occurs when power is switched ON.
Wrong connections between CN411 and CN414/ and between CN413and CN416	
Wrong connection between CN411 and CN414	Operation is normal after the machine is turned on and printing operation is normal as well. The following SCs are logged (not displayed on the LCD) in the machine when process control is executed. • SC424, S425, SC426 and SC427

Wrong connections between CN412 and CN415/ and between CN413and CN416	Operation is normal after the machine is turned on, but the output image is abnormal. SC410 occurs when process control is executed.
All connections are wrong. • CN411 and CN414 • CN412 and CN415 • CN413 and CN416	
CN410 disconnected	SC161-01 is displayed on the LCD. Initial operation of the machine is normal.
CN418 disconnected	SC202 is displayed on the LCD.
CN419 disconnected	Initialization of the machine cannot be done. "Please wait" appears on the LCD, but the machine cannot go to the next operation.
CN420 disconnected	
CN423 disconnected	All indicators on the operation panel are flashing.
Bad connection between "GW Controller" and "Fiery Controller"	SC991 is displayed on the LCD.

Abnormal Image when CN412 or CN415 is Disconnected

Incomplete connection of CN412

Here is a sample image if an abnormal image occurs on an output due to the incomplete connection of CN412.

- [A]: Abnormal image
- [B]: Normal image

This abnormal image may be output when a full red color job is executed.

Incomplete connection of CN415

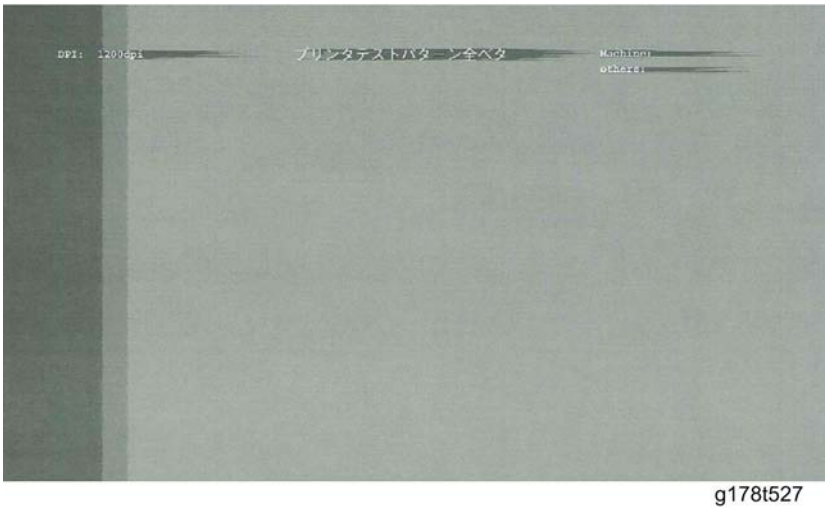

g178t527

Here is a sample image if an abnormal image occurs on an output due to the incomplete connection of CN415.

This abnormal image may be output when a full black color job is executed.

Remaining Toner Detection Error

Toner supply error SC (SC332, 333, 334 or 335) or toner empty message is displayed on the LCD even though none of the toner cartridges gets the toner near-end or toner end status. This may be caused by clogged toner in the toner supply tube. Follow the cleaning procedure for the toner supply tube at 400 K interval.

Cleaning Procedure for the Toner Supply Tube

1. Prepare a vacuum cleaner before starting this procedure.
2. Remove the all toner cartridges or pull them out on the half way from the toner hopper unit.
3. Open the rear controller box.

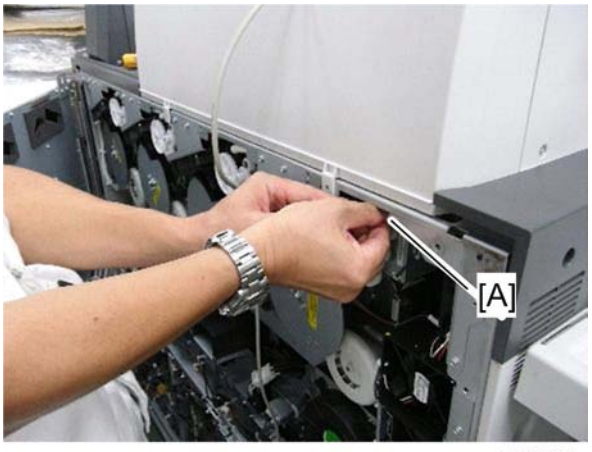

g178t531

4. Remove the toner supply tube [A].

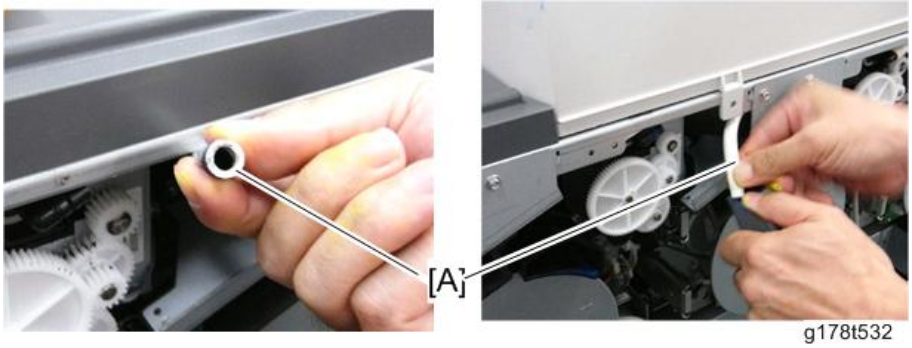

g178t532

5. Clean the toner supply tube [A] with a vacuum cleaner.
6. Reattach the toner supply tube.
7. Repeat steps from 4 to 6 for all colors.
8. Reattach the rear controller box.
9. Reinstall the all toner cartridge in the toner hopper unit.

Operation Error after Controller Selection

The operation error may occur for each model (printer and copier) if the setting of the controller selection (SP5-139-001) is set to "0". The error symptom for each model is different. Refer to the following recovery procedure for each model.

Recovery of "Please wait" for Printer Model

The printer never gets out of the "Please wait" condition.

1. Shut down the controller.
2. Turn off the machine.
3. Insert the "TEST PRINT TOOL V2" SD-card into SD slot 2.
4. Turn on the machine, and wait approximately 4 minutes while "Please Wait" still appears on the operation panel.
5. Wait for the "TEST PRINT TOOL V2" menu to appear.
6. Enter the SP mode, and then select SP5-193-001.
7. Select "6" for the Fiery controller or "5" for the Creo controller with SP5-193-001.
8. Turn the machine off and on.
9. Turn on the controller, and then check if the machine operates correctly.

Recovery of No Communication with Controller for Copier Model

The copier never communicates with the controller.

1. Enter the SP mode.
2. Select SP5-193-001.
3. Select "6" for the Fiery controller or "5" for the Creo controller with SP5-193-001.
4. Turn off the controller.
5. Turn off the machine and on.
6. Turn on the controller, and then check if the machine operates correctly.

Electrical Component Defects

Brown Fuse Conditions

PSU Type-EA1

Fuse	Rating	Symptom when turning on the main switch
	200V - 240V	
FU001	3.15 A	The operation SW is lit, but the machine has no response
FU002	6.3 A	The machine stops during warming-up and SC311 is issued.
FU3	4 A	Fiery controller LED turns on, but the machine has no response.

PSU Type-EA2

Fuse	Rating	Symptom when turning on the main switch
	200V - 240V	
FU001	3.15 A	The operation SW is lit, but the machine has no response
FU002	6.3 A	The machine stops during warming-up and SC328 is issued.
FU3	4 A	The machine stops during warming-up and "Door Open" is displayed. Even when the doors are closed, "Door Open" still remains.

PSU Type-EB

Fuse	Rating	Symptom when turning on the main switch
	200V - 240V	
FU101	6.3 A	The machine stops during warming-up and SC327 is issued.

PSU Type-G

Fuse	Rating	Symptom when turning on the main switch
	200V - 240V	
FU2	4 A	The machine stops during warming-up and "Door Open" is displayed. Even when the doors are closed, "Door Open" still remains.

PSU Type-Controller

Fuse	Rating	Symptom when turning on the main switch
	200V - 240V	
FU1	3.15 A	No response.

Jam Detection

Paper Jam Display

SP7-507 shows the paper jam history.

```
CODE :011
SIZE    :05h
TOTAL:000034
DATE  :Fri Feb 20 11:44:50 2009
```

d016t503

- CODE: Indicates the jam code.
- SIZE: Indicates the paper Size Code.
- TOTAL: Indicates the total counter (SP7-502-001).
- DATE: indicates the date when the jam occurred.

Paper Size Code

Size Code	Paper Size	Size Code	Paper Size
05	A4 LEF	141	B4 SEF
06	A5 LEF	142	B5 SEF
14	B5 LEF	160	DLT SEF
38	LT LEF	164	LG SEF
44	HLT LEF	166	LT SEF
132	A3 SEF	172	HLT SEF
133	A4 SEF	255	Others
134	A5 SEF	-	-

Jam Codes and Display Codes

SP7-504 and SP7-509 show how many jams occurred at each location. Jam codes from 001 to 255 correspond with the suffix number of SP7-504 (e.g. Jam code 001 corresponds with SP7-504-001) and Jam codes from 256 to 396 correspond with the suffix number of SP7-509 by the following formula.

- Suffix number of SP7-509 = Jam code (256 to 396) - 255 (e.g. Jam code 256 corresponds with SP7-509-001)

The following jam code and display code table is used for the printer models (M077) and copier models (D095).

Note

- "P only" denotes that its jam code is used only for the printer models (M077).

Mainframe

Jam Code	Display	Description	LCD Display
-001	At power on	Initial paper jam	-
-003	Paper feed sensor 1: Late	Paper is not fed from tray 1.	A3
-004	Paper feed sensor 2: Late	Paper is not fed from tray 2.	A2
-006 (P only)	Paper feed sensor 3 (A4 LCT): Late	Paper is not fed from the upper tray of the A4 LCT.	U2
-007 (P only)	Paper feed sensor 4 (A4 LCT): Late	Paper is not fed from the middle tray of the A4 LCT.	U4
-008 (P only)	Paper feed sensor 5 (A4 LCT): Late	Paper is not fed from the lower tray of the A4 LCT.	U5
-009	Paper feed sensor (By-pass): Late	Paper is not fed from the by-pass tray.	V
-010	Paper feed sensor upper (A3 LCT1): Late	Paper is not fed from the upper tray of the A3 LCT or LCT-MF.	U2
-011	Paper feed sensor lower (A3 LCT1): Late	Paper is not fed from the lower tray of the A3 LCT or LCT-MF.	U4

Jam Code	Display	Description	LCD Display
-012	Paper feed sensor upper (A3 LCT2): Late	Paper is not fed from the upper tray of the A3 LCT.	U2
-013	Paper feed sensor lower (A3 LCT2): Late	Paper is not fed from the lower tray of the A3 LCT.	U4
-014	Vertical Transport Sensor 1: Late	Vertical transport sensor 1 does not detect paper from tray 1.	A
-015	Vertical Transport Sensor 2: Late	Vertical transport sensor 1 does not detect paper from tray 2.	A
-017 (P only)	Grip Sensor 1: Late	Grip Sensor 1 does not detect paper.	B
-018 (P only)	Grip Sensor 2: Late	Grip Sensor 2 does not detect paper.	B
-019 (P only)	Grip Sensor 3: Late	Grip Sensor 3 does not detect paper.	B
-020	Relay sensor (By-pass): Late	-	V
-021	LCT Grip Sensor 1 (A3 LCT1): Late	LCT grip sensor 1 (A3 LCT1) does not detect paper.	U, U2
-022	LCT Grip Sensor 2 (A3 LCT1): Late	LCT grip sensor 2 (A3 LCT1) does not detect paper.	U, U4
-023	LCT Grip Sensor 1 (A3 LCT2): Late	LCT grip sensor 1 (A3 LCT2) does not detect paper.	U, U2
-024	LCT Grip Sensor 2 (A3 LCT2): Late	LCT grip sensor 2 (A3 LCT2) does not detect paper.	U, U4
-025 (P only)	Relay sensor (A4 LCT): Late	-	U
-026	LCT vertical transport sensor 3 (A3 LCT1): Late	LCT vertical transport sensor 3 (A3 LCT1) does not detect paper.	U
-027	LCT vertical transport sensor 1 (A3 LCT1): Late	LCT vertical transport sensor 1 (A3 LCT1) does not detect paper.	U

Jam Code	Display	Description	LCD Display
-028	LCT vertical transport sensor 2 (A3 LCT1): Late	LCT vertical transport sensor 2 (A3 LCT1) does not detect paper.	U
-029	LCT vertical transport sensor 1 (A3 LCT2): Late	LCT vertical transport sensor 1 (A3 LCT2) does not detect paper.	U
-030	LCT vertical transport sensor 2 (A3 LCT2): Late	LCT vertical transport sensor 2 (A3 LCT2) does not detect paper.	U
-031 **(P only)**	LCT exit sensor (A4 LCT): Late	LCT exit sensor (A4 LCT) does not detect paper.	U
-033	Registration entrance sensor: Late	Registration entrance sensor does not detect paper.	B4
-034	LCT entrance sensor: Late	LCT entrance sensor does not detect paper.	B5
-035	Registration timing sensor: Late	Registration timing sensor does not detect paper.	B6
-036	PTR timing sensor: Late	PTR timing sensor does not detect paper.	B6
-037	PTB jam sensor: Late	PTB jam sensor does not detect paper.	C
-038	Fusing exit sensor: Late	Fusing exit sensor does not detect paper.	D1
-039	Exit junction timing sensor: Late	Exit junction timing sensor does not detect paper.	D2
-040	Paper exit sensor: Late	Paper exit sensor does not detect paper.	D2
-041	Switchback sensor: Late	Switchback sensor does not detect paper.	D3
-042	Duplex transport sensor 1: Late	Duplex transport sensor 1 does not detect paper.	Z1
-043	Duplex transport sensor 2: Late	Duplex transport sensor 2 does not detect paper.	Z1
-044	Duplex transport sensor 3: Late	Duplex transport sensor 3 does not detect paper.	Z4

Jam Code	Display	Description	LCD Display
-045	Duplex transport sensor 4: Late	Duplex entrance sensor 4 does not detect paper.	Z4
-053	Paper feed sensor 1: Stay on	Paper feed sensor 1 does not turn off.	A3
-054	Paper feed sensor 2: Stay on	Paper feed sensor 2 does not turn off.	A2
-056 (P only)	Paper feed sensor upper (A4 LCT): Stay on	Paper feed sensor upper (A4 LCT) does not turn off.	U2
-057 (P only)	Paper feed sensor middle (A4 LCT): Stay on	Paper feed sensor middle (A4 LCT) does not turn off.	U4
-058 (P only)	Paper feed sensor lower (A4 LCT): Stay on	Paper feed sensor lower (A4 LCT) does not turn off.	U5
-059	Paper feed sensor (By-pass): Stay on	Paper feed sensor (By-pass) does not turn off.	V
-060	Paper feed sensor upper (A3 LCT1): Stay on	Paper feed sensor upper (A3 LCT1) does not turn off.	U2
-061	Paper feed sensor lower (A3 LCT1): Stay on	Paper feed sensor lower (A3 LCT1) does not turn off.	U4
-062	Paper feed sensor upper (A3 LCT2): Stay on	Paper feed sensor upper (A3 LCT2) does not turn off.	U2
-063	Paper feed sensor lower (A3 LCT2): Stay on	Paper feed sensor lower (A3 LCT2) does not turn off.	U4
-064	Vertical Transport Sensor 1: Stay on	Vertical transport sensor 1 does not turn off.	A
-065	Vertical Transport Sensor 2: Stay on	Vertical transport sensor 2 does not turn off.	A
-067 (P only)	4th transport sensor (A4 LCT): Stay on	4th transport sensor (A4 LCT) does not turn off.	U2
-068 (P only)	5th transport sensor (A4 LCT): Stay on	5th transport sensor (A4 LCT) does not turn off.	U4

Jam Code	Display	Description	LCD Display
-069 (P only)	6th transport sensor (A4 LCT): Stay on	6th transport sensor (A4 LCT) does not turn off.	U5
-070	Relay sensor (By-pass): Stay on	Relay sensor (By-pass) does not turn off.	U
-071	LCT Grip Sensor 1 (A3 LCT1): Stay on	LCT Grip Sensor 1 (A3 LCT1) does not turn off.	U, U2
-072	LCT Grip Sensor 2 (A3 LCT1): Stay on	LCT Grip Sensor 2 (A3 LCT1) does not turn off.	U, U2
-073	LCT Grip Sensor 1 (A3 LCT2): Stay on	LCT Grip Sensor 1 (A3 LCT2) does not turn off.	U, U2
-074	LCT Grip Sensor 2 (A3 LCT2): Stay on	LCT Grip Sensor 2 (A3 LCT2) does not turn off.	U, U2
-075 (P only)	Relay sensor (A4 LCT): Stay on	Relay sensor (A4 LCT) does not turn off.	U
-076	LCT vertical transport sensor 3 (A3 LCT1): Stay on	LCT vertical transport sensor 3 (A3 LCT1) does not turn off.	U
-077	LCT vertical transport sensor 1 (A3 LCT1): Stay on	LCT vertical transport sensor 1 (A3 LCT1) does not turn off.	U
-078	LCT vertical transport sensor 2 (A3 LCT1): Stay on	LCT vertical transport sensor 2 (A3 LCT1) does not turn off.	U
-079	LCT vertical transport sensor 1 (A3 LCT2): Stay on	LCT vertical transport sensor 1 (A3 LCT2) does not turn off.	U
-080	LCT vertical transport sensor 2 (A3 LCT2): Stay on	LCT vertical transport sensor 2 (A3 LCT2) does not turn off.	U
-081 (P only)	LCT exit sensor (A4 LCT): Stay on	LCT exit sensor (A4 LCT) does not turn off.	U
-083	Registration entrance sensor: Stay on	Registration entrance sensor does not turn off.	B4
-084	LCT entrance sensor: Stay on	LCT entrance sensor does not turn off.	B5

Jam Code	Display	Description	LCD Display
-085	Registration timing sensor: Stay on	Registration timing sensor does not turn off.	B6
-086	PTR timing sensor: Stay on	PTR timing sensor does not turn off.	B6
-087	PTB jam sensor: Stay on	PTR jam sensor does not turn off.	C
-088	Fusing exit sensor: Stay on	Fusing exit sensor does not turn off.	D1
-089	Exit junction timing sensor: Stay on	Exit junction timing sensor does not turn off.	D2
-090	Paper exit sensor: Stay on	Paper exit sensor does not turn off.	D2
-091	Switchback sensor: Stay on	Switchback sensor does not turn off.	D3
-092	Duplex transport sensor 1: Stay on	Duplex transport sensor 1 does not turn off.	Z1
-093	Duplex transport sensor 2: Stay on	Duplex transport sensor 2 does not turn off.	Z1
-094	Duplex transport sensor 3: Stay on	Duplex transport sensor 3 does not turn off.	Z4
-095	Duplex transport sensor 4: Stay on	Duplex transport sensor 4 does not turn off.	Z4
-097	Switchback Sensor	Switchback lower sensor does not turn off.	E
-098	CIS: Skew Detection	CIS does not turn off.	B6
-099	Double-feed Sensor	Double-feed Sensor does not turn off.	B6

Finisher SR5000 (B830)

Jam Code	Display	Description	LCD Display
-101	Entrance Sensor - Fin.: Paper late error	Entrance sensor does not detect paper.	R1 to R3

Jam Code	Display	Description	LCD Display
-102	Entrance Sensor - Fin. (Stay On): Paper lag error	Entrance sensor does not turn off.	R1 to R3
-103	Upper Tray Exit Sensor - Fin: Paper late error	Upper tray exit sensor does not detect paper.	R1 to R3
-104	Upper Tray Exit Sensor - Fin (Stay On): Paper lag error	Upper tray exit sensor does not turn off.	R1 to R3
-105	Shift Tray Exit Sensor - Fin: Paper late error	Shift tray exit sensor does not detect paper.	R1 to R3
-106	Shift Tray Exit Sensor - Fin (Stay On): Paper lag error	Shift tray exit sensor does not turn off.	R1 to R3
-107	Staple Tray Exit Sensor - Fin: Paper late error	Staple tray exit sensor does not detect paper.	R4 to R8
-108	Staple Tray Exit Sensor - Fin (Stay On): Paper lag error	Staple tray exit sensor does not turn off.	R4 to R8
-109	Staple Tray Paper Sensor - Fin: Paper late error	Staple tray paper sensor does not detect paper.	R4 to R8
-110	Staple Tray Paper Sensor - Fin (Stay On): Paper lag error	Staple tray paper sensor does not turn off.	R4 to R8
-111	Stack Feed-Out Belt HP Sensor	Stack feed-out belt HP sensor does not turn off.	R4 to R8
-112	Transport Motors	The machine detects a lock signal from the transport motors.	R1 to R3
-113	Shift Tray Lift Motor	The machine detects a lock signal from the shift tray lift motor.	R1 to R3
-114	Jogger Motor	The machine detects a lock signal from the jogger motor.	R4 to R8
-115	Shift Motor	The machine detects a lock signal from the shift motor.	R1 to R3
-116	Staple Motor	The machine detects a lock signal from the staple motor.	R4 to R8

Jam Code	Display	Description	LCD Display
-117	Stack Feed-Out Belt Motor	The machine detects a lock signal from the stack feed-out belt motor.	R4 to R8
-118	Punch Motor	The machine detects a lock signal from the punch motor.	R1 to R3
-119	Z-Fold Jam - Fin	The machine detects a lock signal from the Z-hold jam motor.	R4 to R8
-120	Pre-Stack Transport Motor	The machine detects a lock signal from the pre-stack transport jam motor.	R4 to R8
-121	Abnormal Signal - Fin	The machine detects the job data error.	R1 to R3
-122	Upper Stopper Motor Lock	The machine detects the jam signal from the Plockmatic unit.	Ploc

Cover Interposer Tray CI5010 (B835)

Jam Code	Display	Description	LCD Display
-130	1st Paper Feed Sensor - Late	1st paper feed sensor does not detect paper.	Q1
-131	1st Paper Feed Sensor - Lag	1st paper feed sensor does not turn off.	Q1
-132	2nd Paper Feed Sensor - Late	2nd paper feed sensor does not detect paper.	Q2
-133	2nd Paper Feed Sensor - Lag	2nd paper feed sensor does not turn off.	Q2
-134	1st Transport Sensor - Late	1st transport sensor does not detect paper.	Q3 to Q4
-135	1st Transport Sensor - Lag	1st transport sensor does not turn off.	Q3 to Q4
-136	2nd Transport Sensor - Late	2nd transport sensor does not detect paper.	Q3 to Q4
-137	2nd Transport Sensor - Lag	2nd transport sensor does not turn off.	Q3 to Q4

Jam Code	Display	Description	LCD Display
-138	1st Vertical Transport Sensor - Late	1st vertical transport sensor does not detect paper.	Q3 to Q4
-139	1st Vertical Transport Sensor - Lag	1st vertical transport sensor does not turn off.	Q3 to Q4
-140	2nd Vertical Transport Sensor - Late	2nd vertical transport sensor does not detect paper.	Q3 to Q4
-141	2nd Vertical Transport Sensor - Lag	2nd vertical transport sensor does not turn off.	Q3 to Q4
-142	Vertical Exit Sensor - Late	Vertical exit sensor does not detect paper.	Q3 to Q4
-143	Vertical Exit Sensor - Lag	Vertical exit sensor does not turn off.	Q3 to Q4
-144	Entrance Sensor - Late	Entrance sensor does not detect paper.	Q3 to Q4
-145	Entrance Sensor - Lag	Entrance sensor does not turn off.	Q3 to Q4
-146	Exit Sensor - Late	Exit sensor does not detect paper.	Q3 to Q4
-147	Exit Sensor - Lag	Exit sensor does not turn off.	Q3 to Q4
-148	1st Lift Motor	The machine detects a lock signal from the 1st lift motor.	Q1
-149	2nd Lift Motor	The machine detects a lock signal from the 2nd lift motor	Q2
-150	1st Pick-Up Motor	The machine detects a lock signal from the 1st pick-up motor.	Q1
-151	2nd Pick-Up Motor	The machine detects a lock signal from the 2nd pick-up motor	Q2

Booklet Finisher SR5020 (D434)

Jam Code	Display	Description	LCD Display
-160	Entrance: Late Error (D434)	Entrance sensor does not detect paper.	Rb1 to Rb5
-161	Entrance: Lag Error (D434)	Entrance sensor does not turn off.	Rb1 to Rb5
-162	Proof Tray Exit: Late Error (D434)	Proof tray exit sensor does not detect paper.	Rb1 to Rb5
-163	Proof Tray Exit: Lag Error (D434)	Proof tray exit sensor does not turn off.	Rb1 to Rb5
-164	Shift Tray Exit: Late Error (D434)	Shift tray exit sensor does not detect paper.	Rb1 to Rb5
-165	Shift Tray Exit: Lag Error (D434)	Shift tray exit sensor does not turn off.	Rb1 to Rb5
-166	Staple Tray Exit: Late Error (D434)	Stapling tray paper sensor does not detect paper.	Rb6 to Rb8
-167	Staple Tray Exit: Lag Error (D434)	Stapling tray paper sensor does not turn off.	Rb10 to Rb17
-168	Pre-Stack Tray: Late Error (D434)	Pre-stack paper sensor does not detect paper.	Rb6 to Rb9
-169	Pre-Stack Tray: Lag Error (D434)	Pre-stack paper sensor does not turn off.	Rb6 to Rb9
-170	Output (D434)	Booklet unit exit sensor detects a paper jam.	Rb10 to Rb17
-171	Booklet Stapler: Late (D434)	Fold unit entrance sensor does not detect paper.	Rb10 to Rb17
-172	Booklet Stapler: Lag (D434)	Fold unit entrance sensor does not turn off.	Rb10 to Rb17
-173	Booklet Stapler Exit: Late (D434)	Fold unit exit sensor does not detect paper.	Rb10 to Rb17

Jam Code	Display	Description	LCD Display
-174	Booklet Stapler Exit: Lag (D434)	Fold unit exit sensor does not turn off.	Rb10 to Rb17
-175	Paper Path (D434)	The machine detects an error signal from the stapler JG HP sensor or proof tray HP JG sensor or a lock signal from the transport motors.	Rb1 to Rb5
-176	Shift Tray Lift Drive Train (D434)	The machine detects an error signal from the paper height sensors.	Rb1 to Rb5
-177	Jogger Fence Drive Train (D434)	The machine detects an error signal from the jogger fence HP sensors or top fence HP sensor	Rb10 to Rb17
-178	Shift Drive Train (D434)	The machine detects an error signal from the exit guide HP sensor, shift tray HP sensors, shift tray jogger HP sensor, shift tray jogger retract HP sensor or drag roller HP sensor.	Rb1 to Rb5
-179	Stapler Drive Train (D434)	The machine detects an error signal from the corner stapler HP sensor, stapler rotation HP sensors, bottom fence HP sensor or stapler HP sensor.	Rb10 to Rb17
-180	Stack Output Drive Train (D434)	The machine detects an error signal from the stack feed-out belt HP sensor	Rb10 to Rb17
-181	Punch Drive Train (D434)	The machine detects an error signal from the punch blade HP sensor, punch unit HP sensor or punch SW.	Rb1 to Rb5
-182	Jogger System (D434)	The machine detects an error signal from the stack plate HP sensors or positioning roller HP sensor	Rb10 to Rb17
-183	Pre-Stacker Drive Train (D434)	The machine detects an error signal from the pre-stack roller HP sensor.	Rb6 to Rb9
-184	Booklet Path (D434)	The machine detects an error signal from the stack transport unit HP sensor or stack JG HP sensor.	Rb10 to Rb17

Jam Code	Display	Description	LCD Display
-185	Booklet Stapling System (D434)	The machine detects an error signal from the booklet top fence HP sensor, booklet stapler jogger HP sensors, booklet stapler bottom fence HP sensor or booklet stapler unit.	Rb10 to Rb17
-186	Folding System (D434)	The machine detects an error signal from the fold plate cam HP sensor, fold plate HP sensor or booklet stapler clamp roller HP sensor.	Rb10 to Rb17
-187	Main Machine Setting Incorrect (D434)	The machine detects an error signal of the communication with an upstream unit.	Rb1 to Rb5

Z-folding Unit ZF4000 (B660)

Jam Code	Display	Description	LCD Display
-200	Feed Sensor - Late	Feed sensor does not detect paper.	N1
-201	Feed Sensor - Lag	Feed sensor does not turn off.	N1
-202	Fold Timing Sensor - Late	Fold timing sensor does not detect paper.	N2, N3
-203	Fold Timing Sensor - Lag	Fold timing sensor does not turn off.	N2, N3
-204	Leading Edge Sensor - Late	Leading edge sensor does not detect paper.	N2, N3
-205	Leading Edge Sensor - Lag	Leading edge sensor does not turn off.	N2, N3
-206	Upper Stopper HP Sensor - Late	Upper stopper HP sensor does not detect paper.	N2, N3
-207	Upper Stopper HP Sensor - Lag	Upper stopper HP sensor does not turn off.	N2, N3
-208	Upper Exit Sensor 1 - Late	Upper exit sensor 1 does not detect paper.	N1

Jam Code	Display	Description	LCD Display
-209	Upper Exit Sensor 1 - Lag	Upper exit sensor 1 does not turn off.	N1
-212	Lower Exit Sensor 2 - Late	Lower exit sensor 2 does not detect paper.	N2, N3
-213	Lower Exit Sensor 2 - Lag	Lower exit sensor 2 does not turn off.	N2, N3
-214	Feed Motor	The machine detects a lock signal from the feed motor.	N1
-215	Lower Stopper Motor	The machine detects a lock signal from the lower stopper motor.	N2, N3
-216	Upper Stopper Motor	The machine detects a lock signal from the upper stopper motor.	N2, N3

Trimmer Unit TR5020 (D455)

Jam Code	Display	Description	LCD Display
-220	Entrance Sensor: Late Error (D455)	Entrance sensor does not detect paper.	Rt1, Rt2
-221	Entrance Sensor: Lag Error (D455)	Entrance sensor does not turn off.	Rt1, Rt2
-222	Skew Sensor: Late Error (D455)	Stopper sensor does not detect paper.	Rt1, Rt2
-223	Skew Sensor: Lag Error (D455)	Stopper sensor does not turn off.	Rt1, Rt2
-224	Exit Sensor: Late Error (D455)	Exit sensor does not detect paper.	Rt1, Rt2
-225	Exit Sensor: Lag Error (D455)	Exit sensor does not turn off.	Rt1, Rt2
-226	Trimming Blade Motor Lock (D455)	The machine detects a lock signal from the trimming blade motor.	Rt1, Rt2
-227	Cut Position Motor (D455)	The machine detects a lock signal from the cut position motor.	Rt1, Rt2

Jam Code	Display	Description	LCD Display
-228	Press Roller (D455)	The machine detects a lock signal from the press roller motor.	Rt1, Rt2
-229	Press/Stopper Roller (D455)	The machine detects a lock signal from the press stopper motor.	Rt1, Rt2
-230	Tray Motor (D455)	The machine detects a lock signal from the tray motor.	Rt1, Rt2

High Capacity Stacker SK5000 (D447)

Jam Code	Display	Description	LCD Display
-250	Entrance: Late Error (Stacker 1)	Entrance sensor (stacker 1) does not detect paper.	L1 to L5
-251	Entrance: Lag Error (Stacker 1)	Entrance sensor (stacker 1) does not turn off	L1 to L5
-252	Proof Tray Exit: Late Error (Stacker 1)	Proof tray exit sensor (stacker 1) does not detect paper.	L1 to L5
-253	Proof Tray Exit: Lag Error (Stacker 1)	Proof tray exit sensor (stacker 1) does not turn off.	L1 to L5
-254	Stack Tray Exit: Late Error (Stacker 1)	Shift tray exit sensor (stacker 1) does not detect paper.	L6
-255	Stack Tray Exit: Lag Error (Stacker 1)	Shift tray exit sensor (stacker 1) does not turn off.	L6
-256	Relay Path: Late Error (Stacker 1)	Transport sensor (stacker 1) does not detect paper.	L1 to L5
-257	Relay Path: Lag Error (Stacker 1)	Transport sensor (stacker 1) does not turn off.	L1 to L5
-258	Straight-Through Exit: Late Error (Stacker 1)	Exit sensor (stacker 1) does not detect paper.	L1 to L5

Jam Code	Display	Description	LCD Display
-259	Straight-Through Exit: Lag Error (Stacker 1)	Exit sensor (stacker 1) does not turn off.	L1 to L5
-260	Shift JG Motor (Stacker 1)	The machine detects a lock signal from the shift JG motor (stacker 1).	L6
-261	Proof Tray JG Motor (Stacker 1)	The machine detects a lock signal from the proof tray JG motor (stacker 1).	L6
-262	Shift Motor (Stacker 1)	The machine detects a lock signal from the shift roller motor (stacker 1).	L6
-263	Front Jogger Fence Motor (Stacker 1)	The machine detects a lock signal from the main jogger front motor (stacker 1).	L6
-264	Rear Jogger Fence Motor (Stacker 1)	The machine detects a lock signal from the main jogger rear motor (stacker 1).	L6
-265	Jogger Fence Retraction Mtr (Stacker 1)	The machine detects a lock signal from the main jogger fence retraction motor (stacker 1).	L6
-266	Sub Jogger Motor (Stacker 1)	The machine detects a lock signal from the sub jogger motor (stacker 1).	L6
-267	LE Stopper Motor (Stacker 1)	The machine detects a lock signal from the LE stopper motor (stacker 1).	L6
-268	Tray Lift Motor (Stacker 1)	The machine detects a lock signal from the tray lift motor (stacker 1).	L6
-269	Main Machine Setting Incorrect (Stacker 1)	The machine detects an error signal from the stacker due to the incorrect request sent by the mainframe.	L6
-270	Entrance: Late Error (Stacker 2)	Entrance sensor (stacker 2) does not detect paper.	L1 to L5
-271	Entrance: Lag Error (Stacker 2)	Entrance sensor (stacker 2) does not turn off	L1 to L5
-272	Proof Tray Exit: Late Error (Stacker 2)	Proof tray exit sensor (stacker 2) does not detect paper.	L1 to L5

Jam Code	Display	Description	LCD Display
-273	Proof Tray Exit: Lag Error (Stacker 2)	Proof tray exit sensor (stacker 2) does not turn off.	L1 to L5
-274	Stack Tray Exit: Late Error (Stacker 2)	Shift tray exit sensor (stacker 2) does not detect paper.	L6
-275	Stack Tray Exit: Lag Error (Stacker 2)	Shift tray exit sensor (stacker 2) does not turn off.	L6
-276	Relay Path: Late Error (Stacker 2)	Transport sensor (stacker 2) does not detect paper.	L1 to L5
-277	Relay Path: Lag Error (Stacker 2)	Transport sensor (stacker 2) does not turn off.	L1 to L5
-278	Straight-Through Exit: Late Error(Stacker 2)	Exit sensor (stacker 2) does not detect paper.	L1 to L5
-279	Straight-Through Exit: Lag Error(Stacker 2)	Exit sensor (stacker 2) does not turn off.	L1 to L5
-280	Shift JG Motor (Stacker 2)	The machine detects a lock signal from the shift JG motor (stacker 2).	L6
-281	Proof Tray JG Motor (Stacker 2)	The machine detects a lock signal from the proof tray JG motor (stacker 2).	L6
-282	Shift Motor (Stacker 2)	The machine detects a lock signal from the shift roller motor (stacker 2).	L6
-283	Front Jogger Fence Motor (Stacker 2)	The machine detects a lock signal from the main jogger front motor (stacker 2).	L6
-284	Rear Jogger Fence Motor (Stacker 2)	The machine detects a lock signal from the main jogger rear motor (stacker 2).	L6
-285	Jogger Fence Retraction Mtr (Stacker 2)	The machine detects a lock signal from the main jogger fence retraction motor (stacker 2).	L6
-286	Sub Jogger Motor (Stacker 2)	The machine detects a lock signal from the sub jogger motor (stacker 2).	L6

Jam Code	Display	Description	LCD Display
-287	LE Stopper Motor (Stacker 2)	The machine detects a lock signal from the LE stopper motor (stacker 2).	L6
-288	Tray Lift Motor (Stacker 2)	The machine detects a lock signal from the tray lift motor (stacker 2).	L6
-289	Main Machine Setting Incorrect (Stacker 2)	The machine detects an error signal from the stacker (stacker 2) due to the incorrect request sent by the mainframe.	L6

Perfect Binder (D391)

Jam Code	Display	Description	LCD Display
-300	P-Binder:Job Data Error	The machine detects a job data error.	Mk6
-301	P-Binder:S-Through Exit Sn:Late	S-Through exit sensor does not detect paper.	Mk7 to 8
-302	P-Binder:S-Through Exit Sn:Stay on	S-Through exit sensor does not turn off.	Mk8
-303	P-Binder:Cover Regist Sn:Late	Cover registration sensor does not detect paper.	Mk9, Mk10
-304	P-Binder:Cover Regist Sn:Stay on	Cover registration sensor does not turn off.	Mk9, Mk10
-305	P-Binder:Cover H-Reg. S Sn:Late	Cover horizontal registration S sensor does not detect paper.	Mk9, Mk10
-306	P-Binder:Cover H-Reg. S Sn:Stay on	Cover horizontal registration S sensor does not turn off.	Mk9, Mk10
-307	P-Binder:Cover H-Reg. L Sn:Late	Cover horizontal registration L sensor does not detect paper.	Mk9, Mk10
-308	P-Binder:Cover H-Reg. L Sn:Stay on	Cover horizontal registration L sensor does not turn off.	Mk9, Mk10
-309	P-Binder:Entrance Sn:Late	Entrance sensor does not detect paper.	Mk11

Jam Code	Display	Description	LCD Display
-310	P-Binder:Entrance Sn:Stay on	Entrance sensor does not turn off.	Mk11, Mk12
-311	P-Binder:Sign. Path: Sn 1:Late	Signature path sensor 1 does not detect paper.	Mk11, Mk12
-312	P-Binder:Sign. Path: Sn 1:Stay on	Signature path sensor 1 does not turn off.	Mk3 to 5, Mk12
-313	P-Binder:Sign. Path: Sn 2:Late	Signature path sensor 2 does not detect paper.	Mk3 to 5, Mk12
-314	P-Binder:Sign. Path: Sn 2:Stay on	Signature path sensor 2 does not turn off.	Mk3 to 5
-315	P-Binder:Timing Sn:Late	Timing sensor does not detect paper.	Mk3 to 5
-316	P-Binder:Timing Sn:Stay on	Timing sensor does not turn off.	Mk3 to 5
-317	P-Binder:Stck Tray Emp. Sn:Late	Stack tray empty sensor does not detect paper.	Mk3 to 5
-318	P-Binder:Stck Tray Emp. Sn:Stay on	Stack tray empty sensor does not turn off.	Mk3 to 5
-319	P-Binder:SG Paper Sn:Late	Sub grip paper sensor does not detect paper.	Mk3 to 5
-320	P-Binder:Cover Path: Sn 1:Late	Cover path sensor 1 does not detect paper.	Mk9 to 11
-321	P-Binder:Cover Path: Sn 1:Stay on	Cover path sensor 1 does not turn off.	Mk7, Mk9, Mk10
-322	P-Binder:Cover Path: Sn 2:Late	Cover path sensor 2 does not detect paper.	Mk7, Mk9, Mk10
-323	P-Binder:Cover Path: Sn 2:Stay on	Cover path sensor 2 does not turn off.	Mk7
-324	P-Binder:Cover Reg. Sn:Late	Cover registration sensor does not detect paper.	Mk9 to 11

Jam Code	Display	Description	LCD Display
-325	P-Binder:Cover Reg. Sn:Stay on	Cover registration sensor does not turn off.	Mk9 to 11
-326	P-B/Inserter:Com. Sn:Late	Inserter: Entrance sensor does not detect paper.	-
-327	P-B/Inserter:Com. Sn:Stay on	Inserter: Entrance sensor does not stay on.	Mk3 to 5, Mk12
-328	P-B/Inserter:U-Tray P-up Sn:Late	Inserter: Separation sensor: tray A does not detect paper.	Mk1
-329	P-B/Inserter:U-Tray P-up Sn:Stay on	Inserter: Separation sensor: tray A does not stay on.	Mk1
-330	P-B/Inserter:L-Tray P-up Sn:Late	Inserter: Separation sensor: tray B does not detect paper.	Mk1
-331	P-B/Inserter:L-Tray P-up Sn:Stay on	Inserter: Separation sensor: tray B does not stay on.	-
-332	P-B/Inserter:Trans. Sn 1:Late	Inserter: Vertical transport sensor 1 does not detect paper.	Mk1
-333	P-B/Inserter:Trans. Sn 1:Stay on	Inserter: Vertical transport sensor 1 does not stay on.	Mk1
-334	P-B/Inserter:Trans. Sn 2:Late	Inserter: Vertical transport sensor 2 does not detect paper.	Mk2
-335	P-B/Inserter:Trans. Sn 2:Stay on	Inserter: Vertical transport sensor 2 does not stay on.	Mk2
-336	P-B/Relay:Transport Sn:Late	Relay: Transport sensor does not detect paper.	Mk6
-337	P-B/Relay:Transport Sn:Stay on	Relay: Transport sensor does not stay on	Mk6, Mk11

Ring Binder RB5000 (D392)

Jam Code	Display	Description	LCD Display
-350	R-Binder:Entrance Sn:Late	Entrance sensor does not detect paper.	Mc1, Mc2
-351	R-Binder:Entrance Sn:Stay on	Entrance sensor does not turn off.	Mc1, Mc2
-352	R-Binder:Transport Sn:Late	Transport sensor does not detect paper.	Mc3, Mc4
-353	R-Binder:Transport Sn:Stay on	Transport sensor does not turn off.	Mc3, Mc4
-354	R-Binder:Exit Sn:Late	Exit sensor does not detect paper.	Mc3, Mc4
-355	R-Binder:Exit Sn:Stay on	Exit sensor does not turn off.	Mc3, Mc4
-356	R-Binder:Pre-punch Jam	Pre-punch jogger trigger sensor does not turn off.	Mc5, Mc6
-357	R-Binder:After-Punch Jam	Binder delivery sensor does not turn off.	Mc5, Mc6
-358	R-Binder:P TE Detect Sn Jam	Paper LE detect sensor does not turn off.	Mc7, Mc8
-359	R-Binder:P LE Detect Sn Jam	Paper LE detect sensor does not detect paper.	Mc7, Mc8
-360	R-Binder:Ring Error Jam	The machine detects a ring error.	Mc7, Mc8
-361	R-Binder:Binder Unit Set Jam	The machine cannot detect the binder unit.	Mc7, Mc8
-362	R-Binder:Output Belt 1 Jam	Output belt 1 HP sensor does not turn off.	Mc9
-363	R-Binder:Output Belt 2 Jam	Output belt 2 HP sensor does not turn off.	Mc9

Jam Code	Display	Description	LCD Display
-364	R-Binder:Stacker Jam	The machine detects an error at the stacker unit.	Mc10
-365	R-Binder:Punch Motor Error	The machine detects a lock signal from the punch motor.	Mc5, Mc6
-366	R-Binder:Shutter Motor Error	The machine detects a lock signal from the shutter motor.	Mc7, Mc8
-367	R-Binder:Line-up Pin M Error	The machine detects a lock signal from the alignment pin motor.	Mc7, Mc8
-368	R-Binder:Paper Jog Error	The machine detects an error signal from the pre-punch jogger unit.	Mc5, Mc6
-369	R-Binder:Line-up Pin Error	The machine detects an error signal from the pre-bind jogger unit.	Mc7, Mc8
-370	R-Binder:Clamp Motor Error	The machine detects a lock signal from the clamp motor.	Mc7, Mc8
-371	R-Binder:50/100 Adj. M Error	The machine detects a lock signal from the 50/100 clamp adjust motor.	Mc7, Mc8
-372	R-Binder:Out-Belt Rot. M Error	The machine detects a lock signal from the output belt rotation motor.	Mc9
-373	R-Binder:Job Data Error	The machine detects the job data error.	Mc

Buffer Pass Unit (M379)

Jam Code	Display	Description	LCD Display
-380	Buffer Pass Unit: Relay Sensor 1: Late	Transport sensor 1 does not detect paper.	Kc1
-381	Buffer Pass Unit: Relay Sensor 1: Stay on	Transport sensor 1 does not turn off.	Kc1

Jam Code	Display	Description	LCD Display
-382	Buffer Pass Unit: Relay Sensor 2: Late	Transport sensor 2 does not detect paper.	Kc2
-383	Buffer Pass Unit: Relay Sensor 2: Stay on	Transport sensor 2 does not turn off.	Kc2
-384	Buffer Pass Unit: Relay Sensor 3: Late	Transport sensor 3 does not detect paper.	Kc3
-385	Buffer Pass Unit: Relay Sensor 3: Stay on	Transport sensor 3 does not turn off.	Kc3
-386	Buffer Pass Unit: Relay Sensor 4: Late	Transport sensor 4 does not detect paper.	Kc4
-387	Buffer Pass Unit: Relay Sensor 4: Stay on	Transport sensor 4 does not turn off.	Kc4
-388	Buffer Pass Unit: Relay Sensor 5: Late	Transport sensor 5 does not detect paper.	Kc5
-389	Buffer Pass Unit: Relay Sensor 5: Stay on	Transport sensor 5 does not turn off.	Kc5
-390	Buffer Pass Unit: Relay Sensor 6: Late	Transport sensor 6 does not detect paper.	Kc6
-391	Buffer Pass Unit: Relay Sensor 6: Stay on	Transport sensor 6 does not turn off.	Kc6
-392	Buffer Pass Unit: Relay Sensor 7: Late	Transport sensor 7 does not detect paper.	Kc7
-393	Buffer Pass Unit: Relay Sensor 7: Stay on	Transport sensor 7 does not turn off.	Kc7
-394	Buffer Pass Unit: Relay Sensor 8: Late	Transport sensor 8 does not detect paper.	Kc8
-395	Buffer Pass Unit: Relay Sensor 8: Stay on	Transport sensor 8 does not turn off.	Kc8
-396	Buffer Pass Unit: Job Data Error	The machine detects the job data error.	Kc9

LCT-MF or LCIT RT5020 (D532)

Jam Code	Display	Description	LCD Display
-400	A3 LCT1:Exit Sn:Late	Exit sensor (LCT1 or LCT-MF) does not detect paper.	U
-401	A3 LCT1:Entrance Sn:Late	Entrance sensor (LCT1 or LCT-MF) does not detect paper.	U8
-402	A3 LCT1:Right Ver. Sn:Late	LCT right vertical sensor (LCT1 or LCT-MF) does not detect paper.	U8
-403	A3 LCT1:H-Trans. Ent. Sn:Late	LCT horizontal transport entrance sensor (LCT1 or LCT-MF) does not detect paper.	U8
-404	A3 LCT1:H-Trans. Exit Sn:Late	LCT horizontal transport exit sensor (LCT1 or LCT-MF) does not detect paper.	U
-405	A3 LCT1:V-Trans. Ent. Sn:Late	LCT vertical transport entrance sensor (LCT1 or LCT-MF) does not detect paper.	U
-406	A3 LCT2:Exit Sn:Late	Exit sensor (LCT2) does not detect paper.	U
-451	A3 LCT1:Entrance Sn:Stay on	Entrance sensor (LCT1 or LCT-MF) does not turn off.	U8
-452	A3 LCT1:Right Ver. Sn:Stay on	LCT right vertical sensor (LCT1 or LCT-MF) does not turn off.	U8
-453	A3 LCT1:H-Trans. Ent. Sn:Stay on	LCT horizontal transport entrance sensor (LCT1 or LCT-MF) does not turn off.	U8
-454	A3 LCT1:H-Trans. Exit Sn:Stay on	LCT horizontal transport exit sensor (LCT1 or LCT-MF) does not turn off.	U
-455	A3 LCT1:V-Trans. Ent. Sn:Stay on	LCT vertical transport entrance sensor (LCT1 or LCT-MF) does not turn off.	U
-456	A3 LCT2:Exit Sn:Stay on	Exit sensor (LCT2) does not turn off.	U

INDEX

S

Specifications.....39

MEMO

MEMO

MEMO

Model Pro C901S (PLUS)/ Pro C901 (PLUS) Machine Code: D095/M077 Appendices

3 December, 2012

TABLE OF CONTENTS

1. Appendix: Specifications

General Specifications....5

Mainframe....5

Supported Paper Sizes....24

Mainframe....24

Peripherals....28

Option Specifications....34

A3/11"x17" Tray Unit TK5000 (B331)....34

LCIT RT5030 (D452)....34

LCIT RT5050 (13"x19.2" LCT D532)....35

Multi-Bypass Tray (B833)....36

Cover Interposer Tray CI5010 (B835)....37

Z-Folding Unit ZF4000 (B660)....37

Finisher SR5000 (3K Finisher B830)....38

Punch Unit PU5000 (B831)....39

Booklet Finisher SR5020 (D434)....40

Trimmer Unit TR5020 (D455)....46

Ring Binder RB5000 (D392)....47

Perfect Binder D391....49

High Capacity Stacker SK5010 (D447)....52

Buffer Pass Unit (M379)....53

2. Appendix: Preventive Maintenance

PM Tables....55

Main Machine....55

LCIT RT5050 (D532)....61

LCIT RT5030 (D452)....61

Bridge Unit (D379)....62

Multi-Bypass Tray (B833)....62

Cover Interposer Tray (B835)....62

Z-Folding Unit (B660)....63

3000-Sheet Finisher (B830)....63

Punch (B831)....64

Booklet Finisher SR5020 (D434)....64

Trimmer Unit TR5020 (D455)....65
Ring Binder (D392)....65
High Capacity Stacker SK5010 (D447)....66
Perfect Binder/Inserter (D391)....67

3. Appendix: Service Call Conditions

Service Call Conditions....73
Service Call Table....73
SC Code Descriptions....73
Service Call Tables - 1....75
SC Codes Group 1: Scanning....75
Service Call Tables - 2....83
SC Codes Group 2: Exposure....83
Service Call Tables - 3....90
SC Codes Group 3: Image Development – 1....90
Service Call Tables - 4-1....101
SC Codes Group 4: Image Development - 2....101
Service Call Tables - 4-2....117
Service Call Tables - 5-1....133
SC codes Group 5: Paper Feed....133
Service Call Tables - 5-2....151
SC codes Group 5: Paper Feed....151
Service Call Tables - 6....170
SC Codes Group 6: Device Communication....170
Service Call Tables - 7-1....188
SC Codes Group 7: Peripherals....188
Service Call Tables - 7-2....213
SC Codes Group 7: Peripherals....213
Service Call Tables - 8....315
SC800: Overall System....315
Service Call Tables - 9....328
SC900: Miscellaneous....328

4. Appendix: Service Program Mode Tables

System SP1-xxx: 1....333

SP1-xxx Feed....333
System SP1-xxx: 2....345
System SP1-xxx: 3....365
System SP1-xxx: 4....374
System SP1-xxx: 5....382
System SP2-xxx: 1....406
SP2-xxx Drum: 1....406
System SP2-xxx: 2....426
System SP2-xxx: 3....454
System SP2-xxx: 4....470
System SP2-xxx: 5....494
System SP2-xxx: 6....518
System SP3-xxx: 1....540
SP3-xxx Process....540
System SP3-xxx: 2....564
System SP4-xxx: 1 (D095 only)....591
SP4-xxx Scanner....591
System SP4-xxx: 2 (D095 only)....602
System SP5-xxx....614
SP5-XXX (Mode)....614
System SP5-xxx: 2....636
System SP5-xxx: 3....651
System SP6-xxx....673
SP6-xxx Peripherals....673
System SP7-xxx: 1....696
SP7-XXX (Data Log)....696
System SP7-xxx: 2....710
System SP7-xxx: 3....728
System SP8-xxx: 1....746
SP8-xxx: Data Log2....746
System SP8-xxx: 2....767
Input Check: 1....783
Main Machine Input Check: SP5803....783

Input Check: 2....796
Main Machine Input Check: SP5803....796
Input Check: 3....808
Main Machine Input Check: SP5803....808
Input Check: 4....822
Main Machine Input Check: SP5803....822
ADF Input Check: SP6007 (D095 only)....823
Finisher Input Check: SP6112 (B830)....824
Booklet Finisher Input Check (D434): SP6218....825
Cover Interposer Input Check (B835): SP6400....828
Ring Binder Input Check (D392): SP6508....830
Perfect Binder Input Check (D391): SP6526....832
High Capacity Stacker Input Check (D447): SP6600/SP6606....837
Trimmer Unit Input Check (D455): SP6650....839
Output Check....840
Main Machine Output Check: SP5804....840
ADF Output Check: SP6008 (D095 only)....849
Finisher Output Check SP6113 (B830)....849
Booklet Finisher Output Check: SP6219 (D434)....851
Cover Interposer (B835) Output Check: SP6401....853
Ring Binder (D392) Output Check: SP6509....853
High Capacity Stacker Output Check (D447): SP6601/SP6607....854
Trimmer Unit Output Check (D455): SP6651....855
Printer and Scanner SP Tables....856
Printer SP....856
Scanner SP (D095 only)....856

1. Appendix: Specifications

General Specifications

Mainframe

Engine

Items		Specification
Configuration		Console
Copy Process		4-drum dry electrostatic transfer system with internal transfer belt
Fusing		Oil-less fusing method
Engine Speed	FC	90 ppm A4/LT(LEF) 50 ppm A3/DLT(LEF)
	BK	90 ppm A4/LT(LEF) 50 ppm A3/DLT(LEF)
Warm-up Time		**Printer (M077):** Less than 420 s (23C°, rated voltage) **Copier (D095):** Less than 420 s (23C°, rated voltage)
First Print Time		**Printer (M077):** FC: Less than 13.5 sec BW: Less than 13.5 sec **Copier (D095):** FC: Less than 13.5 sec BW: Less than 13.5 sec (A4/LT(LEF), Tray 1 or Op. LCT upper tray Face-up)
Multiple print		Up to 9,999

Resolution		1,200 dpi, 2-bit
Limitless Paper Supply		Supported
Paper Size		Please refer to "Paper size matrix".
Maximum Printable Area		320 mm x 480 mm / 12.6" x 18.9"
Paper weight	1st tray	60 - 220g/m^2 16 - 58 lb Bond/ 80 lb Cover/ 120 lb Index
	2nd tray	60 - 220g/m^2 16 - 58 lb Bond/ 80 lb Cover/ 120 lb Index
	3rd tray **(D095 only)**	60 - 350 g/m^2 16 - 79 lb Bond/ 140 lb Index/ 100 lb Cover
	4th tray **(D095 only)**	60 - 350 g/m^2 16 – 79 lb Bond/ 140 lb Index/ 100 lb Cover
	Duplex	60 - 350g/m^2 16 - 79 lb Bond/ 80 lb Cover/ 120 lb Index
Paper weight setting		Paper Weight 1 (60.0 - 63.0 g/m^2) Paper Weight 2 (63.1 - 80.0 g/m^2) Paper Weight 3 (80.1 - 105.0 g/m^2) Paper Weight 4 (105.1 - 163.0 g/m^2) Paper Weight 5 (163.1 - 220.0 g/m^2) Paper Weight 6 (220.1 - 256.0 g/m^2) Paper Weight 7 (256.1 - 300.0 g/m^2)
Power Specification	NA	208V-240V, 24A, 50/60Hz
	EU/ASIA	220/230/240V, 25A, 50/60Hz

Max. Power Consumption	Printing: Less than 5,500W Stand-by: Less than 3,200W Full System • Finisher SR5000 • Booklet Finisher BK5000 • Z-folding Unit ZF4000 • Cover Interposer Tray CI5010 • LCIT RT5020 • Multi-Bypass Tray BY5000
Noise emission: Sound power level	Stand-by: Less than 67 dB (A) Printing: Less than 76 dB (A) (Main unit only) Sound power level is actual values measured in accordance with ISO 7779.
Dimension (W x D x H)	**Printer (M077):** 1,280 x 990 x 1,640 mm (50.4" x 39.0" x 64.6") **Copier (D095):** 2,555 x 990 x 1,640 mm (100.6" x 39.0" x 64.6")
Weight	**Printer (M077):** Approx. 630 kg, 1389.2 lb. or less (Excluding Fiery) **Copier (D095):** Approx. 860 kg, 1896.3 lb or less (Excluding Fiery)
ARDF	**Printer (M077):** Not available **Copier (D095):** Standard

Paper Capacity	Standard	1st tray: 1,000 sheets x 2 (Tandem)
		2nd tray: 500 sheets
		3rd tray (D095 only): 2,200 sheets 13"x19.2" LCT
		4th tray (D095 only): 2,200 sheets 13"x19.2" LCT
Paper selection with A4 LCT **(M077 only)**		Auto Paper Selection
		Tray 1, Tray 2
		Tray 3, Tray 4, Tray 5 A4 LCT option is required.
Paper selection with A3 LCT		Auto Paper Selection
		Tray 1, Tray 2
		Tray 3, Tray 4 • Standard for Copier (D095) • A3 LCT option is required for Printer (M077).
		Tray 5, Tray 6 • A3 LCT option (including Bridge Unit (D379)) is required for Copier (D095). • By-pass option or Two A3 LCT options (including Bridge Unit (D379)) are required for Printer (M077).
		Tray 7 • By-pass option and A3 LCT option (including Bridge Unit (D379)) are required for Copier (D095). • By-pass option and Two A3 LCT options (including Bridge Unit (D379)) are required for Printer (M077).

Displayed Paper Types	Plain Paper, Recycled Paper, Yellow, Green, Blue, Ivory, Orange, Pink, Red, Gray, Letterhead, Preprinted Paper, Prepunched Paper, Envelope, Tab Stock*, Label Paper, Coated:Glossy, Coated:Matted *: Tab stock is not used for Tray1.
Electronic Sorting	Supported (with Finisher)
Stapling	Supported, 4 positions (with Finisher)
Punch	NA: 2/3 switchable hole punch (with Finisher) EU: 2/4 switchable hole punch (with Finisher) Scandinavian: 4 holes punch (with Finisher)

Copier (D095 only)

Items			Specifications
Original Type			Book/ Sheet/ Object
Original size			Max: A3/ 11" x 17" Min: A5, 5 1/2" x 8 1/2"
Copy/Print size			A3-A5, Up to 330 mm x 458 mm 11" x 17"-5 1/2 x 8 1/2, 13" x 18"
First Copy Output Time		FC	Less than 13.5 s (A4/LT (LEF), 1st input tray or Std LCT upper tray, Face-up)
		Bk	Less than 13.5 s (A4/LT (LEF), 1st input tray or Std LCT upper tray, Face-up)
Multi copy speed	Memory retention	FC	90 cpm (A4/LT (LEF))
		Bk	90 cpm (A4/LT (LEF))
	ADF 1 to 1	FC	60 cpm (A4/LT (LEF))
		Bk	80 cpm (A4/LT (LEF))
Multi copy			Up to 9,999

Items		Specifications
Resolution	Copy	1,200dpi 2 bits
	Print	1,200dpi 2 bits
	Scan copy	600dpi 8 bits
	Scan send	600dpi 1bit/ 8 bits
Magnification	NA ver.	7 Reductions & 5 Enlargement 93%, 85%, 78%, 73%, 65%, 50%, 25% 121%, 129%, 155%, 200%, 400%
	EU ver.	7 Reductions & 5 Enlargement 93%, 82%, 75%, 71%, 65%, 50%, 25% 115%, 122%, 141%, 200%, 400%
Auto Magnification Select (AMS)		Supported
Zoom		25 - 400% (1%/ step)
Size Magnification		Supported
Directional Magnification		Supported (1%/ step)
Directional Size Magnification		Supported (1 mm or 0.1 inch/ step
Full Image Copy		Supported (93% and Centering)
Interrupt Copy		Standard
Image Density		Auto Image Density
		Manual Selection (9 Levels)
Color Model		Auto Color Selection
		Full Color
		Black & White
		Single Color (Default: 12 colors & Black, User Color: 15 colors)
		Twin-Color (Black & Other color, Red & Black)

Items	Specifications
Original Type Setting	Text
	Text/Photo
	Photo
	Map
	Pale
	Generation
	Inkjet
	Highlight Pen
Paper Selection	Auto Paper Selection
	1st Tray
	2nd Tray
	3rd Tray
	4th Tray
	5th Tray (LCT option is required.)
	6th Tray (LCT option is required.)
	7th Tray (LCT and Bypass tray are required.)
Displayed Paper Type	Plain Paper, Recycled Paper, Yellow, Green, Blue, Ivory, Orange, Pink, Red, Gray, Letterhead, Preprinted Paper, Prepunched Paper, Envelope, Tab Stock*, Label Paper, Coated:Glossy, Coated:Matted *: Tab stock is not used for Tray1.
Duplex	1 side to 2 side
	2 side to 2 side
	Book to 2 side
	Front & Back to 2 side

Items		Specifications
Book / Series Combine	Book	Booklet Magazine
	Series	Book to Simplex Book to Duplex Front & Back to 2 sided
	Combine	Combine 2, 4, 8 into 1 simplex sheet Combine 4, 8, 16 into 1 duplex sheet
Margin Adjustment		Supported (1mm or 0.1 inch)
Erase 3 edge	Inside Outside Center/Border	Supported
Cover / Slip sheet	Front	Copy or Blank (Copy: Duplex or Simplex)
	Front & Back	Copy or Blank (Copy: Duplex or Simplex)
	Slip	Copy or Blank
Chaptering		Supported (Up to 100 positions)
Paper Designate		Supported (can select from 3 trays. Up to 100 positions)
Image Rotation		Supported
Electronic Sort		Supported (With finisher)
Stapling		Supported, 4 positions (With finisher)
Punch		USA: 2/3 switchable hole punch EU: 2/4 switchable hole punch Scandinavian: 4 holes punch (With finisher)

Items		Specifications
Stamp	Background Numbering	Supported
	Page Numbering	7 stamps
	Date Stamp	6 stamps
	User Stamp	5 stamps
	Preset Stamp	8 stamps
	Stamp Text	Supported
Image Adjustment	Color Adjustment	Color Balance Adjustment
		Color Balance Program
		Color Registration
	Image Adjustment	Sharp / Soft
		Contrast
		Background Density Adjustment
		Under Color Removal
		Auto Color Selection Sensitivity Adjustment
		Text-Photo Separation Sensitivity Adjustment
		Color Erase Sensitivity Adjustment
		Auto Color Calibration (ACC)
User Code		8 digits / 500 user code
Interrupt Copy		Supported
Copy Counter	NA Model	Electrical and Mechanical counter x2
	EU Model	Electrical and Mechanical counter x1
Counterfeit Prevention		Bill Recognition & Invisible Marking Function

Supported Operating Systems

Utility	Windows 2000, XP/ 2003 / Vista	Mac OS X
Print Submission & Management		
EFI Driver	YES	YES
EFI Command Workstation	YES	NO
EFI Command Workstation for Mac	NO	YES
Fiery Web Tools	YES	YES
EFI HotFolder	YES	YES
MS Office Filter for HotFolder	YES	NO
EFI Virtual Printers	YES	*1
Macintosh Print Center Plug-ins	NO	YES
Rush Printing	YES	NO
Print/Process Next	YES	NO
Advanced Job Re-Order	YES	NO
Suspend on Mismatch	YES	YES
Quick Doc Merge	YES	NO
Schedule Print	YES	YES
Color Management & Proofing		
EFI Fiery ColorWise	YES	YES
Fiery Graphic Arts package	YES	YES
Imposition & Document Assembly		
Mixed Media	YES	YES
Paper Catalogue	YES	YES
Tab Shift	YES	YES
Insert Tab	YES	YES

Utility	Windows 2000, XP/ 2003 / Vista	Mac OS X
Booklet Maker	YES	YES
EFI Impose, Fiery Edition	YES	NO
Variable Data Printing		
EFI Fiery Free Form	YES	YES
Fiery VDP Resource Manager	YES	YES
Scanning		
Fiery Scan	YES	YES
Color management & Proofing		
Fiery Graphic Arts Package, Premium Edition	YES	YES
EFI Color Profiler Suite	YES	YES
Imposition & Document Assembly		
EFI Compose Fiery Edition	YES	NO

* 1: Users can access Virtual Printers both in Windows and Mac environments, but cannot create a virtual printer nor predefine its print settings in Mac OS.

ARDF (D095 only)

Original Size:	Normal Original Mode:	A3 to B5, 11" x 17" to 51/2" x 81/2"
	Thin Original Mode	A3 to B5, 11" x 17" to 51/2" x 81/2"
	Duplex Original Mode:	A3 to B5, 11" x 17" to $5_{1/2}$" x $8_{1/2}$"
Original Weight:	Normal Original Mode:	52 to 128 g/m^2 (Note 1)
	Thin Original Mode	40 to 128 g/m^2 (Note 1)
	Duplex Original Mode:	52 to 105 g/m^2 (Note 2)

Table Capacity:	100 sheets (80 g/m^2, 20 lb)
Original Feeding Speed:	80 cpm (A4/8$_{1/2}$" x 11" LEF, 1 to 1)
Original Standard Position:	Rear left corner (Face-up)
Separation:	FRR
Original Transport:	One flat belt
Original Feed Order:	From the top original
Power Source:	DC24V±10%, DC38V±10%, DC5V±5% (from the copier)
Power Consumption:	Less than 130 W
Dimensions (W x D x H):	680 x 560 x 150 mm (26.8" x 22" x 5.9")
Weight	Less than 17.5 kg (38.5 lb)

Note 1: 156 g/m^2 possible, but not guaranteed.

Note 2: 128 g/m^2 possible, but not guaranteed.

Controller Specifications

GW Controller

Items	Specifications
CPU	Intel Pentium M 1.4GHz
Memory	D095: 2.5 GB M077: 1.5 GB
HDD	640 GB
Interface	100/10Base-TX x 2
	SD Slot x 2 (GW application installation, Service use)
	USB2.0 (External appliance)
	Counter Interface Slot (Counter Interface)
Network Protocol	Network: TCP/IP (Ipv4, Ipv6)

Fiery Controller

Note

- The below is description for standard Fiery controller. Please refer to the QX/Creo Controller regarding printer features of them.

Items	Specifications	
Fiery System Version	Fiery System 8 Release 2	
Configuration	Standard: External Server Type	
CPU	Single Intel Core 2 Duo E8400 3.0GHz CPU	
Memory	2GB (2GBx1)	
HDD	160 GB HDD standard	
DVD-ROM Drive	Built-in	
Operating System	Windows XPe	
Network Protocols	TCP/IP_IPv4, IPv6 Apple Talk SMB	
PDL	PostScript 3 PCL 5c PCL 6 • Remarks: PCL5 does not support the finishing of Ring Binder and Perfect Binder.	
Supported Data Formats	PDF TIFF JPEG	
VDP	PPML Fiery Free Form Creo VPS	
Max Continuous Printing Speed	FC	90ppm (A4 or Letter LEF/ 1200dpi)
	BK	90ppm (A4 or Letter LEF/ 1200dpi)

Items	Specifications
Print Resolution	1200dpi/ 2bit 600dpi in PCL5c
Font	PS3 136 + 2MM
	PCL 80
Fiery Menu via Operation Panel	Supported
Network Interface	Ethernet 1000/100/10base-T
Service Interface	USB x 4, Technical Service Use
Power Specification	100 - 240 V / 6.0 A, 50/60 Hz
Power consumption	Less than 350 W

Scanner Specifications (D095 only)

GW Scanner Feature

Original type		Book / Sheet / Object
Resolution		100 / 150 / **200 (Default)** / 300 / 400 / 600 dpi 100-1,200 dpi (Twain: BW) 100-1,200 dip (Twain: Color)
Scan Speed (A4, 200dpi)		BW and FC: 75 spm *Scan speed (A4 LEF, 200 dpi)
Max Scan Area		297 x 432 mm / 11.7"x17"
Original Size	Standard	A3 SEF, A4 SEF, A4 LEF, A5 SEF, A5 LEF, B4 SEF, B5 SEF, B5 LEF 11"x17" SEF, 8 1/2"x14" SEF, 8 1/2"x13" SEF, 8 1/2x11" SEF, 8 1/2"x11" LEF, 5 1/2"x8 1/2" SEF, 5 1/2x8 1/2" LEF
	Customized	Minimum: 140 x 140 mm Maximum: 297 x 432 mm

File Format		TIFF (Multi/Single), JPEG, PDF (Multi/Single), High compression PDF
Scan Mode	Default	BW Text/Line Art
	Support	BW_Text, BW_Text-Photo, BW_Photo, Grayscale, FC_Text-Photo, FC_Photo, Auto Color Selection
Image Density	Auto Density Selection	Supported
	Manual Setting	7 Levels
Thin paper mode		Supported
SADF / Batch Mode		Supported
Mixed Size Mode		Supported

GW Scan to E-mail

Requirement	SMTP Gateway and TCP/IP
Authentication	SMTP POP before SMTP
Resolution	Default: 200 dpi 100 / 150 / 200 / 300 / 400 / 600 dpi
Register E-mail Address in HDD	Max. 2,000 addresses
Register Group Address in HDD	Max. 500 Addresses Max. 100 Addresses in One Group Addresses
Maintain E-mail Address in HDD	Direct input on operation panel, Web image Monitor, Smart Device Monitor
Search E-mail Address in HDD	By name & E-mail address
LDAP	Yes
Max Address Number per Send	Max. 500 addresses

Address Number per send	via Address Book	Max. 500 addresses
	Direct Input	Max. 100 addresses
	via LDAP	Max. 100 addresses
Attention		To, cc, bcc
Subject	Manual Input	Max. 128 characters
Body Message	Manual Input	Max. 80 characters
	Pre-register by user	5 body message. 80 characters x 5 lines per a body message. Title name of the body message: Max. 20 characters per a name.
	Preset	Message: "This e-mail included attached file sent from xxxx" (machine model name).
E-mail Size Restriction	With restriction	128-102,400KB, Default = 2,048 KB
	W/O restriction	975 MB
File Type		Single Page TIFF, Single Page JPEG, Single Page PDF, Multi Page TIFF, Multi Page PDF, Single Page High-compression PDF, Multi Page High-compression PDF
Program User Setting		Yes (Up to 25 programs)
Divided & Send E-mail		Yes (By page or size) / No, Default = Yes (By size)
Resend		Yes / No, Default = Yes

GW Scan to Folder

Protocol Support	SMB, FTP, NCP
Security	Client folder log-in (log-in name and password) Encryption of log-in name and password during transmission
Resolution	Default: 200dpi 100, 150, 200, 300, 400, 600dpi
Max. Resisted Client Folder Address in HDD	Max. 2,000 folders

Maintain Client Folder Address in HDD	Via Operation Panel, Web Image Monitor
Max. Client Folders per send	Max. 50 client folders
Group Address	Max. 100 destinations (To Folder: 50, To e-mail: 100) *1
Input Subject	No
Scan file size	1 document Up to 2,000 MB
File size when combined Scan to Folder & Scan to E-mail	128-102,400 KB, Default = 2,048 KB (With restriction) 725 MB (W/O restriction) (Conforming to the scan to e-mail specification)
File Type	Single Page TIFF/JPEG, Single Page PDF, Multi Page TIFF, Multi Page PDF, Single Page High-compression PDF, Multi Page High-compression PDF
Program Registration	Yes (Up to 25 programs)
Dividing file in Scan to E-mail	Yes (By page or size) / No, Default = Yes (By size) (When Scan to PC is combined with Scan to e-mail)
Resend	Yes / No, Default = Yes

*1. The user can send to Max 100 destinations in the same group. But the number of folders has to be less than 50, because Max. folder destinations are 50. If there are more than 50 folder destinations registered in Group address, the following message pops up.

- 100 destinations 50 folders included >>>OK
- 100 destinations 51 folders included >>>NG

Max. address numbers per sending (Combination between E-mail and Folder)

	Input via	Condition 1 Max. address can select or input	Condition 2 Max. address allow in single operation	Condition 3 Combination of address: Max.
Scan to E-mail	Address book	500	500	550
	Manual input	100	500	550

Scan to Folder	Address book	50	50	550
	Manual input	50	50	550

The number of destinations which the user can put has to satisfy all of the above 3 conditions

GW Network Twain Driver

Correspondence OS	Windows 2000/XP/Vista Windows Server 2003, Server 2003R2
Resolution	100-1200 dpi
Scan Mode	Standard, Photo, OCR, Filing
Image Adjustment	Brightness, Contrast, Threshold, Gamma Adjustment, Halftone Pattern
Stamp	Date, Page Number, Text
Endorse	Supported

Fiery Scanner Specification

Resolution		100 / 150 / 200* / 300 / 400 / 600 dpi
Scan Speed (A4, 200dpi)		BW&FC: 50 spm (Single side, Normal scan mode)
Max Scan Area		297 mm x 432 mm
Original Size	Standard	A3, B4, A4, B5, A5, Letter, 11 x17, 8.5 x14, 8.5 x13, 5.5 x8.5
	Customized	297 mm x 432 mm
File Format		TIFF, JPEG, PDF
Scan Type		Black & White: Text/Line Art * Black & White: Text Black & White: Text/Photo Black & White: Photo Grayscale Full Color: Text/Photo Full Color: Glossy Photo

Side	Single * Top/top Top/bottom
Orientation	Portrait * Landscape
Destination	Hold Queue Mailbox E-Mail FTP Internet fax SMB

*: Default value

Fiery Scan to E-mail

Registered E-mail Address in Address Book		1,000
Address Number per send	Address Book	24 K for total size of To and Cc
	LDAP	24 K for total size of To and Cc
Email to scan mode	Attachment	Attachment/URL When URL is specified, the email will be sent with a URL linked to the HDD of the Fiery server where the scanned data is stored.
	Format	TIFF, JPEG, PDF

Fiery Scan to FTP/SMB

FTP server	Server Name/ IP address, Directory, Port Number can be set.
Timeout	30 s (0 – 999 sec can be set)
Authentication	User Name, Password can be set.
Proxy server setup	The setup for the FTP server is available.
SMB setup	Network path/ Domain name can be set.
Authentication	User Name, Password can be set.

Supported Paper Sizes

Mainframe

Trays 1 and 2 (Engine)

		Tray 1 1,000 x 2		Tray 1 with A3/DLT kit	Tray 2 500 x 2	
Paper	Size	NA	EU	NA/EU	NA	EU
A3 SEF	297x420	---	---	SPS	AD	AD
B4 SEF	257x364	---	---	SPS	AD	AD
A4 LEF	297x210	SPS	A	SPS	AD	AD
A4 SEF	210x297	---	---	SPS	AD	AD
B5 LEF	257x182	---	---	---	AD	AD
B5 SEF	182x257	---	---	---	AD	AD
A5 SEF	148x210	---	---	---	AD	AD
DLT SEF	8.5"x11"	---	---	A	AD	AD
LG SEF	8.5"x14"	---	---	SPS	AD	AD
LT LEF	11"x8.5"	A	SPS	SPS	AD	AD
LT SEF	8.5"x11"	---	---	SPS	AD	AD
HLT SEF	5.5"x8.5"	---	---	---	AD	AD
Foolscap SEF	8.5"x13"	---	---	---	AD	AD
Folio SEF	8.25"x13"	---	---	---	AD	AD
F SEF	8"x13"	---	---	---	AD	AD
Executive LEF	10.5"x7.25"	---	---	---	AD	AD

		Tray 1 1,000 x 2		Tray 1 with A3/DLT kit	Tray 2 500 x 2	
Paper	Size	NA	EU	NA/EU	NA	EU
Executive SEF	7.25"x10.5	---	---	---	AD	AD
- SEF	11"x15"	---	---	---	#S	#S
- SEF	11"x14"	---	---	---	#S	#S
- SEF	10"x15"	---	---	---	#S	#S
- SEF	10"x14"	---	---	---	#S	#S
- SEF	8.25"x14"	---	---	---	#S	#S
- SEF	10.5"x8"	---	---	---	#AU	#AU
- SEF	8"x10.5"	---	---	---	#AU	#AU
- SEF	10"x8"	---	---	---	#AU	#AU
- SEF	8"x10"	---	---	---	#S	#S
- SEF	13"x19.2"	---	---	---	---	---
- SEF	13"x18"	---	---	---	#AU	#AU
SRA3 SEF	320x450	---	---	---	#S	#S
- SEF	12"x18"	---	---	---	AD	AD
Custom size mm Width	Min.	---	---	210.0 #AS	139.7 #AU	
	Max.	---	---	305.0 #AS	330.2 #AU	
Length	Min.	---	---	210.0 #AS	182.0 #AU	
	Max.	---	---	439.0 #AS	458.0 #AU	
Custom size Inch Width	Min.	---	---	#AS	5.5 #AU	
	Max.	---	---	#AS	13.0 #AU	

		Tray 1 1,000 x 2		Tray 1 with A3/DLT kit	Tray 2 500 x 2	
Paper	Size	NA	EU	NA/EU	NA	EU
Length	Min.	---	---	#AS	7.17 #AU	
	Max.	---	---	#AS	18.03 #AU	

Remarks

SEF	Short Edge Feed
LFE	Long Edge Feed
A	Paper size to be set in Unit
S	Paper size to be set by SP mode
AD	Paper size to be detected automatically. Paper size can be selected by UP mode/ Select paper size from the list on OP panel.
#AD	Paper size to be detected automatically.
#S	Paper size setting is required by UP mode/ Select paper size from the list on OP panel.
SPS	Paper size setting is required by SP mode/ Select paper size from the list on OP panel
#AU	Paper size setting is required by UP mode/ Input actual paper size manually on OP panel
#AS	Paper size setting is required by SP mode/ Input actual paper size (mm only) manually on OP panel
---	Not supported

Trays 3 and 4 (LCT-MF: D095 only)

		LCT-MF (Trays 3 and 4)	
		2,000 x 2	
Paper	Size	NA	EU
A3 SEF	297x42	AD	---

		LCT-MF (Trays 3 and 4)	
		2,000 x 2	
Paper	Size	NA	EU
B4 SEF	257x364	AD	---
A4 LEF	297x210	AD	A
A4 SEF	210x297	AD	---
B5 LEF	257x182	AD	SPS
B5 SEF	182x257	#S	---
A5 SEF	148x210	AD	SPS
DLT SEF	8.5"x11"	AD	---
LG SEF	8.5"x14"	#S	---
LT LEF	11"x8.5"	AD	SPS
LT SEF	8.5"x11"	#S	---
HLT SEF	5.5"x8.5"	AD	SPS
Foolscap SEF	8.5"x13"	#S	---
Folio SEF	8.25"x13"	#S	---
F SEF	8"x13"	AD	---
Executive LEF	10.5"x7.25"	#S	---
Executive SEF	7.25"x10.5	#S	---
- SEF	11"x15"	#S	---
- SEF	11"x14"	#S	---
- SEF	10"x15"	#S	---
- SEF	10"x14"	#S	---
- SEF	8.25"x14"	#S	---
- SEF	10.5"x8"	#AU	---
- SEF	8"x10.5"	#AU	---

		LCT-MF (Trays 3 and 4)	
		2,000 x 2	
Paper	Size	NA	EU
- SEF	10"x8"	#AU	---
- SEF	8"x10"	#S	---
- SEF	13"x19.2"	#AU	---
- SEF	13"x18"	#AU	---
SRA3 SEF	320x450	#S	---
- SEF	12"x18"	AD	---
Custom size mm Width	Min.	139.7 #AU	
	Max.	330.2 #AU	
Length	Min.	182.0 #AU	
	Max.	487.7 #AU	
Custom size Inch Width	Min.	5.5 #AU	
	Max.	13.0 #AU	
Length	Min.	7.17 #AU	
	Max.	19.2 #AU	

Peripherals

For Printer (M077) and Copier (D095)

		A3/DLT LCT (2000 x2)		Bypass (500)	
Paper	Size	NA	EU	NA	EU
A3 SEF	297x420	AD	---	AD	AD
B4 SEF	257x364	AD	---	AD	AD
A4 LEF	297x210	AD	A	AD	AD

		A3/DLT LCT (2000 x2)		Bypass (500)	
A4 SEF	210x297	AD	---	#S	AD
B5 LEF	257x182	AD	SPS	AD	AD
B5 SEF	182x257	#S	---	#S	#S
A5 SEF	148x210	AD	SPS	AD	AD
DLT SEF	8.5"x11"	AD	---	AD	AD
LG SEF	8.5"x14"	#S	---	#S	#S
LT LEF	11"x8.5"	AD	SPS	AD	AD
LT SEF	8.5"x11"	#S	---	AD	#S
HLT SEF	5.5"x8.5"	AD	SPS	AD	AD
Foolscap SEF	8.5"x13"	#S	---	#S	#S
Folio SEF	8.25"x13"	#S	---	#S	#S
F SEF	8"x13"	AD	---	AD	AD
Executive LEF	10.5"x7.25"	#S	---	#S	#S
Executive SEF	7.25"x10.5	#S	---	#S	#S
- SEF	11"x15"	#S	---	#S	#S
- SEF	11"x14"	#S	---	#S	#S
- SEF	10"x15"	#S	---	#S	#S
- SEF	10"x14"	#S	---	#S	#S
- SEF	8.25"x14"	#S	---	#S	#S
- SEF	10.5"x8"	#AU	---	#AU	#AU
- SEF	8"x10.5"	#AU	---	#AU	#AU
- SEF	10"x8"	#AU	---	#AU	#AU
- SEF	8"x10"	#S	---	#S	#S
- SEF	13"x19.2"	#AU	---	#AU	#AU
- SEF	13"x18"	#AU	---	#AU	#AU

		A3/DLT LCT (2000 x2)		Bypass (500)	
SRA3 SEF	320x450	#S	---	#S	#S
- SEF	12"x18"	AD	---	AD	AD
Custom size mm Width	Min.	139.7 #AU		139.7 #AU	
	Max.	330.2 #AU		330.2 #AU	
Length	Min.	182.0 #AU		182.0 #AU	
	Max.	487.7 #AU		487.7 #AU	
Custom size Inch Width	Min.	5.5 #AU		5.5 #AU	
	Max.	13.0 #AU		13.0 #AU	
Length	Min.	7.17 #AU		7.17 #AU	
	Max.	19.2 #AU		19.2 #AU	

Remarks

SEF	Short Edge Feed
LEF	Long Edge Feed
A	Paper size to be set in Unit
S	Paper size to be set by SP mode
AD	Paper size to be detected automatically. Paper size can be selected by UP mode/ Select paper size from the list on OP panel.
#AD	Paper size to be detected automatically.
#S	Paper size setting is required by UP mode/ Select paper size from the list on OP panel.
SPS	Paper size setting is required by SP mode/ Select paper size from the list on OP panel
#AU	Paper size setting is required by UP mode/ Input actual paper size manually on OP panel
#AS	Paper size setting is required by SP mode/ Input actual paper size (mm only) manually on OP panel
---	Not supported

For Printer (M077 only)

		A4/LT LCT		
		1,000 x 2	2,500	
Paper	Size (mm)	NA/EU	NA	EU
A3 SEF	297x420	---	---	AD
B4 SEF	257x364	---	---	AD
A4 LEF	297x210	#AD	SPS	AD
A4 SEF	210x297	---	---	#S
B5 LEF	257x182	#AD	SPS	AD
B5 SEF	182x257	---	---	#S
A5 SEF	148x210	#AD	SPS	AD
DLT SEF	8.5"x11"	---	---	AD
LG SEF	8.5"x14"	---	---	#S
LT LEF	11"x8.5"	#AD	A	AD
LT SEF	8.5"x11"	---	---	AD
HLT SEF	5.5"x8.5"	#AD	SPS	AD
Foolscap SEF	8.5"x13"	---	---	#S
Folio SEF	8.25"x13"	---	---	#S
F SEF	8"x13"	---	---	AD
Executive LEF	10.5"x7.25"	---	---	#S
Executive SEF	7.25"x10.5	---	---	#S
- SEF	11"x15"	---	---	#S

		A4/LT LCT		
		1,000 x 2	2,500	
Paper	Size (mm)	NA/EU	NA	EU
- SEF	11"x14"	---	---	#S
- SEF	10"x15"	---	---	#S
- SEF	10"x14"	---	---	#S
- SEF	8.25"x14"	---	---	#S
- SEF	10.5"x8"	---	---	#AU
- SEF	8"x10.5"	---	---	#AU
- SEF	10"x8"	---	---	#AU
- SEF	8"x10"	---	---	#S
- SEF	13"x19.2"	---	---	#AU
- SEF	13"x18"	---	---	#AU
SRA3 SEF	320x450	---	---	#S
- SEF	12"x18"	---	---	AD
Custom size Mm Width	Min.	210.0 #AS		
	Max.	305.5 #AS		
Length	Min.	182.0 #AS		
	Max.	230.0 #AS		
Custom size Inch Width	Min.	#AS		
	Max.	#AS		
Length	Min.	#AS		
	Max.	#AS		

Remarks

SEF	Short Edge Feed

LFE	Long Edge Feed
A	Paper size to be set in Unit
S	Paper size to be set by SP mode
AD	Paper size to be detected automatically. Paper size can be selected by UP mode/ Select paper size from the list on OP panel.
#AD	Paper size to be detected automatically.
#S	Paper size setting is required by UP mode/ Select paper size from the list on OP panel.
SPS	Paper size setting is required by SP mode/ Select paper size from the list on OP panel
#AU	Paper size setting is required by UP mode/ Input actual paper size manually on OP panel
#AS	Paper size setting is required by SP mode/ Input actual paper size (mm only) manually on OP panel
---	Not supported

Option Specifications

A3/11"x17" Tray Unit TK5000 (B331)

Paper Size	A3 SEF, B4 SEF, 11"x17" SEF, $8_{1/2}$"x14" SEF, A4 SEF, A4 LEF, $8_{1/2}$"x11" SEF, 11"x $8_{1/2}$" LEF, 305 mm x 439 mm
Paper Weight	52 to 163 g/m^2
Tray Capacity	1,000 sheets
Remaining Paper Detection	5-Step: 100%, 75%, 50%, 25%, End

LCIT RT5030 (D452)

Operating Environment	Ranges of temperature and humidity: Same as main machine.	
Paper Feed System:	FRR-CF (no air-knife separation)	
Tray Capacity:	Tray 1, 2	1,000 sheets (Thickness: 0.11 mm)
	Tray 3	2,550 sheets (Thickness: 0.11 mm)
Paper Weight	Tray 1, 2	52 to 216 g/m^2
	Tray 3	52 to 163 g/m^2
Paper Size	Tray 1,2,3	A5 LEF, A5 SEF, 5½"x8½" LEF, B5 LEF, 5½"x8½" SEF, A4 LEF, 8½"x11" LEF
Paper Size Switching	Tray 1, 2	Fixed position side, end fences, adjusted for other paper sizes by the operator.
	Tray 3	Fixed position side, end fences, adjusted by service technician.
Heater (Option)	Anti-condensation heaters: 36W (18W x 2)	
Size (W x D x H)	540 x 730 x 980 mm (21.3 x 28.7 x 38.6 in.)	
Level	Less than 5 mm deviation at front/back, left/right	
Weight	Less than 88 kg (193.6 lb)	

Power Source	DC 24 V ±10%				
Power Consumption	Less than 132 W				
I/F Connection	Serial connection to main frame				
Tab Sheet:	Feed possible from Tray 3 or Tray 4. Requires installation of tab sheet fence.				
	Note: Only A4 LEF, 8½" x 11" LEF tab sheets can be fed.				
Paper Level Detection:	Trays 3, 4	5 Step: 900, 625, 375, 75, paper end			
	Tray 5	5 Step: 2250, 1525, 800, 75, paper end			
	Accuracy	±30 sheets (Tray 4, 5, 6)			
Bypass Tray (Option)	The Multi-Bypass Tray (B833) can be installed on either this LCIT or LCIT RT5050 (D532).				
Noise Level	Mode	Stand-alone	System		
			A	B	C
	Operation	< 73 dB	< 78 dB	< 80 dB	< 83 dB
	Standby		< 64 dB	< 70 dB	< 78 dB

LCIT RT5050 (13"x19.2" LCT D532)

Speed	555 mm/s
Paper Feed System:	FRR-CF (air-assisted separation)
Paper Capacity	2,000 sheets x 2 trays (80 g/m^2, 20 lb Bond)
Dimensions (W x D x H)	965 x 735 x 980 mm 1,017 x 730 x 980 mm (With extension tray)
Weight	Less than 190 Kg
Power source	DC 24 V ±10% (from Mainframe)
Power consumption	Less than 240 W
Noise (Power level)	Printing: Less than 78dB (Full system) Stand-by: Less than 65 dB (Full system)

Paper sizes	A5 (SEF)/HLT (SEF) – 13" x 19.2"
Paper weight	60 - 350 g/m^2 16 - 79 lb. Bond/ 140 lb. Index/ 100 lb. Cover
Tab Sheet:	Feed from Tray 3 or Tray 4. The installation of a tab sheet fence is required. Note: Only A4 LEF, $8_{1/2}$" x 11" LEF tab sheets can be fed.

Multi-Bypass Tray (B833)

The Bypass Tray is attached to the top of the A3/DLT LCT D355.

Speed	555 mm/s
Paper Feed System	FRR-CF
Tray Capacity	500 sheets (Paper thickness: 0.11 mm)
Paper Weight	60 to 216 g/m^2
Paper Sizes	A5 LEF, A5 SEF to A3 SEF, HLT LEF HLT SEF to 13"x19.2" SEF
Paper Size Switching	Operator adjustable side fences allow variety of paper sizes.
Paper Size Detection	Automatic (standard sizes only)
Anti-Condensation Heater	No
Remaining Paper Detection	4-Step: Including Near-End (Accuracy ±50)
Weight	Less than 18 kg (39.6 lb).
Power Source	24 Vdc (from Mainframe), 5 Vdc (from LCT)
Power Consumption	Less than 50 W
Dimensions (W x D x H)	710 x 560 x 210 mm (30 x 22 x 8.3 in.)
Tab Sheets	The installation of a tab sheet fence is required. Note: Only A4 LEF, $8_{1/2}$" x 11" LEF tab sheets can be fed.

Cover Interposer Tray CI5010 (B835)

Speed	439.9 mm/s
Paper Separation	FRR System with Feed Belt
Paper Sizes	Width: A5 SEF/$5_{1/2}$"x$8_{1/2}$" SEF to 13" Length: A5 LEF/$5_{1/2}$"x$8_{1/2}$" LEF to 19.2"
Paper Weight	64 to 216 g/m^2
Capacity	400 sheets (Paper thickness: 0.11 mm, 2 trays 200 sheets each)
Paper Size Detection	Automatic (standard sizes only)
Paper Size Switching	Operator adjustable side fences allow variety of paper sizes.
Side Registration	Yes
Power Supply	24 V ± 10% (from Mainframe)
Power Consumption	Less than 50 W
Dimensions (W x D x H)	Less than 540 x 730 x 1270 mm 21.2" x 28.7" x 50"
Weight	Less than 45 kg (99 lb)

Z-Folding Unit ZF4000 (B660)

Paper Sizes	No Folding (60-300 g/m^2): A3, A4, A5, B4, B5, B6 SEF, 11"x17", $8_{1/2}$"x14", $8_{1/2}$"x11" SEF, $5_{1/2}$"x$8_{1/2}$", 12"x18", 13"x19.2", 13"x18", SRA3
	Folding (64-80 g/m^2): A3, B4, A4 SEF, 11"x17", $8_{1/2}$"x14", $8_{1/2}$"x11" SEF, 12"x18"
Dimensions (W x D x H)	177 x 620 x 960 mm, 7 x 24.5 x 37.8 in.
Weight	Less than 55 kg (121 lb)
Power Consumption	100 W max.

Power Supply	North America	120 V, 60 Hz, 1 A
	Europe/Asia	220-240 V, 50/60 Hz, 0.5 A

Finisher SR5000 (3K Finisher B830)

Upper Tray	
Paper Capacity (80 g/m^2)	500 sheets (A4, 8$_{1/2}$" x 11" and smaller)
	250 sheets (B4, 8$_{1/2}$" x 14" and larger)
Paper Size	A3 to A6 SEF, 11"x17" to 5$_{1/2}$"x8$_{1/2}$", 12"x18", 13"x19"
Paper Weight	52 to 216 g/m^2
Upper Tray Full Detection	Provided
Shift Tray	
Paper Capacity (80 g/m^2)	3000 sheets (A4 LEF, B5 LEF, 8$_{1/2}$" x 11" LEF)
	1500 sheets (A3, A4 SEF, B4, B5 SEF, 11"x 17" SEF, 8$_{1/2}$"x14", 8$_{1/2}$"x11" SEF)
	1000 sheets (12" x 18", 13"x19")
	500 sheets (A5 LEF, 5$_{1/2}$" x 8$_{1/2}$" LEF)
	100 sheets (A5 SEF, 5$_{1/2}$" x 8$_{1/2}$" SEF)
Paper Sizes	A3 to A5, 11"x17" to 5$_{1/2}$"x8$_{1/2}$", 12"x18", 13"x19" (including tab paper)
Paper Weight	52 to 350 g/m^2
Shift Tray Full Detection	Provided
Stapler	
Stapling Stack Sizes	A4, B5, 8$_{1/2}$"x11" (Max. 100 Sheets) A3, B4, 11"x17", 8$_{1/2}$"x14" (Max. 50 sheets)
Stapling Paper Sizes	A3 to B5, 11"x17" to 8$_{1/2}$"x11"
	Z fold paper: A3 , B4 , 11"x17"

Stapling Paper Weight		64 to 80 g/m^2		
		Z fold paper: 64 to 80 g/m^2		
Staple Positions		4 Modes 1 Staple: Front, Rear, Rear-Oblique 2 Stapes: 2 locations		
Staple Capacity		5,000 staples/cartridge		
Staple Supply		Cartridge or Staple Replacement		
Stapled Stack Sizes	No Folding	Sheets	Sets	Sizes
		10 to 100	200 to 30	A4 SEF, B5 SEF, $8_{1/2}$"x11" SEF, A4 LEF, B5 LEF, $8_{1/2}$"x11" LEF
		2 to 9	150	
		10 to 50	150 to 30	A3, B4, 11"x17", $8_{1/2}$"x14"
		2 to 9	150	
	Folding	Sheets	Sets	Sizes
		1 to 10	30 to 3	A3 Z fold + A4, B4 Z fold + B5, 11"X17" Z-Fold + $8_{1/2}$"x11"
Trim Waste Staple Capacity		15,000 or more		
Waste Staple Hopper Full Detection		Provided		
Power Consumption		Less than 120 W		
Power Source		DC 24 V (From Mainframe)		
Size (W x D x H)		800 x 730 x 980 mm, 1.5 x 28.7 x 38.6 in.		
Weight		Less than 75 kg (165 lb)		

Punch Unit PU5000 (B831)

The punch unit is installed in the Finisher SR5000 (B830).

Punch Hole Positions	2/3-hole (North America)
	2/4-hole (Europe)
Punch Paper Size	
2-Hole (NA)	A6 to A3 SEF, 11"x17" to $5_{1/2}$"x$8_{1/2}$" SEF A5 to A4 LEF, $8_{1/2}$"x11" LEF, $5_{1/2}$"x$8_{1/2}$" LEF
3-Hole (NA)	A3 SEF, B4 SEF, 11"x17" SEF A4 LEF, B5 LEF, $8_{1/2}$"x11" LEF
4-Hole (EUR/A)	A3 SEF, B4 SEF, 11"x17" SEF A4 LEF, B5 LEF, $8_{1/2}$"x11" LEF
Paper Weight	
2-Hole (NA)	52 g/m^2 to 163 g/m^2
3-Hole (NA)	52 g/m^2 to 163 g/m^2
4-Hole (EUR/A)	52 g/m^2 to 128 g/m^2
Punch Waste Hopper Capacity	
2-Hole (NA)	10 K
3-Hole (NA)	10 K
4-Hole (EUR/A)	15 K
Operation Modes	All (Shift, Proof, Staple)

Booklet Finisher SR5020 (D434)

General

Operating Environment	Temperature and humidity ranges: Same as main machine.
Service Life	Expected: Five years or 60,000K
Size (w x h x d)	990 x 730 x 1130 mm (39 x 28.7 x 44.5 in.)
Weight	128 kg (281.6)

Power Supply	NA	AC 120V 60 Hz, 15A	
	EU	AC 220 to 240V, 50/60 Hz 10A	
Power Consumption	250 W		
Level	Less than 5 mm deviation at front/back, left/right		
Noise Level (dB A)	Mode	Alone	System
	Shift	< 76 dB	---
	Staple	< 78 dB	< 83 dB

Shift Tray

Capacity	Unfolded Paper	2500	A4 LEF, B5 LEF, LT LEF
		1500	A3, A4 SEF, B4, B5 SEF, LT, LG< LT SEF, SRA4, 226x310 mm
		1000	12x18", SRA3, 13x18", 12.6x1.5", 12.6x19.2", 13x19", 13x19.2", 310x432 mm
		500	A5 LEF, HLT LEF
		100	A5 SEF, HLT SEF
	Z-Folded Paper	30	
Paper Size	Unfolded Paper	A5 to 13x19.2"	
	Z-Folded Paper	A3, B4, A4 SEF, DLT, LG LT SEF, 12x18", 8-kai	
Paper Weight	Unfolded Paper	40 to 350 g/m^2	
	Z-Folded Paper	64 to 105 g/m^2	

Proof Tray

Capacity	Unfolded Paper	250	A4, LT or smaller
		50	B4, LG or larger
	Z-Folded Paper	20	A4, LT or smaller
		20	B4, LG or larger
Paper Size	Unfolded Paper	A6 SEF to 13x19.2", Postcard SEF	
	Z-Folded Paper	A3, B4, A4 SEF, DLT, LG, LT SEF, 12x18", 8-kai	
Paper Weight	Unfolded Paper	52 to 216 g/m^2	
	Z-Folded Paper	64 to 105 g/m^2	

Corner Stapling

Stack Size (80 g/m^2)	Unfolded Paper	2 to 100	A4, B5, LT
		2 to 50	A3, B4, DLT, LG
	Z-Folded Paper	10	
		Combined Stack	
		Z-Folded	**Unfolded**
		1	1 to 90
		2	0 to 80
		3	0 to 70
		4	0 to 60
		5	0 to 50
		6	0 to 40
		7	0 to 30
		8	0 to 20
		9	0 to 10
		10	0
Paper Size	Unfolded Paper	B5 to A3, LT to DLT	
	Z-Folded Paper	A3, B4, DLT	
Paper Weight	Unfolded Paper	64 to 90 g/m^2	
	Z-Folded Paper	64 to 105 g/m^2	
Stapling Positions	1 Staple: Rear, Rear diagonal, or Front 2 Staples: Front/Rear		
Staple Supply	Cartridge with 5000-staple capacity		
Tray Capacity After Stapling			

	Pages	Stacks	Size
No Folding	20 to 100	125 to 25	A4 LEF, B5 LEF, LT LEF
	10 to 19	200 to 105	
	2 to 9	150	
	10 to 100	150 to 15	A4 SEF, B5 SEF, LT SEF
	2 to 9	150	
	10 to 50	150 to 30	A3, B4, DLT, LG
	2 to 9	150	
No Folding, Mixed Sizes	**Pages**	**Stacks**	**Size**
	2 to 50	30	A3/A4 LEF B4/B5 LEF DLT/LT LEF
Z-Folded, Mixed with Unfolded	**Pages**	**Stacks**	**Size**
	1 to 10	30 to 3	A3 Z-fold/A4 B4 Z-fold/B5 DLT Z-fold/LT
Staple Trimming	Hopper Capacity		15,000 staples
	Hopper Full Alert		Photo-sensor
	Trimming Disposal		Alert, operator

Booklet Stapling

Stack Size	20	64 to 80 g/m^2
	15	80 to 90 g/m^2
Paper Size	13x19.2", 13x19", 12.6x19.2", 12.6x18.5", 13x18", SRA3 (320x450 mm), 12x18", A3, B4, SRA4 (320 x 225 mm), 226x310 mm, 310 x 432 mm, A4,B5, DLT, LG, LT	
Paper Weight	60 to 90 g/m^2	

Stapling Positions	2 staples, 2 fixed locations		
Staple Supply	2 cartridges, 5000 staples each		
Tray Capacity After Stapling	**Pages**	**Stacks**	**Size**
	2 to 5	30	All sizes
	6 to 10	15	
	11 to 15	10	
	16 to 20	5	

Punch Unit PU5020 (D449) (Option)

This punch unit is not pre-installed in the finisher. The punch unit must be installed.

Punching	North America	2/3 hole selectable	
	Europe	2/4 hole selectable	
	Scandinavia	4 hole	
Skew Correction	Yes		
Paper Registration	Yes		
Paper Size	**Holes**	**Edge**	**Size**
	2 Holes	SEF	A6 to A3, HLT to DLT
		LEF	A5 to A4, HLT to LT
	NA 2 Holes	SEF	A6 to A3, HLT to DLT
		LEF	A5 to A4, HLT to LT
	3 Holes	SEF	A3, B4, DLT
		LEF	A4, B5, LT
	EU 4 Holes	SEF	A3, B4, DLT
		LEF	A4, B5, LT
	Scn 4 Holes	SEF	B6 to A3, HLT to DLT
		LEF	A5 to A4, HLT to LT

	Holes	Weight
Paper Weight	2 Holes	52 to 209 g/m^2
	NA 2 Holes	
	3 Holes	
	EU 4 Holes	52 to 163 g/m^2
	Scn 4 Holes	

Trimmer Unit TR5020 (D455)

This option is installed on the left side of the Booklet Finisher (D434).

Compatible Machines	Booklet Finisher SR5020 (D434) with the D059/D060/D061
Operating Environment	Temperature and humidity ranges: Same as main machine.
Service Life	Expected: 5 years or 12,000 K
Paper Size	
Standard Sizes	13x19.2", 13x19", 12.6x19.2", 12.6x18.5", 13x19", SRA3 (320x450 mm), 12x18", A3, B4, SRA4 (320x225 mm), 226x310 mm, 310 x 432 mm, A4, B5, DLT, LG, LT, 8 kai
Custom Size	Width: 182 to 330 mm Length: 257 to 488 mm
Stack Size	1 to 20 sheets (folded)
Trimming	40 sheets (80 g/m^2)

	Pages	Sets
Tray Capacity	1 to 5	60 for all sizes
	6 to 10	35 for B5 and A4/LT 40 for B4/LG and A3/DLT
	11 to 15	25 for all sizes
	16 to 18	20 for B5, A4/LT and B4/LG 25 for A3/DLT
	19 to 20	20 for B5, A4/LT and B4/LG 25 for A3/DLT

Paper Weight	Weight: 80 g/m^2 Weight: 20 lb. Bond		
Power Supply	NA	AC 120V 60 Hz, 15A	
	EU	AC 220 to 240V, 50/60 Hz 10A	
Power Consumption	75W		
Size (w x d x h)	1115 x 590 x 555 mm (43.9 x 23.2 x 21.8 in.)		
Level	Less than 5 mm deviation at front/back, left/right		
Weight	70 kg or less		
Noise Level (dB A)	Mode	Alone	System
	Straight-Through	< 68 dB	< 75 dB
	Trimming	< 72 dB	< 75 dB

Ring Binder RB5000 (D392)

Configuration	Console
Paper Transport	Centered in paper path
Operation Modes	Punching + ring binding Punching only Straight-through (downstream delivery)

Signature Thickness	2 to 100 sheets		
Paper Size	Punching, binding	A4 LEF, LT LEF	
	Straight-through (no punching)		
	Unfolded	A6 to A3 SEF, DLT, HLT, 12"x18", 13"x19", 12.6"x19.2", 13"x19.2", Tab sheets (A4, LT, LG)	
	Z-Folded	A3, B4, A4 SEF, DLT, LG, LT SEF 12"x18" (from upstream Z-Folder unit).	
Paper Weight	64 to 216 g/m2		
Ring Sizes	2 (50-sheet, 100-sheet)		
Punching	A4 LEF: 23 holes LT LEF: 21 holes		
Ring Supply	Cartridge feed: capacity: 80 rings max.		
Output Tray Capacity	11 documents (100-ring bound, A4 SEF)		
	Thickness	Ring	On Tray
	2 to 10	50	25
	11 to 50	50, 100	20
	51 to 100	100	11
Punching Only	Up to 50 sheets		
Dimensions	870 x 730 x 980 mm (34.3 x 28.7 x 38.6 in.)		
Weight	140 kg (308 lb)		
Power Consumption	Less than 400 W		

Perfect Binder D391

Cover Interposer (Inserter) D391

Feed System	Automatic Paper Feed
Trays	Two. Tray A (upper), Tray B (lower)
Cover Setting	Face-up stacking
Feed	Top to bottom
Transport Mode	Simplex
Cover Paper Type	Standard PPC, Color Paper, Coated Paper
	Paper type mixing not recommended
Cover Size	Standard: A4 SEF, A4 LEF, B5 SEF, B5 LEF, LT SEF, LT LEF, EXE SEF
	Width: 257 to 330.2 mm
	Length: 182 to 487.7 mm
	Recommended: 13"x19.2", 13"x19", 13"x18", A3, B4
Tray A, B Capacity	Up to 200 covers (80 g/m^2)
	Maximum stack thickness: 24 mm
Paper Weight	64 g/m^2 to 300 g/m^2
Paper Positioning	Center aligned
Paper Size Detection	Width: Adjustable slide-fence contact sensors
	Tray A, Tray B: 1 sensor each
	Length: Pulse count photo-sensors
Size (w x d x h)	621 x 679 x 213 mm (24.5 x 26.7 x 8.4 in.)
Weight	Approximately 17 kg (37.4 lb)
Power Supply	DC 24V (supplied from host machine via Perfect Binder)
Power Consumption	Less than 103 W (maximum at operation)

Perfect Binder (D391)

Paper Positioning	Center aligned	
Delivery	Face-down	
Signature Thickness	10 to 200 sheets (64 to 80 g/m^2) 10 to 150 sheets (81 to 105 g/m^2) Max. thickness: Up to 23 mm (0.9 in.)	
Paper Size	Signature	Width: 182 to 228.6 mm Length: 257 to 320 mm
	Cover	Width: 257 to 330.2 mm Length: 364 to 487.7 mm

Paper Thickness	Signature	64 to 105 g/m2 * * 106 to 163 g/m2 paper is available for slip sheets, however, limited to 10 sheets.
	Cover	90 to 300 g/m^2
Finished Size	Width	139.7 mm to 216 mm
	Length	201 to 297 mm
Trimming Range	Top	6 to 28 mm
	Bottom	6 to 28 mm
	Fore Edge	6 to 40 mm

	Target	Signature	Cover
Recommended Cover/Signature Size Ratios	A4	SRA4	13"x19.2" 13"x19" 13"x18" SRA3
	B5	A4	A3
	A5	B5	B4
	LT	9"x12"	13"x19.2" 13"x19"
Trimming Modes	3 cuts: Bottom, top, fore edge 1 cut: Fore edge (Limit: 297 mm) No cuts		
Downstream Delivery	Straight-through, no binding		
	Size	Width: 98.4 to 330.2 mm Length: 139.7 to 500 mm	
	Paper Weight	52 to 300 g/m^2	
Book Output Tray	Max.: 25 mm (80g/m^2) Book door locked during operation		
Warm-up Time	Less than 380 sec. (6.3 min.)		
Glue Capacity	Glue vat 380 g (continuous pellet supply) Approximately A4 to B5 100 books		
Trimmings Box Capacity	More than 15 books Approx. A4 to B5 of 100 sheets each, 80 g/m^2		
Size (w x d x h)	1090 x 791 x 1387 mm (43 x 31 x 53.5 in.)		
Weight	335 kg (737 lb)		
Power Supply	EU: 220 to 240V 50/60 Hz NA: 208 60 Hz		
Power Consumption	Less than 623 W (with inserter)		

High Capacity Stacker SK5010 (D447)

The Tray Cart (D456) is available as an additional option for this unit.

General

Operating Environment	Temperature and humidity ranges: Same as main machine.		
Service Life	Expected: 5 years or 60,000 K		
Speed	280 to 700 mm/s		
Front Door Lock	Hasps provided, lock not provided		
Size (w x h x d)	900 x 980 x 730 mm (35.4" x 38.6" x 28.7")		
Weight	120 kg (264.6 lb.)		
Power Supply	NA	AC 120V 60 Hz, 15A	
	EU	AC 220 to 240V, 50/60 Hz 10A	
Power Consumption	120 W		
Level	Less than 5 mm deviation at front/back, left/right		
Noise Level (dB A)	Mode	Alone	System
	Shift	< 76 dB	< 83 dB

Shift Tray

Capacity (80 g/m^2)	5,000	A3 Ext., A3 SEF, B4 SEF, A4 SEF, A4 LEF, DLT SEF, LG SEF, LT SEF, LT LEF
	2,500	B5 SEF, B5 LEF, A5 SEF, A5 LEF, HLT SEF, HLT LEF
Paper Weight	40 to 300 g/m^2	
Tray Full Detection	4-Steps: 25%, 50%, 75%, 100%	

Proof Tray

Capacity	250 (A4, LT 80 g/m^2)

Paper Size	A5 SEF/Postcard to 331 x 499 mm (13" x 19.2")
Paper Weight	40 to 300 g/m^2
Tray Full Detection	None

Buffer Pass Unit (M379)

Dimensions (W x H x D)	330 x 920 x 730 mm, 13.0" x 36.2" x 28.7"
Weight	Less than 92 kg, 202.9 lb.
Power consumption	Less than 200 W
Power source	NA: 100 to 120 V, 50/60 Hz, 3 A EU: 220 to 240 V, 50/60 Hz, 1 A
Paper Size	331 x 488 mm to A5 13" x 19.2" to $5_{1/2}$ x $8_{1/2}$
Paper Weight	52 to 350 g/m^2, 14 to 80 lb.

2. Appendix: Preventive Maintenance

PM Tables

Main Machine

Symbol Key for PM Tables

I	Inspect. Clean, replace, or lubricate as needed.
C	Cleaning required.
R	Replacement required.
AN	As needed
L	Lubrication required: • Silicone Grease 501 (52039502) • Grease Barrierta – S552R (A2579300) • Grease – KS660 – SHIN-ETSU • Heat Resisting Grease MT-78 • Launa Oil 40

Mainframe PM Parts

ADF (D095 only)

	80K	120K	140K	Note
Transport belt			R	Clean with a damp cloth, or alcohol
Feed belt		R		
Separation roller		R		
Pick-up roller		R		
Sensors	I	I		Blower brush
Drive gears	I	I		Lubricate with a very small amount of G501.

Scanner Unit (D095 only)

	400K	800K	1000K	3000K	Note
1st to 3rd mirrors	C				Optics cloth
Dust Filter	I/C				Blower brush
Wire Adjustment				I	
Exposure Glass			R		

PCDU

	400K	800K	1200K	1600K	2400K	Note
Drum Unit: K					R	
Drum Unit: CMY					R	
Charge Corona Units	R					
Drum Cleaning Brush Roller		R				
Drum Cleaning Blade	R					
Drum Lubricant Brush Roller	R					
Drum Lubricant Blade	R					
Drum Lubricant Bar	R					
Drum Cleaning Gear Unit				R		
Developer			R			
Development Unit	I/C					
Dust Shield Glass	C					Blower brush
Erase Lamp Shield Glass	C					Blower brush
Drum Potential Sensor	C					Blower brush

Transfer Units

	400K	800K	1200K	1600K	Note
ITB Unit					
ITB (Image Transfer Belt)				R	
Image Transfer Rollers			R		
ITB Bias Roller			R		
All Other Rollers in the ITB Unit	I			C	Wipe with a dry cloth
ID and MUSIC Sensors		C			Wipe with a damp cloth (alcohol)
ITB Cleaning Brush Roller		R			These items are always replaced as a set.
ITB Cleaning Blade	R				
ITB Lubricant Bar	R				
ITB Lubricant Brush Roller	R				
ITB lubricant blade	R				
ITB Fan	C				Blower brush or dry cloth
PTR (Paper Transfer Roller) Unit					
Paper Transfer Roller	R				
PTR Cleaning Brush Roller		R			
PTR Cleaning Blade	R				
PTR Lubrication Bar	R				
PTR Lubrication Brush Roller	R				
PTR Discharge Plate	R				
PTR Entrance Mylar	C				Alcohol

Toner Hopper

	400K	800K	2800K	Note
Toner Hopper Unit	C			Blower brush or dry cloth
Toner Bottle Motor Gears			L	Grease Barrierta - S552R

Sub-Hopper Unit

	400 K	3200K	Note
Sub-hopper Unit Gear		L	Grease Barrierta
Toner Supply Tube	C		Vacuum (☛ "Remaining Toner Detection Error" in the Troubleshooting section of the Main Chapters)

Fusing Unit

	400K	800K	1600K	2400K	Note
Fusing Belt	R				☛ *1
Hot Roller		R			
Pressure Roller		R			
Pressure Roller Stripper Pawl Unit		C			Dry cloth
Fusing Belt Stripper Plate	C				Dry cloth
Cleaning Web	R				
Heating Roller Thermistors	I		R		
Heating Roller Thermopile		C			Blower brush
Pressure Roller Thermopile		C			Blower brush
Fusing Entrance Guide	I				
Fusing Belt Tension Roller Bushings		R			

Note

- *1: Clean the heating roller and hot roller with alcohol when replacing the fusing belt.

Paper Feed: Mainframe

	400K	800K	1200K	Note
Registration Rollers	C			Damp cloth
All Rollers in Registration Unit	C			Damp cloth
Registration Feed Guide Plate	I			Damp cloth
Registration Sensor	C			Blower brush
Registration Unit Entrance Sensor	C			Blower brush
Paper Transfer Sensor	C			Blower brush
Double Feed Sensors	C			Blower brush
CIS	C			Blower brush
Paper Dust Tray	C			Dry cloth.

Paper Feed: Trays

	300K	400K	800K	Note
Pick-up Rollers (Tray 1 to Tray 2)				Service Life: 1000K Replace if jams and/or double-feeds occur with increasing frequency.
Paper Feed Rollers (Tray 1 to Tray 2)				
Separation Rollers (Tray 1 to Tray 2)				
Paper Feed Sensor		C		Blower brush
Vertical Feed Sensors		C		Blower brush
Paper Feed Roller (Tray 3 and 4)	R			Damp cloth
Pick-up Roller (Tray 3 and 4)	R			Damp cloth

	300K	400K	800K	Note
Separation Roller (Tray 3 and 4)	R			Damp cloth
Transport Guide Plate (Tray 3 and 4)	Inspect and clean every 500K. (Damp cloth)			
Grip Roller (Tray 3 and 4)	Inspect and clean every 500K. (Damp cloth)			

Duplex Unit

	400K	800K	1200K	Note
Duplex Transport Rollers	C			Damp cloth
Duplex Transport Sensors	C			Blower brush

Paper Exit

	400K	800K	1200K	Note
Heat Pipe Roller	C			Alcohol, dry cloth
Exit Anti-Static Brushes	C			Blower brush
Paper Exit Rollers (Upper, Lower)	C			Alcohol, dry cloth
Paper Exit Sensor	C			Blower brush
Transport Rollers	C			Blower brush
Paper Transport Belt	C			Damp cloth

Other

	220K	400K	1200K	Note
Dust Filters		R		
Development Filters		C		Vacuum
PSU Filter		C		Vacuum
Controller Filter		C		Vacuum

	220K	400K	1200K	Note
Fiery Controller Filter		C		Vacuum
Ozone Filters			R	
Waste Toner Bottle	I, R			Empty and clean every inspection

LCIT RT5050 (D532)

	300K	1000K	Expected	Note
Paper Feed Roller	R			Damp cloth
Pick-up Roller	R			Damp cloth
Separation Roller	R			Damp cloth
Transport Guide Plate	Inspect and clean every 500K. (Damp cloth)			
Grip Roller	Inspect and clean every 500K. (Damp cloth)			

LCIT RT5030 (D452)

The PM interval is for the number of sheets that have been fed.

Part	500K	1000K	Note
Transport guide plate	IC		Clean with damp, clean cloth
Grip rollers (drive, idle rollers)	IC		
Paper feed rollers x3	IC	R	
Pick-up rollers x3	IC	R	
Separation rollers x3	IC	R	
CIS	IC	IC	

Part	1000K	3000K	5000K	Notes
Pickup Solenoids		IR		3rd, 4th, 5th Tray

Part	1000K	3000K	5000K	Notes
Separation Solenoids		IR		3rd, 4th, 5th Tray
Lift Motors	IR			3rd, 4th, 5th Tray
Lift Motor			IR	5th Tray

Bridge Unit (D379)

	500K	1000K	Expected	Note
Transport Guide Plate	Inspect and clean every 500K. (Damp cloth)			
Grip Roller	Inspect and clean every 500K. (Damp cloth)			

Multi-Bypass Tray (B833)

	500K	1000K	Expected	Note
Paper Feed Roller		R		
Pick-up Roller		R		
Separation Roller		R		
Transport Guide Plate	Inspect and clean every 500K.			
Grip Roller	Inspect and clean every 500K.			

Cover Interposer Tray (B835)

The PM interval is for the number of sheets that have been fed.

	60 K	As Needed	Note
Drive Rollers		C	Dry cloth
Idle Rollers		C	Dry cloth
Feed Belt	R		
Separation Roller	R		

	60 K	As Needed	Note
Pick-up Roller	R		
Sensors		C	Blower brush.
Drive Gears		I	Lubricate with a very small amount of G501.

Z-Folding Unit (B660)

	As Needed	Note
Drive Rollers	C	Dry cloth.
Idle Rollers	C	Dry cloth.
Anti-Static Brush	C	Dry cloth.
Bushings	L	Silicone Oil
Sensors	C	Dry cloth.

3000-Sheet Finisher (B830)

	350K	700K	1050K	Note
FINISHER				
Driver rollers	I	I	I	Alcohol
Idle rollers	I	I	I	Alcohol
Discharge brush	I	I	I	Alcohol
Shaft Bearings	I	I	I	Lubricate with silicone oil if noisy.
Sensors	I	I	I	Blower brush.
Jogger fences	I	I	I	Make sure that the screws are tight.
Staple waste hopper	C	C	C	Empty staple waste.

Punch (B831)

	300K	450K	600K	EM	Note
Punch Waste Hopper	I	I	I		Remove and empty

Booklet Finisher SR5020 (D434)

Main

Part	5000K	25000K	
Rollers (drive, idle)	IC		Alcohol, clean cloth
Discharge brush	IC		
Shafts	IC		Lubricate with silicone oil if noisy
Sensors	IC		Blower brush
Jogger fences	IC		Tighten screws
Staple trimmings hopper	IC		Empty hopper
Alignment brush roller		IR	See below
Positioning roller		IR	
Drag roller (sponge)*1		IR	

1. At 25000K, display the PM Counts for the alignment brush roller, positioning roller, and drag sponge roller.
2. Replace if "Target" has been exceeded.

Punch Unit

Part	20000K	
Punch unit	IC	• Display PM Count for punch unit. • Replace if "Target" has been exceeded.

Staplers

Part	50000K	200000K	
Corner stapler	IR		• Display PM Count. • Replace if "Target" exceeded.
Booklet Staplers (x2)		IR	

Trimmer Unit TR5020 (D455)

Part	PM Visit	
Rollers (drive, idle rollers)	IC	Water, clean cloth
Belts	IC	
Discharge brush	IC	Cloth, blower brush
Roller shafts		Lubricate with silicone oil if noisy
Sensors	IC	Blower brush
Paper trimmings hopper	IC	Empty, make sure the operator knows how to empty the hopper
Trimming Blade	R	Replace the blade after 400K. SP7989 (Trim Count) displays the total count.

Ring Binder (D392)

Periodically inspect and clean the parts listed in the table below.

Item		Action
Horizontal Transport Path		
	Anti-static brushes	Blower brush
	Horizontal transport path sensors	Blower brush
	Drive rollers, idle rollers	Damp cloth
Switchback Unit		
	Anti-static brushes	Blower brush

Item		Action
	Switchback area sensors	Blower brush
	Drive rollers, idle rollers	Damp cloth
Binder Unit		
	Paddle roller	Blower brush
	Transport path sensors	Blower brush
	Drive rollers, idle rollers	Damp cloth

High Capacity Stacker SK5010 (D447)

Part	500K	PM Visit	
Rollers (drive, idle rollers)	IC	IC	Alcohol, clean cloth
Anti-static brush	IC	IC	
Shafts	IC	IC	Lubricate with silicone oil if noisy.
Sensors	IC	IC	Blower brush
Sub jogger fences	IC	IC	Alcohol, clean cloth
Main jogger fences	IC	IC	
LE stopper	IC	IC	

Perfect Binder/Inserter (D391)

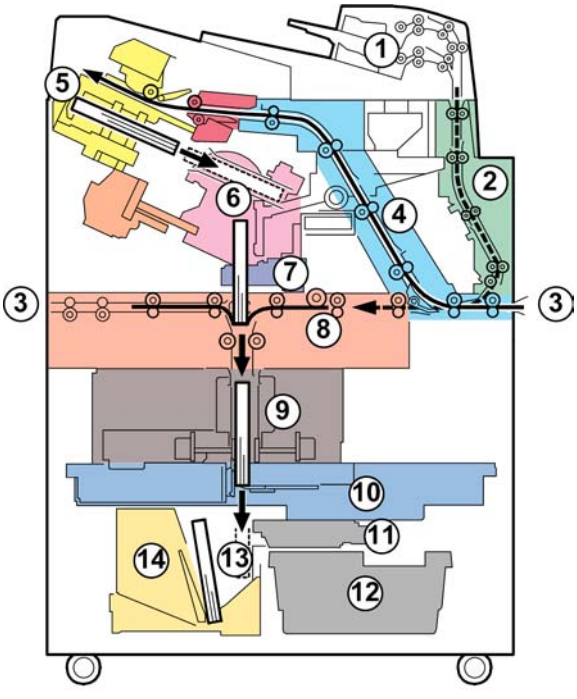

d391p100

No.	Area
1	Inserter Unit
2	Vertical Path (Covers from Inserter)
3	Horizontal Paper Path
4	Signature Path
5	Stacking Tray
6	Main Grip Unit
7	Gluing Unit
8	Cover Registration Unit
9	Signature Rotation Unit
10	Trimming Unit
11	Trimming Buffer Unit

12	Trimmings Box
13	Book Buffer
14	Book Output

- To reset the PM counters for the Perfect Binder (D391), use the Dip SW on the main board of the perfect binder. For detail, refer to "Resetting Counter" in the main service manual for the Perfect Binder (D391).
- The following parts are not displayed in the PM counters (SP7621). "PM part replacement message" is displayed on the LCD if the following parts reach their PM part life.

  Blade, Trimmings catcher unit, Blade Cradle, Glue Vat unit

Inserter Unit

Part	Clean	PM	Comments
Feed Roller	40 K sheets	100 K sheets	Spurious noise, feed jams
Magnetic Clutch	1,000 K sheets	1,000 K sheets	Cover skews, jams
Pickup Roller	40 K sheets	100 K sheets	Feed slippage, feed jams
Separation Roller	40 K sheets	100 K sheets	Spurious noise, double feeds
Separation Roller Torque Limiter		1,000 K sheets	Spurious noise, double feeds
Cover Unit Drive Roller 1	EM	Skew Predicted: 30,000 K Sheets	
Cover Unit Drive Roller 2	EM	Skew Predicted: 30,000 K Sheets	

Horizontal Paper Path

Part	Interval			Comments
	EM	Predicted	Clean	
Anti-Static Brush: Horizontal Path: Small	EM	2,000 K sheets		Cover, signature misaligned due to large amount of static charge on cover

Part	Interval			Comments
	EM	Predicted	Clean	
Drawer Harness (Female Connector)	EM	20 K books		Book detected in tray, book stacking tray error
Drawer Harness (Male Connector)	EM	20 K books		Book detected in tray, book stacking tray error
Entrance Roller	EM	30,000 K sheets	1,000 K sheets	Jam, skew due to deterioration in feed capability
Horizontal Exit Roller 1	EM	30,000 K sheets	1,000 K sheets	Jam, skew due to deterioration in feed capability
Horizontal Exit Roller 2	EM	30,000 K sheets	1,000 K sheets	Jam, skew due to deterioration in feed capability
Horizontal Transport Roller 1	EM	30,000 K sheets	1,000 K sheets	Jam, skew due to deterioration in feed capability
Horizontal Transport Roller 2	EM	30,000 K sheets	1,000 K sheets	Jam, skew due to deterioration in feed capability
Horizontal Transport Roller 3	EM	30,000 K sheets	1,000 K sheets	Jam, skew due to deterioration in feed capability
Horizontal Transport Roller 4	EM	30,000 K sheets	1,000 K sheets	Jam, skew due to deterioration in feed capability
Horizontal Transport Roller 5	EM	30,000 K sheets	1,000 K sheets	Jam, skew due to deterioration in feed capability
Relay Reflective Sensor Mirrors: Large	Clean	200 K sheets	200 K sheets	Jams, sensor adjustment error (if not cleaned)
Ripple Rollers	EM	1,000 K sheets	1,000 K sheets	Pressure on paper becomes loose, paper cannot exit

Signature Path

Part	Interval	Predicted	Comments
Anti-Static Brush 1: Signature Path	EM	2,000 K sheets	Due to large amount of discharge, excessive amount of spill around trimmer unit. Poor stacking in stacking tray.
Anti-Static Brush 2: Signature Path	EM	2,000 K sheets	Due to large amount of discharge, excessive amount of spill around trimmer unit. Poor stacking in stacking tray.

Stacking Tray

Part	Interval	Predicted	Clean	Comments
Switchback Roller	EM	1,000 K sheets		Trailing edge of paper does not return (Trailing edge does not align correctly in stacking tray)
TE Press Roller: Large	EM	1,000 K sheets		Stack edge does not align correctly
TE Press Roller: Small	EM	1,000 K sheets		Stack edge does not align correctly
Jogger Motors	EM	15,000 K sheets		Jogger motor error, signature stack does not align correctly
Anti-Static Brush: Stacking Tray	EM	2,000 K sheets		Due to large amount of discharge, excessive amount of spill around trimmer unit Poor stacking
Rollers: Stacking Tray	Clean		1,000 K sheets	Jam, skew due to deterioration in feed capability

Main Grip Unit

Part	Interval	Predicted	Replace	Comments
Main Grip Motors	EM	100 K signatures		Main grip motor error, PCB damaged (blown fuse)

Part	Interval	Predicted	Replace	Comments
Signature Thickness Sensor	EM		50 K signatures	Signature thickness sensor error. Use the Service Board DIP switches to adjust the signature thickness for 25 mm.

Gluing Unit

Part	PM	Comments
Glue Vat Unit	2,000 hours	Heater error, warm-up time not within specification

Cover Registration Unit

Part	Interval	Predicted	
Buffer Roller	EM	1,000 K sheets	Poor paper return, causes jams, skewing
Anti-Static Brush: Cover Registration: Horizontal Path	EM	2,000 K sheets	Increase in amount of trimmings spillover, trimming unit

Signature Rotation Unit

Part	Interval	Predicted	Replace	
Ball Screw Unit	EM	20 K times		Ball screw cannot apply pressure
Torque Diode (Signature Rotation Unit for Trimming)	EM		50 K signatures	Inaccurate cutting

Trimming Unit

Part	Interval		Comments
Blade	PM	40 K cuts	Set the machine in Replacement Mode for replacement.
Blade Cradle	PM	5.5 K cuts	

Part	Interval		Comments
Signature Exit Sensors (E/R)	Clean	100 K signatures	Jams, sensor adjustment error (if not cleaned)
Trimmings Buffer Motor	EM	50 K signatures	
Trimmings Catcher	PM	40 K cuts	Set the machine in Replacement Mode for replacement.

Other

Part	Interval	Predicted	
Deodorization Filters	EM	1,000 K sheets	Glue odor noticeable
Deodorization Filters (Gluing Unit)	EM	1,000 K sheets	Glue odor noticeable

3. Appendix: Service Call Conditions

Service Call Conditions

Service Call Table

There are 4 levels of service call conditions.

Level	Definition	Reset Procedure
A	Critical SCs are displayed on the operation panel. The machine is disabled, and operator cannot reset the SC.	Enter SP mode and do SP5810 to release the machine for servicing.
B	SCs that disable only the features that use the defective item. These SCs are not shown to the operator under normal conditions. They are displayed on the operation panel only when the defective feature is selected.	Turn the main power switch off and on. ☛ "Correct Procedure to Turn Off the Power" under the Installation Requirement in the Field Service Manual.
C	SCs that are not shown on the operation panel. They are internally logged.	Logging only
D	Turning the operation switch (or main power switch) off then on resets these SCs. These SCs are displayed on the operation panel and displayed again if the error reoccurs.	Turn the operation switch (or main power switch) off and on. ☛ "Correct Procedure to Turn Off the Power" under the Installation Requirement in the Field Service Manual.

SC Code Descriptions

Before You Begin...

- If a problem concerns a circuit board, disconnect and reconnect the connectors and then test the machine. Often a loose or disconnected harness is the cause of the problem. Always do this before you decide to replace the PCB.
- If a motor lock error occurs, check the mechanical load before you decide to replace the motor or sensors.

- When a Level "A" or "B" SC occurs while in an SP mode, the machine cannot display the SC number. If this occurs, check the SC number after leaving the SP mode.
- The machine reboots automatically when the machine issues a Level "D" SC code. This is done for Level "D" SC codes only.

⚠CAUTION

- Never turn off the main power switch when the power LED is lit or flashing. To avoid damaging the hard disk or memory, press the operation switch to switch the power off, wait for the power LED to go off, and then switch the main power switch off.
- ☛ "Correct Procedure to Turn Off the Power" under the Installation Requirement in the Field Service Manual.

The main power LED lights or flashes while the main machine is communicating with the network server, or while the machine is accessing the hard disk or memory for reading or writing data.

Service Call Tables - 1

SC Codes Group 1: Scanning

No.	Type	Details (Symptom, Possible Cause, Troubleshooting Procedures)	
101	B	Exposure Lamp Error **(D095 only)**	
		The standard white level was not detected properly when scanning the white plate.	• Exposure lamp defective • Lamp stabilizer defective • Exposure lamp connector defective • Scanner motor control unit (MCU board) defective • SBU board defective • Dirty standard white plate • Dirty scanner mirror or scanner mirror or lens block out of position

No.	Type	Details (Symptom, Possible Cause, Troubleshooting Procedures)	
120	B	Scanner Home Position Error 1 **(D095 only)**	
		The scanner home position sensor does not detect the OFF condition during initialization or copying	• Scanner home position sensor defective • Poor connection between HP sensor and MCU board • Scanner motor control unit (MCU board) defective • Scanner wire, timing belt, pulleys, or carriage out of position • Scanner motor defective • Poor connection or defective harness between MCU board and scanner motor

No.	Type	Details (Symptom, Possible Cause, Troubleshooting Procedures)	
121	B	Scanner Home Position Error 2 **(D095 only)**	
		Scanner home position sensor does not detect ON.	• Scanner home position sensor defective • Poor connection between MCU board and scanner home position sensor • Harness between MCU board and sensor defective • MCU board defective • Scanner wire, timing belt, pulleys, or carriage out of position • Scanner drive motor defective • Harness between MCU board and scanner motor disconnected

No.	Type	Details (Symptom, Possible Cause, Troubleshooting Procedures)	
124	B	Encoder Signal Error **(D095 only)**	
		The scanner motor encoder connector is not set correctly, or the encoder signal was not input.	• Scanner motor encoder connector disconnected • Scanner motor lead connector disconnected • Scanner motor defective • MCU board defective (scanner motor control unit) • Scanner wire, timing belt, pulleys, or carriage installation incorrect • Power supply connector disconnected (+38V ±24V) • Power supply unit (PSU-E board) defective

No.	Type	Details (Symptom, Possible Cause, Troubleshooting Procedures)	
125	B	Scanner Motor Error 1 **(D095 only)**	
		Scanner motor stopped before feedback from scanner HP sensor detected, or motor speed too slow when detected at scanner HP sensor.	• Scanner motor defective (high torque) • Overload on scanner drive mechanism • MCU board defective (scanner motor unit control)

No.	Type	Details (Symptom, Possible Cause, Troubleshooting Procedures)	
126	B	Scanner Motor Error 2 **(D095 only)**	
		The scanner motor does not stop within 15 mm after the scanner home position sensor turns on when the scanner returns.	• Scanner motor defective (low torque) • Overload on scanner drive mechanism • MCU board defective (scanner motor control unit)

No.	Type	Details (Symptom, Possible Cause, Troubleshooting Procedures)	
127	B	Scanner Motor Error 3 **(D095 only)**	
		The scanner motor rotates in the opposite direction to the signal from the MCU board.	• Scanner motor defective (motor lead connected incorrectly) • MCU board defective (scanner motor control unit)

No.	Type	Details (Symptom, Possible Cause, Troubleshooting Procedures)	
128	C	Scanner Motor Error 4 **(D095 only)**	
		The scanner motor speed does not reach the target speed by the time the scanning start point is reached.	• Scanner motor defective • Overload on scanner mechanism • PSU-Eb board defective • MCU board defective (scanner motor control unit)

No.	Type	Details (Symptom, Possible Cause, Troubleshooting Procedures)	
129	C	Scanner Motor Error 5 **(D095 only)**	
		The scanner motor speed is abnormal. The machine will not stop scanning even after the machine detects that motor speed is abnormal.	• Scanner motor defective • Scanner drive mechanism defective • PSU-Eb board defective • MCU board defective (scanner motor control unit)

No.	Type	Details (Symptom, Possible Cause, Troubleshooting Procedures)	
141	B	Black level detection error **(D095 only)**	
		When the scanner was turned on, AGC (automatic gain control) failed to achieve the target value of 10 ±3.	• SBU to IPU harnesses defective • BCU to IPU harnesses defective • SBU defective • IPU defective • BCU defective

No.	Type	Details (Symptom, Possible Cause, Troubleshooting Procedures)	
142	B	White level detection error **(D095 only)**	
		When the scanner was turned on, the second sampling by AGC (automatic gain control) failed to achieve a value within the range –7 to 0 of the target value 128.	• Standard white plate defective, dirty • Moisture inside the scanner unit • SBU to IPU harnesses defective • BCU to IPU harnesses defective • SBU defective • IPU defective • BCU defective

No.	Type	Details (Symptom, Possible Cause, Troubleshooting Procedures)	
143	C	SBU Error 1 **(D095 only)**	
		When the scanner was turned on, the SBU (Sensor Board Unit) level adjustment, black level check, and final SBU white level check failed.	• SBU defective • IPU defective • BCU defective • Harness between the SBU and IPU defective • Harness between the BCU-IPU defective • Standard white plate not installed correctly, or is dirty • Scanner mirrors and/or lenses are dirty or installed incorrectly

No.	Type	Details (Symptom, Possible Cause, Troubleshooting Procedures)	
144	B	SBU Error 2 **(D095 only)**	
		At power on: The SYDI terminal signal did not go HIGH within 1 s The specified SBU (Sensor Board Unit) ID (GASBUP and LM98513) could not be read after 3 tries	• SBU defective • BCU defective • Harness between SBU and IPU defective

No.	Type	Details (Symptom, Possible Cause, Troubleshooting Procedures)	
161	B	IPU Error	
		At power on, or when the machine returns from an energy save mode, the self-diagnostic program returned an IPU error.	• IPU defective • Connection between SBU and IPU is loose, broken, or defective

No.	Type	Details (Symptom, Possible Cause, Troubleshooting Procedures)	
180	B	Scanner Unit Fan Error: Scanner Intake Fan **(D095 only)**	
		The MCU issued a lock signal fro the scanner intake fan (rear, right).	• Fan, MCU, SIB harnesses loose or defective • Scanner intake fan motor defective • MCU defective • SIB defective

No.	Type	Details (Symptom, Possible Cause, Troubleshooting Procedures)	
181	B	Scanner Unit Fan Error: Lamp Regulator Fan (Right) **(D095 only)**	
		The MCU issued a lock signal for the lamp regulator fan (front, right).	• Fan, MCU harness loose, defective • Lamp regulator (right) fan motor defective • MCU defective • SIB defective

No.	Type	Details (Symptom, Possible Cause, Troubleshooting Procedures)	
182	B	Scanner Unit Fan Error: SBU Cooling Fan **(D095 only)**	
		The MCU issued a motor lock signal for the SBU cooling fan in the scanner unit	• Scanner unit harness loose, defective • Fan, MCU harness loose, defective • SBU Fan motor defective • MCU defective • SIB defective

No.	Type	Details (Symptom, Possible Cause, Troubleshooting Procedures)	
183	B	Scanner Unit Fan Error: Lamp Regulator Fan (Left) **(D095 only)**	
		The MCU issued a lock signal for the lamp regulator fan (front, left).	• Scanner unit harness loose, defective • Fan, MCU harness loose, defective • Lamp regulator (left) fan motor defective • MCU defective • SIB defective

No.	Type	Details (Symptom, Possible Cause, Troubleshooting Procedures)	
185	B	Exposure Lamp 1 Lamp Regulator (Right) Error **(D095 only)**	
		The MCU detected a defect in the lamp regulator (right) when the 1st exposure lamp lit. .	• 1st exposure lamp defective • 1st lamp FFC (flat film cable) loose or defective • MCU to lamp regulator (left) harness defective • Lamp regulator (left) is defective • MCU defective • SIB defective

No.	Type	Details (Symptom, Possible Cause, Troubleshooting Procedures)	
186	B	Exposure Lamp 2 Lamp Regulator (Left) Error **(D095 only)**	
		The MCU detected a defect in the lamp regulator (left) when the 2nd exposure lamp lit. .	• 2nd exposure lamp defective • 2nd lamp FFC (flat film cable) loose or defective • MCU to lamp regulator (left) harness defective • Lamp regulator (left) is defective • MCU defective • SIB defective

No.	Type	Details (Symptom, Possible Cause, Troubleshooting Procedures)	
187	B	Scanner Unit Fan Error: Scanner Unit Exhaust Fan **(D095 only)**	
		The MCU issued a lock signal for the the scanner unit exhaust fan (rear, left).	• Scanner unit harness loose, defective • Fan, MCU harness loose, defective • Scanner unit exhaust fan motor defective • MCU defective • SIB defective

No.	Type	Details (Symptom, Possible Cause, Troubleshooting Procedures)	
188	B	Scanner Unit Fan Error: Scanner Motor Cooling Fan **(D095 only)**	
		The MCU issued a lock signal for the scanner motor cooling fan.	• Scanner unit harness loose, defective • Fan, MCU harness loose, defective • Scanner unit exhaust fan motor defective • MCU defective • SIB defective

No.	Type	Details (Symptom, Possible Cause, Troubleshooting Procedures)
195	D	Serial Number Error
		The serial number in the NVRAM does not match the one in the BCU.
		• Incorrect serial number • Incorrect firmware installed
		Check if the engine firmware in the machine is correct. Input the correct serial number. For details about inputting a serial number, consult your supervisor.

Service Call Tables - 2

SC Codes Group 2: Exposure

No.	Type	Details (Symptom, Possible Cause, Troubleshooting Procedures)
202	D	Polygon motor error 1: Laser Unit YM
		The polygon mirror motor of LD unit YM does not reach the targeted operating speed within the prescribed time.
		• Harness to the IPU disconnected • Harness inside the laser unit YM disconnected • Polygon motor drive board defective • IPU defective
		1. Check the harness connection to the IPU. 2. Check the harness connection inside the laser unit YM. 3. Replace the polygon motor drive board. 4. Replace the IPU.

No.	Type	Details (Symptom, Possible Cause, Troubleshooting Procedures)
204	D	Polygon motor error 3: Laser Unit YM
		The polygon motor stops operating while the LD units of the laser unit CK are firing.
		• Same as SC202
		Same as SC202

No.	Type	Details (Symptom, Possible Cause, Troubleshooting Procedures)
206	D	Polygon motor error 1: Laser Unit CK
		The polygon mirror motor of LD unit YM does not reach the targeted operating speed within the prescribed time.
		• Harness to the IPU disconnected • Harness inside the laser unit CK disconnected • Polygon motor drive board defective • IPU defective
		1. Check the harness connection to the IPU. 2. Check the harness connection inside the laser unit CK. 3. Replace the polygon motor drive board. 4. Replace the IPU.

No.	Type	Details (Symptom, Possible Cause, Troubleshooting Procedures)
208	D	Polygon motor error 3: Laser Unit CK
		The polygon motor stops operating while the LD units of the laser unit CK are firing.
		• See SC206 for possible cause.
		See SC206 for troubleshooting details.

No.	Type	Details (Symptom, Possible Cause, Troubleshooting Procedures)
230	D	FGATE ON error: Bk
		The PFGATE ON signal does not assert within 20 ms after processing the image in normal job or MUSIC for start position K.
		• Poor connection between BCU and IPU. • Defective IPU
		1. Check the connection between the BCU and the IPU. 2. Replace the IPU.

No.	Type	Details (Symptom, Possible Cause, Troubleshooting Procedures)
231	D	FGATE OFF error: Bk
		• The PFGATE ON signal still asserts within prescribed time after processing the image in normal job or MUSIC for end position K.
		See SC 230 for troubleshooting details.

No.	Type	Details (Symptom, Possible Cause, Troubleshooting Procedures)
232	D	FGATE ON error: Y
		The PFGATE ON signal does not assert within 20 ms after processing the image in normal job or MUSIC for start position Y.
		• Poor connection between BCU and IPU. • Defective IPU
		1. Check the connection between the BCU and the IPU. 2. Replace the IPU.

No.	Type	Details (Symptom, Possible Cause, Troubleshooting Procedures)
233	D	FGATE OFF error: Y
		• The PFGATE ON signal still asserts within the prescribed time after processing the image in normal job or MUSIC for end position Y.
		See SC 232 for troubleshooting details.

No.	Type	Details (Symptom, Possible Cause, Troubleshooting Procedures)
234	D	FGATE ON error: C
		The PFGATE ON signal does not assert within 20 ms after processing the image in normal job or MUSIC for start position C.
		• Poor connection between BCU and IPU • Defective IPU
		1. Check the connection between the BCU and the IPU. 2. Replace the IPU.

No.	Type	Details (Symptom, Possible Cause, Troubleshooting Procedures)
235	D	FGATE OFF error: C
		• The PFGATE ON signal still asserts within the prescribed time after processing the image in normal job or MUSIC for end position C.
		See SC 234 for troubleshooting details.

No.	Type	Details (Symptom, Possible Cause, Troubleshooting Procedures)
236	D	FGATE ON error: M
		The PFGATE ON signal does not assert within 20 ms after processing the image in normal job or MUSIC for start position M.
		• Poor connection between BCU and IPU • Defective IPU
		1. Check the connection between the BCU and the IPU. 2. Replace the IPU.

No.	Type	Details (Symptom, Possible Cause, Troubleshooting Procedures)
237	D	FGATE OFF error: M
		• The PFGATE ON signal still asserts within the prescribed time after processing the image in normal job or MUSIC for end position M.
		See SC 234 for troubleshooting details.

No.	Type	Details (Symptom, Possible Cause, Troubleshooting Procedures)
240	C	LD error: Bk
241	C	LD error: C
242	C	LD error: M
243	C	LD error: Y

No.	Type	Details (Symptom, Possible Cause, Troubleshooting Procedures)
-	-	The IPU detects excessive current (100 mA or more) while the LDB unit is firing.
		• Poor connection between laser unit and IPU • Poor connection around PSU-G and FIB • Worn-out LD • Defective LD board
		1. Check the harness connection (laser unit and IPU). 2. Check the harness connection of PSU-G and FIB 3. Replace the laser unit.

No.	Type	Details (Symptom, Possible Cause, Troubleshooting Procedures)
250	D	Laser synchronizing detection error: Start position [Y]: LD1
251	D	Laser synchronizing detection error: Start position [M]: LD1
252	D	Laser synchronizing detection error: Start position [C]: LD1
253	D	Laser synchronizing detection error: Start position [K]: LD1
254	D	Laser synchronizing detection error: Start position [Y]: LD2
255	D	Laser synchronizing detection error: Start position [M]: LD2
256	D	Laser synchronizing detection error: Start position [C]: LD2
257	D	Laser synchronizing detection error: Start position [K]: LD2
-	-	The laser synchronizing detection signal for the start position of the LDB [Y], [M], [C] or [K] is not detected while the LDB unit is in the READY state.
		• Disconnected or defective harness to synchronizing detector for start position • Defective laser synchronizing detector for start position • Defective LDB
		1. Check the harness connection between IPU and laser unit or around OPI. 2. Check the connectors inside the laser unit. 3. Replace the laser synchronizing detector for start position. 4. Replace the laser unit.

No.	Type	Details (Symptom, Possible Cause, Troubleshooting Procedures)
258	C	Laser synchronizing detection error: End position [Y]
259	C	Laser synchronizing detection error: End position [M]
260	C	Laser synchronizing detection error: End position [C]
261	C	Laser synchronizing detection error: End position [K]
-	-	The laser synchronizing detection signal for the end position of LDB [Y], [M], [C] or [K] is not detected when detecting the main scan length.
		• Disconnected or defective harness to synchronizing detector for end position • Defective synchronizing detector board for end position
		1. Check the harness connection to the laser synchronizing detector. 2. Replace the laser synchronizing detector for end position.

No.	Type	Details (Symptom, Possible Cause, Troubleshooting Procedures)
270	C	Skew correction error: [Y]
271	C	Skew correction error: [M]
272	C	Skew correction error: [C]
-	-	The accumulated pulses of the BTL adjustment motor is outside the correct range (± 150 pulses).
		• Disconnected or defective harness to the BTL adjustment motor for the LD unit. • Defective skew correction motor • Defective IOB 1
		1. Check the harness connection to the BTL adjustment motor for the LD unit. 2. Replace the laser unit. 3. Replace the IOB 1.

No.	Type	Details (Symptom, Possible Cause, Troubleshooting Procedures)
285	C	MUSIC (Mirror Unit for Skew and Interval Correction) error

No.	Type	Details (Symptom, Possible Cause, Troubleshooting Procedures)
-	-	MUSIC adjustment fails four times consecutively.
		• Color registration error is too high • Defective MUSIC sensor • Low toner density
		1. Check the amount of toner. 2. Replace the MUSIC and ID sensor board.

Service Call Tables - 3

SC Codes Group 3: Image Development – 1

No.	Type	Details (Symptom, Possible Cause, Troubleshooting Procedures)
300	D	Charge corona wire high voltage error: K
301	D	Charge corona wire high voltage error: C
302	D	Charge corona wire high voltage error: M
303	D	Charge corona wire high voltage error: Y
-	-	The high voltage error signal of the charge corona wire is detected for 60 ms or more.
		• Disconnected harnesses • Defective charge corona unit • Defective CGB HVPS • Defective BCU • Defective ground plate of the drum unit
		1. Check the harness connection. 2. Reinstall or replace the charge corona unit. 3. Replace the CGB HVPS. 4. Replace the BCU. 5. Replace the drum unit.

No.	Type	Details (Symptom, Possible Cause, Troubleshooting Procedures)
304	D	Charge grid high voltage error: K
305	D	Charge grid high voltage error: C
306	D	Charge grid high voltage error: M
307	D	Charge grid high voltage error: Y

No.	Type	Details (Symptom, Possible Cause, Troubleshooting Procedures)
-	-	The high voltage error signal of the charge grid is detected for 60 ms or more.
		• Disconnected harnesses • Defective charge corona unit • Defective CGB HVPS • Defective BCU
		1. Reinstall the charge corona unit 2. Check the harness connection. 3. Replace the charge corona unit. 4. Replace the CGB HVPS. 5. Replace the BCU.

No.	Type	Details (Symptom, Possible Cause, Troubleshooting Procedures)
308	D	Charge cleaning unit: Position error: K
309	D	Charge cleaning unit: Position error: C
310	D	Charge cleaning unit: Position error: M
311	D	Charge cleaning unit: Position error: Y

No.	Type	Details (Symptom, Possible Cause, Troubleshooting Procedures)
-	-	The machine does not detect an "OFF" signal from the cleaning unit HP sensor for 3 seconds after the cleaning pad unit has moved to the rear side from its home position (front side). The machine does not detect an "ON" signal from the cleaning unit HP sensor for 18 seconds after the cleaning pad unit has returned to its home position (front side) from the rear side.
		• Disconnected harnesses (charge cleaning HP sensor or charge cleaning motor) • Defective charge cleaning HP sensor • Defective charge cleaning motor
		1. Check if the charge cleaning HP sensor is correctly set or the sensor bracket is not bent. 2. Check the harness connection of sensor and motor. 3. Replace the charge cleaning HP sensor. 4. Replace the charge cleaning motor.

No.	Type	Details (Symptom, Possible Cause, Troubleshooting Procedures)
320	D	Development bias: high voltage error: K
321	D	Development bias: high voltage error: C
322	D	Development bias: high voltage error: M
323	D	Development bias: high voltage error: Y
-	-	The high voltage error signal of the development unit is detected for 60 ms or more.
		• Defective development HVPS
		1. Check the harness connection of the development HVPS. 2. Replace the development HVPS. 3. Replace the development unit.

No.	Type	Details (Symptom, Possible Cause, Troubleshooting Procedures)
324	D	Development motor error: K

No.	Type	Details (Symptom, Possible Cause, Troubleshooting Procedures)
325	D	Development motor error: C
326	D	Development motor error: M
327	D	Development motor error: Y
-	-	The lock signal remained HIGH or LOW for longer than the prescribed time for the K, M, C, or Y, development motor.
		• Disconnected harness from the development motor • Development motor shaft locked, blocked by obstruction • +24V off • Development motor defective

		1. Check if the developer in the development unit is stuck.
		2. Check the development motor operation with Output Check (SP5-804-162 to -165) after the development unit has been pulled out from the machine.
		3. Check the harness connection of the development motor.
		4. Remove the obstruction around the development motor shaft.
		5. Check if the +24V at the motor connector is ON. If not, check the following:
		  • Check if 24V is output from the PSU-EB.
		  • Check all harness connections on the PSU-EB.
		  • Replace the PSU-EB.
		6. Replace the development motor.

No.	Type	Details (Symptom, Possible Cause, Troubleshooting Procedures)
328	D	Toner supply motor error
-	-	2 sec. after the motor START signal is output, a LOCK signal cannot be detected.
		• Motor harness disconnected, loose, or defective • Toner pump overload • Sub hopper overload • Toner supply motor defective
		1. Remove the obstruction around the sub-hopper unit. 2. Replace the sub-hopper unit.

No.	Type	Details (Symptom, Possible Cause, Troubleshooting Procedures)
332	D	Toner supply error: K
333	D	Toner supply error: C
334	D	Toner supply error: M
335	D	Toner supply error: Y
-	-	The machine fails the toner filling up for a color after the toner end sensor detected "Toner Empty". • Toner condensation in the toner bottle • Toner stuck in the toner supply tube • Bent toner supply tube • Defective toner pump • Defective toner bottle motor 1. Straighten the toner supply tube. 2. Clean the toner supply tube with a vacuum. (☛ "Remaining Toner Detection Error" under "Troubleshooting" chapter in the Field Service Manual.) 3. Replace the toner pump. 4. Replace the toner bottle motor, and then execute SP2-253-xxx. (-001: K, -002: C, -003: M, -004: Y, -005: YMC, -006: All colors) **Important** • **When executing SP2-253-xxx, make sure the following conditions;** • **Fist, turn off and on the machine after opening the front left or right door.** • **Make sure that the target color toner bottle is installed and the toner hopper cover is close.** • **Enter the SP mode, and then execute SP2-253-xxx.**

No.	Type	Details (Symptom, Possible Cause, Troubleshooting Procedures)
344	D	Drum cleaning motor LOCK error: K
345	D	Drum cleaning motor LOCK error: C
346	D	Drum cleaning motor LOCK error: M
347	D	Drum cleaning motor LOCK error: Y

No.	Type	Details (Symptom, Possible Cause, Troubleshooting Procedures)
-	-	The lock signal remained HIGH or LOW for longer than the prescribed time for the K, M, C, or Y, drum cleaning motor.
		• Drum cleaning blade turned up (flipped) • Waste toner stuck in the drum cleaning unit • Drum filming • Disconnected harness from the drum cleaning motor • Drum cleaning motor shaft locked, blocked by obstruction • Drum cleaning motor defective
		1. Check or replace the drum cleaning blade. 2. Clear the waste toner stuck in the drum cleaning unit. 3. Check the harness connection of the drum cleaning motor. 4. Remove the obstruction around the drum cleaning motor shaft. 5. Replace the drum cleaning motor.

No.	Type	Details (Symptom, Possible Cause, Troubleshooting Procedures)
348	D	Toner pump error: K
349	D	Toner pump error: C
350	D	Toner pump error: M
351	D	Toner pump error: Y
-	-	The toner end sensor for a color does not detect toner for 120 seconds after the toner pump clutch turned on.
		• Bad connection of the toner supply tube between the toner bottle and toner pump. • Defective toner pump • Defective toner bottle motor
		1. Check or reinstall the toner supply tube, 2. Replace the toner pump. 3. Replace the toner bottle motor.

No.	Type	Details (Symptom, Possible Cause, Troubleshooting Procedures)
352	D	Toner bottle motor error: K
353	D	Toner bottle motor error: C
354	D	Toner bottle motor error: M
355	D	Toner bottle motor error: Y
-	-	If the error flag occurs for a toner bottle motor 5 times, the machine issues this SC. This error flag is calculated as follows. • The error flag of the toner bottle motor is made when the machine detects a LOCK signal of the toner bottle motor for 0.9 seconds during the toner bottle motor rotating (1 second). • The error flag of the toner bottle motor is cleared when the machine detects a LOCK signal of the toner bottle motor less than 0.9 seconds during the toner bottle motor rotating (1 second).
		• Solidified toner in the toner bottle • Toner supply tube bent • Incorrect setting of the toner bottle • Broken toner bottle
		1. Shake the toner bottle five or six times. 2. Check if the toner supply tube to sub-hopper unit is bent. 3. Check and reinstall the toner bottle. 4. Replace the toner bottle.

No.	Type	Details (Symptom, Possible Cause, Troubleshooting Procedures)
356	D	Development roller error: K
357	D	Development roller error: C
358	D	Development roller error: M
359	D	Development roller error: Y

No.	Type	Details (Symptom, Possible Cause, Troubleshooting Procedures)
-	-	The development roller sensor for a color does not detect the rotation of the development roller for 0.5 seconds after the development motor for each color has turned on.
		• Defective development unit drive gears • Defective development roller sensor
		1. Replace the development unit drive gears. 2. Replace the development roller sensor.

No.	Type	Details (Symptom, Possible Cause, Troubleshooting Procedures)
360	D	Low toner density error: K
361	D	Low toner density error: C
362	D	Low toner density error: M
363	D	Low toner density error: Y
-	-	The output from the TD sensor for a color exceeds 3.5V or more during image processing.
		• Insufficient toner • Disconnected or defective harness • Defective TD sensor
		1. Replace the toner bottle. 2. Check the harness connection. 3. Replace the TD sensor.

No.	Type	Details (Symptom, Possible Cause, Troubleshooting Procedures)
364	D	High toner density error: K
365	D	High toner density error: C
366	D	High toner density error: M
367	D	High toner density error: Y

No.	Type	Details (Symptom, Possible Cause, Troubleshooting Procedures)
-	-	The output from the TD sensor for a color goes below 1.5V during image processing.
		• Too much toner • Disconnected or defective harness • Defective TD sensor
		1. Print a job without toner supply (Set the SP setting of 2-252 to "0"). 2. Replace the developer. 3. Replace the TD sensor. 4. Replace the development unit.

No.	Type	Details (Symptom, Possible Cause, Troubleshooting Procedures)
372	D	TD sensor adjustment error: K
373	D	TD sensor adjustment error: C
374	D	TD sensor adjustment error: M
375	D	TD sensor adjustment error: Y
-	-	During TD sensor initialization, the output value of the black, magenta, cyan, or yellow TD sensor is not within the range of the specified value (default: 2.5V) ±0.1V
		• TD sensor harness disconnected, loose or defective • TD sensor defective • Development unit defective
		1. Check the harness connection of the TD sensor. 2. Replace the TD sensor. 3. Replace the development unit.

No.	Type	Details (Symptom, Possible Cause, Troubleshooting Procedures)
388	C	Quenching error: K
389	C	Quenching error: C
390	C	Quenching error: M

No.	Type	Details (Symptom, Possible Cause, Troubleshooting Procedures)
391	C	Quenching error: Y
-	-	The drum potential sensor for a color detects 2.0V (Vd: 400V) or more for 0.3 seconds after the charge corona wire has turned off.
		• Disconnected or broken harness of the quenching lamp • Dirty surface of the quenching lamp glass
		1. Check the harness or harness connection. 2. Clean the surface of the quenching lamp glass.

No.	Type	Details (Symptom, Possible Cause, Troubleshooting Procedures)
396		Drum rotation error: K
397		Drum rotation error: C
398		Drum rotation error: M
399		Drum rotation error: Y

No.	Type	Details (Symptom, Possible Cause, Troubleshooting Procedures)
-001	D	Drum stop error
		The drum encoder counter for a color does not increase for 20 ms while the drum motor is rotating.
		• Drum cleaning blade turned up (flipped) • Waste toner stuck in the drum cleaning unit • Drum filming • Developer stuck in the development unit • Motor lock due to the overload to the drum motor • Defective drum rotation sensor or harness • Defective drum motor • Defective or dirty drum encoder
		1. Check if the drum cleaning blade is bent. 2. Check or replace the drum cleaning unit. 3. Check or replace the development unit. 4. Check the harness connection. 5. Replace the drum rotation sensor 6. Replace the drum motor 7. Replace the drum encoder.
-002	D	Drum rotation speed error
		The drum rotation time for a color change is more than ±5% compared with a previous rotation time after 4 seconds has elapsed from the drum start.
		• Possible causes are same as SC396-001.
		Countermeasures are same as SC396-001.
-003	D	Drum abnormal rotation error
		The drum rotation pulse for a color changes more than ±20% compared with the standard rotation pulse.
		• Possible causes are same as SC396-001.
		Countermeasures are same as SC396-001.

Service Call Tables - 4-1

SC Codes Group 4: Image Development - 2

No.	Type	Details (Symptom, Possible Cause, Troubleshooting Procedures)
400	D	ID sensor error: Calibration
		Before adjustment Vsg_reg<0.5, but Vsg_reg could not be adjusted to the target Vsg_reg = 4.0 ±0.5V during process control.
		• ID sensor harness disconnected, loose, defective • ID sensor dirty • ID sensor defective • ID/ MUSIC sensor shutter defective • ITB dirty • ITB incorrectly set
		1. Check the harness connection. 2. Clean the drawer connector of the registration unit drawer. 3. Clean the image transfer belt. 4. Check if the image transfer belt is correctly set. 5. Clean or replace the ID/ MUSIC sensors.

No.	Type	Details (Symptom, Possible Cause, Troubleshooting Procedures)
410	D	ID sensor error: Development gamma K
411	D	ID sensor error: Development gamma C
412	D	ID sensor error: Development gamma M
413	D	ID sensor error: Development gamma Y

No.	Type	Details (Symptom, Possible Cause, Troubleshooting Procedures)
		Development gamma for black, magenta, cyan, or yellow is not within range (0.3 to 6.0). Process control halts when this SC is issued.
		• ID/ MUSIC sensor shutter defective • LD sensor harness loose, broken, defective • LD unit not firing • CGB HVPS harness loose, broken, defective • CGB HVPS defective • Developer worn
		Check the result of process control with SP3-821-001. **Result code: 55 or 59** • Replace the developer. **Result code: 56** 1. Clean the dust shield glass of the LD unit. 2. Replace the CGB HVPS. **Result code: 61** 1. Check the harness connection to the LD unit. 2. Replace the LD unit.

No.	Type	Details (Symptom, Possible Cause, Troubleshooting Procedures)
414	D	ID sensor error: Development start voltage K
415	D	ID sensor error: Development start voltage C
416	D	ID sensor error: Development start voltage M
417	D	ID sensor error: Development start voltage Y

No.	Type	Details (Symptom, Possible Cause, Troubleshooting Procedures)
		The development start voltage in the development of the black, magenta, cyan, or yellow PCU is not within the correct range (±150V)
		• ID/ MUSIC sensor shutter defective • LD sensor harness loose, broken, defective • LD unit not firing • CGB HVPS harness loose, broken, defective • CGB HVPS defective • Developer worn
		Check the result of process control with SP3-821-001. **Result code: 57** • Replace the developer. **Result code: 58** 1. Check if the ID/ MUSIC sensor is clean. 2. Clean the ID/ MUSIC sensor. 3. Replace the developer.

No.	Type	Details (Symptom, Possible Cause, Troubleshooting Procedures)
418	D	LED error during Vsg adjustment
		PWM value: Ifsg > 1,000 or Ifsg < 50 This means the current to the LED of the ID sensor is abnormal.
		• ID sensor dirty or defective • ITB dirty or scratched • ID/ MUSIC sensor shutter defective
		1. Check the harness connection to the ID/ MUSIC sensors. 2. Clean or replace the ID/ MUSIC sensors. 3. ITB cleaning unit.

No.	Type	Details (Symptom, Possible Cause, Troubleshooting Procedures)
420	C	Potential sensor error: Vd Adjustment K

No.	Type	Details (Symptom, Possible Cause, Troubleshooting Procedures)
421	C	Potential sensor error: Vd Adjustment C
422	C	Potential sensor error: Vd Adjustment M
423	C	Potential sensor error: Vd Adjustment Y
		The drum potential sensor detects 150V or more on the drum (Vd) for 0.7 msec. when the high voltage charge is supplied to the drum for the initial sampling before exposure.
		• Drum potential sensor harness, connector is loose, broken, defective • Drum potential sensor dirty • Drum potential sensor defective • Drum connector, harness loose, broken, defective • Drum worn
		1. Clean the drum potential sensor. 2. Replace the drum unit.

No.	Type	Details (Symptom, Possible Cause, Troubleshooting Procedures)
424	C	Potential sensor error: Vl adjustment K
425	C	Potential sensor error: Vl adjustment C
426	C	Potential sensor error: Vl adjustment M
427	C	Potential sensor error: Vl adjustment Y
		Vpl could not be adjusted to within ±5V of the target Vpl after exposure of the ID sensor patterns.
		• Drum potential sensor dirty or defective • Drum worn • Poor drum ground connection
		1. Clean the drum potential sensor. 2. Replace the drum unit.

No.	Type	Details (Symptom, Possible Cause, Troubleshooting Procedures)
432	C	Potential sensor error 1: Vr adjustment K
433	C	Potential sensor error 2: Vr adjustment C
434	C	Potential sensor error 3: Vr adjustment M
435	C	Potential sensor error 4: Vr adjustment Y
		Vr < –200V. The residual voltage (Vr), the amount of voltage that remains on the surface of the drum after the QL fires is less than –200V.
		• Drum potential sensor dirty • Drum potential sensor defective • Drum worn
		1. Clean the drum potential sensor. 2. Replace the drum unit.

No.	Type	Details (Symptom, Possible Cause, Troubleshooting Procedures)
436	D	Potential sensor error: Vd adjustment K
437	D	Potential sensor error: Vd adjustment C
438	D	Potential sensor error: Vd adjustment M
439	D	Potential sensor error: Vd adjustment Y
		The Vd Home reading, the first step of the process control self-check, detected that the development potential of the unexposed areas of the drum are not within the prescribed range (-500 to -900)
		• Drum potential sensor dirty • Drum potential sensor defective
		Clean or replace the drum potential sensor.

No.	Type	Details (Symptom, Possible Cause, Troubleshooting Procedures)
440	D	Image transfer HVPS error: K
441	D	Image transfer HVPS error: C
442	D	Image transfer HVPS error: M

No.	Type	Details (Symptom, Possible Cause, Troubleshooting Procedures)
443	D	Image transfer HVPS error: Y
		An interrupt checks the status of the HVPS every 10 ms. This SC is issued if the BCU detects a short in the HVPS for K, M, C, or Y.
		• Transfer HVPS cable disconnected or damaged • Transfer HVPS defective
		1. Check the cables or cable connections of the transfer HVPS. 2. Replace the transfer HVPS.

No.	Type	Details (Symptom, Possible Cause, Troubleshooting Procedures)
446	D	ITB black lift sensor error
447	D	ITB color lift sensor error
		The ITB black/color lift sensor does not detect an "OFF" signal for 884 ms after machine initializing or for 484 ms after job end. The ITB black/color lift sensor does not detect an "ON" signal for 484 ms after a print job has been processed.
		• Overload on the ITB black lift motor • Lift spring worn out • ITB black/color lift sensor defective
		1. Clear the overload on the ITB black/color lift motor. 2. Replace the ITB black/color lift sensor.

No.	Type	Details (Symptom, Possible Cause, Troubleshooting Procedures)
450	D	PTR HVPS output error
		An interrupt checks the status of the PTR HVPS every 10 ms. This SC is issued if the BCU detects a short in the PTR HVPS 10 times within 500 ms.
		• The output voltage from the PTR HVPS is leaking.
		Replace the transfer HVPS.

No.	Type	Details (Symptom, Possible Cause, Troubleshooting Procedures)
452	C	PTR HVPS: low voltage error
		The machine detects low voltage (0.1 V or less) from the PTR HVPS.
		• The resistant rate of the ITB bias roller decreases due to HH environment.
		This SC does not affect the machine's operation. This is for analytical use only.

No.	Type	Details (Symptom, Possible Cause, Troubleshooting Procedures)
453	C	ITB Bias Roller End
		The machine detected an abnormal reading of the resistance of the ITB bias roller because it is near the end of its service life.
		• Check the connections to the transfer HVPS • Replace the image transfer roller • Transfer HVPS defective
		1. Replace the ITB bias roller. 2. Check the harness connection to the transfer HVPS. 3. Replace the transfer HVPS.

No.	Type	Details (Symptom, Possible Cause, Troubleshooting Procedures)
456 -001	C	Image Transfer Roller End: K (LLL)
		The machine detected an abnormal reading of the resistance of the image transfer roller for Black in LLL condition because it is near the end of its service life. LLL: Absolute humidity is 2.5 g/m^3 or less.
		• Check the connections between the transfer HVPS and the roller. • Service life of image transfer roller for Black is near end. • Transfer HVPS defective
		1. Replace the image transfer roller for Black. 2. Check the connections between the transfer HVPS and the roller. 3. Replace the transfer HVPS.

No.	Type	Details (Symptom, Possible Cause, Troubleshooting Procedures)
456 -002	C	Image Transfer Roller End: K (LL)
		The machine detected an abnormal reading of the resistance of the image transfer roller for Black in LL condition because it is near the end of its service life. LL: Absolute humidity is more than 2.5 g/m^3 and 5.0 g/m^3 or less.
		• Possible causes are same as SC456-001.
		Countermeasures are same as SC456-001.

No.	Type	Details (Symptom, Possible Cause, Troubleshooting Procedures)
456 -003	C	Image Transfer Roller End: K (ML)
		The machine detected an abnormal reading of the resistance of the image transfer roller for Black in ML condition because it is near the end of its service life. ML: Absolute humidity is more than 5.0 g/m^3 and 8.4 g/m^3 or less.
		• Possible causes are same as SC456-001.
		Countermeasures are same as SC456-001.

No.	Type	Details (Symptom, Possible Cause, Troubleshooting Procedures)
456 -004	C	Image Transfer Roller End: K (MM)
		The machine detected an abnormal reading of the resistance of the transfer roller because it is near the end of its service life.
		The machine detected an abnormal reading of the resistance of the image transfer roller for Black in MM condition because it is near the end of its service life. MM: Absolute humidity is more than 8.4 g/m^3 and 15.0 g/m^3 or less.
		• Possible causes are same as SC456-001.
		Countermeasures are same as SC456-001.

No.	Type	Details (Symptom, Possible Cause, Troubleshooting Procedures)
456 -005	C	Image Transfer Roller End: K (MH)
		The machine detected an abnormal reading of the resistance of the image transfer roller for Black in MH condition because it is near the end of its service life. MH: Absolute humidity is more than 15.0 g/m^3 and 24.0 g/m^3 or less.
		• Possible causes are same as SC456-001.
		Countermeasures are same as SC456-001.

No.	Type	Details (Symptom, Possible Cause, Troubleshooting Procedures)
456 -006	C	Image Transfer Roller End: K (HH)
		The machine detected an abnormal reading of the resistance of the image transfer roller for K in MH condition because it is near the end of its service life. HH: Absolute humidity is more than 24.0 g/m^3.
		• Possible causes are same as SC456-001.
		Countermeasures are same as SC456-001.

No.	Type	Details (Symptom, Possible Cause, Troubleshooting Procedures)
457 -001	C	Image Transfer Roller End: C (LLL)
		The machine detected an abnormal reading of the resistance of the image transfer roller for Cyan in LLL condition because it is near the end of its service life. LLL: Absolute humidity is 2.5 g/m^3 or less.
		• Check the connections between the transfer HVPS and the roller. • Service life of image transfer roller for Cyan is near end. • Transfer HVPS defective
		1. Replace the image transfer roller for Cyan. 2. Check the connections between the transfer HVPS and the roller. 3. Replace the transfer HVPS.

No.	Type	Details (Symptom, Possible Cause, Troubleshooting Procedures)
457 -002	C	Image Transfer Roller End: C (LL)
		The machine detected an abnormal reading of the resistance of the image transfer roller for Cyan in LL condition because it is near the end of its service life. LL: Absolute humidity is more than 2.5 g/m^3 and 5.0 g/m^3 or less.
		• Possible causes are same as SC457-001.
		Countermeasures are same as SC457-001.

No.	Type	Details (Symptom, Possible Cause, Troubleshooting Procedures)
457 -003	C	Image Transfer Roller End: C (ML)
		The machine detected an abnormal reading of the resistance of the image transfer roller for Cyan in ML condition because it is near the end of its service life. ML: Absolute humidity is more than 5.0 g/m^3 and 8.4 g/m^3 or less.
		• Possible causes are same as SC457-001.
		Countermeasures are same as SC457-001.

No.	Type	Details (Symptom, Possible Cause, Troubleshooting Procedures)
457 -004	C	Image Transfer Roller End: C (MM)
		The machine detected an abnormal reading of the resistance of the image transfer roller for Cyan in MM condition because it is near the end of its service life. MM: Absolute humidity is more than 8.4 g/m^3 and 15.0 g/m^3 or less.
		• Possible causes are same as SC457-001.
		Countermeasures are same as SC457-001.

No.	Type	Details (Symptom, Possible Cause, Troubleshooting Procedures)
457 -005	C	Image Transfer Roller End: C (MH)
		The machine detected an abnormal reading of the resistance of the image transfer roller for Cyan in MH condition because it is near the end of its service life. MH: Absolute humidity is more than 15.0 g/m^3 and 24.0 g/m^3 or less.
		• Possible causes are same as SC457-001.
		Countermeasures are same as SC457-001.

No.	Type	Details (Symptom, Possible Cause, Troubleshooting Procedures)
457 -006	C	Image Transfer Roller End: C (HH)
		The machine detected an abnormal reading of the resistance of the image transfer roller for Cyan in HH condition because it is near the end of its service life. HH: Absolute humidity is more than 24.0 g/m^3.
		• Possible causes are same as SC457-001.
		Countermeasures are same as SC457-001.

No.	Type	Details (Symptom, Possible Cause, Troubleshooting Procedures)
458 -001	C	Image Transfer Roller End: M (LLL)
		The machine detected an abnormal reading of the resistance of the image transfer roller for Magenta in LLL condition because it is near the end of its service life. LLL: Absolute humidity is 2.5 g/m^3 or less.
		• Check the connections between the transfer HVPS and the roller. • Service life of image transfer roller for Magenta is near end. • Transfer HVPS defective
		1. Replace the image transfer roller for Magenta. 2. Check the connections between the transfer HVPS and the roller. 3. Replace the transfer HVPS.

No.	Type	Details (Symptom, Possible Cause, Troubleshooting Procedures)
458 -002	C	Image Transfer Roller End: M (LL)
		The machine detected an abnormal reading of the resistance of the image transfer roller for Magenta in LL condition because it is near the end of its service life. LL: Absolute humidity is more than 2.5 g/m^3 and 5.0 g/m^3 or less.
		• Possible causes are same as SC458-001.
		Countermeasures are same as SC458-001.

No.	Type	Details (Symptom, Possible Cause, Troubleshooting Procedures)
458 -003	C	Image Transfer Roller End: M (ML)
		The machine detected an abnormal reading of the resistance of the image transfer roller for Magenta in ML condition because it is near the end of its service life. ML: Absolute humidity is more than 5.0 g/m^3 and 8.4 g/m^3 or less.
		• Possible causes are same as SC458-001.
		Countermeasures are same as SC458-001.

No.	Type	Details (Symptom, Possible Cause, Troubleshooting Procedures)
458 -004	C	Image Transfer Roller End: M (MM)
		The machine detected an abnormal reading of the resistance of the image transfer roller for Magenta in MM condition because it is near the end of its service life. MM: Absolute humidity is more than 8.4 g/m^3 and 15.0 g/m^3 or less.
		• Possible causes are same as SC458-001.
		Countermeasures are same as SC458-001.

No.	Type	Details (Symptom, Possible Cause, Troubleshooting Procedures)
458 -005	C	Image Transfer Roller End: M (MH)
		The machine detected an abnormal reading of the resistance of the image transfer roller for Magenta in MH condition because it is near the end of its service life. MH: Absolute humidity is more than 15.0 g/m^3 and 24.0 g/m^3 or less.
		• Possible causes are same as SC458-001.
		Countermeasures are same as SC458-001.

No.	Type	Details (Symptom, Possible Cause, Troubleshooting Procedures)
458 -006	C	Image Transfer Roller End: M (HH)
		The machine detected an abnormal reading of the resistance of the image transfer roller for Magenta in HH condition because it is near the end of its service life. HH: Absolute humidity is more than 24.0 g/m^3.
		• Possible causes are same as SC458-001.
		Countermeasures are same as SC458-001.

No.	Type	Details (Symptom, Possible Cause, Troubleshooting Procedures)
459 -001	C	Image Transfer Roller End: Y (LLL)
		The machine detected an abnormal reading of the resistance of the image transfer roller for Yellow in LLL condition because it is near the end of its service life. LLL: Absolute humidity is 2.5 g/m^3 or less.
		• Check the connections between the transfer HVPS and the roller. • Service life of image transfer roller for Yellow is near end. • Transfer HVPS defective
		1. Replace the image transfer roller for Yellow. 2. Check the connections between the transfer HVPS and the roller. 3. Replace the transfer HVPS.

No.	Type	Details (Symptom, Possible Cause, Troubleshooting Procedures)
459 -002	C	Image Transfer Roller End: Y (LL)
		The machine detected an abnormal reading of the resistance of the image transfer roller for Yellow in LL condition because it is near the end of its service life. LL: Absolute humidity is more than 2.5 g/m^3 and 5.0 g/m^3 or less.
		• Possible causes are same as SC459-001.
		Countermeasures are same as SC459-001.

No.	Type	Details (Symptom, Possible Cause, Troubleshooting Procedures)
459 -003	C	Image Transfer Roller End: Y (ML)
		The machine detected an abnormal reading of the resistance of the image transfer roller for Yellow in ML condition because it is near the end of its service life. ML: Absolute humidity is more than 5.0 g/m^3 and 8.4 g/m^3 or less.
		• Possible causes are same as SC459-001.
		Countermeasures are same as SC459-001.

No.	Type	Details (Symptom, Possible Cause, Troubleshooting Procedures)
459 -004	C	Image Transfer Roller End: Y (MM)
		The machine detected an abnormal reading of the resistance of the image transfer roller for Yellow in MM condition because it is near the end of its service life. MM: Absolute humidity is more than 8.4 g/m^3 and 15.0 g/m^3 or less.
		• Possible causes are same as SC459-001.
		Countermeasures are same as SC459-001.

No.	Type	Details (Symptom, Possible Cause, Troubleshooting Procedures)
459 -005	C	Image Transfer Roller End: Y (MH)
		The machine detected an abnormal reading of the resistance of the image transfer roller for Yellow in MH condition because it is near the end of its service life. MH: Absolute humidity is more than 15.0 g/m^3 and 24.0 g/m^3 or less.
		• Possible causes are same as SC459-001.
		Countermeasures are same as SC459-001.

No.	Type	Details (Symptom, Possible Cause, Troubleshooting Procedures)
459 -006	C	Image Transfer Roller End: Y (HH)
		The machine detected an abnormal reading of the resistance of the image transfer roller for Yellow in HH condition because it is near the end of its service life. HH: Absolute humidity is more than 24.0 g/m^3.
		• Possible causes are same as SC459-001.
		Countermeasures are same as SC459-001.

No.	Type	Details (Symptom, Possible Cause, Troubleshooting Procedures)
460	D	Separation HV output error
		An interrupt checks the status of the HVPS every 10 ms. This SC is issued if the BCU detects a short in the HVPS 20 times at PWM D(ac).
		• Damaged insulation on the PTR HVPS cable • Damaged insulation around the PTR HVPS
		1. Replace the PTR HVPS cable. 2. Replace the PTR HVPS. 3. Replace the RCB.

No.	Type	Details (Symptom, Possible Cause, Troubleshooting Procedures)
465	C	ITB cleaning unit set error
		The machine detects a setting error for the ITB cleaning unit while both front doors are closed.
		• Incorrect installation of the ITB cleaning unit
		Check and reinstall the ITB cleaning unit.

Service Call Tables - 4-2

No.	Type	Details (Symptom, Possible Cause, Troubleshooting Procedures)
469	D	ITB cleaning motor lock error
		The machine detects an error of the ITB cleaning motor while it is rotating.
		• Harness to the ITB cleaning motor disconnected • Overload to the ITB cleaning motor • ITB cleaning motor defective
		1. Check the harness connection to the ITB cleaning motor. 2. Remove the obstacle that affects the ITB cleaning motor. 3. Replace the ITB cleaning motor.

No.	Type	Details (Symptom, Possible Cause, Troubleshooting Procedures)
470		ITB rotation error (Speed error)
-01	D	The machine detects a big speed difference while the ITB drive motor is rotating.
		• Overload on the ITB drive motor (ITB cleaning blade rolled in) or motor defective • Defective belt speed sensor • Dirty or broken encoder for the belt speed sensor
		1. Check or replace the ITB drive motor. 2. Check the harness connection, or replace the belt speed sensor. 3. Clean the encoder for the belt speed sensor.

No.	Type	Details (Symptom, Possible Cause, Troubleshooting Procedures)
-02	D	ITB rotation error (Measurement error)
		The machine detects a data error from the belt speed sensor.
		• Overload on the ITB drive motor (ITB cleaning blade rolled in) or motor defective • Defective belt speed sensor • Dirty or broken encoder for the belt speed sensor
		1. Check or replace the ITB drive motor. 2. Check the harness connection, or replace the belt speed sensor. 3. Clean the encoder for the belt speed sensor.

No.	Type	Details (Symptom, Possible Cause, Troubleshooting Procedures)
471	D	ITB skew adjustment error: time out
		The machine cannot complete the ITB centering control for 120 seconds after the ITB motor has started rotating.
		• Belt centering roller out of home position • ITB motor rotation sensor defective • Belt centering roller sensor defective • Belt centering roller motor defective
		1. Execute "Clearing SC471/475/476". (☛ "Clearing SC 471, 475 or 476" under "Troubleshooting" chapter in the Field Service Manual.) 2. Replace the ITB motor rotation sensor. 3. Replace the belt centering roller sensor. 4. Replace the belt centering roller motor.

No.	Type	Details (Symptom, Possible Cause, Troubleshooting Procedures)
472	D	Belt centering roller HP error
		• The belt centering roller sensor does not detect the belt centering roller at HP during initialization. • The belt centering roller sensor still detects the belt centering roller at HP after the belt centering roller motor has started rotating.
		• Belt centering roller sensor detective • Belt centering roller motor defective
		1. Replace the belt centering roller sensor. 2. Replace the belt centering roller motor.

No.	Type	Details (Symptom, Possible Cause, Troubleshooting Procedures)
473	D	ITB skew error
		The machine detects the ITB skew error.
		• ITB abnormal • Belt centering roller out of home position • ITB motor rotation sensor defective • Belt centering roller sensor defective • Belt centering roller motor defective
		1. Reinstall the ITB in the opposite direction or replace it. 2. Execute "Clearing SC471/475/476". (☛"Clearing SC 471, 475 or 476" under "Troubleshooting" chapter in the Field Service Manual.) 3. Replace the ITB motor rotation sensor defective. 4. Replace the belt centering roller sensor. 5. Replace the belt centering roller motor.

No.	Type	Details (Symptom, Possible Cause, Troubleshooting Procedures)
474	D	ITB position error 1
		The belt centering sensor detects an ITB position error.
		• ITB abnormal • Belt centering roller out of home position • ITB motor rotation sensor defective • Belt centering roller sensor defective • Belt centering roller motor defective
		1. Reinstall the ITB in the opposite direction or replace it. 2. Execute "Clearing SC471/475/476". (☛ "Clearing SC 471, 475 or 476" under "Troubleshooting" chapter in the Field Service Manual.) 3. Replace the ITB motor rotation sensor defective. 4. Replace the belt centering roller sensor. 5. Replace the belt centering roller motor.

No.	Type	Details (Symptom, Possible Cause, Troubleshooting Procedures)
475	A	ITB position error 2
		The belt overrun front sensor detects an ITB position error.
		• Belt overrun sensor: front defective • ITB abnormal or worn • Belt centering roller out of home position • ITB motor rotation sensor defective • Belt centering roller sensor defective • Belt centering roller motor defective
		1. Replace the belt overrun sensor: front. 2. Reinstall the ITB in the opposite direction or replace it. 3. Execute "Clearing SC471/475/476". (☛"Clearing SC 471, 475 or 476" under "Troubleshooting" chapter in the Field Service Manual.) 4. Replace the ITB motor rotation sensor defective. 5. Replace the belt centering roller sensor. 6. Replace the belt centering roller motor.

No.	Type	Details (Symptom, Possible Cause, Troubleshooting Procedures)
476	A	ITB position error 3
		The belt overrun rear sensor detects an ITB position error.
		• Belt overrun sensor: rear defective • ITB abnormal or worn • Belt centering roller out of home position • ITB motor rotation sensor defective • Belt centering roller sensor defective • Belt centering roller motor defective
		1. Replace the belt overrun sensor: rear. 2. Reinstall the ITB in the opposite direction or replace it. 3. Execute "Clearing SC471/475/476". (☛"Clearing SC 471, 475 or 476" under "Troubleshooting" chapter in the Field Service Manual.) 4. Replace the ITB motor rotation sensor defective. 5. Replace the belt centering roller sensor. 6. Replace the belt centering roller motor.

No.	Type	Details (Symptom, Possible Cause, Troubleshooting Procedures)
477	D	PTR motor lock error
		The machine detects an error of the PTR motor while it is rotating.
		• PTR cleaning blade flipped or overloaded • PTR drive overloaded • PTR motor defective
		1. Check or replace the PTR unit. 2. Check or replace the PTR motor

No.	Type	Details (Symptom, Possible Cause, Troubleshooting Procedures)
479	D	PTR position error
		The PTR lift sensor detects an error of the PTR lift motor while it is rotating.
		• PTR lift sensor detective • PTR lift motor defective
		1. Check or replace the PTR lift sensor. 2. Check or replace the PTR lift motor.

No.	Type	Details (Symptom, Possible Cause, Troubleshooting Procedures)
480	C	ITB feed-back counter error
		The ITB feed-back sensor detects an error of the ITB feed-back encoder counter.
		• Noise
		This SC does not affect the machine's operation. This is for analytical use only.

No.	Type	Details (Symptom, Possible Cause, Troubleshooting Procedures)
485	D	Waste toner transport motor 1: Lock error
		The machine detects an error of the waste toner transport motor 1 while it is rotating.
		• Harness loose or disconnected • Waste toner transport motor 1 defective • Blocking in the toner collection tube to the waste toner bottle.
		1. Check the harness connection. 2. Replace the waste toner transport motor 1. 3. If necessary, unblock the toner transport path.

No.	Type	Details (Symptom, Possible Cause, Troubleshooting Procedures)
486	D	Waste toner transport motor 2: Lock error
		The machine detects an error of the waste toner transport motor 2 while it is rotating.
		• Harness loose or disconnected • Blocking in the toner collection tube to the waste toner bottle. • Waste toner transport motor 2 defective
		1. Check the harness connection. 2. Replace the waste toner transport motor 2.

No.	Type	Details (Symptom, Possible Cause, Troubleshooting Procedures)
489	D	Waste toner transport motor 2 sensor error
		The machine detects an error of the waste toner transport motor 2.
		• Blocking in the toner collection tube to the waste toner bottle. • Waste toner transport motor 2 defective • Waste toner transport motor 2 sensor defective
		1. Check or replace the waster toner bottle. 2. Replace the waster toner transport motor 2 3. Replace the waster toner transport motor 2 sensor

No.	Type	Details (Symptom, Possible Cause, Troubleshooting Procedures)
490 -001	D	Charge unit cleaning motor K error
		The machine detects a short or open signal of the coil in the charge unit cleaning motor K (black).
		• Harness from IOB 1 to this motor short, broken or disconnected • Coil in this motor short or open
		1. Check the harness connection. 2. Replace the harness. 3. Replace the charge corona unit cleaning motor.

No.	Type	Details (Symptom, Possible Cause, Troubleshooting Procedures)
490 -002	D	Charge unit cleaning motor C error
		The machine detects a short or open signal of the coil in the charge unit cleaning motor C (cyan).
		• Possible causes are same as SC490-001.
		Countermeasures are same as SC490-001.

No.	Type	Details (Symptom, Possible Cause, Troubleshooting Procedures)
490 -003	D	Charge unit cleaning motor M error
		The machine detects a short or open signal of the coil in the charge unit cleaning motor M (magenta).
		• Possible causes are same as SC490-001.
		Countermeasures are same as SC490-001.

No.	Type	Details (Symptom, Possible Cause, Troubleshooting Procedures)
490 -004	D	Charge unit cleaning motor Y error
		The machine detects a short or open signal of the coil in the charge unit cleaning motor Y (yellow).
		• Possible causes are same as SC490-001.
		Countermeasures are same as SC490-001.

No.	Type	Details (Symptom, Possible Cause, Troubleshooting Procedures)
490 -005	D	Drum motor K error
		The machine detects a short or open signal of the coil in the drum motor K (black).
		• Harness from IOB 1 to this motor short, broken or disconnected • Coil in this motor short or open
		1. Check the harness connection. 2. Replace the harness. 3. Replace the drum motor.

No.	Type	Details (Symptom, Possible Cause, Troubleshooting Procedures)
490 -006	D	Drum motor C error
		The machine detects a short or open signal of the coil in the drum motor C (cyan).
		• Possible causes are same as SC490-005.
		Countermeasures are same as SC490-005.

No.	Type	Details (Symptom, Possible Cause, Troubleshooting Procedures)
490 -007	D	Drum motor M error
		The machine detects a short or open signal of the coil in the drum motor M (magenta).
		• Possible causes are same as SC490-005.
		Countermeasures are same as SC490-005.

No.	Type	Details (Symptom, Possible Cause, Troubleshooting Procedures)
490 -008	D	Drum motor Y error
		The machine detects a short or open signal of the coil in the drum motor Y (yellow).
		• Possible causes are same as SC490-005.
		Countermeasures are same as SC490-005.

No.	Type	Details (Symptom, Possible Cause, Troubleshooting Procedures)
490 -009	D	IITB black lift motor error
		The machine detects a short or open signal of the coil in the ITB black motor.
		• ITB drawer incorrectly set • Harness from IOB 2 to this motor short, broken or disconnected • Coil in this motor short or open
		1. Check if the ITB drawer is correctly set. 2. Check the harness connection. 3. Replace the harness. 4. Replace the ITB black lift motor.

No.	Type	Details (Symptom, Possible Cause, Troubleshooting Procedures)
490 -010	D	ITB color lift motor error
		The machine detects a short or open signal of the coil in the ITB color motor.
		• ITB drawer incorrectly set • Harness from IOB 2 to this motor short, broken or disconnected • Coil in this motor short or open
		1. Check if the ITB drawer is correctly set. 2. Check the harness connection. 3. Replace the harness. 4. Replace the ITB color lift motor.

No.	Type	Details (Symptom, Possible Cause, Troubleshooting Procedures)
490 -011	D	Belt centering motor error
		The machine detects a short or open signal of the coil in the belt centering motor.
		• ITB drawer incorrectly set • Harness from IOB 2 to this motor short, broken or disconnected • Coil in this motor short or open
		1. Check if the ITB drawer is correctly set. 2. Check the harness connection. 3. Replace the harness. 4. Replace the belt centering motor.

No.	Type	Details (Symptom, Possible Cause, Troubleshooting Procedures)
490 -012	D	ITB drive motor error
		The machine detects a short or open signal of the coil in the ITB drive motor.
		• ITB drawer incorrectly set • Harness from IOB 2 to this motor short, broken or disconnected • Coil in this motor short or open
		1. Check if the ITB drawer is correctly set. 2. Check the harness connection. 3. Replace the harness. 4. Replace the ITB drive motor.

No.	Type	Details (Symptom, Possible Cause, Troubleshooting Procedures)
490 -013	D	PTR lift motor error
		The machine detects a short or open signal of the coil in the PTR lift motor.
		• ITB drawer incorrectly set • Harness from RCB to this motor short, broken or disconnected • Coil in this motor short or open
		1. Check the harness connection. 2. Replace the harness. 3. Replace the PTR lift motor.

No.	Type	Details (Symptom, Possible Cause, Troubleshooting Procedures)
492	D	TD sensor K error
493	D	TD sensor C error
494	D	TD sensor M error
495	D	TD sensor Y error
		• The TD sensor for a color determines that no developer is in the development unit at TD sensor initialization. • The TD sensor for a color does not detect a normal output from the development unit during printing.
		• No developer in the development unit • Agitation auger defective
		1. Check or reinstall developer in the development unit. 2. Replace the development unit.

No.	Type	Details (Symptom, Possible Cause, Troubleshooting Procedures)
496 -011	C	MUSIC sensor: Front LED adjustment error
-012	C	MUSIC sensor: Center LED adjustment error
-013	C	MUSIC sensor: Rear LED adjustment error

No.	Type	Details (Symptom, Possible Cause, Troubleshooting Procedures)
		The LED adjustment for the front, center or rear MUSIC sensor fails at the Vsg adjustment.
		• ID/MUSIC sensor unit shutter defective • Harness of sensor unit disconnected or broken • Front, center or rear MUSIC sensor defective
		1. Check the harness and connection. 2. Replace the ID/MUSIC sensor unit.

No.	Type	Details (Symptom, Possible Cause, Troubleshooting Procedures)
496 -014	C	MUSIC sensor: Front patterns error 1
-015	C	MUSIC sensor: Center patterns error 1
-016	C	MUSIC sensor: Rear patterns error 1
		The front, center or rear MUSIC sensor detects the less number of the MUSIC patterns on the ITB.
		• Sensor harness disconnected or broken • LD board(s) defective • Image transferring to the ITB insufficient
		1. Check the harness and connection. 2. Replace the laser unit(s). **Note:** If one of SC250 to SC257 has occurred before, you can tell which is the problem laser unit (YM or CK).

No.	Type	Details (Symptom, Possible Cause, Troubleshooting Procedures)
496 -017	C	MUSIC sensor: Front patterns error 2
-018	C	MUSIC sensor: Center patterns error 2
-019	C	MUSIC sensor: Rear patterns error 2

No.	Type	Details (Symptom, Possible Cause, Troubleshooting Procedures)
		The front, center or rear MUSIC sensor detects too many MUSIC patterns on the ITB.
		• ITB scratched or broken • Dust on the ITB
		1. Clean the ITB. 2. Replace the ITB.

No.	Type	Details (Symptom, Possible Cause, Troubleshooting Procedures)
496 -020	C	MUSIC sensor: Y color shift error 1
-021	C	MUSIC sensor: M color shift error 1
-022	C	MUSIC sensor: C color shift error 1
		The yellow, magenta or cyan image shifting in the sub-scan direction exceeds the capable correction range during process control
		• ITB scratched or broken • Dust on the ITB • New laser unit installed • Process control execution incorrect
		1. Execute the manual process control with SP3820-001. 2. Clean or replace the ITB. 3. Replace the laser unit YM or CK.

No.	Type	Details (Symptom, Possible Cause, Troubleshooting Procedures)
496 -023	C	MUSIC sensor: Y color shift error 2
-024	C	MUSIC sensor: M color shift error 2
-025	C	MUSIC sensor: C color shift error 2

No.	Type	Details (Symptom, Possible Cause, Troubleshooting Procedures)
		The yellow, magenta or cyan image shifting in the main-scan direction exceeds the capable correction range in the process control
		• ITB scratched or broken • Dust on the ITB • New laser unit installed • Process control incorrect
		1. Execute the manual process control with SP3820-001. 2. Clean or replace the ITB. 3. Replace the laser unit YM or CK.

No.	Type	Details (Symptom, Possible Cause, Troubleshooting Procedures)
496 -026	C	MUSIC sensor: Y magnification correction error 1
-027	C	MUSIC sensor: M magnification correction error 1
-028	C	MUSIC sensor: C magnification correction error 1
		The magnification correction in the main-scan for yellow, magenta or cyan image exceeds the capable range in the process control.
		• ITB scratched or broken • Dust on the ITB • New laser unit installed • Process control execution incorrect
		1. Execute the manual process control with SP3820-001. 2. Clean or replace the ITB. 3. Replace the laser unit YM or CK.

No.	Type	Details (Symptom, Possible Cause, Troubleshooting Procedures)
496 -029	C	MUSIC sensor: Y magnification correction error 2
-030	C	MUSIC sensor: M magnification correction error 2

No.	Type	Details (Symptom, Possible Cause, Troubleshooting Procedures)
-031	C	MUSIC sensor: C magnification correction error 2
		The left and right magnification correction in the main-scan for yellow, magenta or cyan image exceed the capable range in the process control.
		• ITB scratched or broken • Dust on the ITB • New Laser unit installed • Process control execution incorrect
		1. Execute the manual process control with SP3820-001. 2. Clean or replace the ITB. 3. Replace the laser unit YM or CK.

No.	Type	Details (Symptom, Possible Cause, Troubleshooting Procedures)
497	C	Temperature/Humidity sensor K error
		The output of the temperature sensor was not within the prescribed range (0.5V to 4.2V) for 3 minutes.
		• Temperature and humidity sensor harness disconnected, loose, defective • Temperature and humidity sensor defective
		1. Check the connector and harness. 2. Replace the temperature/humidity sensor K below the black PCDU.

Service Call Tables - 5-1

SC codes Group 5: Paper Feed

No.	Type	Details (Symptom, Possible Cause, Troubleshooting Procedures)
501	B	Tray 1 (tandem tray) feed error
		• The tray 1 lift sensor does not switch on 10 s after the tray lift motor switches on and starts lifting the bottom plate. • When the tray lowers, the tray lift sensor does not go off within 1.5 sec.
		• Tray lift motor 1 defective or disconnected • Paper or other obstacle trapped between tray and motor • Pick-up solenoid 1 disconnected or blocked by an obstacle
		1. Check the harness connection. 2. Check or clear obstacles between tray and motor.

No.	Type	Details (Symptom, Possible Cause, Troubleshooting Procedures)
502	B	Tray 2 (universal tray) feed error
		• The lift sensor is not activated within 10 seconds after the tray lift motor starts lifting the bottom plate. • When the tray lowers, the tray lift sensor does not go off within 1.5 sec.
		• Tray lift motor 2 defective or disconnected • Paper or other obstacle trapped between tray and motor • Pick-up solenoid 2 disconnected or blocked by an obstacle
		1. Check the harness connection. 2. Check or clear obstacles between tray and motor. 3. Check or clear obstacles around the pick-up solenoid.

No.	Type	Details (Symptom, Possible Cause, Troubleshooting Procedures)
503	B	Tray 3 (A4 LCT) feed error **(M077 only)**
504	B	Tray 4 (A4 LCT) feed error **(M077 only)**

No.	Type	Details (Symptom, Possible Cause, Troubleshooting Procedures)
505	B	Tray 5 (A4 LCT) feed error **(M077 only)**
		One of the following conditions is detected in tray 3, 4 or 5 of the A4 LCT: The tray 3, 4 or 5 lift sensor is not activated for 10 s after the tray 3, 4 or 5 lift motor turned on. Upper limit is not detected within 10 s while the paper tray is lifting during paper feed. The tray 3, 4 or 5 lift sensor is already activated when tray 3, 4 or 5 is placed in the machine
		• Poor connection or defective tray 3, 4 or 5 lift motor • Poor connection or defective tray 3, 4 or 5 lift sensor • Remaining paper or another obstruction has stopped the tray and motor. • Pick-up solenoid 3, 4 or 5 connector is loose. • Pick-up solenoid 3, 4 or 5 is blocked by an obstruction.
		1. Replace the tray 3, 4 or 5 lift motor. 2. Replace the tray 3, 4 or 5 lift sensor. 3. Check or clear obstacles around pick-up solenoid 3, 4, or 5.

No.	Type	Details (Symptom, Possible Cause, Troubleshooting Procedures)
506	B	Tray 3 (1st A3 LCT) feed error
507	B	Tray 4 (1st A3 LCT) feed error

No.	Type	Details (Symptom, Possible Cause, Troubleshooting Procedures)
		One of the following conditions is detected in tray 3 or 4 of the 1st A3 LCT: The tray 3 or 4 lift sensor is not activated for 10 s after the tray 3 or 4 lift motor turned on. Upper limit is not detected within 10 s while the paper tray is lifting during paper feed. The tray 3 or 4 lift sensor is already activated when tray 3 or 4 is placed in the machine
		• Poor connection or defective tray 3 or 4 lift motor • Poor connection or defective tray 3 or 4 lift sensor • Remaining paper or another obstruction has stopped the tray and motor. • Pick-up solenoid 3 or 4 connector is loose. • Pick-up solenoid 3 or 4 is blocked by an obstruction.
		1. Replace the tray 3 or 4 lift motor. 2. Replace the tray 3 or 4 lift sensor. 3. Check or clear obstacles around pick-up solenoid 3 or 4.

No.	Type	Details (Symptom, Possible Cause, Troubleshooting Procedures)
508	B	Tray 5 (2nd A3 LCT) feed error
509	B	Tray 6 (2nd A3 LCT) feed error

No.	Type	Details (Symptom, Possible Cause, Troubleshooting Procedures)
		One of the following conditions is detected in tray 5 or 6 of the 2nd A3 LCT: • The tray 5 or 6 lift sensor is not activated for 10 s after the tray 5 or 6 lift motor turned on. • Upper limit is not detected within 10 s while the paper tray is lifting during paper feed. • The tray 5 or 6 lift sensor is already activated when tray 5 or 6 is placed in the machine
		• Poor connection or defective tray 5 or 6 lift motor • Poor connection or defective tray 5 or 6 lift sensor • Remaining paper or another obstruction has stopped the tray and motor. • Pick-up solenoid 5 or 6 connector is loose. • Pick-up solenoid 5 or 6 is blocked by an obstruction.
		1. Replace the tray 5 or 6 lift motor. 2. Replace the tray 5 or 6 lift sensor. 3. Check or clear obstacles around pick-up solenoid 5 or 6.

No.	Type	Details (Symptom, Possible Cause, Troubleshooting Procedures)
510	B	Bypass Tray (tray 7) feed error
		One of the following conditions is detected in the optional bypass tray. • The bypass upper limit sensor is not activated for 10 s after the tray lift motor turned on. • The bypass lower limit sensor is not detected within 10 s while the paper tray is going down after paper feed. • The bypass tray lift sensor is already activated paper is placed in the bypass (tray 7) tray.
		• Poor connection or defective bypass tray lift motor • Poor connection or defective bypass upper limit sensor • Poor connection or defective bypass lower limit sensor • Remaining paper or another obstruction has stopped the tray and motor. • Bypass pick-up solenoid connector is loose. • Bypass pick-up solenoid is blocked by an obstruction.
		1. Check the harness connection or replace it. 2. Replace the bypass tray lift motor. 3. Replace the bypass upper limit sensor. 4. Replace the bypass lower limit sensor. 5. Check or clear obstacles around the bypass pick-up solenoid.

No.	Type	Details (Symptom, Possible Cause, Troubleshooting Procedures)
511	B	A3 LCT exit roller contact motor 1 error
512	B	A3LCT exit roller contact motor 2 error

No.	Type	Details (Symptom, Possible Cause, Troubleshooting Procedures)
		One of the following conditions is detected in the A3 LCT. • The LCT exit roller sensor is not activated within 225 pulses after the LCT exit roller contact motor has turned on at its initialization. • The LCT exit roller sensor detects for 25 pulses even after the LCT exit roller has moved away from its home position. • The LCT exit roller sensor does not detect within 25 pulses after the LCT exit roller has moved back to its home position.
		• Poor connection or defective LCT exit roller contact motor • Poor connection or defective LCT exit roller sensor
		1. Check the harness connection. 2. Replace the LCT exit roller contact motor. 3. Replace the LCT exit roller sensor.

No.	Type	Details (Symptom, Possible Cause, Troubleshooting Procedures)
520	B	Registration gate position error
		The registration gate HP sensor does not detect the registration gate position properly.
		• Dirt or defective registration gate lift sensor • Defective registration gate motor
		1. Check the harness connection of the above devices. 2. Clean or replace the registration gate lift sensor. 3. Replace the registration gate motor.

No.	Type	Details (Symptom, Possible Cause, Troubleshooting Procedures)
521	B	Shift roller unit position error
		The shift roller HP sensor does not detect the shift roller unit position properly.
		• Dirt or defective shift roller HP sensor • Defective shift roller unit motor
		1. Check the harness connection of the above devices. 2. Clean or replace the shift roller HP sensor. 3. Replace the shift roller unit motor.

No.	Type	Details (Symptom, Possible Cause, Troubleshooting Procedures)
523	B	Fusing motor lock error
		• The machine detects a rotation error of the fusing motor for 1 second after the fusing motor has rotated for 1 second. • The machine does not detect any signal from the fusing motor for 1 second when the fusing motor is in the ready condition
		• Fusing oil not circulated in the fusing unit • Overload to the fusing motor • Poor connection or defective LCT exit roller contact motor
		1. Check or replace the fusing unit. 2. Check if remaining paper or obstruction in the fusing unit stops the fusing motor drive. 3. Replace the fusing motor.

No.	Type	Details (Symptom, Possible Cause, Troubleshooting Procedures)
524	B	Paper exit motor error
		The machine detects the motor lock signal from the paper exit motor.
		• Overload on the paper exit motor because the paper transfer belt stuck to the PTB rollers. This happened because there was no operation for a long time. • Overload on the paper exit motor due to the different rotation speeds between the paper exit motor and fusing motor.
		1. Rotate the fusing knob manually. 2. Input the default setting for the paper exit motor with SP1-805-001. 3. Input the default setting for the fusing motor with SP1-907-001. 1. Replace the paper exit motor.

No.	Type	Details (Symptom, Possible Cause, Troubleshooting Procedures)
525	B	Drive motor (right) error (M379)
		The machine detects a lock signal of the drive motor (right) in the buffer pass unit (M379) for 1.2 seconds after the drive motor (right) has rotated for 2 seconds.
		• Harness disconnected or broken • Defective drive motor (right) (M379)
		1. Check or replace the harness. 2. Replace the motor (right).

No.	Type	Details (Symptom, Possible Cause, Troubleshooting Procedures)
526	B	Drive motor (left) error (M379)
		The machine detects a lock signal of the drive motor (left) in the buffer pass unit (M379) for 1.2 seconds after the drive motor (left) has rotated for 2 seconds.
		• Harness disconnected or broken • Defective drive motor (left) (M379)
		1. Check or replace the harness. 2. Replace the motor (left).

No.	Type	Details (Symptom, Possible Cause, Troubleshooting Procedures)
530 -001	D	Fan alarm 1: PTB (Paper Transport Belt) fan 1
		The machine detects a fan alarm signal from PTB fan 1 for 0.1 second during the fan operation.
		• An obstruction has stopped PTB fan 1. • Harness disconnected
		1. Pull out the fusing unit drawer and then push it into the machine. 2. Check the harness connection to PTB fan 1. 3. Replace PTB fan 1.

No.	Type	Details (Symptom, Possible Cause, Troubleshooting Procedures)
530 -002	D	Fan alarm 1: PTB (Paper Transport Belt) fan 2
		The machine detects a fan alarm signal from PTB fan 2 for 0.1 second during the fan operation.
		• An obstruction has stopped PTB fan 2. • Harness disconnected
		1. Pull out the fusing unit drawer and then push it into the machine. 2. Check the harness connection to TB fan 2. 3. Replace PTB fan 2.

No.	Type	Details (Symptom, Possible Cause, Troubleshooting Procedures)
530 -003	D	Fan alarm 1: PTB motor fan
		The machine detects a fan alarm signal from the PTB motor fan for 0.1 second during the fan operation.
		• An obstruction has stopped the PTB motor fan. • Harness disconnected
		1. Pull out the fusing unit drawer and then push it into the machine. 2. Check the harness connection to the PTB motor fan. 3. Replace the PTB motor fan.

No.	Type	Details (Symptom, Possible Cause, Troubleshooting Procedures)
530 -004	D	Fan alarm 1: Paper cooling fan 3
		The machine detects a fan alarm signal from paper cooling fan 3 for 0.1 second during the fan operation.
		• An obstruction has stopped paper cooling fan 3. • Harness disconnected
		1. Pull out the fusing unit drawer and then push it into the machine. 2. Check the harness connection to paper cooling fan 3. 3. Replace paper cooling fan 3.

No.	Type	Details (Symptom, Possible Cause, Troubleshooting Procedures)
530 -005	D	Fan alarm 1: ITB fan
		The machine detects a fan alarm signal from the ITB fan for 0.1 second during the fan operation.
		• An obstruction has stopped the ITB fan. • Harness disconnected
		1. Pull out the ITB unit drawer and then push it into the machine. 2. Check the harness connection to the ITB fan. 3. Replace the ITB fan.

No.	Type	Details (Symptom, Possible Cause, Troubleshooting Procedures)
530 -006	D	Fan alarm 1: Paper cooling fan 1
		The machine detects a fan alarm signal from paper cooling fan 1 for 0.1 second during the fan operation.
		• An obstruction has stopped paper cooling fan 1. • Harness disconnected
		1. Check the harness connection to paper cooling fan 1. 2. Replace paper cooling fan 1.

No.	Type	Details (Symptom, Possible Cause, Troubleshooting Procedures)
530 -007	D	Fan alarm 1: Paper cooling fan 2
		The machine detects a fan alarm signal from paper cooling fan 2 for 0.1 second during the fan operation.
		• An obstruction has stopped the paper cooling fan 2. • Harness disconnected
		1. Check the harness connection to paper cooling fan 2. 2. Replace paper cooling fan 2.

No.	Type	Details (Symptom, Possible Cause, Troubleshooting Procedures)
530 -008	D	Fan alarm 1: Laser unit YM fan
		The machine detects a fan alarm signal from the laser unit YM fan for 0.1 second during the fan operation.
		• An obstruction has stopped the laser unit YM fan. • Harness disconnected
		1. Check the harness connection to the laser unit YM fan. 2. Replace the laser unit YM fan.

No.	Type	Details (Symptom, Possible Cause, Troubleshooting Procedures)
530 -009	D	Fan alarm 1: Laser unit CK fan
		The machine detects a fan alarm signal from the laser unit CK fan for 0.1 second during the fan operation.
		• An obstruction has stopped the laser unit CK fan. • Harness disconnected
		1. Check the harness connection to the laser unit CK fan. 2. Replace the laser unit CK fan.

No.	Type	Details (Symptom, Possible Cause, Troubleshooting Procedures)
530 -010	D	Fan alarm 1: CIS cleaning fan
		The machine detects a fan alarm signal from the CIS cleaning fan for 0.1 second during the fan operation.
		• An obstruction has stopped the CIS cleaning fan. • Harness disconnected
		1. Pull out the registration unit drawer and then push it into the machine. 2. Check the harness connection to the CIS cleaning fan. 3. Replace the CIS cleaning fan.

No.	Type	Details (Symptom, Possible Cause, Troubleshooting Procedures)
530 -011	D	Fan alarm 1: Registration unit fan
		The machine detects a fan alarm signal from the registration unit fan for 0.1 second during the fan operation.
		• An obstruction has stopped the registration unit fan. • Harness disconnected
		1. Pull out the registration unit drawer and then push it into the machine. 2. Check the harness connection to the registration unit fan. 3. Replace the registration unit fan.

No.	Type	Details (Symptom, Possible Cause, Troubleshooting Procedures)
530 -012	D	Fan alarm 1: Black PCDU fan
		The machine detects a fan alarm signal from the black PCDU fan for 0.1 second during the fan operation.
		• An obstruction has stopped the black PCDU fan. • Harness disconnected
		1. Check the harness connection to the black PCDU fan. 2. Replace the registration unit fan.

No.	Type	Details (Symptom, Possible Cause, Troubleshooting Procedures)
530 -013	D	Fan alarm 1: Inverter/paper exit fan
		The machine detects a fan alarm signal from the inverter/paper exit fan for 0.1 second during the fan operation.
		• An obstruction has stopped the inverter/paper exit fan. • Harness disconnected
		1. Check the harness connection to the inverter/paper exit fan. 2. Replace the Inverter/paper exit fan.

No.	Type	Details (Symptom, Possible Cause, Troubleshooting Procedures)
530 -014	D	Fan alarm 1: Development unit K fan
-015	D	Fan alarm 1: Development unit C fan
-016	D	Fan alarm 1: Development unit M fan
-017	D	Fan alarm 1: Development unit Y fan
		The machine detects a fan alarm signal from the development unit K, C, M or Y fan for 0.1 second during the fan operation.
		• An obstruction has stopped the development unit K, C, M or Y fan. • Harness disconnected
		1. Check the harness connection to the development unit K, C, M or Y fan. 2. Replace the development unit K, C, M or Y fan.

No.	Type	Details (Symptom, Possible Cause, Troubleshooting Procedures)
530 -018	D	Fan alarm 1: Fusing fan 1
-019	D	Fan alarm 1: Fusing fan 2
-020	D	Fan alarm 1: Fusing fan 3
-021	D	Fan alarm 1: Fusing fan 4
-022	D	Fan alarm 1: Fusing fan 5

No.	Type	Details (Symptom, Possible Cause, Troubleshooting Procedures)
-023	D	Fan alarm 1: Fusing fan 6
		The machine detects a fan alarm signal from fusing unit fan 1, 2, 3, 4, 5 or 6 for 0.1 second during the fan operation.
		• An obstruction has stopped fusing unit fan 1, 2, 3, 4, 5 or 6. • Harness disconnected
		1. Check the harness connection to fusing unit fan 1, 2, 3, 4, 5 or 6. 2. Replace fusing unit fan 1, 2, 3, 4, 5 or 6.

No.	Type	Details (Symptom, Possible Cause, Troubleshooting Procedures)
530 -024	D	Fan alarm 1: Inverter motor fan
		The machine detects a fan alarm signal from the inverter motor fan for 0.1 second during the fan operation.
		• An obstruction has stopped the inverter motor fan. • Harness disconnected
		1. Check the harness connection to the inverter motor fan. 2. Replace the inverter motor fan.

No.	Type	Details (Symptom, Possible Cause, Troubleshooting Procedures)
531 -001	D	Fan alarm 2: Ozone fan K
-002	D	Fan alarm 2: Ozone fan C
-003	D	Fan alarm 2: Ozone fan M
-004	D	Fan alarm 2: Ozone fan Y

No.	Type	Details (Symptom, Possible Cause, Troubleshooting Procedures)
		The machine detects a fan alarm signal from the ozone fan K, C, M or Y for 0.1 second during the fan operation.
		• An obstruction has stopped the ozone fan K, C, M or Y. • Harness disconnected
		1. Check the harness connection to the ozone fan K, C, M or Y. 2. Replace the ozone fan K, C, M or Y.

No.	Type	Details (Symptom, Possible Cause, Troubleshooting Procedures)
531 -005	D	Fan alarm 2: PSU fan 1
-006	D	Fan alarm 2: PSU fan 2
-007	D	Fan alarm 2: PSU fan 3
-008	D	Fan alarm 2: PSU fan 4
		The machine detects a fan alarm signal from PSU fan 1, 2, 3 or 4 for 0.1 second during the fan operation.
		• An obstruction has stopped PSU fan 1, 2, 3 or 4. • Harness disconnected
		1. Check the harness connection to PSU fan 1, 2, 3 or 4. 2. Replace PSU fan 1, 2, 3 or 4.

No.	Type	Details (Symptom, Possible Cause, Troubleshooting Procedures)
531 -009	D	Fan alarm 2: Fusing exhaust fan 1
-010	D	Fan alarm 2: Fusing exhaust fan 2
-011	D	Fan alarm 2: Fusing exhaust fan 3

No.	Type	Details (Symptom, Possible Cause, Troubleshooting Procedures)
		The machine detects a fan alarm signal from fusing exhaust fan 1, 2 or 3 for 0.1 second during the fan operation.
		• An obstruction has stopped fusing exhaust fan 1, 2 or 3. • Harness disconnected
		1. Check the harness connection to fusing exhaust fan 1, 2 or 3. 2. Replace fusing exhaust fan 1, 2 or 3.

No.	Type	Details (Symptom, Possible Cause, Troubleshooting Procedures)
531 -012	D	Fan alarm 2: Controller fan 1
-013	D	Fan alarm 2: Controller fan 2
-014	D	Fan alarm 2: Controller fan 3
-015	D	Fan alarm 2: Controller fan 4
-016	D	Fan alarm 2: Controller fan 5
		The machine detects a fan alarm signal from controller fan 1, 2, 3, 4 or 5 for 0.1 second during the fan operation.
		• An obstruction has stopped controller fan 1, 2, 3, 4 or 5. • Harness disconnected
		1. Check the harness connection to controller fan 1, 2, 3, 4 or 5. 2. Replace controller fan 1, 2, 3, 4 or 5.

No.	Type	Details (Symptom, Possible Cause, Troubleshooting Procedures)
531 -017	D	Fan alarm 2: Plotter cooling fan 1 (Right fan from front view)
-018	D	Fan alarm 2: Plotter cooling fan 2 (Center fan from front view)
-019	D	Fan alarm 2: Plotter cooling fan 3 (Left fan from front view)

No.	Type	Details (Symptom, Possible Cause, Troubleshooting Procedures)
-020	D	Fan alarm 2: Compressor fan 1 (Right fan from front view)
-021	D	Fan alarm 2: Compressor fan 2 (Left fan from front view)
		The machine detects a fan alarm signal from the plotter cooling fan 1, 2, 3, or compressor fan 1 or 2 0.1 second during the fan operation.
		• An obstruction has stopped plotter cooling fan 1, 2, 3, or compressor fan 1 or 2. • Harness disconnected
		1. Check the harness connection to plotter cooling fan 1, 2, 3, or compressor fan 1 or 2. 2. Replace plotter cooling fan 1, 2, 3, or compressor fan 1 or 2.

No.	Type	Details (Symptom, Possible Cause, Troubleshooting Procedures)
532 -001	B	Fan alarm 3: A3 LCT front air assist fan 1
-002	B	Fan alarm 3: A3 LCT rear air assist fan 1
		The machine detects a fan alarm signal from front or rear air assist fan 1 for 0.7 second after the paper exit motor has started rotating for 1 second.
		• An obstruction has stopped front or rear air assist fan 1. • Harness disconnected
		1. Check the harness connection to front or rear air assist fan 1. 2. Replace front or rear air assist fan 1.

No.	Type	Details (Symptom, Possible Cause, Troubleshooting Procedures)
533 -001	B	Fan alarm 4: A3 LCT front air assist fan 2
-002	B	Fan alarm 4: A3 LCT rear air assist fan 2

No.	Type	Details (Symptom, Possible Cause, Troubleshooting Procedures)
		The machine detects a fan alarm signal from front or rear air assist fan 2 for 0.7 second after the paper exit motor has started rotating for 1 second.
		• An obstruction has stopped front or rear air assist fan 2. • Harness disconnected
		1. Check the harness connection to the front or rear air assist fan 2. 2. Replace front or rear air assist fan 2.

No.	Type	Details (Symptom, Possible Cause, Troubleshooting Procedures)
534 -001	B	Fan alarm 5: A3 LCT rear air assist fan 3
-002	B	Fan alarm 5: A3 LCT rear air assist fan 3
		The machine detects a fan alarm signal from front or rear air assist fan 3 for 0.7 second after the paper exit motor has started rotating for 1 second.
		• An obstruction has stopped front or rear air assist fan 3. • Harness disconnected
		1. Check the harness connection to front or rear air assist fan 3. 2. Replace front or rear air assist fan 3.

Service Call Tables - 5-2

SC codes Group 5: Paper Feed

No.	Type	Details (Symptom, Possible Cause, Troubleshooting Procedures)
535 -001	B	Fan alarm 6: A3 LCT rear air assist fan 4
-002	B	Fan alarm 6: A3 LCT rear air assist fan 4
		The machine detects a fan alarm signal from front or rear air assist fan 4 for 0.7 second after the paper exit motor has started rotating for 1 second.
		• An obstruction has stopped front or rear air assist fan 4. • Harness disconnected
		1. Check the harness connection to front or rear air assist fan 4. 2. Replace front or rear air assist fan 4.

No.	Type	Details (Symptom, Possible Cause, Troubleshooting Procedures)
536 -001 to -004	B	Fan alarm 7: Upper and lower cooling fans
		The machine detects a fan alarm signal from the upper cooling fans or lower cooling fans in the buffer pass unit (M379) for 10 seconds during the fan operation.
		• An obstruction has stopped the upper or lower cooling fans. • Harness disconnected
		1. Check and remove the obstruction from the upper or lower cooling fans. 2. Check the harness connection to the upper or lower cooling fans. 3. Replace the upper or lower cooling fans.

No.	Type	Details (Symptom, Possible Cause, Troubleshooting Procedures)
536 -005 to -008	B	Fan alarm 8: Upper and lower exhaust fans
		The machine detects a fan alarm signal from the upper exhaust fans or lower exhaust fans in the buffer pass unit (M379) for 10 seconds during the fan operation.
		• An obstruction has stopped the upper or lower exhaust fans. • Harness disconnected
		1. Check and remove the obstruction from the upper or lower exhaust fans. 2. Check the harness connection to the upper or lower exhaust fans. 3. Replace the upper or lower exhaust fans.

No.	Type	Details (Symptom, Possible Cause, Troubleshooting Procedures)
541	A	Heating roller thermopile error
		The temperature measured by the thermopile does not reach 0°C for 10 seconds.
		• Loose connection of the thermopile • Defective thermopile
		1. Do SP5810 to cancel the SC fusing code. 2. Check if the thermopile is firmly connected. 3. Replace the thermopile.

No.	Type	Details (Symptom, Possible Cause, Troubleshooting Procedures)
542	A	Heating roller warm-up error 1
		• The center temperature of the heating roller does not reach the ready temperature for 830 seconds after the heating lamp on. • The center temperature of the heating roller does not reach 100°C for 400 seconds after the heating roller lamp on.
		Dirty or defective thermopile
		1. Do SP5810 to cancel the SC fusing code. 2. Check if the thermopile is firmly connected. 3. Replace the thermopile.

No.	Type	Details (Symptom, Possible Cause, Troubleshooting Procedures)
543	A	Heating roller overheat 1 (software error)
		The detected fusing temperature (center) stays at 225°C for 10 seconds.
		• TRIAC short, AC drive board defective • Defective IOB 2 • Defective BCU **Note** • Related SC code: SC 553, SC563
		1. Do SP5810 to cancel the SC fusing code. 2. Replace the AC drive board. 3. Replace the IOB 2. 4. Replace the BCU.

No.	Type	Details (Symptom, Possible Cause, Troubleshooting Procedures)
544	A	Heating roller thermopile (center) error 3
		The thermopile detected a temperature over 260°C.
		• TRIAC short, AC drive board defective • Defective IOB 2 • Defective BCU **Note** • Related SC code: SC 553, SC563
		1. Do SP5810 to cancel the SC fusing code. 2. Replace the AC drive board. 3. Replace the IOB 2. 4. Replace the BCU.

No.	Type	Details (Symptom, Possible Cause, Troubleshooting Procedures)
545	A	Heating roller fusing lamp on error
		After fusing belt reached warm-up temperature, the heating roller fusing lamp remained on for 360 sec. while the hot roller was not rotating.
		• Thermopile damaged, or out of position • Fusing lamp disconnected, broken
		1. Do SP5810 to cancel the SC fusing code. 2. Replace the thermopile.

No.	Type	Details (Symptom, Possible Cause, Troubleshooting Procedures)
547	D	Zero cross error
		• The zero cross signal is detected once in the three zero cross signal detections even though the heater relay is off when turning on the main power. • The detection error occurs twice or more in the 10 zero cross signal detections. This error is defined when the detected zero cross signal is less than 44.
		• Defective fusing relay • Defective fusing relay circuit • Shorted +24V fuse on the PSU • Unstable power supply • Defective breaker or breaker off • Defective FIB (+6VGINT off) • Defective AC drive board (Defective power relay) • Defective IOB 2
		1. Check the power supply source. 2. Make sure that the breaker is turned on. 3. Replace the breaker if the breaker is not turned on. 4. Replace the FIB if +6VGINT (CN337-1 on IOB 2) is OFF. 5. Replace the AC drive board. 6. Replace the IOB 2. 7. Replace the +24V fuse on the PSU. 8. Replace the PSU

No.	Type	Details (Symptom, Possible Cause, Troubleshooting Procedures)
551	A	Pressure roller thermistor error
		The temperature measured by the pressure roller thermistor does not reach 0°C for 120 seconds.
		• Loose connection of pressure roller thermistor • Defective pressure roller thermistor **Note** • Related SC code: SC 541, SC561
		1. Do SP5810 to cancel the SC fusing code. 2. Check that the pressure roller thermistor is firmly connected. 3. Replace the pressure roller thermistor.

No.	Type	Details (Symptom, Possible Cause, Troubleshooting Procedures)
552	A	Pressure roller warm-up error 2
		• The pressure roller temperature does not reach the ready temperature for 1600 seconds after the heating lamp on. • The pressure roller temperature does not reach 100°C for 700 seconds after the pressure roller lamp on.
		• Defective thermistor **Note** • Related SC code: SC 542, SC562
		1. Do SP5810 to cancel the SC fusing code. 2. Check if the pressure roller thermistor is firmly connected. 3. Replace the pressure roller thermistor.

No.	Type	Details (Symptom, Possible Cause, Troubleshooting Procedures)
553	A	Pressure roller overheat (software error)
		The detected pressure roller temperature stays at 215°C or more for 10 seconds.
		• TRIAC short, AC drive board defective • Defective IOB 2 • Defective BCU **Note** • Related SC code: SC 543, SC563
		1. Do SP5810 to cancel the SC fusing code. 2. Replace the AC drive board. 3. Replace the IOB 2. 4. Replace the BCU.

No.	Type	Details (Symptom, Possible Cause, Troubleshooting Procedures)
555	A	Pressure roller fusing lamp remains on
		After hot roller reaches warm-up temperature, the pressure roller fusing lamp remained for 360 sec. while the hot roller is not rotating.
		Thermistor damaged, or out of position
		1. Do SP5810 to cancel the SC fusing code. 2. Replace the pressure roller thermistor.

No.	Type	Details (Symptom, Possible Cause, Troubleshooting Procedures)
557	C	Zero cross frequency error
		The detection error occurs twice or more in the 10 zero cross signal detections. This error is defined when the detected zero cross signal is less than 44.
		• Noise (High frequency)
		Check the power supply source.

No.	Type	Details (Symptom, Possible Cause, Troubleshooting Procedures)
559	A	Consecutive fusing jam
		The paper jam counter for the fusing unit reaches 3 times. The paper jam counter is cleared if the paper is fed correctly. This SC is activated only when SP1159-001 is set to "1" (default "0").
		• Paper jam in the fusing unit.
		Remove the paper that is jammed in the fusing unit. Then make sure that the fusing unit is clean and has no obstacles in the paper feed path.

No.	Type	Details (Symptom, Possible Cause, Troubleshooting Procedures)
561	A	Heating roller thermistor error (end)
		The temperature measured by the heating roller thermistor does not reach 0°C after 45 sec. and remains over this temperature for 10 readings.
		• Loose connection of the heating roller thermistor • Defective heating roller thermistor
		Replace the heating roller thermistor.

No.	Type	Details (Symptom, Possible Cause, Troubleshooting Procedures)
562	A	Heating roller warm-up error 3
		• The heating roller temperature does not reach the ready temperature for 850 seconds after the heating roller lamp on. • The heating roller temperature does not reach 100°C for 400 seconds after the heating roller lamp on.
		• Defective thermistor **Note** • Related SC code: SC 542, SC552
		1. Check if the heating roller thermistor is firmly connected. 2. Replace the heating roller thermistor.

No.	Type	Details (Symptom, Possible Cause, Troubleshooting Procedures)
563	A	Heating roller overheat 2 (software error)
		The detected heating roller temperature (end) stays at 225°C or more for 10 seconds.
		• Defective AC drive board • Defective IOB 2 • Defective BCU **Note** • Related SC code: SC 543, SC553
		1. Do SP5810 to cancel the SC fusing code. 2. Replace the AC drive board. 3. Replace the IOB 2. 4. Replace the BCU.

No.	Type	Details (Symptom, Possible Cause, Troubleshooting Procedures)
569	D	Pressure roller lift error
		Pressure roller lift motor not operating correctly. (No signal to indicate completion of operation.)
		• Pressure roller lift motor defective • Pressure roller lift sensor connection loose, broken, damaged Pressure roller lift motor blocked by an obstruction
		1. Replace the pressure roller lift motor. 2. Replace the pressure roller lift sensor.

No.	Type	Details (Symptom, Possible Cause, Troubleshooting Procedures)
571	A	Fusing roller thermistor error (Fusing roller thermistor)
		The core temperature of the hot roller does not reach 0 degrees Celsius for 2100 seconds.
		• Defective fusing roller thermistor • Loose connection of the fusing roller thermistor
		• Do SP5810 to cancel the SC fusing code. Turn the main power off, and then on. • Check if the fusing roller thermistor is firmly connected. • Replace the fusing roller thermistor.

No.	Type	Details (Symptom, Possible Cause, Troubleshooting Procedures)
572	A	Hot roller warm-up error (Fusing roller thermistor)
		• The core temperature of the hot roller does not reach 45 degrees Celsius for 2100 seconds after the hot roller lamp turned on. • The core temperature of the hot roller does not reach the warm-up temperature for 4000 seconds after the hot roller lamp turned on.
		• Defective (deformed) fusing roller thermistor • Loose connection of the fusing lamps
		• Do SP5810 to cancel the SC fusing code. Turn the main power off, and then on. • Check the appearance of the fusing roller thermistor for any anomalies and the input voltage. • Check if the fusing lamps are firmly connected. • Replace the fusing roller thermistor. • Replace the thermostat.

No.	Type	Details (Symptom, Possible Cause, Troubleshooting Procedures)
576	A	Fusing belt thermistor error (Fusing belt thermistor)
		The temperature of fusing belt does not reach 0 degrees Celsius for 135 seconds.
		• Defective fusing belt thermistor • Loose connection of the fusing belt thermistor
		• Do SP5810 to cancel the SC fusing code. Turn the main power off, and then on. • Check if the fusing belt thermistor is firmly connected. • Replace the fusing belt thermistor.

No.	Type	Details (Symptom, Possible Cause, Troubleshooting Procedures)
577	A	Hot roller warm-up error (Fusing belt thermistor)
		• The temperature of the fusing belt does not reach 90 degrees Celsius for 306 seconds after the hot roller lamp turned on. • The temperature of the fusing belt does not reach the "warm-up temperature – 35 degrees Celsius (SP correlated value)" when a) the pressure roller reaches its target core and surface temperatures, and b) the time for warm-up has elapsed.
		• Defective (deformed) fusing belt thermistor • Loose connection of the fusing lamps
		• Do SP5810 to cancel the SC fusing code. Turn the main power off, and then on. • Check the appearance of the fusing belt thermistor for any anomalies and the input voltage. • Check if the fusing lamps are firmly connected. • Replace the fusing belt thermistor. • Replace the thermostat.

No.	Type	Details (Symptom, Possible Cause, Troubleshooting Procedures)
584	A	De-curler unit HP detection error
		The de-curler unit HP sensor does not detect a home position for 6 seconds after the de-curler unit has tried to search for its home position.
		• De-curler unit HP sensor connection loose or disconnected • De-curler unit HP sensor defective
		1. Check the connection of the de-curler unit HP sensor. 2. Replace the de-curler unit HP sensor.

No.	Type	Details (Symptom, Possible Cause, Troubleshooting Procedures)
585	C	Double-feed led adjustment error
		The calibration of the double-feed LED for the paper type failed to reach the target voltage.
		• Double-feed sensor: LED and receptor dirty • Sensor: LED and receptor connectors loose, broken, defective
		1. Check the connection of the double-feed sensor: LED and Receptor. 2. Replace the double-feed sensor: LED and Receptor.

No.	Type	Details (Symptom, Possible Cause, Troubleshooting Procedures)
586	A	De-curler limit sensor error
		• The de-curler unit moves beyond the regulated range. • The de-curler limit sensor does not detect any signal.
		• De-curler unit HP sensor connection loose or disconnected • De-curler unit HP sensor defective • De-curler unit limit sensor connection loose or disconnected • De-curler unit limit sensor defective
		1. Check the connection of the de-curler unit HP sensor. 2. Replace the de-curler unit HP sensor. 3. Check the connection of the de-curler unit limit sensor. 4. Replace the de-curler unit limit sensor.

No.	Type	Details (Symptom, Possible Cause, Troubleshooting Procedures)
590 -001	C	Paper feed motor 1 error
-002	C	Paper feed motor 2 error
		The machine detects a short or open signal of the coil in paper feed motor 1 or 2.
		• Harness from IOB 2 to this motor short, broken or disconnected • Coil in one of these motors short or open
		1. Check the harness connection. 2. Replace the harness. 3. Replace paper feed motor 1 or 2.

No.	Type	Details (Symptom, Possible Cause, Troubleshooting Procedures)
590 -003	C	Grip motor 1 error
-004	C	Grip motor 2 error
-005	C	Grip motor 3 error
		The machine detects a short or open signal of the coil in grip motor 1, 2 or 3.
		• Harness from IOB 2 to this motor short, broken or disconnected • Coil in one of these motors short or open
		1. Check the harness connection. 2. Replace the harness. 3. Replace grip motor 1, 2 or 3.

No.	Type	Details (Symptom, Possible Cause, Troubleshooting Procedures)
590 -006	C	Pressure roller lift motor error
		The machine detects a short or open signal of the coil in the pressure roller lift motor.
		• Harness from IOB 2 to this motor short, broken or disconnected • Coil in this motor short or open
		1. Check the harness connection. 2. Replace the harness. 3. Replace the pressure roller lift motor.

No.	Type	Details (Symptom, Possible Cause, Troubleshooting Procedures)
590 -008	C	De-curler feed motor error
		The machine detects a short or open signal of the coil in the de-curler feed motor.
		• Harness from IOB 2 to this motor short, broken or disconnected • Coil in this motor short or open
		1. Check the harness connection. 2. Replace the harness. 3. Replace the de-curler feed motor.

No.	Type	Details (Symptom, Possible Cause, Troubleshooting Procedures)
590 -009	C	De-curler unit motor error
		The machine detects a short or open signal of the coil in the de-curler unit motor.
		• Harness from IOB 2 to this motor short, broken or disconnected • Coil in this motor short or open
		1. Check the harness connection. 2. Replace the harness. 3. Replace the de-curler unit motor.

No.	Type	Details (Symptom, Possible Cause, Troubleshooting Procedures)
590 -010	C	Registration entrance motor error
		The machine detects a short or open signal of the coil in the registration entrance motor.
		• Harness from RCB to this motor short, broken or disconnected • Coil in this motor short or open
		1. Check the harness connection. 2. Replace the harness. 3. Replace the registration entrance motor.

No.	Type	Details (Symptom, Possible Cause, Troubleshooting Procedures)
590 -011	C	Registration timing motor error
		The machine detects a short or open signal of the coil in the registration timing motor.
		• Harness from RCB to this motor short, broken or disconnected • Coil in this motor short or open
		1. Check the harness connection. 2. Replace the harness. 3. Replace the registration timing motor.

No.	Type	Details (Symptom, Possible Cause, Troubleshooting Procedures)
590 -012	C	Shift roller motor error
		The machine detects a short or open signal of the coil in the shift roller motor.
		• Harness from RCB to this motor short, broken or disconnected • Coil in this motor short or open
		1. Check the harness connection. 2. Replace the harness. 3. Replace the shift roller motor.

No.	Type	Details (Symptom, Possible Cause, Troubleshooting Procedures)
590 -013	C	PTR timing motor error
		The machine detects a short or open signal of the coil in the PTR timing motor.
		• Harness from RCB to this motor short, broken or disconnected • Coil in this motor short or open
		1. Check the harness connection. 2. Replace the harness. 3. Replace the PTR timing motor.

No.	Type	Details (Symptom, Possible Cause, Troubleshooting Procedures)
590 -014	C	Shift roller unit motor error
		The machine detects a short or open signal of the coil in the shift roller unit motor.
		• Harness from RCB to this motor short, broken or disconnected • Coil in this motor short or open
		1. Check the harness connection. 2. Replace the harness. 3. Replace the shift roller unit motor.

No.	Type	Details (Symptom, Possible Cause, Troubleshooting Procedures)
590 -015	C	Registration gate motor
		The machine detects a short or open signal of the coil in the registration gate unit motor.
		• Harness from RCB to this motor short, broken or disconnected • Coil in this motor short or open
		1. Check the harness connection. 2. Replace the harness. 3. Replace the registration gate motor.

No.	Type	Details (Symptom, Possible Cause, Troubleshooting Procedures)
590 -016	C	Duplex transport motor 2 error
		The machine detects a short or open signal of the coil in the duplex transport motor 2.
		• Harness from RCB to this motor short, broken or disconnected • Coil in this motor short or open
		1. Check the harness connection. 2. Replace the harness. 3. Replace the duplex transport motor 2.

No.	Type	Details (Symptom, Possible Cause, Troubleshooting Procedures)
590 -017	C	Inverter motor error
		The machine detects a short or open signal of the coil in the inverter motor.
		• Harness from PDB to this motor short, broken or disconnected • Coil in this motor short or open
		1. Check the harness connection. 2. Replace the harness. 3. Replace the inverter motor.

No.	Type	Details (Symptom, Possible Cause, Troubleshooting Procedures)
590 -018	C	Switchback motor error
		The machine detects a short or open signal of the coil in the switchback motor.
		• Harness from PDB to this motor short, broken or disconnected • Coil in this motor short or open
		1. Check the harness connection. 2. Replace the harness. 3. Replace the switchback motor.

No.	Type	Details (Symptom, Possible Cause, Troubleshooting Procedures)
590 -019	C	Duplex transport motor 1 error
		The machine detects a short or open signal of the coil in the duplex transport motor 1.
		• Harness from PDB to this motor short, broken or disconnected • Coil in this motor short or open
		1. Check the harness connection. 2. Replace the harness. 3. Replace the duplex transport motor 1.

No.	Type	Details (Symptom, Possible Cause, Troubleshooting Procedures)
590 -020	C	PTB motor error
		The machine detects a short or open signal of the coil in the PTB motor.
		• Harness from PDB to this motor short, broken or disconnected • Coil in this motor short or open
		1. Check the harness connection. 2. Replace the harness. 3. Replace the PTB motor.

No.	Type	Details (Symptom, Possible Cause, Troubleshooting Procedures)
590 -021	D	Inverter motor error
		The machine detects a short or open signal of the inverter motor, or the safety function went off to prevent temperature rise.
		• Harness from PDB to this motor short or disconnected • Coil in this motor short or open • Relay connector between PDB and this motor disconnected • PDB board defect
		• Turn machine power Off and On either by the main power switch or the power button on the control panel. • Replace the PDB motor. • Check the harness connection. Replace the harness if damaged. • Replace the PDB board.

Service Call Tables - 6

SC Codes Group 6: Device Communication

No.	Type	Details (Symptom, Possible Cause, Troubleshooting Procedures)
SC601	B	Communication Error between BCU and MCU **(D095 only)**
		One or more of the following occurred: • The BCU cannot communicate with the MCU (LCT-MF) within 100 ms after power on after 3 tries. • A BREAK signal was detected after connection between the BCU and MCU. • After a communication error, three tries to communicate with the MCU failed.
		• Poor connection between BCU and MCU • BCU defective • MCU defective
		1. Check or replace the harness between the BCU and MCU. 2. Replace the BCU. 3. Replace the MCU in the LCT-MF.

No.	Type	Details (Symptom, Possible Cause, Troubleshooting Procedures)
610	D	Mechanical counter error: K
611	D	Mechanical counter error: FC
-	-	This SC is only for NA models. The machine detects the mechanical counter error.
		• Disconnected mechanical counter • Defective mechanical counter
		Check or replace the mechanical counter.

No.	Type	Details (Symptom, Possible Cause, Troubleshooting Procedures)

620	B	ADF Communication Error **(D095 only)**
		No response from the ADF to the ACK signal issued by the IPU.
		• Poor connection between the IPU and ADF • Electrical noise interfering with communication between electrical components • ADF cable or connector loose, broken, defective • ADF defective • IPU defective
		1. Check or replace the cable between IPU and ADF. 2. Replace the ADF. 3. Replace the IPU.

No.	Type	Details (Symptom, Possible Cause, Troubleshooting Procedures)
621	D	Finisher communication error
-	-	While the IOB 2 communicates with an optional unit, an SC code is displayed if the IOB 2 receives the break signal which is generated by the peripherals only just after the main switch is turned on.
		• Finisher I/F cable problems • Finisher main board problems • IOB 2 problems • BCU problems
		1. Check if the finisher I/F cables are correctly connected. 2. Replace the main board of the finisher where you think the problem is occurring. 3. Replace the IOB 2. 4. Replace the BCU.

No.	Type	Details (Symptom, Possible Cause, Troubleshooting Procedures)
622	D	1st LCT communication error
623	D	2nd LCT communication error

No.	Type	Details (Symptom, Possible Cause, Troubleshooting Procedures)
-	-	While the IOB 2 communicates with an optional unit, an SC code is displayed if the IOB 2 receives the break signal which is generated by the peripherals only just after the main switch is turned on.
		• LCT I/F cable problems • LCT main board problems • IOB 2 problems • BCU problems
		1. Check if the LCT I/F cable is correctly connected. 2. Replace the main board of the LCT. 3. Replace the IOB 2. 4. Replace the BCU.

No.	Type	Details (Symptom, Possible Cause, Troubleshooting Procedures)
625	D	RCB module version error
		The RCB module version in the main machine does not match the one in the LCT.
		• Incorrect registration unit installed
		Install the correct registration unit.

No.	Type	Details (Symptom, Possible Cause, Troubleshooting Procedures)
626	D	BCU-RCB communication error
		The IOB 1 does not receive an OK signal from RCB for a certain time after sending a command to it and the IOB 1 still does not receive an OK signal after sending the command 3 times.
		• Registration drawer connection defective • Disconnected harness between IOB 1 and RCB • RCB software not installed correctly • Defective IOB 1 • Defective RCB
		1. Check the connection between the above devices. 2. Replace the RCB. 3. Replace the IOB 1.

No.	Type	Details (Symptom, Possible Cause, Troubleshooting Procedures)
632	CTL B	Counter device error 1
		After 3 attempts to send a data frame to the optional counter device via the serial communication line, no ACK signal was received within 100 ms.
		• Serial line between the optional counter device, the relay board and copier control board is disconnected or damaged • Make sure that SP5113 is set to enable the optional counter device.

No.	Type	Details (Symptom, Possible Cause, Troubleshooting Procedures)
633	CTL B	Counter device error 2
		After communication is established, the controller receives the break signal from the accounting device.
		• Serial line between the optional counter device, the relay board and copier control board is disconnected or damaged • Make sure that SP5113 is set to enable the optional counter device.

No.	Type	Details (Symptom, Possible Cause, Troubleshooting Procedures)
634	CTL B	Counter device error 3
		A backup RAM error was returned by the counter device.
		• Counter device control board defective • Backup battery of counter device defective

No.	Type	Details (Symptom, Possible Cause, Troubleshooting Procedures)
635	CTL B	Counter device error 4
		A backup battery error was returned by the counter device.
		• Counter device control board defective • Backup battery of counter device defective

No.	Type	Details (Symptom, Possible Cause, Troubleshooting Procedures)
636	-	-
-001	-	SD Card Error
		Expanded authentication module error
		1. Install the expanded authentication module 2. Install the SD Card 3. Install the DESS module
-002	-	Improper IC module version
		Improper version of IC module is used.
		Re-install IC module
-099	-	Error in software
		Improper certification information accumulates inside software.
		Turn off and on the main power

No.	Type	Details (Symptom, Possible Cause, Troubleshooting Procedures)
641	CTL D	BCU control data transfer abnormal
		A sampling of the control data sent from the BCU reveals an abnormality.
		• Controller board defective • External noise • BCU board defective
		1. Replace the controller board. 2. Replace the BCU board.

No.	Type	Details (Symptom, Possible Cause, Troubleshooting Procedures)
650		Communication error of the remote service modem (Embedded RCG-M)
-001	CTL B	Authentication error
		The authentication for the Embedded RCG-M fails at a dial up connection.
		• Incorrect SP settings • Disconnected telephone line • Disconnected modem board Check and set the correct user name (SP5816-156) and password (SP5816-157).
-004	CTL B	Incorrect modem setting
		Dial up fails due to the incorrect modem setting.
		• Same as -001 Check and set the correct AT command (SP5816-160).
-005	-	Communication line error
		The supplied voltage is not sufficient due to a defective communication line or defective connection.
		• Same as -001 Consult with the user's local telephone company.

No.	Type	Details (Symptom, Possible Cause, Troubleshooting Procedures)
-011	-	Incorrect network setting
		Both the NIC and Embedded RCG-M are activated at the same time.
		• Same as -001 Disable the NIC with SP5985-1.
-012	-	Modem board error
		The modem board does not work properly even though the setting of the modem board is installed with a dial up connection.
		• Same as -001 1. Install the modem board. 2. Check and reset the modem board setting with SP5816. 3. Replace the modem board.

No.	Type	Details (Symptom, Possible Cause, Troubleshooting Procedures)
651		Incorrect dial up connection
-001	CTL C	Program parameter error
-002	CTL C	Program execution error
		An unexpected error occurs when the modem (Embedded RCG-M) tries to call the center with a dial up connection.
		• Caused by a software bug

No.	Type	Details (Symptom, Possible Cause, Troubleshooting Procedures)
660	D	Timer error
		The machine fails to read the internal timer.
		• Defective engine firmware
		Update the engine firmware to the latest version.

No.	Type	Details (Symptom, Possible Cause, Troubleshooting Procedures)
661	D	Engine start up: Time out error
		The image processing check after machine power on does not complete after 10 seconds.
		• Incorrect timing adjustment SP settings • Image processing cannot be controlled.
		Input the correct settings for the timing adjustment SP codes.

No.	Type	Details (Symptom, Possible Cause, Troubleshooting Procedures)
662	A	Slave CPU error
		The slave CPU does not send a clear signal for the watchdog timer for the specified time (408 - 1496 ms.).
		• Slave CPU out of control
		Update the engine firmware to the latest version firmware.

No.	Type	Details (Symptom, Possible Cause, Troubleshooting Procedures)
663	D	CPU communication error
		The communication between the master and slave CPU on the BCU does not complete after 100 msec.
		• Defective engine firmware • Defective DP-RAM
		1. Update the engine firmware to the latest version. 2. Replace the BCU.

No.	Type	Details (Symptom, Possible Cause, Troubleshooting Procedures)
670	CTL D	Engine start up error
		The ready signal from the engine board is not detected.
		• Defective engine board.
		Replace the engine board.

No.	Type	Details (Symptom, Possible Cause, Troubleshooting Procedures)
671	CTL D	Engine board mismatch error
		Engine board and controller mismatch detected.
		• Wrong engine board installed. • Wrong controller board installed. • Check the type of engine board and controller board.
		1. Replace the BCU. 2. Replace the controller board.

No.	Type	Details (Symptom, Possible Cause, Troubleshooting Procedures)
672	CTL D	Controller-to-operation panel communication error at startup
		After powering on the machine, the communication circuit between the controller and the operation panel is not opened, or communication with controller is interrupted after a normal startup.
		• Controller stall • Controller board installed incorrectly • Controller board defective • Operation panel connector loose or defective
		1. Check the harness connection. 2. Replace the controller board.

No.	Type	Details (Symptom, Possible Cause, Troubleshooting Procedures)
674		Board Power Error-1

No.	Type	Details (Symptom, Possible Cause, Troubleshooting Procedures)
-001	D	PSU-EA1 ch1: 24V power off error
		The machine detects 24 V power off from the PSU-EA1.
		• Harness broken or disconnected • Interlock signal from IOB 2 detected • RB defective • PSU-EA1 defective
		1. Check or replace the harness. 2. Replace the PSU-EA1. 3. Replace the RB.
-002	D	IOB 1: 24V_1AINT power off error 1
		The machine detects 24 V power off from the IOB 1.
		• PSU-EA1 defective • FU203 on the IOB 1 shorted or opened
		1. Replace the IOB 1. 2. Check or replace the PSU-EA1.
-003	D	IOB 1: 24V_1AINT power off error 1
		The machine detects 24 V power off from the IOB 1.
		• PSU-EA1 defective • FU210 on the IOB 1 shorted or opened
		1. Replace the IOB 1. 1. Check or replace the PSU-EA1.

No.	Type	Details (Symptom, Possible Cause, Troubleshooting Procedures)
675		Board Power Error-2

No.	Type	Details (Symptom, Possible Cause, Troubleshooting Procedures)
-001	D	PSU-EA1 ch2: 24V power off error
		The machine detects 24 V power off from the PSU-EA1.
		• Harness broken or disconnected • Interlock signal from IOB 2 detected • RB defective • PSU-EA1 defective
		1. Check or replace the harness. 2. Replace the PSU-EA1. 3. Replace the RB.
-002	D	IOB 1: 24V_2AINT power off error
		The machine detects 24 V power off from the IOB 1.
		• PSU-EA1 defective • FU105 on the IOB 1 shorted or opened
		1. Replace the IOB 1. 2. Check or replace the PSU-EA1.
-003	D	IOB 1: 24V_2BINT power off error
		The machine detects 24 V power off from the IOB 1.
		• PSU-EA1 defective • FU104 on the IOB 1 shorted or opened
		1. Replace the IOB 1. 2. Check or replace the PSU-EA1.

No.	Type	Details (Symptom, Possible Cause, Troubleshooting Procedures)
-004	D	RCB: 24V_2BINT power off error
		The machine detects 24 V power off from the RCB.
		• PSU-EA1 defective • IOB 1 defective • Registration unit disconnected
		1. Check the registration unit connection. 2. Replace the IOB 1. 3. Check or replace the PSU-EA1.
-005	D	IOB 1: 24VINT power off error
		The machine detects 24 V power off from the IOB 1.
		• PSU-EA1 defective
		Check or replace the PSU-EA1.
-006	D	IOB 1: 24VINTA power off error
		The machine detects 24 V power off from the IOB 1.
		• PSU-EA1 defective • IOB 1 defective • FU104 on the IOB 1 shorted or opened
		1. Replace the IOB 1. 2. Check or replace the PSU-EA1.
-007	D	RCB: 24VINTA1 power off error
		The machine detects 24 V power off from the RCB.
		• Registration unit disconnected • PSU-EA1 defective • IOB 1 defective
		1. Check the registration unit connection. 2. Replace the IOB 1. 3. Check or replace the PSU-EA1.

No.	Type	Details (Symptom, Possible Cause, Troubleshooting Procedures)
-008	D	RCB: 24VINTA2 power off error
		The machine detects 24 V power off from the RCB.
		• Registration unit disconnected • PSU-EA1 defective • IOB 1 defective
		1. Check the registration unit connection. 2. Replace the IOB 1. 3. Check or replace the PSU-EA1.
-009	D	IOB 2: 24VINT power off error
		The machine detects 24 V power off from the IOB 2.
		• PSU-EA1 defective
		Check or replace the PSU-EA1.
-010	D	IOB 2: 24VINTA
		The machine detects 24 V power off from the IOB 2.
		• PSU-EA1 defective • FU101 on the IOB 2 shorted or opened
		1. Replace the IOB 2. 2. Check or replace the PSU-EA1.

No.	Type	Details (Symptom, Possible Cause, Troubleshooting Procedures)
676		Board Power Error-3
-001	D	PSU-EA1: 24V_ch3 power off error
		The machine detects 24 V power off from the PSU-EA1.
		• Harness broken or disconnected • PSU-EA1 defective
		1. Check or replace the harness. 2. Replace the PSU-EA1.

No.	Type	Details (Symptom, Possible Cause, Troubleshooting Procedures)
-002	D	IOB 2: 24V_3A power off error
		The machine detects 24 V power off from the IOB 2.
		• PSU-EA1 defective • FU103 on the IOB 1 shorted or opened
		1. Replace the IOB 1. 2. Check or replace the PSU-EA1.
-003	D	IOB 2: 24V_3B power off error
		The machine detects 24 V power off from the IOB 2.
		• PSU-EA1 defective • FU102 on the IOB 1 shorted or opened
		1. Replace the IOB 1. 2. Check or replace the PSU-EA1.
-004	D	IOB 2: 24V_3C power off error
		The machine detects 24 V power off from the IOB 2.
		• PSU-EA1 defective • FU104 on the IOB 1 shorted or opened
		1. Replace the IOB 1. 2. Check or replace the PSU-EA1.

No.	Type	Details (Symptom, Possible Cause, Troubleshooting Procedures)
677		Board Power Error-4
-001	D	PSU-EA1: 24V_ch4 power off error
		The machine detects 24 V power off from the PSU-EA1.
		• Harness broken or disconnected • PSU-EA1 defective
		1. Check or replace the harness. 2. Replace the PSU-EA1.

No.	Type	Details (Symptom, Possible Cause, Troubleshooting Procedures)
-002	D	IOB 1: 24V_3A power off error
		The machine detects 24 V power off from the IOB 1.
		• PSU-EA2 defective • FU106 on the IOB 1 shorted or opened
		1. Replace the IOB 1. 2. Check or replace the PSU-EA2.
-003	D	IOB 1: 24V_3B power off error
		The machine detects 24 V power off from the IOB 1.
		• PSU-EA2 defective • FU107 on the IOB 1 shorted or opened
		1. Replace the IOB 1. 2. Check or replace the PSU-EA2.
-004	D	IOB 1: TSNS_VCC power off error
		The machine detects TSNS_VCC power off from the IOB 1.
		• PSU-EA2 defective • FU104 on the IOB 1 shorted or opened • IOB 1 defective
		1. Replace the IOB 1. 2. Check or replace the PSU-EA2.

No.	Type	Details (Symptom, Possible Cause, Troubleshooting Procedures)
678		Board Power Error-5

No.	Type	Details (Symptom, Possible Cause, Troubleshooting Procedures)
-001	D	CTB_+24V_off error
		The machine detects 24 V power off for 1 second from the PSU in the buffer pass unit after +24V power was turned on.
		• Harness disconnected or broken • PSU (Buffer Pass Unit) defective • Main board (Buffer Pass Unit) defective • Shortage due to overload on the motor or fan • Fuse tripped or defective
		1. Check or replace the harnesses to the PSU in the buffer pass unit. 2. Replace the PSU in the buffer pass unit. 3. Replace the main board in the buffer pass unit. 4. Remove any obstacle to the motor or fan or replace the motor or fan. 5. Check or replace the fuses on the PSU.
-002	D	CTB_+24VINT_off error
		The machine detects 24 V power off for 1 second from the PSU in the buffer pass unit after +24V power was turned off and front doors have been closed.
		• Harness disconnected or broken • PSU (Buffer Pass Unit) defective • Main board (Buffer Pass Unit) defective
		1. Check or replace the harnesses to the PSU in the buffer pass unit. 2. Replace the PSU in the buffer pass unit. 3. Replace the main board in the buffer pass unit.

No.	Type	Details (Symptom, Possible Cause, Troubleshooting Procedures)
681	D	Communication error: Toner cartridge and RFID

No.	Type	Details (Symptom, Possible Cause, Troubleshooting Procedures)
-001	-	• The machine detects a communication error between the toner cartridge and RFID at starting the communication. • The machine cannot recover the communication between the toner cartridge and RFID after the third communication retry.
		• RFID defective • ASAP I/F disconnected • Incorrect communication due to noise • ID chip defective or not installed in a toner cartridge
-001 to -005	-	1. Check the harness connection. 2. Replace the IOB 1. 3. Replace the RFID.
-011 to -014	-	1. Check if the toner bottle is correctly installed in the machine. 2. Install the correct toner bottle in the machine. The suffix number of the SC code indicates the following: -011: K, -012: C, -013: M, -014: Y
-015 to -018	-	Replace the RFID. The suffix number of the SC code indicates the following: -015: K, -016: C, -017: M, -018: Y
-019 to -030	-	No action except turning off and on is required. The suffix number of the SC code indicates the following: -019/-023/-027: K, -020/-024/-028: C, -021/-025/-029: M, -022/-026/-030: Y
-031 to -046	-	Replace the toner bottle. The suffix number of the SC code indicates the following: -031/-035/-039/-043: K, -032/-036/-040/-044: C, -033/-037/-041/-045: M, -034/-038/-042/-046: Y
-047 to -054	-	No action except turning off and on is required. The suffix number of the SC code indicates the following: -047/-051: K, -048/-052: C, -049/-053: M, -050/-054: Y

No.	Type	Details (Symptom, Possible Cause, Troubleshooting Procedures)
683	C	Toner bottle checking error: Toner cartridge and RFID
-035 To -045	-	The machine detects a communication error between the toner cartridge and RFID at checking the toner bottles even though no toner bottle is installed in the machine.
		• Incorrect communication due to noise • ID chip defective or not installed in a toner cartridge
		1. Check if the ID chip on the toner bottle is installed. 2. Install the correct toner bottle in the machine. The suffix number of the SC code indicates the following: -035/-039/-043: K, -036/-040/-044: C, -037/-041/-045: M, -038/-042/-045: Y

No.	Type	Details (Symptom, Possible Cause, Troubleshooting Procedures)
686	D	BCU-IPU communication error
		The BCU detects a communication error with the IPU three times consecutively.
		• BCU defective • IPU defective • I/F cable disconnected or broken
		1. Replace the BCU. 2. Replace the IPU. 3. Replace the I/F cable between BCU and IPU.

Service Call Tables - 7-1

SC Codes Group 7: Peripherals

No.	Type	Details (Symptom, Possible Cause, Troubleshooting Procedures)
701	B	ADF Pickup Roller Release Malfunction **(D095 only)**
		The pick-up roller HP sensor does not activate or de-activate when the pick-up motor turns on.
		• HP sensor connector, harness loose, broken, defective • Pick-up motor connector, harness loose, broken defective • Pick-up roller HP sensor defective • Pick-up motor defective • ADF main control board defective
		1. Check the harness connections. 2. Replace the pick-up roller HP sensor. 3. Replace the pick-up motor. 4. Replace the main board of the ADF.

No.	Type	Details (Symptom, Possible Cause, Troubleshooting Procedures)
702	B	ADF Feed-In Motor Error **(D095 only)**
		While the feed motor is operating, the encoder pulse signal is not received within the specified time, or the paper size length encoder signal cannot be detected within the specified time (the encoder is built into the feed-in motor).
		• Feed-in motor connector, harness loose, broken, defective • Paper length sensor connector, harness loose, broken, defective • Feed-in motor defective • Paper length sensor or encoder is defective • ADF main control board defective
		1. Check the harness connections. 2. Replace the feed-in motor. 3. Replace the paper length sensor. 4. Replace the main board of the ADF.

No.	Type	Details (Symptom, Possible Cause, Troubleshooting Procedures)
703	B	ADF Transport Belt Motor Error **(D095 only)**
		The encoder pulse signal did not change within 100 ms after 3 attempts to detect any change, causing a "P1" jam error.
		• Transport belt motor defective • Poor connection between the transport motor and ADF main board • ADF main board defective
		1. Replace the transport belt motor. 2. Check or replace the harness connections. 3. Replace the transport belt motor.

No.	Type	Details (Symptom, Possible Cause, Troubleshooting Procedures)
704	B	ADF Feed-Out Motor Error **(D095 only)**
		The encoder pulse signal did not change within 80 ms after 3 attempts to detect any change, causing a "P2 jam error.
		• Feed-out motor defective • Poor connection between the feed-out motor and ADF main board • ADF main control board defective
		1. Replace the feed-out motor. 2. Check or replace the harness connections. 3. Replace the ADF main control board.

No.	Type	Details (Symptom, Possible Cause, Troubleshooting Procedures)
705	B	ADF Original Table Lift Malfunction **(D095 only)**
		One of the following conditions was detected. • The bottom plate position sensor did not activate when the bottom plate motor lifted the original table. • The bottom plate HP sensor did not activate when the bottom plate motor lowered the original table.
		• Bottom plate position sensor defective • Bottom plate HP sensor defective • Bottom plate motor defective • ADF main control board defective
		1. Replace the bottom plate position sensor. 2. Replace the bottom plate HP sensor. 3. Replace the bottom plate motor 4. Replace the ADF main control board.

No.	Type	Details (Symptom, Possible Cause, Troubleshooting Procedures)
720	D	Finisher (B830) upper transport motor error
		No encoder pulse signal is detected for the transport motor within the prescribed time. The 1st failure causes this SC code.
		• Upper transport motor disconnected, defective • Finisher connection to transport motor loose, defective • Upper transport motor defective • Finisher main board defective
		1. Check the harness of the upper transport motor. 2. Replace the upper transport motor. 3. Replace the main board of the finisher (B830).

No.	Type	Details (Symptom, Possible Cause, Troubleshooting Procedures)
720 -01	D	Finisher (D453): Entrance roller motor error
-02	D	Finisher (D453): Proof tray vertical motor error
-03	D	Finisher (D453): Horizontal roller motor error
-04	D	Finisher (D453): Registration motor error
		The motor driver for each motor detects short or open signal from each motor.
		• Motor disconnected, defective • Motor overloaded due to obstruction
		1. Check and remove obstruction to the target motor. 2. Check the harness connections. 3. Replace the target motor; entrance roller motor for 720-01, proof tray vertical motor error for 720-02, horizontal roller motor error for 720-03 or registration motor for 720-04.

No.	Type	Details (Symptom, Possible Cause, Troubleshooting Procedures)
721	B	Finisher (B830) jogger motor error

No.	Type	Details (Symptom, Possible Cause, Troubleshooting Procedures)
		The jogger fences move out of the home position but the HP sensor output does not change within the specified number of pulses. The 1st failure causes an original jam message, and the 2nd failure causes this SC code.
		• Jogger HP sensor disconnected, defective • Jogger motor disconnected, defective • Jogger motor overloaded due to obstruction • Finisher main board and jogger motor connection loose, defective • Finisher main board defective
		1. Check and remove obstruction to the jogger motor. 2. Check the harness connections. 3. Replace the jogger HP sensor. 4. Replace the jogger motor. 5. Replace the main board of the finisher (B830).

No.	Type	Details (Symptom, Possible Cause, Troubleshooting Procedures)
721 -01	B	Finisher (D434) jogger motor error: Front
-02	B	Finisher (D434) jogger motor error: Rear
		The jogger fences move out of the home position but the HP sensor output does not change within the specified number of pulses. The 1st failure causes an original jam message, and the 2nd failure causes this SC code.
		• Jogger HP sensor disconnected, defective • Jogger motor disconnected, defective • Jogger motor overloaded due to obstruction • Finisher main board and jogger motor connection loose, defective • Finisher main board defective

No.	Type	Details (Symptom, Possible Cause, Troubleshooting Procedures)
		1. Check and remove obstruction to the jogger motor. 2. Check the harness connections. 3. Replace the jogger HP sensor. 4. Replace the jogger motor. 5. Replace the main board of the finisher (D434).

No.	Type	Details (Symptom, Possible Cause, Troubleshooting Procedures)
723	B	Finisher feed-out motor
		The stack feed-out belt HP sensor does not activate within the specified time after the stack feed-out belt motor turns on. The 1st detection failure causes a jam error, and the 2nd failure causes this SC code.
		• Stack feed-out HP sensor disconnected, defective • Feed-out motor disconnected, defective • Finisher main board connection to feed out motor disconnected, defective • Motor overload due to obstruction
		1. Check or clear obstructions around the motor drive mechanism. 2. Replace the stack feed-out motor. 3. Replace the finisher main board.

No.	Type	Details (Symptom, Possible Cause, Troubleshooting Procedures)
724	B	Finisher stapler hammer motor error
		Stapling does not finish within the prescribed time after the staple hammer motor turns on. The 1st detection failure causes a jam error, and the 2nd failure causes this SC code.
		• Stapler hammer motor overloaded due to obstruction, jammed staple, number of sheets exceeds limit for stapling • Stapler hammer motor disconnected, defective • Staple hammer motor HP sensor disconnected, defective
		1. Check or clear obstacles around the motor drive mechanism. 2. Check the harness connection. 3. Replace the staple hammer motor HP sensor if the motor is rotating. 4. Replace the finisher main board.

No.	Type	Details (Symptom, Possible Cause, Troubleshooting Procedures)
725	B	Finisher exit guide plate motor error
		After moving away from the guide plate position sensor, the exit guide is not detected at the home position within the prescribed time. The 1st detection failure issues a jam error, and the 2nd failure issues this SC code.
		• Guide plate motor disconnected, defective • Guide plate motor overloaded due to obstruction • Guide plate position sensor disconnected, defective
		1. Check the connections and cables for the components mentioned above. 2. Check for blockages in the guide plate motor mechanism. 3. Replace the guide plate position sensor and/or guide plate motor 4. Replace the finisher main board.

No.	Type	Details (Symptom, Possible Cause, Troubleshooting Procedures)
726	B	Shift jogger motor 1 error
		The sides fences do not retract within the prescribed time after the shift jogger motor switches on. The 1st detection failure causes a jam error, and the 2nd failure causes this SC code.
		• Shift jogger motor disconnected, defective • Shift jogger motor overloaded due to obstruction • Shift jogger HP sensor disconnected, defective
		1. Check or clear obstacles around the motor drive mechanism. 2. Check the harness connection. 3. Replace the shift jogger HP sensor 4. Replace the shift jogger motor. 5. Replace the finisher main board.

No.	Type	Details (Symptom, Possible Cause, Troubleshooting Procedures)
728	B	Shift jogger retraction motor error
		The side fences do not retract within the prescribed time after the retraction motor switches on. The 1st detection failure causes a jam error, and the 2nd failure causes this SC code.
		• Motor harness disconnected, loose, defective • Motor defective • Motor overload • HP sensor defective
		1. Check or clear obstacles around the motor drive mechanism. 2. Check the harness connection. 3. Replace the shift tray jogger lift HP sensor. 4. Replace the shift jogger retraction motor. 5. Replace the finisher main board.

No.	Type	Details (Symptom, Possible Cause, Troubleshooting Procedures)
730	B	Lower Transport Motor Error: 3K Finisher B830
		No encoder pulse signal is detected for the lower transport motor within 600 ms. The 1st failure issues this SC code.
		• Lower transport motor disconnected, defective • Finisher connection to lower transport motor loose, defective • Lower transport motor blocked by an obstruction • Lower transport motor defective • Finisher main board defective
		1. Check or clear obstacles around the motor drive mechanism. 2. Check the harness connection. 3. Replace the lower transport motor. 4. Replace the finisher main board.

No.	Type	Details (Symptom, Possible Cause, Troubleshooting Procedures)
731	B	Upper Tray Exit Motor Error (Proof Tray): 3K Finisher B830
		No encoder pulse signal is detected for the upper transport motor within 600 ms. The 1st failure issues this SC code.
		• Upper tray exit motor disconnected, defective • Finisher connection to upper transport motor loose, defective • Upper tray exit motor blocked by an obstruction • Upper tray exit motor defective • Finisher main board defective
		1. Check or clear obstacles around the motor drive mechanism. 2. Check the harness connection. 3. Replace the upper tray exit motor. 4. Replace the finisher main board.

No.	Type	Details (Symptom, Possible Cause, Troubleshooting Procedures)
732	B	Shift Tray Exit Motor: 3K Finisher B830
		The shift tray exit motor is not operating. The 1st failure issues this SC code.
		• Motor harness loose, broken, defective • Motor is blocked by an obstruction • Motor defective • Finisher main control board defective
		1. Check or clear obstacles around the motor drive mechanism. 2. Check the harness connection. 3. Replace the shift tray exit motor. 4. Replace the finisher main board.

No.	Type	Details (Symptom, Possible Cause, Troubleshooting Procedures)
733	B	Stapler Exit Motor: 3K Finisher B830
		The stapler exit motor is not operating. The 1st failure issues this SC code.
		• Motor harness loose, broken, defective • Motor is blocked by an obstruction • Motor defective • Finisher main control board defective
		1. Check or clear obstacles around the motor drive mechanism. 2. Check the harness connection. 3. Replace the stapler exit motor. 4. Replace the finisher main board.

No.	Type	Details (Symptom, Possible Cause, Troubleshooting Procedures)
734	B	Upper Tray Junction Gate Motor: 3K Finisher B830
		The upper tray junction gate HP sensor did not detect the gate at the home position within 200 ms after two attempts. -or- The HP sensor twice detected the gate at the home position for more than 200 ms after it was supposed to open. The 1st failure causes a jam error, and the 2nd failure causes this SC code.
		• Junction gate did not arrive at the home position within the specified time. • Junction gate did not leave the home position within the specified time.
		1. Check or clear obstacles around the motor drive mechanism. 2. Check the harness connection. 3. Replace the upper tray junction gate HP sensor. 4. Replace the upper tray junction gate motor. 5. Replace the finisher main board.

No.	Type	Details (Symptom, Possible Cause, Troubleshooting Procedures)
735	B	Staple Junction Gate Motor Error: 3K Finisher B830
		The staple tray junction gate HP sensor did not detect the gate at the home position within 200 ms after two attempts. -or- The HP sensor twice detected the gate at the home position for more than 200 ms after it was supposed to open. The 1st failure causes a jam error, and the 2nd failure causes this SC code.
		• Junction gate did not arrive at the home position within the specified time • Junction gate did not leave the home position within the specified time
		1. Check or clear obstacles around the motor drive. 2. Check the harness connection. 3. Replace the staple tray junction gate HP sensor. 4. Replace the staple junction gate motor. 5. Replace the finisher main board.

No.	Type	Details (Symptom, Possible Cause, Troubleshooting Procedures)
736	B	Pre-Stack Junction Gate Motor Error: 3K Finisher B830
		The pre-stack junction gate HP sensor did not detect the gate at the home position for within 200 ms after two attempts. -or- The HP sensor twice detected the gate at the home position for more than 200 ms after it was supposed to open. The 1st failure causes a jam error, and the 2nd failure causes this SC code.
		• Junction gate did not arrive at the home position within the specified time • Junction gate did not leave the home position within the specified time
		1. Check or clear obstacles around the motor drive mechanism. 2. Check the harness connection. 3. Replace the pre-stack junction gate HP sensor. 4. Replace the pre-stack junction gate motor. 5. Replace the finisher main board.

No.	Type	Details (Symptom, Possible Cause, Troubleshooting Procedures)
737	B	Pre-Stack Transport Motor Error: 3K Finisher B830
		The pre-stack transport motor is not operating.
		• Motor harness loose, broken, defective • Motor is blocked by an obstruction • Motor defective • Finisher main control board defective
		1. Check or clear obstacles around the motor drive mechanism. 2. Check the harness connection. 3. Replace the pre-stack transport motor. 4. Replace the finisher main board.

No.	Type	Details (Symptom, Possible Cause, Troubleshooting Procedures)
738	B	Pre-Stack Junction Gate Release Motor Error: 3K Finisher B830
		The pre-stack junction gate release HP sensor did not detect the gate at the home position within 200 ms after two attempts. -or- The HP sensor twice detected the gate at the home position for more than 200 ms after it was supposed to open. The 1st failure causes a jam error, and the 2nd failure causes this SC code.
		• Junction gate did not arrive at the home position within the specified time. • Junction gate did not leave the home position within the specified time.
		1. Check or clear obstacles around the motor drive mechanism. 2. Check the harness connection. 3. Replace the pre-stack junction gate release HP sensor. 4. Replace the pre-stack junction gate release motor. 5. Replace the finisher main board.

No.	Type	Details (Symptom, Possible Cause, Troubleshooting Procedures)
740	B	Finisher corner stapler motor error: 3K Finisher B830
		The stapler motor did not switch off within 600 ms after operating. The 1st detection failure issues a jam error, and the 2nd failure issues this SC code.
		• Number of sheets in the stack exceeded the limit for stapling • Stapler rotation sensor 1 defective • Staple jam • Motor blocked by an obstruction • Stapler motor harness loose, broken, defective • Corner stapler motor defective • Main control board defective
		1. Check the connections and cables for the components mentioned above. 2. Check or clear staple jams around the stapler. 3. Replace the stapler. 4. Replace the finisher main board.

No.	Type	Details (Symptom, Possible Cause, Troubleshooting Procedures)
741	B	Finisher corner stapler rotation motor error: 3K Finisher B830
		The stapler did not return to its home position within the specified time after stapling. -or- The stapler failed to leave the home position within the specified time. The 1st detection failure issues a jam error, and the 2nd failure issues this SC code.
		• Defective stapler rotation motor • Overload to the stapler rotation motor • Defective stapler rotation HP sensor
		1. Check or clear obstacles around the motor drive mechanism. 2. Check the harness connection. 3. Replace the stapler rotation HP sensor. 4. Replace the corner stapler rotation motor. 5. Replace the finisher main board.

No.	Type	Details (Symptom, Possible Cause, Troubleshooting Procedures)
742	B	Finisher Stapler Movement Motor Error: 3K Finisher B830
		Staple movement is not finished for a certain time. The 1st detection failure issues a jam error, and the 2nd failure issues this SC code.
		• Motor overload • Loose connection of the stapler home position sensor • Loose connection of the stapler movement motor • Defective stapler home position sensor • Defective stapler movement motor
		1. Check or clear obstacles around the motor drive mechanism. 2. Check the harness connection. 3. Replace the stapler home position sensor. 4. Replace the stapler movement motor. 5. Replace the finisher main board.

No.	Type	Details (Symptom, Possible Cause, Troubleshooting Procedures)
743	B	Booklet Stapler Motor Error 1: Front Motor (Booklet Finisher D434)
		The booklet stapler - front does not start operation within the specified time. The 1st detection failure issues a jam error, and the 2nd failure issues this SC code.
		• Booklet stapler motor (front) harness loose, broken, defective • Booklet stapler motor (front) overloaded due to obstruction • Booklet stapler motor (front) defective • Booklet finisher control board defective
		1. Check or clear obstacles around the motor drive mechanism. 2. Check the harness connection. 3. Replace the booklet stapler motor - front. 4. Replace the finisher main board.

No.	Type	Details (Symptom, Possible Cause, Troubleshooting Procedures)
744	B	Booklet Stapler Motor Error 2: Rear Motor (Booklet Finisher D434)
		The booklet stapler - rear does not start operation within the specified time. The 1st detection failure issues a jam error, and the 2nd failure issues this SC code.
		• Booklet stapler motor (rear) harness loose, broken, defective • Booklet stapler motor (rear) overloaded due to obstruction • Booklet stapler motor (rear) defective • Booklet finisher control board defective
		1. Check or clear obstacles around the motor drive mechanism. 2. Check the harness connection. 3. Replace the booklet stapler motor - rear. 4. Replace the finisher main board.

No.	Type	Details (Symptom, Possible Cause, Troubleshooting Procedures)
745	B	Feed-Out Belt Motor Error (Finisher B830)
		The stack feed-out belt HP sensor does not activate within the specified time after the stack feed-out belt motor turns on. The 1st detection failure causes a jam error, and the 2nd failure causes this SC code.
		If the motor is operating • Stack feed-out HP sensor harness loose, broken, defective • Stack feed-out HP sensor defective If the motor is not operating: • Feed-out belt motor blocked by an obstruction • Feed-out belt motor harness loose, broken, defective • Feed-out belt motor defective • Booklet finisher main board defective
		1. Check or clear obstacles around the motor drive mechanism. 2. Check the harness connection. 3. Replace the stack feed-out belt HP sensor. 4. Replace the feed-out belt motor. 5. Replace the finisher main board.

No.	Type	Details (Symptom, Possible Cause, Troubleshooting Procedures)
746	B	Stack Plate Motor Error 1: Center Motor (B830)
		The stack plate HP sensor (center) does not activate within 500 ms after the motor turns on. The 1st detection failure causes a jam error, and the 2nd failure causes this SC code.
		If the motor is operating • Center stack plate HP sensor harness loose, broken, defective • Center stack plate HP sensor defective If the motor is not operating: • Motor blocked by an obstruction • Motor harness loose, broken, defective • Motor defective • Finisher main board defective
		1. Check or clear obstacles around the motor drive mechanism. 2. Check the harness connection. 3. Replace the stack plate HP sensor (center). 4. Replace the stack plate motor (center). 5. Replace the finisher main board.

No.	Type	Details (Symptom, Possible Cause, Troubleshooting Procedures)
747	B	Stack Plate Motor Error 2: Front Motor (B830)
		The stack plate HP sensor (front) does not activate within 500 ms after the motor turns on. The 1st detection failure causes a jam error, and the 2nd failure causes this SC code.
		If the motor is operating • Front stack plate HP sensor harness loose, broken, defective • Front stack plate HP sensor defective If the motor is not operating: • Motor blocked by an obstruction • Motor harness loose, broken, defective • Motor defective • Finisher main board defective
		1. Check or clear obstacles around the motor drive mechanism. 2. Check the harness connection. 3. Replace the stack plate HP sensor (front). 4. Replace the stack plate motor (front). 5. Replace the finisher main board.

No.	Type	Details (Symptom, Possible Cause, Troubleshooting Procedures)
748	B	Stack Plate Motor Error 3: Rear Motor (B830)
		The stack plate HP sensor (rear) does not activate within 500 ms after the motor turns on. The 1st detection failure causes a jam error, and the 2nd failure causes this SC code.
		If the motor is operating • Rear stack plate HP sensor harness loose, broken, defective • Rear stack plate HP sensor defective If the motor is not operating: • Motor blocked by an obstruction • Motor harness loose, broken, defective • Motor defective • Finisher main board defective
		1. Check or clear obstacles around the motor drive mechanism. 2. Check the harness connection. 3. Replace the stack plate HP sensor (rear). 4. Replace the stack plate motor (rear). 5. Replace the finisher main board.

No.	Type	Details (Symptom, Possible Cause, Troubleshooting Procedures)
750	B	Tray 1 (Upper Tray Lift) Motor Error: 3K Finisher B830
		The upper tray paper height sensor does not change its status within 20 sec. after the tray raises or lowers. The 1st detection failure issues a jam error, and the 2nd failure issues this SC code.
		• Tray lift motor disconnected, defective • Upper tray paper height sensor disconnected, defective • Finisher main board connection to motor loose • Finisher main board defective
		1. Check or clear obstacles around the motor drive mechanism. 2. Check the harness connection. 3. Replace the upper tray paper height sensor. 4. Replace the upper tray lift motor. 5. Replace the finisher main board.

No.	Type	Details (Symptom, Possible Cause, Troubleshooting Procedures)
753	B	Drag Drive Motor Error: 3K Finisher B830
		The drag drive HP sensor did not detect the stacking roller at the HP sensor within 1 sec. -or- The drag roller did not leave the home position at the specified time. The 1st failure causes a jam error, and the 2nd failure causes this SC code.
		If the motor is operating • Drag drive HP sensor harness loose, broken, defective • Drag drive HP sensor defective If the motor is not operating: • Motor blocked by an obstruction • Motor harness loose, broken, defective • Motor defective • Finisher main board defective
		1. Check or clear obstacles around the motor drive mechanism. 2. Check the harness connection. 3. Replace the drag drive HP sensor. 4. Replace the drag drive motor. 5. Replace the finisher main board.

No.	Type	Details (Symptom, Possible Cause, Troubleshooting Procedures)
754	B	Drag Roller Motor Error: 3K Finisher B830
		The stacking roller drag motor did not turn on.
		• Motor harness loose, broken, defective • Motor defective • Finisher control board defective
		1. Check or clear obstacles around the motor drive mechanism. 2. Check the harness connection. 3. Replace the drag roller motor. 4. Replace the finisher main board.

No.	Type	Details (Symptom, Possible Cause, Troubleshooting Procedures)
755	B	Shift Motor Error: 3K Finisher (B830)
		The shift tray half-turn sensors: Failed twice to detect the shift tray at the home position at the specified time. -or- Failed twice to detect that the shift tray had left the home position. The 1st failure causes a jam error, and the 2nd failure causes this SC code.
		If the motor is operating • Half-turn sensor 1, 2 harnesses loose, broken, defective • One of the half-turn sensors defective If the motor is not operating: • Motor blocked by an obstruction • Motor harness loose, broken, defective • Motor defective • Finisher main board defective
		1. Check or clear obstacles around the motor drive mechanism. 2. Check the harness connection. 3. Replace the shift tray half-turn sensor 1 or 2. 4. Replace the shift motor. 5. Replace the finisher main board.

No.	Type	Details (Symptom, Possible Cause, Troubleshooting Procedures)
760	B	Finisher punch motor error: 3K Finisher B830
		The punch HP sensor is not activated within the specified time after the punch motor turned on. The 1st detection failure issues a jam error, and the 2nd failure issues this SC code.
		• Punch HP sensor disconnected, defective • Punch motor disconnected or defective • Punch motor overload due to obstruction
		1. Check the connections and cables for the punch motor and HP sensor. 2. Check for blockages in the punch motor mechanism. 3. Replace the punch HP sensor and/or punch motor 4. Replace the finisher main board.

No.	Type	Details (Symptom, Possible Cause, Troubleshooting Procedures)
761	B	Fold Plate Motor Error: Booklet Finisher D434
		The fold plate moves but is not detected at the home position within the specified time. The 1st detection failure issues a jam error, and the 2nd failure issues this SC code.
		• Fold plate HP sensor disconnected, defective • Fold plate motor disconnected, defective • Fold plate motor overloaded due to obstruction.
		1. Check the connections and cables for the fold plate motor and HP sensor. 2. Check for blockages in the folder plate motor mechanism. 3. Replace the fold plate HP sensor and/or fold plate motor 4. Replace the finisher main board.

No.	Type	Details (Symptom, Possible Cause, Troubleshooting Procedures)
765	B	Fold Unit Bottom Fence Lift Motor Error: Booklet Finisher D434
		The fold unit bottom fence did not return to the home position within the specified time.
		• Fold bottom fence mechanism overloaded due to an obstruction • Fold bottom fence HP sensor connector loose, broken, defective • Fold bottom fence HP sensor defective • Fold bottom fence lift motor connector loose, broken, defective • Fold bottom fence lift motor defective • Main control board defective
		1. Check or clear obstacles around the motor drive mechanism. 2. Check the harness connection. 3. Replace the fold bottom fence HP sensor. 4. Replace the fold bottom fence lift motor. 5. Replace the finisher main board.

No.	Type	Details (Symptom, Possible Cause, Troubleshooting Procedures)
766	B	Clamp Roller Retraction Motor: Booklet Finisher D434
		The clamp roller did not return to the home position within the specified time.
		• Clamp roller mechanism overloaded due to an obstruction • Clamp roller HP sensor connector loose, broken, defective • Clamp roller HP sensor defective • Clamp roller retraction motor connector loose, broken, defective • Clamp roller retraction motor defective • Main control board defective
		1. Check or clear obstacles around the motor drive mechanism. 2. Check the harness connection. 3. Replace the clamp roller HP sensor. 4. Replace the clamp roller retraction motor. 5. Replace the finisher main board.

Service Call Tables - 7-2

SC Codes Group 7: Peripherals

No.	Type	Details (Symptom, Possible Cause, Troubleshooting Procedures)
767 -01	B	Stack JG Motor (Booklet Finisher: D434)
		The stack junction gate motor did not return to the home position within the prescribed time.
		• Check junction gate for obstruction and remove it • Stack JG HP sensor connector loose, broken, defective • Sensor defective • Stack JG motor connector loose, broken, defective • Motor defective • Finisher main board defective
-02	B	Stack Transport Unit Motor (Booklet Finisher: D434)
		The stack transport unit HP sensor did not detect the stack transport unit at (or out of) its home position within the prescribed time. The 1st occurrence causes a jam, and the 2nd occurrence causes this SC code.
		• Check for any obstruction around the motor and remove it • Stack transport unit motor harness or connector loose, broken, defective • Stack transport unit HP sensor dirty • Sensor harness connector loose, broken, defective • Sensor defective • Motor defective • Finisher main board defective

No.	Type	Details (Symptom, Possible Cause, Troubleshooting Procedures)
770	B	Cover Interposer Lift Motor 1 Error

No.	Type	Details (Symptom, Possible Cause, Troubleshooting Procedures)
		In the first tray: • The upper limit sensor did not detect the bottom plate within the specified time after the lift motor switched on to lift the bottom plate. • The lower limit sensor did not direct the bottom plate within the specified time after the lift motor switched on to lower the bottom plate. **Note** • In both cases, 1 error count indicates a jam, 2 error counts cause this SC code.
		• Lift motor, upper limit sensor, lower limit sensor harnesses, connectors loose, broken, defective • Lift motor defective • Upper limit sensor defective • Lower limit sensor defective
		1. Check or clear obstacles around the motor drive mechanism. 2. Check the harness connection. 3. Replace lift motor 1. 4. Replace the 1st paper upper limit sensor. 5. Replace the 1st paper lower limit sensor.

No.	Type	Details (Symptom, Possible Cause, Troubleshooting Procedures)
771	B	Cover Interposer Lift Motor 2 Error
		In the second tray: • The upper limit sensor did not detect the bottom plate within the specified time after the lift motor switched on to lift the bottom plate. • The lower limit sensor did not direct the bottom plate within the specified time after the lift motor switched on to lower the bottom plate. **Note** • In both cases, 1 error count indicates a jam, 2 error counts cause this SC code.

No.	Type	Details (Symptom, Possible Cause, Troubleshooting Procedures)
		• Lift motor, upper limit sensor, lower limit sensor harnesses, connectors loose, broken, defective • Lift motor defective • Upper limit sensor defective • Lower limit sensor defective
		1. Check or clear obstacles around the motor drive mechanism. 2. Check the harness connection. 3. Replace lift motor 2. 4. Replace the 2nd paper upper limit sensor. 5. Replace the 2nd paper lower limit sensor.

No.	Type	Details (Symptom, Possible Cause, Troubleshooting Procedures)
772	B	Cover Interposer Pickup Motor 1 Error
		In the first tray: • While the pick-up roller motor was on, the pick-up roller HP sensor did not detect the pick-up roller at the home position within the specified number of pulses. • While the pick-up roller motor was on, the pick-up roller HP sensor did not detect the pick-up roller at the home position above the specified number of pulses. **Note** • In both cases, 1 error count indicates a jam, 2 error counts cause this SC code.
		• Pick-up motor, pick-up roller HP sensor harnesses, connectors were loose, broken, defective • Pick-up motor overload due to an obstruction • Pick-up motor defective • Pick-up roller HP sensor defective
		1. Check or clear obstacles around the motor drive mechanism. 2. Check the harness connection. 3. Replace the 1st pick-up roller HP sensor. 4. Replace the 1st pick-up motor.

No.	Type	Details (Symptom, Possible Cause, Troubleshooting Procedures)
773	B	Cover Interposer Pickup Motor 2 Error
		In the second tray: • While the pick-up roller motor was on, the pick-up roller HP sensor did not detect the pick-up roller at the home position within the specified number of pulses. • While the pick-up roller motor was on, the pick-up roller HP sensor did not detect the pick-up roller at the home position above the specified number of pulses. **Note** • In both cases, 1 error count indicates a jam, 2 error counts cause this SC code.
		• The pick-up motor, pick-up roller HP sensor harnesses, connectors were loose, broken, defective • Pick-up motor overload due to an obstruction • Pick-up motor defective • Pick-up roller HP sensor defective
		1. Check or clear obstacles around the motor drive mechanism. 2. Check the harness connection. 3. Replace the 2nd pick-up roller HP sensor. 4. Replace the 2nd pick-up motor.

No.	Type	Details (Symptom, Possible Cause, Troubleshooting Procedures)
775	B	Jogger Top Fence Motor: 3K Finisher B830
		The top fence HP sensor detected that: The top fence did not arrive at the home position within the specified number of pulses. -or- The top fence failed to leave the home position within the specified number of pulses.

No.	Type	Details (Symptom, Possible Cause, Troubleshooting Procedures)
		If the jogger top fence motor is operating: • Top fence HP sensor harness loose, broken, defective • Top fence HP sensor defective If the jogger top fence motor is not operating: • Motor blocked by an obstruction • Motor harness loose, broken, defective • Motor defective • Finisher main board defective
		1. Check or clear obstacles around the motor drive mechanism. 2. Check the harness connection. 3. Replace the top fence HP sensor. 4. Replace the top fence motor. 5. Replace the finisher main board.

No.	Type	Details (Symptom, Possible Cause, Troubleshooting Procedures)
776	B	Jogger Bottom Fence Motor: 3K Finisher B830
		The bottom fence HP sensor detected that: The bottom fence did not arrive at the home position at the specified time. -or- The bottom fence failed to leave the home position at the specified time.
		If the jogger bottom fence motor is operating: 1. Bottom fence HP sensor harness loose, broken, defective 2. Bottom fence HP sensor defective If the jogger bottom fence motor is not operating: 1. Motor blocked by an obstruction 2. Motor harness loose, broken, defective 3. Motor defective 4. Finisher main board defective

No.	Type	Details (Symptom, Possible Cause, Troubleshooting Procedures)
		1. Check or clear obstacles around the motor drive mechanism. 2. Check the harness connection. 3. Replace the top fence HP sensor. 4. Replace the top fence motor. 5. Replace the finisher main board.

No.	Type	Details (Symptom, Possible Cause, Troubleshooting Procedures)
780	B	Z-Fold Feed Motor Error
		The feed motor that drives the feed rollers and exit rollers in the Z-fold unit is not operating. The 1st alert signals a jam, the 2nd alert triggers this SC.
		• Motor harness loose, broken, defective • Motor blocked by an obstruction • Motor defective
		1. Check or clear obstacles around the motor drive mechanism. 2. Check the harness connection. 3. Replace the feed motor.

No.	Type	Details (Symptom, Possible Cause, Troubleshooting Procedures)
781	B	Z-Fold Lower Stopper Motor Error
		The lower stopper failed to leave the home position with the specified number of motor pulses. **Note** • The 1st detection failure causes a jam error, and the 2nd failure causes this SC code.
		• Lower stopper motor disconnected, defective • Lower stopper motor overloaded due to obstruction • Lower stopper HP sensor disconnected, defective
		1. Check or clear obstacles around the motor drive mechanism. 2. Check the harness connection. 3. Replace the lower stopper motor.

No.	Type	Details (Symptom, Possible Cause, Troubleshooting Procedures)
782	B	Z-fold Upper Stopper Motor
		The upper stopper failed to leave the home position with the specified number of motor pulses. The 1st detection failure causes a jam error, and the 2nd failure causes this SC code.
		• Upper stopper motor disconnected, defective • Upper stopper motor overloaded due to obstruction • Upper stopper HP sensor disconnected, defective
		1. Check or clear obstacles around the motor drive mechanism. 2. Check the harness connection. 3. Replace the upper stopper motor.

No.	Type	Details (Symptom, Possible Cause, Troubleshooting Procedures)
784	B	Z-Fold Timing Sensor Adjustment Error 1
		The output voltage light emitted from the sensor changed, but the return input was not sufficient to attain V0.
		• Sensor, mirror dirty from paper dust, other particles • Harness loose, broken, defective • Mirror out of position
		1. Check the harness connection. 2. Replace the fold timing sensor.

No.	Type	Details (Symptom, Possible Cause, Troubleshooting Procedures)
785	B	Z-Fold Timing Sensor Adjustment Error 2
		The output voltage light emitted from the sensor changed, but the return input was not sufficient to attain V0.
		• Sensor, mirror dirty from paper dust, other particles • Harness loose, broken, defective • Mirror out of position
		1. Check the harness connection. 2. Replace the leading edge sensor.

No.	Type	Details (Symptom, Possible Cause, Troubleshooting Procedures)
786	B	Z-Fold Memory Error
		Several attempts to write to the Z-fold memory failed.
		• Turn the machine power off/on • EEPROM on Z-Folder main board defective
		1. Check the harness connection. 2. Replace the main board.

No.	Type	Details (Symptom, Possible Cause, Troubleshooting Procedures)
787 -01	D	Entrance motor error (Stacker 1: D447)
		The motor drive PCB detected an error at the motor.
		• Loose, broken, defective harness or connector of the entrance motor • Defective motor or motor drive board
		1. Check the harness connection. 2. Replace the entrance motor.

No.	Type	Details (Symptom, Possible Cause, Troubleshooting Procedures)
-02	D	Shift JG motor error (Stacker 1: D447)
		The shift tray JG HP sensor did not detect the shift junction gate in (or out of) its home position. The 1st occurrence causes a jam, and the 2nd occurrence causes this SC code.
		• Dirty shift tray JG HP sensor • Loose, broken, defective sensor harness or connector • Loose, broken, defective shift tray JG motor harness or connector • Defective JG HP sensor • Defective shift JG motor or motor drive board
		1. Check the harness connection. 2. Replace the JG HP sensor. 3. Replace the shift JG motor.
-03	D	Transport Motor Error (Stacker 1: D447)
		The motor drive PCB detected an error at the motor.
		• Loose, broken, defective harness of the transport motor • Defective transport motor or motor drive board
		1. Check the harness connection. 1. Replace the transport motor.
-04	D	Proof Tray JG Motor (Stacker 1: D447)
		The proof tray JG HP sensor did not detect the proof tray junction gate in (or out of) its home position within the prescribed time. The 1st occurrence causes a jam, and the 2nd occurrence causes this SC code.
		• Loose, broken, defective sensor harness or connector • Dirt or defective Proof tray JG HP sensor • Defective proof tray JG HP sensor • Defective proof tray JG Motor or motor drive board
		1. Check the harness connection. 2. Replace the proof tray JG HP sensor. 1. Replace the proof tray JG motor.

No.	Type	Details (Symptom, Possible Cause, Troubleshooting Procedures)
-05	D	Proof Tray Exit Motor Error (Stacker 1: D447)
		The motor drive PCB detected an error at the motor.
		• Loose, broken, defective proof tray exit motor harness or connector • Defective proof tray exit motor or motor drive board
		1. Check the harness connection. 2. Replace the proof tray exit motor.

Important

- **Two High-Capacity Stackers can be installed in the same line.**
- **The following SC Codes (SC788-1 to 5) apply to the second stacker in the line if it is installed.**
- **SC Codes SC787-1 to -5 apply to the first stacker.**

No.	Type	Details (Symptom, Possible Cause, Troubleshooting Procedures)
788 -01	D	Entrance motor error (Stacker 2: D447)
		See SC787-01.
-02	D	Shift JG motor error (Stacker 2: D447)
		See SC787-02.
-03	D	Transport Motor Error (Stacker 2: D447)
		See SC787-03.
-04	D	Proof Tray JG Motor (Stacker 2: D447)
		See SC787-04.
-05	D	Proof Tray Exit Motor Error (Stacker 2: D447)
		See SC787-05.

No.	Type	Details (Symptom, Possible Cause, Troubleshooting Procedures)
790	B	Booklet Stapler Jogger Motor Error (Booklet Finisher: D434)
		The jogger fence HP sensor failed to detect the jogger fence at the home position within the specified time.
		• If the booklet stapler jogger motor is operating: 1. Jogger fence HP sensor harness loose, broken, defective 2. Jogger fence HP sensor defective • If the jogger bottom fence motor is not operating: 1. Motor blocked by an obstruction 2. Motor harness loose, broken, defective 3. Motor defective 4. Finisher main board defective

No.	Type	Details (Symptom, Possible Cause, Troubleshooting Procedures)
791	B	Booklet Stapler Bottom Fence Motor (Booklet Finisher: D434)
		The bottom fence failed to return to home position or failed to leave the home position within the prescribed time.
		• An obstruction is blocking the movement of the bottom fence • Motor harness loose, broken, defective • Bottom fence HP sensor loose, broken, defective • Motor defective • Sensor defective

SC792-xx: Ring Binder (D392)

792-1	D	Junction gate error	
		Detected at HP after the time prescribed to leave the HP had elapsed (more than 36 pulses) (1 detection, jam, twice detected, SC error) -or- Not detected at HP after the time prescribed to arrive at the HP had elapsed (more than 22 pulses) (1 detection, jam, twice detected, SC error)	• Path JG motor (M201) defective • Motor connector loose, broken, defective • Motor overload • Path JG sensor (S203) connector loose, broken, defective • Sensor (S203) defective

792-2	D	Pre-punch side fence HP error	
		Detected at HP after the time prescribed to leave the HP had elapsed (more than 400 pulses) (1st detection, jam, 2nd detection, SC error) -or- Not detected at HP after the time prescribed to arrive at the HP had elapsed (more than 600 pulses) (1st detection, jam, 2nd detection, SC error)	• Side jogger motor (M302) connector loose, broken, defective • Motor overload • Motor defective • Pre-punch jogger HP sensor (S301) connector loose, broken, defective • Sensor (S301) defective

792-3	D	Pre-punch jogger roller HP error	
		Detected at HP after the time prescribed to leave the HP had elapsed (more than 36 pulses) (1st detection, jam, 2nd detection, SC error) -or- Not detected at HP after the time prescribed to arrive at the HP had elapsed (more than 22 pulses) (1st detection, jam, 2nd detection, SC error)	• Jog roller lift motor (M305) connector loose, broken, defective • Motor overload • Motor defective • Jog roller lift HP sensor (S309) connector loose, broken, defective • Sensor defective

792-4	D	Punch defective	
		One or more of the following occurred: Punch unit not detected at initialization. No motor rotation detected at HP at 30 ms after the DC motor turned on No encoder pulse detected at HP at 5 ms after the DC motor turned on Not detected at HP at 400 ms after the DC motor turned on	• Punch motor (M304) connector loose, broken, defective • Motor overload • Motor defective • Punch HP sensor (S302) connector loose, broken, defective, or sensor defective • Punch encoder sensor (S303) connector loose, broken, defective, or sensor defective

792-5	D	Paddle roller HP error	
		Not detected at HP after the time prescribed to arrive at the HP had elapsed (more than 400 ms) (1st detection, jam, 2nd detection, SC error) -or- Detected at HP after the time prescribed to leave the HP had elapsed (more than 400 ms) (1st detection, jam, 2nd detection, SC error)	• Paddle roller lift motor (M603) connector loose, broken, defective • Motor overload • Motor defective • Paddle roller HP sensor (S602) connector loose, broken, defective • Sensor defective

792-6	D	Jogger fence 1 error	
		Not detected at HP after the time prescribed to arrive at the HP had elapsed (more than 400 ms) (1st detection, jam, 2nd detection, SC error) -or- Detected at HP after the time prescribed to leave the HP had elapsed (more than 400 ms) (1st detection, jam, 2nd detection, SC error)	• Jog fence 1 motor (M604) connector, loose, broken, defective • Motor defective • Motor overload • Side fence 1 HP sensor (S601) connector, loose, broken, defective • Sensor defective

792-7	D	Jogger fence 2 error	
		Not detected at HP after the time prescribed to arrive at the HP had elapsed (more than 400 ms) (1st detection, jam, 2nd detection, SC error) -or- Detected at HP after the time prescribed to leave the HP had elapsed (more than 400 ms) (1st detection, jam, 2nd detection, SC error)	• Jog fence 2 motor (M606) connector, loose, broken, defective • Motor defective • Motor overload • Side fence HP sensor 1 (S611) connector loose, broken, defective • Sensor defective

792-8	D	Stack tamper HP error	
		Not detected at HP after the time prescribed to arrive at the HP had elapsed (more than 400 ms) (1st detection, jam, 2nd detection, SC error) -or- Detected at HP after the time prescribed to leave the HP had elapsed (more than 400 ms) (1st detection, jam, 2nd detection, SC error)	• Stack tamper motor (M607) connector, loose, broken, defective • Motor defective • Motor overload • Stack tamper HP sensor (S612) connector loose, broken, defective • Sensor defective

792-9	D	Pre-bind jogger clamp HP error	
		Not detected at HP after the time prescribed to arrive at the HP had elapsed (more than 400 ms) (1st detection, jam, 2nd detection, SC error) -or- Detected at HP after the time prescribed to leave the HP had elapsed (more than 400 ms) (1st detection, jam, 2nd detection, SC error)	• Spine clamp motor (M605) connector loose, broken, defective • Motor defective • Motor overload • Clamp HP sensor (S603) connector loose, broken, defective • Sensor defective

792-10	D	Binder unit runout error	
		Not detected at HP after the time prescribed to arrive at the HP had elapsed (more than 400 ms) (1st detection, jam, 2nd detection, SC error) -or- Detected at HP after the time prescribed to leave the HP had elapsed (more than 400 ms) (1st detection, jam, 2nd detection, SC error)	• Runout press roller motor (M610) connector loose, broken, defective • Motor defective • Motor overload • Runout roller HP sensor (S614) connector loose, broken, defective • Sensor defective

792-11	D	Clamp thickness error	
		50-sheet detection sensor (S606) went OFF during pre-bind jogging when a 100-sheet thickness was detected. (1st detection jam, 2nd detection SC error) -or- 50-sheet detection sensor went OFF at initialization when the clamp moved to the open position.	• 50-sheet detection sensor (S606) connector loose, broken, defective • Sensor defective

792-12	D	Alignment pin error	
		Not detected at HP after the time prescribed to arrive at the HP had elapsed (more than 400 ms) (1st detection, jam, 2nd detection, SC error) -or- Detected at HP after the time prescribed to leave the HP had elapsed (more than 400 ms) (1st detection, jam, 2nd detection, SC error)	• Alignment pin motor (M602) connector loose, broken, defective • Motor overload • Motor defective • Alignment pin HP sensor (S604) connector loose, broken, defective • Sensor defective

792-13	D	Pre-bind jogger shutter error	
		Not detected at HP after the time prescribed to arrive at the HP had elapsed (more than 400 ms) (1st detection, jam, 2nd detection, SC error) -or- Detected at HP after the time prescribed to leave the HP had elapsed (more than 400 ms) (1st detection, jam, 2nd detection, SC error)	• Shutter motor (M608) connector loose, broken, defective • Motor overload • Motor defective • Shutter HP sensor (S605) connector loose, broken, defective • Sensor defective

792-14	D	50/100 clamp adjustment error	
		Not detected at HP after the time prescribed to arrive at the HP had elapsed (more than 400 ms) (1st detection, jam, 2nd detection, SC error) -or- Detected at HP after the time prescribed to leave the HP had elapsed (more than 400 ms) (1st detection, jam, 2nd detection, SC error)	• 50/100 adjustment motor (M702) connector loose, broken, defective • Motor overload • Motor defective • Ring switch HP sensor (S706) connector loose, broken, defective, or sensor defective • Ring switch timing sensor (S707) connector loose, broken, defective, or sensor defective

792-15	D	Timing sensor interval error	
		The bind timing sensor (S702) remained ON or OFF longer than the prescribed time (1500 ms) during initialization or ring binding (1st detection: jam, 2nd detection: SC error)	• Clamp unit motor (M701) connector loose, broken, defective • Motor overload • Motor defective • Bind timing sensor (S702) connector loose, broken, defective • Sensor defective

792-16	D	Clamp unit HP error	
		At initialization or during ring binding, did not arrive at the home position within the prescribed time (1500 ms) (1st detection: jam, 2nd detection: SC error) -or- Detected at HP after the time prescribed to leave the HP had elapsed (more than 1500 ms) (1st detection, jam, 2nd detection, SC error)	• Clamp unit motor (M701) connector loose, broken, defective • Motor overload • Motor defective • Clamp unit HP sensor (S701) connector loose, broken, defective • Sensor defective

792-17	D	Spine alignment error	
		During pin alignment operation, the pin did not reach the up position or return to the home position with the prescribed time (400 ms), and one retry failed within the same time limit.	• Alignment pin motor (M602) connector loose, broken, defective • Motor overload • Motor defective • Alignment pin HP sensor (S604) connector loose, broken, defective, or sensor defective • Alignment pin up sensor (S610) connector loose, broken, defective, or sensor defective • Stack not jogged correctly, or not punched correctly

792-18	D	Binder unit not detected	
		The binder unit could not be detected at initialization.	• Drawer connector loose, broken, defective • Drawer connector defective

792-19	D	Output belt unit rotation error	
		Detected at HP after the time prescribed to leave the HP had elapsed (more than 800 pulses) (1st detection, jam, 2nd detection, SC error) -or- Not detected at HP after the time prescribed to arrive at the HP had elapsed (more than 2300 pulses) (1st detection, jam, 2nd detection, SC error)	• Output belt rotation motor (M403) connector loose, broken, defective • Motor overload • Motor defective • Output belt rotation HP sensor (S403) connector loose, broken, defective • Sensor defective

792-20	D	Output belt 1 HP error	
		Detected at HP after the time prescribed to leave the HP had elapsed (more than 200 pulses) (1st detection, jam, 2nd detection, SC error) -or- Not detected at HP after the time prescribed to arrive at the HP had elapsed (more than 2125 pulses) (1st detection, jam, 2nd detection, SC error)	• Output belt 1 motor (M401) connector loose, broken, defective • Motor overload • Motor defective • Output belt 1 HP sensor (S401) connector loose, broken, defective • Sensor defective

792-21	D	Output belt 2 HP error	
		Detected at HP after the time prescribed to leave the HP had elapsed (more than 200 pulses) (1st detection, jam, 2nd detection, SC error) -or- Not detected at HP after the time prescribed to arrive at the HP had elapsed (more than 3130 pulses) (1st detection, jam, 2nd detection, SC error)	• Output belt 2 motor (M402) connector loose, broken, defective • Motor overload • Motor defective • Output belt 2 HP sensor (S402) connector loose, broken, defective • Sensor defective

792-22	D	Stack height error	
		Stack height sensor remained ON while moving toward the top. -or- The sensor did not go ON within 6 sec. after the motor turned on.	• Stacker motor (M501) connector loose, broken, defective • Motor overload • Stack height sensor (S502) connector loose, broken, defective • Sensor defective

792-23	D	Stacker error	
		Although the stacker was full at the start and end of stacker operation with the stacker full (stacker sensors ON together), no documents were detected (also when documents were leaning) -or- Although the stacker was detected full with the stacker stopped, no documents were detected within 2 sec. (1st detection jam, 2nd detection SC error)	• Stacker HP sensor (S501) connector loose, broken, defective, or sensor defective • Stacker height HP sensor (S502) connector loose, broken, defective, or sensor defective • Stacker detect sensor (S504) loose, broken, defective, or sensor defective

SC793-1	D	Shift Motor Error	Stacker 1 (D447)
		The shift roller HP sensor did not detect the shift roller at (or out of) its home position within the prescribed time. The 1st occurrence causes a jam, and the 2nd occurrence causes this SC code.	
		• Shift roller HP sensor dirty • Sensor harness or connector loose, broken, defective • Check for and remove any obstructions that interfere with the operation of the motor • Shift motor harness or connector loose, broken, defective • Sensor defective • Motor or motor drive board defective	

SC793-2	D	Front Jogger Fence Motor Error	Stacker 1 (D447)
		The front jogger fence HP sensor did not detect the front jogger fence at (or out of) its home position within the prescribed time. The 1st occurrence causes a jam, and the 2nd occurrence causes this SC code.	
		• Front jogger fence HP sensor dirty • Sensor harness or connector loose, broken, defective • Check for and remove any obstructions that interfere with the operation of the motor • Motor harness or connector loose, broken, defective • Sensor defective • Motor or shift motor drive board defective	

SC793-3	D	Rear Jogger Fence Motor Error	Stacker 1 (D447)
		The rear jogger fence HP sensor did not detect the rear jogger fence at (or out of) its home position within the prescribed time. The 1st occurrence causes a jam, and the 2nd occurrence causes this SC code.	
		• Rear jogger fence HP sensor dirty • Sensor harness or connector loose, broken, defective • Check for and remove any obstructions that interfere with the operation of the motor • Motor harness or connector loose, broken, defective • Sensor defective • Motor or shift motor drive board defective	

SC793-4	D	Jogger Fence Retraction Motor Error	Stacker 1 (D447)
		The jogger fence retraction HP sensor did not detect the jogger fences at (or out of) their home position within the prescribed time. The 1st occurrence causes a jam, and the 2nd occurrence causes this SC code.	
		• Jogger fence retraction HP sensor dirty • Sensor harness or connector loose, broken, defective • Check for and remove any obstructions that interfere with the operation of the motor • Motor harness or connector loose, broken, defective • Sensor defective • Motor or shift motor drive board defective	

SC793-5	D	Sub Jogger Motor Error	Stacker 1 (D447)
		The sub jogger HP sensor did not detect the sub jogger fence at (or out of) its home position within the prescribed time. The 1st occurrence causes a jam, and the 2nd occurrence causes this SC code.	
		• Sub jogger fence HP sensor dirty • Sensor harness or connector loose, broken, defective • Check for and remove any obstructions that interfere with the operation of the motor • Motor harness or connector loose, broken, defective • Sensor defective • Motor or shift motor drive board defective	

SC793-6	D	LE Stopper Motor Error	Stacker 1 (D447)
		The LE stopper HP sensor did not detect the leading edge stopper at (or out of) its home position within the prescribed time. The 1st occurrence causes a jam, and the 2nd occurrence causes this SC code.	

		• LE stopper HP sensor dirty • Sensor harness or connector loose, broken, defective • Check for and remove any obstructions that interfere with the operation of the motor • Motor harness or connector loose, broken, defective • Sensor defective • Motor or shift motor drive board defective

SC793-7	D	Tray Lift Motor Error	Stacker 1 (D447)
		When the tray was ascending (or descending), the state of the paper height sensor did not change at the prescribed time to detect the height of the stack and adjust the height of the tray. The 1st occurrence causes a jam, and the 2nd occurrence causes this SC code.	
		• Check for and remove any obstructions that interfere with the operation of the tray lift motor or paper height sensor actuator • Sensor actuator loose or broken • Sensor harness or connector loose, broken, defective • Motor harness or connector loose, broken, defective • Sensor defective • Motor defective	

SC793-8	D	Proof Tray Exit Motor Error	Stacker 1 (D447)
		The motor drive PCB detected an error at the motor.	
		• Motor harness or connector loose, broken, defective • Motor or motor drive board defective	

Important

- **Two High-Capacity Stackers can be installed in the same line.**
- **The following SC Codes (SC794-1 to 8) apply to the second stacker in the line if it is installed.**
- **SC Codes SC793-1 to 8 apply to the first stacker.**

SC794 -01	D	Shift Motor Error	Stacker 2 (D447)
		See SC793-1.	

-02	D	Front Jogger Fence Motor Error
		See SC793-2.
-03	D	Rear Jogger Fence Motor Error
		See SC793-3.
-04	D	Jogger Fence Retraction Motor Error
		See SC793-4.
-05	D	Sub Jogger Motor Error
		See SC793-5.
-06	D	LE Stopper Motor Error
		See SC793-6.
-07	D	Tray Lift Motor Error
		See SC793-7.
-08	D	Proof Tray Exit Motor Error
		See SC793-8.

SC795-1	A	Master-to-Slave Board Communication Errors	PB (D391)
		Master/Slave Control Board Communication Error 1	
		Master control board could not communicate with the slave control board for over 5 sec. and issued the communication alarm.	
		• Slave board connector loose, broken, defective • Slave board defective	
		Master/Slave Control Board Communication Error 2	
		Slave control board could not communicate with the master control board for over 5 sec. and issued the communication alarm.	
		• Received data corrupted • Cycle the machine power off/on • Slave control board defective	

		Download Error
		The version of the slave control board could not be detected at power on. Communication between the master and slave control boards is not possible if the slave board firmware cannot be written to the board.
		• Slave board firmware not written • Cycle the machine power off/on • Slave control board defective

SC795-2	A	Master-to-Relay Board Communication Error	PB (D391)
		The master control board could not communicate with the relay control board.	
		• Master control board, relay control board connectors loose, broken, defective • Master control board defective • Relay control board defective	
		Download Error	
		The version of the master control board could not be detected at power on	
		• Master control board firmware not written	

SC795-3	A	Slave-to-Cutter Control Board Communication Error	PB (D391)
		Slave-to-Cutter Board Communication Error 1	
		Slave control board could not communicate with the cutter control board (it detected the communication alarm for over 5 sec.	
		• Cutter board connector loose, broken, defective • Cutter control board defective	

		Slave-to-Cutter Board Communication Error 2
		Cutter control board could not communicate with the slave control board and detected the communication alarm for over 5 sec. More than twice the maximum allowed alarm recovery time (2 to 3 sec.)
		• Slave control board connectors loose, broken, defective • Cutter control board connectors loose, broken, defective • Slave control board defective • Cutter control board defective
		Download Error
		The version of the firmware on the cutter control board could not be detected at power on. Communication between the slave and cutter control boards is not possible if the cutter board firmware cannot be written to the board.
		• Cutter control board connection loose, broken, defective • Cutter control board defective

SC795-4	A	Bookbinder EEPROM Error	PB (D391)
		EEPROM Read Error	
		After EEPROM write operation was completed, the data was read from the same address.	
		• Master control board EEPROM not installed, not installed correctly • EEPROM defective	
		EEPROM Write Error	
		When data was written to the EEPROM, the EEPROM signaled that it was busy for longer than 25 ms and did not recover. The error time exceeded three times the maximum time allowed for recovery (8 ms)	
		• Master control board EEPROM not installed, not installed correctly • EEPROM defective	

SC795-5	A	Master-to-Inserter Board Communication Error	PB (D391)

		Communication Error at Initialization
		After the ConfigSet (parallel signal) went ON while the inserter connection status was being checked, the initialization did not end successfully within 5 sec. The error time exceeded three times the maximum time allowed for the initialization communication (1.5 ms).
		• Inserter board connector loose, broken, defective • Inserter board defective
		Bookbinder-to-Inserter Communication Error
		A command response for the inserter was not issued within the time prescribed for the timeout. There was an overflow in memory where information required for paper feed is stored. (Master control board detection.)
		• Inserter control board defective • Inserter control board connector loose, broken, defective
		Download Error
		The version of the firmware on the inserter control board could not be detected at power on.
		• Inserter control board defective • Inserter control board connector loose, broken, defective

SC795-6	A	24V Check Signal Error 1	PB (D391)
		The 24V1 monitor signal of the master control board did not go off even though the front door switch was closed. (Relay circuit failed to go ON.)	
		• Front cover switch error • 24V1 monitor signal error • 24V1 power supply error	

SC795-7	A	24V Check Signal Errors	PB (D391)

		24V Check Signal Error 1
		The top cover switch is open or the master control board 24V2 monitor signal failed to go OFF within 5 sec., even though the front door switch and top cover sensor are closed.
		• Top cover switch error • Front cover switch error • Stacking cover switch error • Master control board connection loose, broken, defective • Master control board defective
		24V Check Signal Error 2
		The 24V2 check signal of the slave control board failed to go OFF within 5 sec. even though the front door and top cover are closed.
		• Top cover switch error • Front cover switch error • Slave control board connection loose, broken, defective • Slave control board defective

SC795-8	A	24V Check Signal Error	PB (D391)
		The 24V3 check signal of the slave control board failed to go OFF within 5 sec. even though the front door is closed.	
		• Front cover switch error • Slave control board connection loose, broken, defective • Slave control board defective	

SC795-9	A	Power Supply Fan Lock Errors	PB (D391)
		Power Supply Fan (R) Lock	
		Power Supply Fan (C) Lock	
		Power Supply Fan (L) Lock	
		A fan lock signal was detected during rotation of the power supply fan motor in one of the power supply fans (Right, Center, Left). Two retries were attempted at 12 sec. intervals after detection of the firs lock signal.	
		• Fan overload • Confirm that there are no obstructions interfering with operation of the fan • Fan motor defective	

SC795-10	A	Spine Plate Lower Fan Errors	PB (D391)
		Spine Plate Lower Fan (F) Lock	
		Spine Plate Lower Fan (R) Lock	
		A fan lock signal was detected for 1 sec. during rotation of one of the lower spine plate fan motors. Two retries were attempted at 12 sec. intervals after detection of the first lock signal.	
		• Fan overload • Confirm that there are no obstructions interfering with operation of the fan • Fan motor defective	

SC795-11	A	Spine Plate Upper Fan Errors	PB (D391)
		Spine Plate Upper Fan (F) Lock	
		Spine Plate Upper Fan (R) Lock	
		A fan lock signal was detected for 1 sec. during rotation of one of the upper spine plate fan motors. Two retries were attempted at 12 sec. intervals after detection of the first lock signal.	
		• Fan overload • Confirm that there are no obstructions interfering with operation of the fan • Fan motor defective	

SC795-12	A	Signature Fan 2 Error	PB (D391)
		Signature Fan 2F Lock	
		Signature Fan 2R Lock	
		A fan lock signal was detected for 1 sec. during rotation of one of the signature fan 2 motors (Front/Rear). Two retries were attempted at 12 sec. intervals after detection of the first lock signal.	
		• Fan overload • Confirm that there are no obstructions interfering with operation of the fan • Fan motor defective	

SC795-13	A	Signature Fan 1 Errors	PB (D391)
		Signature Fan 1F Lock	
		Signature Fan 1R Lock	
		A fan lock signal was detected for 1 sec. during rotation of one of the signature fan 1 motors (Front/Rear). Two retries were attempted at 12 sec. intervals after detection of the first lock signal.	
		• Fan overload • Confirm that there are no obstructions interfering with operation of the fan • Fan motor defective	

SC795-14	A	Glue Supply Fan H Lock	PB (D391)
		A fan overload/lock signal was detected for 1 sec. during rotation of the upper side glue supply fan motor. Two retries were attempted at 12 sec. intervals after the detection of the first lock signal.	
		• Fan overload • Confirm that there are no obstructions interfering with operation of the fan • Fan motor defective	

SC795-15	A	Glue Supply Fan L Lock	PB (D391)
		A fan overload/lock signal was detected for 1 sec. during rotation of the lower glue supply fan motor. Two retries were attempted at 12 sec. intervals after the detection of the first lock signal.	
		• Fan overload • Confirm that there are no obstructions interfering with operation of the fan • Fan motor defective	

SC795-16	A	Grip HP Sensor (S93) Error	PB (D391)
		The grip unit did not pull away from the HP sensor during operation. -or- The grip unit did not arrive at the HP sensor	
		• Book grip motor (M43) connection loose, broken, defective • Motor defective • Grip HP sensor harness loose, broken, defective • Sensor defective	

SC795-17	A	Main Grip Signature Sensor (S55)	PB (D391)
		The main grip signature sensor did not go off after the main grip unit released the signature and moved the prescribed distance. -or- The grip unit did not arrive at the sensor.	
		• Front and rear main grip motors (M23, M24) connection loose, broken, defective • Motor defective • Main grip signature sensor harness loose, broken, defective • Sensor defective	

SC795-18	A	Trimming Buffer HP Sensor: Left (S103) Error	PB (D391)
		The trimmings buffer sensor (S103): Did not go ON within 3 sec. when it was supposed to move to the right to its home position. Did not go OFF within 5 sec. when it was supposed to move to the left away from its home position.	
		• Clear jammed trimming scraps away from the trimmings buffer • Trimmings buffer motor (M37) connections loose, broken, defective • Motor defective • Sensor harness loose, broken, defective • Sensor defective	

SC795-19	A	Trimming Buffer HP Sensor: Right (S100) Error	PB (D391)
		The trimmings buffer failed to move away from the dump port on top of the trimmings box or failed to arrive at the port. The trimmings buffer sensor: right (S100) did not go OFF within 3 sec. when the trimmings buffer was supposed to move away from the sensor. The trimmings buffer sensor: right (S100) did not go ON within 5 seconds when the trimmings buffer was supposed to arrive at the sensor.	
		• Clear jammed trimming scraps away from the trimmings buffer • Trimmings buffer motor (M37) connections loose, broken, defective • Motor defective • Sensor harness loose, broken, defective • Sensor defective	

SC795-20	A	Trimmings Buffer Motor (M37) Error	PB (D391)
		The trimmings buffer motor is not rotating.	
		• Clear jammed trimming scraps away from the trimmings buffer • Trimmings buffer motor (M37) connections loose, broken, defective • Motor defective • Trimmings buffer sensor: left/right (S103/S100) harness loose, broken, defective • Sensor defective	

SC795-21	A	Book Press Plate Sensor (S104) Error	PB (D391)
		The trimmings buffer and book press plate did not move after the trimmings buffer motor turned on. The book press plate sensor did not go OFF with 3 sec.. -or- The book press plate sensor did not go ON within 3 sec.	
		• Clear jammed trimming scraps away from the trimmings buffer • Trimmings buffer motor (M37) connections loose, broken, defective • Motor defective • Trimmings buffer sensor: left/right (S103/S100) harness loose, broken, defective • Sensor defective	

SC795-22	A	Book Buffer Tray HP Sensor (S78)	PB (D391)
		The book buffer tray failed to move to the rear or failed to move to the front. The book buffer tray HP sensor failed to go ON within 3 sec. when the tray was supposed to move front to rear. The book buffer tray HP sensor failed to go OFF within 3 sec. when the tray was supposed to move rear to front.	
		• Book jammed on the rail of the book buffer tray • Book buffer tray overloaded • Book buffer tray motor (M39) connections loose, broken, defective • Motor defective • Book buffer tray HP sensor (M78) harness loose, broken, defective • Sensor defective	

SC795-23	A	Edge Press Plate HP Sensor (S90) Error	PB (D391)
		During edge press plate operation during trimming: The edge press plate HP sensor did not go OFF within the prescribed time because it failed to pull away from the HP sensor. The edge press plate HP sensor did not ON within the prescribed time because it failed to arrive at the HP sensor. The edge press motor (M36) stopped when the press HP sensor (S90) switched ON, but after the motor stopped the HP sensor went OFF.	
		• Edge press motor (M36) connections loose, broken, defective • Motor defective • Edge press plate HP sensor (S90) harness loose, broken, defective • Sensor defective	

SC795-24	A	Press End Sensor (S87) Error	PB (D391)
		The press end sensor did not detect the release of the edge press plate (END of operation) against the book in the trimming unit. The sensor did not go ON within 8 sec. -or- The press end sensor went ON the edge press plate motor (M36) stopped, but the sensor went OFF again after the motor stopped.	
		• Edge press plate motor (M36) connections loose, broken, defective • Motor defective • Press end sensor (S87) harness loose, broken, defective • Sensor defective	

SC795-25	A	Press Limit Sensor (S89) Error	PB (D391)
		The press limit sensor went ON and detected the edge press plate beyond its maximum position.	
		• Edge press plate motor (M36) connections loose, broken, defective • Motor defective • Press limit sensor harness loose, broken, defective • Sensor defective • Plate out of position (see below) **Note**: For a detailed description about how to correct this problem, please refer to the replacement and adjustment procedures in the Perfect Binder manual under "Trimming Unit" in the "Common Procedures" section.	

SC795-26	A	Slide HP Sensor (S82) Error	PB (D391)
		The slide motor (M44) did not leave the home position. When the slide was raised, the slide HP sensor did not go OFF within 180 mm of movement. -or- The slide motor (M44) did not reach the home position. The slide HP sensor did not go ON within 180 mm of movement after the slide was lowered.	
		• Signature has jammed during transport. • Slide motor (M44) connections loose, broken, defective • Motor defective • Slide HP sensor (S82) harness loose, broken, defective • Sensor defective	

SC795-27	A	Rotate HP Sensor 1 (S95) Error	PB (D391)
		Rotate motor 1 (M42) did not leave the home position and the HP sensor did not go OFF after enough time elapsed for rotation through an arc of 50°. -or- The motor did not arrive at the HP sensor. When rotate motor 1 (M42), rotate motor 2 (M41) were both initialized, their HP sensors did not turn ON after enough time elapsed for rotation through an arc of 440°.	
		• Jam or overload during book rotation. • Rotate motor 1 (M42) connections loose, broken, defective • Motor defective • Rotate HP sensor 1 (S95)harness loose, broken, defective • Rotate HP sensor (S95) defective	

SC795-28	A	Rotate HP Sensor 2 (S91)	PB (D391)
		Rotate motor 2 (M41) did not leave the home position and the HP sensor did not go OFF after enough time has elapsed for rotation through an arc of 30°. -or- Rotate motor 2 (M41) did not reach the home position and the HP sensor did not go ON after enough time had elapsed for rotation through an arc of 400°.	
		• Jam or overload during book rotation. • Rotate motor 2 (M41) connections loose, broken, defective • Motor defective • Rotate HP sensor (S91) harness loose, broken, defective • Sensor defective	

SC795-29	A	Cutter Motor (M35) Error	PB (D391)
		One of the following occurred: • The cutter blade did not move after it was moved to the rear (it did not leave home position). • The blade did not move away from the cutting point on the blade cradle (it did not arrive at the home position). • The blade did not move for a rear-to-front cut. • The blade did not move away from the blade cradle to the front within 10 sec. • When moving from the front, the blade did not reach the blade cradle within 10 sec. • When moving from the rear, the blade did not reach the blade cradle.	
		• Cutter motor (M35) connections loose, broken, defective • Motor defective • Blade sensor 1, 2 (S84, S85) sensor harness loose, broken, defective • Sensor defective • Blade is dull, cutting poorly **Note:** Sensors S84, S85 are on the cutter area PCB.	

SC795-30	A	Trimmer Limit Sensor (S86) Error	PB (D391)
		The blade reached the limit position and the trimmer limit sensor went ON.	
		• Cutter motor (M35) connections loose, broken, defective • Motor defective • Trimmer limit sensor (S86) harness loose, broken, defective • Sensor defective	
		Note: For a detailed description about how to correct this problem, please refer to the replacement and adjustment procedures in the Perfect Binder manual under "Trimming Unit" in the "Common Procedures" section.	

SC795-31	A	Book Lift Tray HP Sensor (S79) Error	PB (D391)
		The book lift tray did not go up because the book tray lift HP sensor did not go OFF within 1 sec. after the book tray lift motor (M38) turned on to raise the tray. -or- The book lift tray did not go down because the book tray lift HP sensor did not go ON within 1.5 sec. after the book tray lift motor (M38) turned on to lower the tray.	
		• Book tray lift motor (M38) connections loose, broken, defective • Motor defective • Book lift tray HP sensor (S79) harness loose, broken, defective • Sensor defective	

SC795-32	A	Book Lift Tray Motor (M38) Error	PB (D391)
		The motor is not rotating. The encoder is checked for motor lock at 50 ms intervals.	
		• Book lift tray motor (M38) locked, blocked by the book press plate or a jammed book. • Motor connections loose, broken, defective • Motor defective • Book lift tray HP sensor (S79) harness loose, broken, defective • Sensor defective	

SC795-33	A	Book Buffer Tray HP Sensor (S78) Error	PB (D391)
		The book buffer tray did not leave the home position. The book collection buffer tray HP sensor did not go OFF within 1 sec. after the book buffer tray motor (M39) turned on. -or- The book buffer tray did not reach the home position. After the book buffer tray motor (M39) turned on, the book buffer tray did not reach the HP sensor within 3.5 sec.	
		• Book collection buffer tray overloaded. • Book buffer tray motor (M39) connections loose, broken, defective • Motor defective • Book buffer tray HP sensor (S78) harness loose, broken, defective • Sensor defective	

SC795-34	A	Blade Cradle HP Sensor (S83) Error	PB (D391)
		The blade cradle did not go up after the trimming blade cradle motor (M40) turned on long enough to raise the blade cradle 12 mm to switch the blade cradle HP sensor OFF. -or- The blade cradle did not go down after the trimming blade cradle motor (M40) turned on long enough to lower the cradle 21 mm to turn the blade cradle HP sensor ON.	
		• Blade cradle motor (M40) connections loose, broken, defective • Motor defective • Blade cradle HP sensor (S83) harness loose, broken, defective • Sensor defective • Book press plate or cutter has interfered with the blade cradle movement.	

SC795-35	A	Book Stacker Door Lock Solenoid (SOL5) Error	PB (D391)
		The book stacker door is locked but the book stacker door sensor (S98) did not go OFF.	
		• Book stacker door lock solenoid (SOL5) connections loose, broken, defective • Solenoid defective • Book stacker door sensor harness loose, broken, defective • Sensor defective	

SC795-36	A	Glue Heater (HTR1) Errors	PB (D391)
		Heater failed to start: Error 1	
		600 sec. after the bookbinder left the energy save mode, the glue thermistor could not detect the target temperature (+-5).	
		• Heater (HTR1), glue temperature thermistor (S56) defective	
		Heater failed to start: Error 2	
		After the glue thermistor detected a glue temperature of 50°C, it could not detect a temperature above 140°C within 200 sec.	
		• Heater, glue temperature thermistor (S56) defective	

SC795-37	A	Electrical Short in the Gluing Unit	PB (D391)
		• Heater short. The glue unit thermistor detected a temperature higher than 200C for longer than 1 sec. • Heater wire break or short circuit. The gluing unit thermistor detected a temperature of less than 5C for more than 1 sec. (more than 10 sec. after power on). • Glue level thermistor (S58) broken • The AD value of the glue level thermistor (S58) remained at 1023 for 10 sec.	
		• Thermistor abnormal, wire breakage, short circuit, broken wire: Replace the gluing unit	

SC795-38	A	Temperature Detection Error	PB (D391)
		Low temperature detected while regulating glue temperature.	
		After adjustment of the glue temperature, the glue temperature thermistor (S56) detected a temperature lower than 135°C for more than 10 sec.	
		• Heater, glue temperature thermistor (S56) defective	
		Glue level thermistor: Error 1	
		The glue level thermistor detected a temperature higher than 170°C for longer than 10 sec. after the glue had warmed up.	
		• Glue level thermistor (S58) defective	
		Glue level thermistor: Error 2	
		The glue level thermistor detected a temperature higher than 100°C for longer than 10 sec. after the glue had warmed up.	
		• Glue level thermistor (S58) defective	

SC795-39	A	Protective Circuit Error	PB (D391)
		• The thermostat (THSW1) inside the gluing unit detected an abnormally high temperature. • Abnormal thermostat detection	
		• Glue heater defective • Thermostat defective	

SC795-40	A	Glue Surface Error 1	PB (D391)
		The surface of the glue in the vat did not reach the lower or upper limit position. This error is issued when the glue surface was detected below the lower limit position 4 times in succession during the glue re-supply cycle.	
		• Glue has clogged in the vat • Glue supply defective • Glue level thermistor (S58) defective	

SC795-41	A	Glue Surface Error 2	PB (D391)
		The glue surface has not dropped below the upper limit mark. Without a glue vat refill, the glue level thermistor could not detect the level of the glue below the upper limit (full) level, even after the application of 25.42 g of glue.	
		• Glue application abnormal (not applying correctly) • Glue level thermistor (S58) defective	

SC795-42	A	Glue Level Thermistor (S58) Adjustment Error	PB (D391)
		One of the following errors occurred in the adjustment data for the glue level thermistor: • Glue level thermistor 1 value (low limit) was out of the range: 128°C ±14°C) • Glue level thermistor 2 value (high limit) was out of the range: 142°C ±10°C) • Glue level thermistor adjustment value 1 was larger than for adjustment 1. • The difference between the values for adjustment 1 and 2 was less than 5°C.	
		• Slave control board connection loose, broken, defective • Slave control board defective	

SC795-43	A	Timing Sensor (S5) Adjustment Error	PB (D391)
		The value for the adjustment of the timing sensor exceeded the upper limit. When the A/D input for the timing sensor is lower than 3.0V to 3.5V, even if the timing sensor D/A output is as high as 3.5V, the A/D input value will not fall within the 3.0-to-3.5V range. -or- The value for the adjustment of the timing sensor was lower than the lower limit. When the A/D input for the timing sensor is higher than 3.0V to 3.5V, even if the timing sensor D/A output is as low as 0.1V, the A/D input value will not fall within the 3.0-to-3.5V range.	
		• Timing sensor defective • D/A converter defective • A/D converter defective	

SC795-44	A	Cover Registration Sensor (S21) Error	PB (D391)
		The value for the adjustment of the cover registration sensor was higher than or lower than the target range: 3V to 3.5V	
		• Cover registration sensor (S21) defective • D/A converter defective • A/D converter defective	

SC795-45	A	Cover Horizontal Registration Sensor: Small (S71)	PB (D391)
		The value for the adjustment of the cover registration sensor was higher than or lower than the target range: 3.2V to 3.5V	
		• Cover horizontal registration sensor: small (S71) defective • D/A converter defective • A/D converter defective	

SC795-46	A	Cover Horizontal Registration Sensor: Large (S72)	PB (D391)
		The value for the adjustment of the cover horizontal registration sensor (for large covers) was higher than or lower than the target range: 3.2V to 3.54V	
		• Cover Horizontal Registration Sensor: Large (S72) defective • D/A converter defective • A/D converter defective	

SC795-47	A	Book Exit Sensor (S64) Error	PB (D391)
		The value for the adjustment of the book exit sensor was higher than or lower than the target range: 3.2V to 3.54V	
		• Signature exit sensor defective • D/A converter defective • A/D converter defective	

SC795-48	A	Leading Edge Sensor (S65) Error	PB (D391)
		The value for the adjustment of the leading edge sensor was higher than or lower than the target range: 3.2V to 3.54V	
		• Leading edge sensor S65) defective • D/A converter defective • A/D converter defective	

SC795-49	A	Trim Unit Entrance Sensor (S92) Error	PB (D391)
		The value for the adjustment of the sensor was out of range.	
		• Trim unit entrance sensor (S92) harness loose, broken, defective • Sensor defective	

SC795-50	A	Book Registration Sensor (S88) Error	PB (D391)
		The value for the adjustment of the book registration sensor was out of range.	
		• Slide motor (M44) connections loose, broken, defective • Motor defective • Book registration sensor (S88) harness loose, broken, defective • Sensor defective	

SC795-51	A	LE Detection Sensor (S65) Error	PB (D391)
		No book could be detected in the path for trimming (the sensor could not detect a leading edge of a book).	
		• The book has slipped out of the grip of the book rotation plates	

SC795-52	A	Book Exit Sensor (S64) Error	PB (D391)
		No book could be detected at the entrance of the trimming unit. -or- The book did not arrive in the trimming unit because it jammed. (The trim unit entrance sensor (S92) did not go ON.)	
		• Main grip lift motor (M22) connections loose, broken, defective • Motor defective • Book exit sensor (S64) harness loose, broken, defective • Sensor defective	

SC795-53	A	Book Registration Sensor (S88) Error	PB (D391)
		A book was not detected at the book registration sensor pair (the book registration sensor did not go ON).	
		• Book jammed, failed to arrive at book registration sensor • Slide motor (M44) connections loose, broken, defective • Motor defective • Book registration sensor (S88) harness loose, broken, defective • Sensor defective • Sensor flag error, overload	

SC795-54	A	Book Exit Sensor (S64) Error	PB (D391)
		The book exit sensor went ON when the system was turned ON, indicating that a book was at the book exit sensor above the book grip and rotation unit.	
		• Book jammed at the entrance of the book grip and rotation unit. • Book exit sensor (S64) defective	

SC795-55	A	Exit Sensor (S64) Error	PB (D391)
		The slave control board could detect no paper at the entrance of the trimming unit. The entrance sensor did not detect the signature within 6860 ms from when the signature exited the gluing unit.	
		• Trim unit entrance sensor (S92) defective	

SC795-56	A	Main Grip Signature Sensor (S55) Error	PB (D391)
		No signature was detected in the gripper of the main grip unit. -or- No signature was detected in the main grip unit after the signature passed from the sub grip to the main grip.	
		• Main grip signature sensor (S55) defective	

SC795-57	A	Book Exit Sensor (S64) Error	PB (D391)
		The trim unit entrance sensor remained ON (when no book should have been present). -or- The trim unit entrance sensor (S92) went ON when the system was turned on. -or- The book exit sensor (S64) remained ON after jam removal.	
		• Book jam at power on • Main group lift motor (M22) connections loose, broken, defective • Motor defective • Book exit sensor (S64) harness loose, broken, defective • Sensor defective	

SC795-58	A	Book Registration Sensor (S92) Lag Error	PB (D391)
		The book registration sensor remained ON because the book did not move from the sensor location. -or- The book registration sensor went on when the system was turned on.	
		• Book jam above the trimmer unit • Slide motor (M44) connections loose, broken, defective • Motor defective • Book registration (S92) sensor harness loose, broken, defective • Sensor defective	

SC795-59	A	Book Arrival Sensor (S76) Lag Error	PB (D391)
		The book arrival sensor remained ON because the book did not leave the sensor location. The book remained in the book buffer area and failed to fall onto the book output tray.	
		• Slide motor (M44) connections loose, broken, defective • Motor defective • Book arrival sensor (S76) harness loose, broken, defective • Sensor defective	

SC795-60	A	Trimming Scrap Error	PB (D391)
		The trimming scraps did not fall from the trimmings buffer, or trimmings were jammed between the trimmings buffer and the book press plate. After retrieving the scraps after the 2nd cut (top edge) or 3rd cut (fore edge), the edge press plate sensor did not go ON.	
		• Trimming scraps have jammed in or around the trimmings buffer • Edge press plate motor (M36) connections loose, broken, defective • Motor defective • Edge press plate HP sensor (S90) harness loose, broken, defective • Sensor defective	

SC795-61	A	Sub Grip Signature Lag Error	PB (D391)
		The sub grip signature sensor remained ON because the signature failed to move out of the sub grip unit.	
		• Signature jam in the sub grip unit • Sub grip signature sensor (S39) defective (did not go OFF even with sub grip unit open and the signature removed)	

SC795-62	A	Main Grip Lag Jam	PB (D391)
		The main grip signature sensor remained ON because the book failed to move from the main grip unit to the trimming unit.	
		• Book jam in the main grip unit • Main grip signature sensor (S39) defective (did not go OFF even with the book removed)	

SC795-63	A	Signature Thickness Error	PB (D391)
		Signature thickness reading is smaller than the allowed minimum size. -or- Signature thickness reading is larger than the allowed maximum size. -or- The signature thickness reading did not change after the main grippers opened and closed.	
		• Signature thickness sensor (S50) defective.	

SC796-1	A	Glue Vat HP Sensor (S73) Error	PB (D391)
		The glue vat HP sensor at the rear of the bookbinder failed to go ON within the prescribed time. -or- The glue vat HP sensor at the rear of the bookbinder failed to go OFF.	
		• Glue vat motor (M32) defective • Glue vat HP sensor (S73) defective • Sensor connector loose, broken, defective	

SC796-2	A	Glue Vat Roller Rotation Error	PB (D391)
		The glue vat roller did not start rotating within the prescribed time.	
		• Glue vat roller motor (M25) defective • Glue vat roller rotation sensor (S59) defective • Sensor connector loose, broken, defective	

SC796-3	A	Glue Supply Motor (M33) Error	PB (D391)
		The glue supply motor did not arrive at its home position. The glue supply HP sensor (S75) did not turn ON within the prescribed time after the glue supply motor (S33) turned on. -or- The glue supply motor did not leave its home position.	
		• Glue pellet supply lock • Glue supply motor (M33) defective • Glue supply HP sensor (S75) defective • Sensor connector loose, broken, defective	

SC796-4	A	Spine Fold HP Sensor: Left (S60) Error	PB (D391)
		The spine fold plate did not reach the left HP sensor (the sensor did not go ON) within the prescribed time after the left spine fold plate motor turned on. -or- The spine fold plate did not leave the left HP sensor position (the sensor did not go OFF within the prescribed time).	
		• Spine fold plate motor: left (M28) defective • Spine fold HP sensor: left (S60) defective • Sensor connector loose, broken, defective	

SC796-5	A	Spine Fold Close Sensor: Left (S61) Error	PB (D391)
		The sensor did not turn ON within the prescribed time, or the sensor was already OFF when the spine fold plate was supposed to move from the closed to the open position. -or- The sensor did not go OFF within the prescribed time after the spine fold plate motor: left turned on to open the spine fold plate, or the sensor was already ON when the spine fold plate was supposed to move from the open to the closed position.	
		• Spine fold plate motor: left (M28) defective • Spine fold close sensor: left (S61) defective • Sensor connector loose, broken, defective	

SC796-6	A	Dual Spine Plate Sensor Error: Left	PB (D391)
		The spine plate HP sensor (S60) and spine plate close sensor (S63) turned ON at the same time.	
		• Spine fold HP sensor: left (S60) defective • Spine fold close sensor (S63) defective • A sensor connector loose, broken, defective	

SC796-7	A	Spine Fold HP Sensor: Right (S66) Error	PB (D391)
		The spine fold plate did not reach the right HP sensor within the prescribed time (sensor did not go ON) after the spine fold plate motor (M29) turned on to open the fold plate, or the right HP sensor was already OFF when the spine fold plate was supposed to move from the open to the closed position. -or- The spine fold plate did not leave the right HP sensor position (sensor did not go OFF) within the prescribed time after the spine fold motor: right turned on to close the fold plate.	
		• Spine fold motor: right (M29) defective • Spine fold HP sensor: right (S66) defective • Connector loose, broken, defective	

SC796-8	A	Spine Fold Close Sensor: Right (S69) Error	PB (D391)
		The right fold plate close sensor did not go ON within the prescribed time after the spine fold plate motor: right turned on to close the fold plate, or the close sensor on the right was already OFF when the spine fold plate was supposed to close the plate. -or- The right spine fold plate close sensor did not go OFF within the prescribed time after the spine fold plate motor: right turned on to open the plate, or the spine fold page close sensor on the right was already ON when the spine fold plate was supposed to move from the open to the closed position.	
		• Spine fold motor: right (M29) defective • Spine fold close sensor: right (S69) defective • Sensor connector loose, broken, defective	

SC796-9	A	Dual Spine Plate Sensor Error: Right	PB (D391)
		The spine fold HP sensor: right (S66) and spine fold close sensor: right (S69) turned ON at the same time.	
		• Spine fold HP sensor: right (S66) defective • Spine fold close sensor: right (S69) defective • Sensor connector loose, broken, defective	

SC796-10	A	Spine Plate Open Sensor (S62) Error	PB (D391)
		The spine plate open sensor did not go ON within the prescribed time after the spine plate motor turned on to open the plate. -or- The spine plate open sensor did not go OFF within the prescribed time after the spine plate motor turned on to close the plate.	
		• Spine plate motor (M26) defective • Spine plate open sensor (S62) defective • Sensor or motor connector loose, broken, defective	

SC796-11	A	Spine Plate Closed Sensor (S63)	PB (D391)
		The spine plate close sensor did not go ON within the prescribed time after the spine plate motor turned on to close the plate. -or- The spine plate close sensor did not go OFF within the prescribed time after the spine plate motor turned on to open the plate.	
		• Spine plate motor (M26) defective • Spine plate closed sensor (S63) defective • Motor or sensor connector loose, broken, defective	

SC796-12	A	Front Door Lock Error	PB (D391)
		The right front door sensor did not go OFF even though the front doors closed and locked. -or- The right front door sensor did not go ON even though the front doors released and opened.	
		• The right front door solenoid (SOL3) defective • Right front door sensor (S30) defective • One or more of the front door switches (MSW1, 2, 4, 5, 6, 7) is defective • Solenoid, sensor, or MSW connector loose, broken, defective	

SC796-13	A	Switchback Flapper HP Sensor (S10) Error	PB (D391)
		The switchback flapper HP sensor in the stacking tray did not go ON after the motor turned on long enough to raise the flapper through an arc of 50 degrees. -or- The switchback flapper HP sensor did not go OFF after the motor remained on long enough to lower the flapper through an arc of 150 degrees.	
		• Switchback flapper HP sensor (S10) defective • Switchback flapper motor (M8) defective • Sensor or motor connector loose, broken, defective	

SC796-14	A	TE Press Lever HP Sensor (S3) Error	PB (D391)
		The TE press lever HP sensor in the stacking tray did not go ON the TE press lever motor remained on long enough to move the lever through and arc of 30 degrees to release the lever. -or- The TE press lever HP sensor did not go OFF when the TE press lever motor remained on long enough to move the lever through and arc of 20 degrees to close the lever.	
		• TE press lever HP sensor (S3) defective • TE press lever motor (M3) defective • Sensor or motor connector loose, broken, defective	

SC796-15	A	Jog Fence HP Sensor: Front/Small (S12) Error	PB (D391)
		The front jog fence HP sensor in the stacking tray for small size paper did not go ON within the prescribed time after the front jogger motor turned on long enough to move the fence front jog fence. -or- The front jog fence HP sensor for small size paper did not go OFF within the prescribed time after the front jogger motor turned on to move the front fence.	
		• Jog fence HP sensor: front/small (S12) defective • Jogger motor: front (M4) defective • Sensor or motor connector loose, broken, defective	

SC796-16	A	Jog Fence HP Sensor: Front/Large (S14) Error	PB (D391)
		The front jog fence HP sensor for large size paper in the stacking tray did not go ON within the prescribed time after the front jogger motor turned on to move the front fence. -or- The front jog fence HP sensor for large size paper in the stacking tray did not go OFF within the prescribed time after the front jogger motor turned on to move the front fence.	
		• Jog fence HP sensor: front/large (S14) defective • Jogger motor: front (M4) defective • Sensor or motor connector loose, broken, defective	

SC796-17	A	Jog Fence HP Sensor: Rear/Small (S13) Error	PB (D391)
		The rear jog fence HP sensor for small size paper in the stacking tray did not go ON within the prescribed time after the rear jogger motor turned on to move the rear fence. -or- The rear jog fence HP sensor for small size paper in the stacking tray did not go OFF within the prescribed time after the rear jogger motor turned on to move the rear fence.	
		• Jog fence HP sensor: rear/small (S13) defective • Jogger motor: rear (M5) defective • Sensor or motor connector loose, broken, defective	

SC796-18	A	Jog Fence HP Sensor: Rear/Large (S15) Error	PB (D391)
		The rear jog fence HP sensor for large size paper in the stacking tray did not go ON after the rear jogger motor turned on to move the rear fence. -or- The rear jog fence HP sensor for large size paper in the stacking tray did not go OFF after the rear jogger motor turned on to move the rear fence.	
		• Jog fence HP sensor: rear/large (S15) defective • Jogger motor: rear (M5) defective • Sensor or motor connector loose, broken, defective	

SC796-19	A	Switchback Roller HP Sensor (S11) Error	PB (D391)
		The switchback roller HP sensor in the stacking tray did not go ON after the motor turned on long enough to raise the roller through an arc of 40 degrees. -or- The switchback roller HP sensor in the stacking tray did not go OFF after the motor turned on long enough to lower the roller through an arc of 20 degrees.	
		• Switchback roller HP sensor (S11) defective • Switchback roller motor (M7) defective • Sensor or motor connector loose, broken, defective	

SC796-20	A	Stacking Tray Lower Limit Sensor (S7) Error	PB (D391)
		Stacking tray lower limit sensor did not go ON within the prescribe time after the stacking tray lift motor turned to lower the tray. -or- Stacking tray lower limit sensor did not go OFF within the prescribed time after the stacking tray lift motor turned on to raise tray.	
		• Stacking tray lower limit sensor (S7) defective • Stacking tray lift motor (M2) defective • Sensor or motor connector loose, broken, defective	

SC796-21	A	Paper Detection Sensor: Fron/Rear (S1/S2) Error	PB (D391)

		The paper detection sensor at the front of the stacking tray did not go ON within the prescribed time after the stacking tray overflow sensor (S6) went ON and the stacking tray lift motor turned on to raise the tray. -or- The paper detection sensor at the front of the stacking tray did not go OFF within the prescribed time after the stacking tray lift motor turned on to lower the tray. -or- The paper detection sensor at the rear of the stacking tray did not go ON within the prescribed time after the stacking tray overflow sensor (S6) went ON and the stacking tray lift motor turned on to raise the tray. -or- The paper detection sensor at the rear of the stacking tray did not go OFF within the prescribed time after the stacking tray lift motor turned on to lower the tray
		• Paper Detect Sensor: Front (S1) defective • Stacking Tray Lift Motor (M2) defective • Sensor or motor connector loose, broken, defective

SC796-22	A	Stacking Tray Overflow Sensor (S6) Error	PB (D391)
		The stacking tray overflow sensor did not go ON within the prescribed time after the stacking tray lift motor turned on to raise the tray. -or- The stacking tray overflow sensor did not go OFF within the prescribed time after the stacking tray lift motor turned on to lower the tray.	
		• Stacking Tray Overflow Sensor (S6) defective • Stacking Tray Lift Motor (M2) defective • Sensor or motor connector loose, broken, defective	

SC796-23	A	Dual Stacking Tray Errors	PB (D391)
		The Stacking Tray Lower Limit Sensor (S7) and Stacking Tray Overflow Sensor (S6) went ON at the same time.	
		• Stacking Tray Lower Limit Sensor (S7) defective • Stacking Tray Overflow Sensor (S6) defective • Sensor connector loose, broken, defective	
		The Stacking Tray Overflow Sensor (S6) went OFF when the stacking tray was raised to its upper limit. When the tray was raised, the stacking tray overflow sensor (S6) went OFF and: (1) the stacking tray empty sensor (S8) was OFF and (2) one or both the paper detect sensors (S1: Front/S2: Rear) were ON.	
		• Stacking Tray Empty Sensor (S8) defective • Paper Detect Sensors: Front/Rear (S1/S2) defective • Stacking Tray Overflow Sensor (S6) defective • Stacking Tray Lift Motor (M2) defective • Sensor or motor connector loose, broken, defective	

SC796-24	A	Stacking Tray HP Sensor (S9) Error	PB (D391)
		The stacking tray HP sensor did not go ON within the prescribed time after the stacking tray motor turned on to move the tray toward the sensor. -or- The stacking tray HP sensor did not go ON within the prescribed time after the stacking tray motor turned on to move the tray away from the sensor.	
		• Stacking HP Sensor (S9) defective • Stacking Tray Motor (M9) defective • Sensor or motor connector loose, broken, defective	

SC796-25	A	Stacking Weight HP Sensor (S16) Error	PB (D391)
		The stacking weight HP sensor did not go ON within the prescribed time the stacking weight motor turned on to move the tray toward the sensor. -or- The stacking tray HP sensor did not go OFF within the prescribed time when the stacking tray motor turned on to move the tray away from the sensor.	
		• Stacking weight HP sensor did not go ON. • Stacking Weight HP Sensor (S16) defective • Stacking Weight Motor (M6) defective • Sensor or motor connector loose, broken, defective	

SC796-26	A	Left Cover Guide Error	PB (D391)
		The left cover guide HP sensor did not go ON within the prescribed time after the left cover guide motor turned on.	
		• Cover Guide HP Sensor: Left (S27) defective • Cover Guide Motor: Left (M15) defective • Sensor or motor connector loose, broken, defective	
		The left cover guide open sensor did not go ON within the prescribed time after the left cover guide motor turned on to retract the left cover guide.	
		• Cover Guide Open Sensor: Left (S28) defective • Cover Guide Motor: Left (M15) defective • Sensor or motor connector loose, broken, defective	

SC796-27	A	Left Cover Guide Dual Sensor Errors	PB (D391)
		Cover Guide HP Sensor: Left (S27) and Cover Guide Open Sensor: Left (S28) went ON at the same time.	
		• Cover Guide HP Sensor: Left (S27) defective • Cover Guide Open Sensor: Left (S28) defective • Sensor connector loose, broken, defective	

SC796-28	A	Right Cover Guide Error	PB (D391)
		The right cover guide HP sensor did not go ON within the prescribed time after the right cover guide motor turned on.	
		• Cover Guide HP Sensor: Right (S22) defective • Cover Guide Motor: Right (M16) defective	
		The cover guide open sensor: right did not go ON within the prescribed time after the right cover guide motor turned on to move the right cover guide to the home position.	
		• Cover Guide HP Sensor: Right (S23) defective • Cover Guide Motor: Right (M16) defective	

SC796-29	A	Right Cover Guide Dual Sensor Errors	PB (D391)
		Cover Guide HP Sensor: Right (S22) and Cover Guide Open Sensor: Right (S23) went ON at the same time.	
		• Cover Guide HP Sensor: Right (S23) defective • Cover Guide Open Sensor: Right (S23) defective • Sensor connector loose, broken, defective	

SC796-30	A	Cover Registration HP Error	PB (D391)
		Cover Registration HP Sensor: Small/Large (S71, S72) did not go ON within the prescribed time after the cover horizontal registration motor turned on. -or- Cover Registration HP Sensor: Small/Large (S71, S72) did not go OFF within the prescribed time after the cover horizontal registration motor turned on.	
		• Cover Horizontal Registration Motor (M31) defective • Cover Horizontal Registration Sensor: Small/Large (S71, S72) defective • Sensor or motor connector loose, broken, defective	

SC796-31	A	Sub Grip HP Sensor (S37) Error	PB (D391)
		The sub grip HP sensor did not go ON within the prescribed time after the sub grip lift motor turned on to raise the sub grip unit. -or- The sub grip HP sensor did not go OFF within the prescribe time after the sub grip lift motor turned on to lower the sub grip unit.	
		• Sub Grip Lift Motor (M17) defective • Sub Grip HP Sensor (S37) defective • Sensor or motor connector loose, broken, defective	

SC796-32	A	Sub Grip Size HP Sensor (S38) Error	PB (D391)
		The sub grip size HP sensor did not go ON within the prescribed time after the sub grip size motor turned on for horizontal adjustment to the paper size. -or- The sub grip size HP sensor was already OFF when the sub grip size horizontal adjustment started (from the open to closed position).	
		• Sub Grip Size Motor (S19) defective • Sub Grip Size HP Sensor (S38) defective • Motor or sensor connector loose, broken, defective	
		The sub grip size HP sensor did not go OFF within the prescribed time after the sub grip size motor turned on to close sub grippers for horizontal adjustment of the paper size. -or- The sub grip size HP sensor was already ON when the sub grip size horizontal adjustment started (from the close to open position).	
		• Sub Grip Size Motor (S19) defective • Sub Grip Size HP Sensor (S38) defective • Motor or sensor connector loose, broken, defective	

SC796-33	A	Sub Grip Open Sensor (S40) Error	PB (D391)
		The sub grip open sensor did not go ON within the prescribed time after the sub grip lift motor turned on to open the sub grip unit. -or- The sub grip open sensor did not go OFF within the prescribed time after the sub grip lift motor turned on to close the sub grip unit.	
		• Sub Gripper Motor (M20) defective • Sub Grip Open Sensor (S40) defective • Motor or sensor connector loose, broken, defective	

SC796-34	A	Sub Grip Close Sensor (S41) Error	PB (D391)
		The sub grip close sensor did not go ON within the prescribed time after the sub grip lift motor turned on to close the sub grip unit. -or- The sub grip close sensor did not go OFF within the prescribed time after the sub grip open motor turned on to open the sub grip unit.	
		• Sub Gripper Motor (M20) defective • Sub Grip Close Sensor (S41) defective • Motor or sensor connector loose, broken, defective	

SC796-35	A	Sub Grip Dual Sensor Error	PB (D391)
		The Sub Grip Open Sensor (S40) and Sub Grip Close Sensor (S41) went ON at the same time.	
		• Sub Grip Open Sensor (S40) defective • Sub Grip Close Sensor (S41) defective • A sensor connector loose, broken, defective	

SC796-36	A	Signature HP Sensor (S34) Error	PB (D391)
		The signature HP sensor did not go ON within the prescribed time after the signature move motor turned on to move the sub grip to the home position. -or- The signature HP sensor did not go OFF within the prescribed time after the signature move motor turned on to move the sub grip to the signature transfer position (from sub grip to main grip).	
		• Signature Move Motor (M18) defective • Signature HP Sensor (S34) defective • Connector loose, broken, defective	

SC796-37	A	Signature Main Grip Position Sensor (S35) Error	PB (D391)
		The signature main grip position sensor did not go ON within the prescribed time after the signature move motor turned for delivery of the signature from the sub grip to the main grip. -or- Due to incorrect timing during delivery of the signature from sub grip to main grip, the signature was gripped at the main grip HP sensor position.	
		• Signature Move Motor (M18) defective • Signature Main Grip Position Sensor (M35) defective • Motor or sensor connector loose, broken, defective	
		The signature HP sensor did not go OFF within the prescribed time after the signature move motor turned on to move the sub grip to the home position.	
		• Signature Move Motor (M18) defective • Signature Main Grip Position Sensor (M35) defective • Motor or sensor connector loose, broken, defective	

SC796-38	A	Main Grip Rotate Enable Sensor (S36) Error	PB (D391)
		The main grip rotate enable sensor did not go ON within the prescribe time after the signature move motor turned on to move the sub grip to the home position. -or- The main grip rotate enable sensor did not go OFF within the prescribed time after the signature move motor turned on to move the sub grip to the signature transfer position (from sub grip to main grip).	
		• Signature Move Motor (M18) defective • Main Grip Rotate Enable Sensor (S36) defective • Motor or sensor connector loose, broken, defective	

SC796-39	A	Sub Grip Dual Sensor Error	PB (D391)
		The Signature HP Sensor (S34) and Signature Main Grip Position Sensor (S35) went ON at the same time.	
		• Signature HP Sensor (S34) defective • Signature Main Grip Position Sensor (M35) defective • A sensor connector loose, broken, defective	

SC796-40	A	Main Grip HP Sensor (S44) Error	PB (D391)
		The main grip HP sensor did not go ON within the prescribe time after the main grip lift motor turned on to raise the main grip unit, or the main grip HP sensor was already ON when the motor started to lower the main grip unit. -or- The main grip HP sensor did not go OFF within the prescribed time after the main grip lift motor turned on to lower the main grip unit, or the main grip HP sensor was already ON when the motor started to lower the main grip unit.	
		• Main Grip Lift Motor (M22) defective • Main Grip HP Sensor (S44) Error • Motor or sensor connector loose, broken, defective	

SC796-41	A	Main Grip Press Sensor 1 (M48)Error	PB (D391)
		The main grip press sensor 1 did not go ON within the prescribed time after the main grip lift motor turned on to raise the main grip unit from the main grip signature registration position. -or- The main grip press sensor 1 did not go OFF within the prescribed time after the main grip lift motor turned on to lower the main grip unit to the main grip signature registration position.	
		• Main Grip Lift Motor (M22) defective • Main Grip Press Sensor 1 (S48) defective • Connector loose, broken, defective	

SC796-42	A	Main Grip Press Sensor 2 (S49) Error	PB (D391)
		The main grip press sensor 2 did not go ON within the prescribed time after the main grip lift motor turned on to lower the main grip unit and signature to the point where the signature was to be pressed into the center of the cover. -or- The main grip press sensor 2 did not go OFF within the prescribed time after the main grip lift motor turned on to raise the main grip unit away from the point where the signature was pressed into the center of the cover.	
		• Main Grip Lift Motor (M22) defective • Main Grip Press Sensor 2 (S49) defective • Motor or sensor connector loose, broken, defective	

SC796-43	A	Main Grip Signature Exit Error	PB (D391)
		The signature exit sensor did not go ON after the main grip lift motor moved the signature to the delivery point when the signature was passed from the main grip unit to the signature exit roller.	
		• Main Grip Lift Motor (M22) defective • Signature Exit Sensor (S64) defective • Signature broken, bent • Signature stuck in the main grip unit	

SC796-44	A	Main Grip HP Sensor: High (S45) Error	PB (D391)
		The main grip high HP sensor did not go ON within the prescribed time after the main grip lift motor turned on to raise the main grip unit. -or- The main grip high HP sensor did not go OFF within the prescribed time after the main grip lift motor turned on to lower the main grip unit.	
		• Main Grip Lift Motor (M22) defective • Main Grip HP Sensor: High (S45) defective • Motor or sensor connector loose, broken, defective	

SC796-45	A	Main Grip Rotate HP Sensor (S43) Error	PB (D391)
		The main grip rotate HP sensor did not go ON within the prescribed time after the main grip rotation motor turned to rotate the main grip unit for delivery of the signature from the sub grip unit. -or- The main grip rotate HP sensor did not go OFF with the prescribed time after the main grip rotation motor turned on to rotate the grip unit and signature to the vertical.	
		• Main Grip Rotation Motor (M21) defective • Main Grip Rotate HP Sensor (S43) defective • Motor or connector loose, broken, defective	

SC796-46	A	Rotate-to-Binding Position Sensor (S42) Error	PB (D391)
		The main grip rotate-to-binding position sensor did not go ON within the prescribed time after the main grip rotation motor turned on to rotate the grip unit and signature to the vertical. -or- The main grip rotate to binding position sensor did not go OFF within the prescribed time after the main grip rotation motor turned to rotate the main grip unit to the left for delivery of the signature from the sub grip unit.	
		• Main Grip Rotation Motor (M21) defective • Rotate to Binding Position Sensor (S42) defective • Motor or sensor connector loose, broken, defective	

SC796-47	A	Main Grip Rotation Dual Sensor Errors	PB (D391)
		Main Grip Rotate HP Sensor (S43) and Rotate-to-Binding Position Sensor (S42) went ON at the same time.	
		• Main Grip Rotate HP Sensor (S43) defective • Rotate to Binding Position Sensor (S42) defective • Sensor connector loose, broken, defective	

SC796-48	A	Main Grip Open/Close Sensor: Rear (S47, S48)	PB (D391)
		The rear main grip open sensor did not go ON within the prescribed time after the rear grip motor turned on to open the main grip unit. -or- The rear main grip open sensor did not go OFF within the prescribed time after the rear grip motor turned on to close the main grip unit.	
		• Grip Motor: Rear (M23) defective • Main Grip Open Sensor: Rear (S47) defective • Motor or sensor connector loose, broken, defective	

		The rear main grip close sensor did not go ON within the prescribed time after the rear grip motor turned on to close the main grip unit. -or- The rear main grip close sensor did not go OFF within the prescribed time after the rear grip motor turned on to open the main grip unit.
		• Grip Motor: Rear (M23) defective • Main Grip Close Sensor: Rear (S54) defective • Motor or sensor connector loose, broken, defective

SC796-49	A	Main Grip Encoder: Rear Sensor (S46) Error	PB (D391)
		The rear main grip encoder sensor could not be detected ON/OFF within the prescribed time after the rear grip motor turned on to open and close the main grip unit.	
		• Grip Motor: Rear (M23) defective • Main Grip Encoder: Rear Sensor (S46) defective • Motor or sensor connector loose, broken, defective	

SC796-50	A	Rear Main Group Dual Sensor Error	PB (D391)
		Main Grip Open Sensor: Rear (S47) and Main Grip Close Sensor: Rear (S48) went ON at the same time.	
		• Main Grip Open Sensor: Rear (S47) defective • Main Grip Close Sensor: Rear (S48) defective • A sensor connector loose, broken, defective	

SC796-51	A	Main Grip Open/Close Sensor: Front (S51, S53)	PB (D391)

		The front main grip open sensor did not go ON within the prescribed time after the front grip motor turned on to open the main grip unit. -or- The front main grip open sensor did not go OFF within the prescribed time after the front grip motor turned on to close the main grip unit.
		• Grip Motor: Front (M24) defective • Main Grip Open Sensor: Front (S51) defective • Motor or sensor connector loose, broken, defective
		The front main grip close sensor did not go ON within the prescribed time after the front grip motor turned on to close the main grip unit. -or- The front main grip close sensor did not go OFF within the prescribed time after the front grip motor turned on to open the main grip unit.
		• Grip Motor: Front (M24) defective • Main Grip Close Sensor: Front (S53) defective • Motor or sensor connector loose, broken, defective

SC796-52	A	Main Grip Encoder: Front Sensor (S52) Error	PB (D391)
		The front main grip encoder sensor could not be detected ON/OFF within 200 ms after the front grip motor turned on to open/close the main grip unit.	
		• Main Grip Encoder: Front Sensor (S52) defective • Grip Motor: Front (M24) defective • Main Grip Encoder: Front Sensor (S52) defective • Sensor or motor connector loose, broken, defective	

SC796-53	A	Front Main Group Dual Sensor Error	PB (D391)
		Main Grip Open Sensor: Front (S51) and Main Grip Close Sensor: Front (S53) went ON at the same time.	
		• Main Grip Open Sensor: Front (S51) defective • Main Grip Close Sensor: Front (S53) defective • Sensor connector loose, broken, defective	

SC796-54	A	Signature Exit Path HP Sensor (S67) Error	PB (D391)
		The signature exit path HP sensor did not go ON within the prescribed time after the signature exit path motor turned on to retract the signature exit roller. -or- The signature exit path HP sensor did not go OFF within the prescribed time after the signature exit path motor turned on to move the signature exit roller.	
		• Signature Exit Path Motor (M30) defective • Signature Exit Path HP Sensor (S67) defective • Motor or sensor connector loose, broken, defective	

SC796-55	A	Signature Exit Path Press Sensor (S68) Error	PB (D391)
		The signature exit path press sensor did not go ON within the prescribed time after the signature exit path motor turned on to feed the book into the nip of the signature exit roller. -or- The signature exit path press sensor did not go OFF within the prescribed time after the signature exit path motor turned on to retract the signature exit roller.	
		• Signature Exit Path Motor (M30) defective • Signature Exit Path Press Sensor (S68) defective • Motor or sensor connector loose, broken, defective	

SC796-56	A	Signature Exit Roller Error	PB (D391)
		The leading edge sensor did not go ON within the time prescribed for the signature exit roller to reverse feed the signature during signature exit.	
		• Signature Roller Exit Motor (M27) defective • Leading Edge Sensor (S65) defective • Signature torn, bent	

SC796-57	A	Inserter EEPROM Error	PB (D391)
		CHECKSUM error at power on. -or- EEPROM write error.	
		• EEPROM not installed, or not installed correctly • EEPROM defective	

SC796-58	A	Inserter Drive Switch Sensor (S16) Error	PB (D391)
		The drive switch sensor in the inserter did not go OFF within the time prescribed after the drive switch motor (M2) turned on. -or- The drive switch sensor in the inserter did not go ON within the time prescribed after the drive switching motor (M2) turned on.	
		• Drive switch motor (M2) defective • Drive switch sensor (S16) defective • Motor or sensor connector loose, broken, defective • Connector loose, broken, defective	

SC796-59	A	Inserter Tray A Error	PB (D391)
		Inserter Tray A (upper tray) failed to leave its lower limit sensor within the prescribed time after Tray A lift motor turned on.	
		• Lift Motor: Tray A (M3) defective • Lower Limit Sensor: Tray A (S11) defective • Motor or sensor connector loose, broken, defective	
		Inserter Tray A (upper tray) failed to arrive at its paper feed sensor within the prescribed time after the Tray A lift motor turned on.	
		• Lift Motor: Tray A (M3) defective • Paper Feed Sensor: Tray A (S4) defective • Motor or sensor connector loose, broken, defective	

SC796-60	A	Inserter Tray B Error	PB (D391)
		Inserter Tray B (lower tray) failed to leave its lower limit sensor within the prescribed time after the Tray B lift motor turned on.	
		• Lift Motor: Tray B (M4) defective • Lower Limit Sensor: Tray B (S12) defective • Motor or sensor connector loose, broken, defective	
		Inserter Tray B (lower tray) failed to arrive at its paper feed sensor within the prescribed time after the Tray B lift motor turned on.	
		• Lift Motor: Tray B (M4) defective • Paper Feed Sensor: Tray B (S10) defective • Motor or sensor connector loose, broken, defective	

SC796-61	A	Relay Unit EEPROM Error	PB (D391)
		EEPROM write error (successful completion of data write operation not detected within the prescribed time).	
		• Relay board EEPROM not installed, or installed incorrectly • EEPROM damaged • Relay board defective	

SC796-62	A	Relay/ Bookbinder Communication Error	PB (D391)
		Communication error between relay unit and bookbinder.	
		• Relay I/F cable disconnected or damaged • Relay unit PCB in bookbinder damaged, not installed correctly • PCB in relay unit damaged, not installed correctly	

SC796-63	D	Lower Performance Mode Error	PB (D391)
		These are the conditions that must be met before the bookbinder enters low performance mode: • The location where the error occurred has no effect on the operation of the horizontal feed path for downstream delivery. • The jam has occurred in the horizontal feed path but it can be removed easily. • The unit where the error occurred allows use of the horizontal feed path. • These conditions determine whether downstream delivery is possible after an error occurs in the bookbinder.	
		Correct the problem and release the bookbinder from the low performance mode. See Section 3 of the Perfect Binder manual for more about how to release the Perfect Binder from the low performance mode.	

SC797-1	B	Grip HP Sensor (S93) Error	PB (D391)
		The grip HP sensor did not go OFF within the prescribed time because the main grip did not leave its home position. -or- The main grip unit did go ON because it did not arrive at the HP position after signature release.	
		• Book grip motor (M43) defective • Grip HP sensor (S93) defective • Sensor or motor harness loose, broken, defective	

SC797-2	B	Grip End Sensor (S94) Error	PB (D391)
		The grip end sensor (S94) did not go OFF after the grip unit released the signature and moved the prescribed distance.	
		• Book grip motor (M43) defective • Grip end sensor (S94) defective • Sensor or motor harness loose, broken, defective	
		The grip end sensor (S94) did not go ON because the grip unit did arrive at the sensor position.	
		• Book grip motor (M43) defective • Grip end sensor (S94) defective • Sensor or motor harness loose, broken, defective • Data received for signature data was incorrect.	

SC797-3	B	Trimmings Buffer HP Sensor: Left (S103) Error	PB (D391)
		The trimmings buffer sensor: left (S103) did not go OFF within the prescribed time because it failed to leave the HP sensor. -or- The trimmings buffer sensor: left (S103) did not go ON within the prescribed time because it failed to arrive at the HP sensor.	
		• Trimmed scraps in or around the trimmings buffer • Trimmings buffer motor (M37) defective • Left trimmings buffer sensor (S103) defective • Sensor or motor harness loose, broken, defective	

SC797-4	B	Trimmings Buffer HP Sensor: Right (S100) Error	PB (D391)
		Trimmings buffer did not reach the trimmings dump port because: The trimmings buffer sensor: right (S100) did not go OFF within the prescribed time because it failed to leave the HP sensor. -or- The trimmings buffer sensor: right (S103) did not go ON within the prescribed time because it failed to arrive at the HP sensor.	
		• Trimmed scraps in or around the trimmings buffer • Trimmings buffer motor (M37) defective • Right trimmings buffer sensor (S100) defective • Sensor or motor harness loose, broken, defective	

SC797-5	B	Trimmings Buffer Motor (M37) Error	PB (D391)
		Trimmings buffer motor (M37) is not running.	
		• Trimming scrap jam • Trimmings buffer motor (M37) defective • Right or left trimmings buffer sensor (S100, S103) defective • Motor or sensor connections loose, broken, defective	

SC797-6	B	Failure to Detect Book Press Plate Position	PB (D391)
		The book press plate sensor (S104) did not go OFF because the trimmings buffer left the HP sensor position. -or- The book press plate sensor (S104) did not go ON because the trimmings buffer did not arrive at the HP sensor position.	
		• Trimming scraps jammed in or around the trimmings buffer • Trimmings buffer motor (M37) defective • Book press plate sensor (S104) defective • Sensor or motor harness loose, broken, defective	

SC797-7	B	Book Buffer Tray HP Sensor (S78) Error	PB (D391)
		The HP sensor did not go OFF within the prescribed time after the buffer tray the book buffer tray motor turned on to pull the tray to the rear. -or- The HP sensor did not go ON within the prescribed time after the book buffer tray motor turned on to push the tray to the front.	
		• Book has jammed on the rail of the buffer • Buffer tray overloaded • Book buffer tray motor (M39) defective • Book buffer tray HP sensor (S78) defective • Motor or sensor connection loose, broken, defective	

SC797-8	B	Edge Press Plate HP Sensor (S90)	PB (D391)
		The edge press plate did not go OFF within the prescribed time after the edge press plate motor turned on to press the plate against the spine of the book. -or- The edge press plate did not go ON within the prescribed time after the edge press plate motor turned on to pull the plate away the spine of the book.	
		• Edge press plate motor (M36) defective • Edge press plate HP sensor (S90) defective • Motor or sensor connection loose, broken, defective	

SC797-9	B	Press end Sensor (S87) Error	PB (D391)
		The press end HP sensor did not go OFF within the time prescribed for press END. -or- Press end sensor went OFF after press end sensor went ON and stopped the press motor (M36).	
		• Edge press plate motor (M36) defective • Press end sensor (S87) defective • Data received for signature data was incorrect because signature thickness sensor (S50) defective • Motor or sensor harness loose, broken, defective	

SC797-10	B	Slide HP Sensor (S82) Error	PB (D391)
		The HP sensor did not go OFF within the prescribed time because the slide motor did not leave the home position. -or- The HP sensor did not go ON within the prescribed time because the slide motor did not arrive at the home position.	
		• Signature jam, overload • Slide motor (M44) defective • Slide HP sensor (S82) defective • Motor or sensor harness loose, broken, defective	

SC797-11	B	Book Rotation HP Sensor 1 (S95) Error	PB (D391)
		Book rotation sensor 1 did not go OFF because the book rotation motor 1 (M41) did not leave the home position. -or- Book rotation sensor 1 did not go ON because the book rotation motor 1 (M41) did not arrive at the home position. -or- At power on, book rotation motor 1 failed to rotate the left plate through the prescribed arc for initialization.	
		• Jam or overload during book rotation • Book rotation motor 1 (M41) defective • Book rotation HP sensor 1 (S95) defective • Motor or sensor harness loose, broken, defective	

SC797-12	B	Book Rotation HP Sensor 2 (S91)	PB (D391)
		Book rotation sensor 2 did not go OFF because the book rotation motor 1 (M42) did not leave the home position. -or- Book rotation sensor 1 did not go ON because the book rotation motor 1 (M42) did not arrive at the home position. -or- At power on, book rotation motor 1 failed to rotate the left plate through the prescribed arc for initialization. Jam or overload during book rotation	
		• Book rotation motor 1 (M42) defective • Book rotation HP sensor 1 (S91) defective • Motor or sensor harness loose, broken, defective	

SC797-13	B	Cutter Motor (M35) Error	PB (D391)
		The blade in the trimming unit did not move from the home position or reach the blade cradle during cutting.	
		• Blade is dull, cutting poorly • Cutter motor (M35) defective • Blade sensor 1, blade sensor 2 defective • Motor or sensor harness loose, broken, defective	
		Note: Blade sensors 1 and 2 (S84, S85) are mounted on the cutter control board.	

SC797-14	B	Book Lift Tray HP Sensor (S79) Error	PB (D391)
		The book tray lift HP sensor did not go OFF within the prescribed time after the book tray lift motor (M38) turned on to raise the tray and receive a finished book from the trimming unit. -or- The book tray lift HP sensor did not go ON within the prescribed time after the book tray lift motor (M38) turned on to lower the tray and book.	
		• Book jammed under the tray • Book tray lift motor (M38) defective • Book lift tray HP sensor (S79) defective • Motor or sensor harness loose, broken, defective	

SC797-15	B	Book Lift Tray Motor (M38) Error	PB (D391)
		The book lift tray motor was not rotating.	
		• Book lift tray motor (M38) locked, blocked by the press plate or a jammed book • Motor defective • Book lift tray HP sensor (S79) defective • Motor or sensor harness loose, broken, defective	

SC797-16	B	Book Buffer Tray HP Sensor (S78) Error	PB (D391)
		The book collection buffer tray HP sensor did not go OFF within the prescribed time after the book buffer tray motor (M39) turned on to raise the tray. -or- The book collection buffer tray HP sensor did not go ON within the prescribed time after the book buffer tray motor (M39) turned on to lower the tray.	
		• Book buffer tray overloaded. • Book buffer tray motor (M39) defective • Book buffer tray HP sensor (M78) defective • Motor or sensor harness loose, broken, defective	

SC797-17	B	Blade Cradle HP Sensor (S83) Error	PB (D391)
		The blade cradle HP sensor did not go OFF within the prescribed time after the blade cradle motor (M40) turned on to raise it. -or- The blade cradle HP sensor did not go ON within the prescribed time after the blade cradle motor (M40) turned on to lower it.	
		• Edge press plate or cutter interfered with movement of the blade cradle • Blade cradle motor (M40) defective • Blade cradle HP sensor (S83) defective • Motor or sensor harness loose, broken, defective	

SC797-18	B	Book Door Lock Solenoid (SOL5) Error	PB (D391)
		The book stack door is locked but the book door sensor (S98) did not go OFF.	
		• Book door sensor (S98) defective • Book door lock solenoid (SOL5) defective • Solenoid or sensor harness loose, broken, defective	

SC797-19	B	Glue Heater (HTR1) Error	PB (D391)
		The heater failed to start because: 600 sec. after the bookbinder left the energy save mode, the glue thermistor did not detect the target temperature (153°C±5). -or- After the glue thermistor detected a glue temperature of 50°C, it did not detect a temperature above 140°C within 200 sec.	
		• Heater (HTR1) defective • Glue thermistor (S56) defective	

SC797-20	B	Electrical Short in the Gluing Unit	PB (D391)
		A short circuit or wire breakage occurred in the gluing unit. The glue thermistor (S56) detected: • A temperature over 200°C more than 1 sec. (short circuit) • A temperature of less than 5°C for more than 1 sec. or more than 10 sec. after power on (wire breakage) • The AD value of the glue level thermistor (S58) remained at 1023 for 10 sec (wire breakage).	
		• Heater (HTR1) defective • Glue thermistor (S56) defective	

SC797-21	B	Temperature Detection Error	PB (D391)
		After adjustment of the glue temperature, the glue temperature thermistor (S56) detected a temperature lower than 135C for more than 10 sec.	
		• Heater (HTR1) defective • Glue thermistor (S56) defective	
		The glue level thermistor detected a temperature higher than 170°C for longer than 10 sec. after the glue had warmed up. -or- The glue level thermistor detected a temperature higher than 100°C for longer than 10 sec. after the glue had warmed up.	
		• Glue level thermistor (S58) defective	

SC797-22	B	Protection Circuit Error	PB (D391)
		The thermostat (THSW1) inside the gluing unit detected an abnormally high temperature.	
		• Glue heater (HTR1)defective • Thermostat (THSW1) defective	

SC797-23	B	Glue Surface Error 1	PB (D391)
		The surface of the glue in the vat did not reach the lower limit position. This error occurred when the glue surface was detected below the lower limit position 4 times in succession during the glue replenishment cycle.	
		• Glue has clogged in the vat • Glue supply defective • Glue level thermistor (S58) defective	
		The glue level thermistor could not detect the glue surface at the upper limit position: 1) After glue was detected above the low limit mark, and 2) After 12 glue packets were supplied, and 3) No glue had been recently applied.	
		• Glue has clogged in the vat • Glue level thermistor (S58) defective	

SC797-24	B	Glue Surface Error 2	PB (D391)
		Without a glue vat refill, the glue level thermistor could not detect the level of the glue below the upper limit (full) level, even after the application of 25.42 g of glue.	
		• Glue application abnormal (not applying correctly) • Glue level thermistor (S58) defective	

SC797-25	B	Glue Level Thermistor (S58) Adjustment Error	PB (D391)
		One of the following errors occurred in the adjustment data for the glue level thermistor: 1. Glue level thermistor 1 value (low limit) was out of the range: 128°C±14C 2. Glue level thermistor 2 value (high limit) was out of the range: 142°C±10C 3. Glue level thermistor adjustment value 1 was larger than for adjustment 1.	
		• Replace the EEPROM on the slave control board	

SC797-26	B	Timing Sensor (S5) Adjustment Error	PB (D391)
		The value for the adjustment of the timing sensor was out of range (3.0V to 3.5V)	
		• Timing sensor (S5) defective • D/A converter defective • A/D converter defective	

SC797-27	B	Cover Registration Sensor (S21) Error	PB (D391)
		The value for the adjustment of the cover registration sensor was out of range (3.0V to 3.5V)	
		• Cover registration (S21) sensor defective • D/A converter defective • A/D converter defective	

SC797-28	B	Cover Horizontal Registration Sensor: Small (S71)	PB (D391)
		The value for the adjustment of the cover horizontal registration sensor: small was out of range (3.0V to 3.5V)	
		• Cover horizontal registration sensor: small (S71) defective • D/A converter defective • A/D converter defective	

SC797-29	B	Cover Horizontal Registration Sensor: Large (S72)	PB (D391)
		The value for the adjustment of the cover horizontal registration sensor: large was out of range (3.0V to 3.5V)	
		• Cover horizontal registration sensor: large (S72) defective • D/A converter defective • A/D converter defective	

SC797-30	B	Book Exit Sensor (S64) Error	PB (D391)
		The value for the adjustment of the book exit sensor (S64) was out of range (3.2V to 3.54V)	
		• Signature Exit Sensor (S64) defective • D/A converter defective • A/D converter defective	

SC797-31	B	Leading Edge Sensor (S65) Error	PB (D391)
		The value for the adjustment of the LE sensor (S65) was out of range (3.2V to 3.54V)	
		• Leading edge sensor (S65) defective • D/A converter defective • A/D converter defective	

SC797-32	B	Trim Unit Entrance Sensor (S92) Error	PB (D391)
		The adjusted value for the trim unit entrance sensor was higher or lower than the target range.	
		• Book grip motor (M43) defective • Trim unit entrance sensor (S92) defective • Motor or sensor harness loose, broken, defective	

SC797-33	B	Book Registration Sensor (S88) Error	PB (D391)
		The adjusted value for the book registration was higher or lower than the target range.	
		• Book grip motor (M43) defective • Book registration sensor (S88) defective • Motor or sensor harness loose, broken, defective	

SC797-34	B	Leading Edge Sensor (S65) Error	PB (D391)
		A book was not detected in the path for trimming when the slave control board received the signal for transport end. The book has fallen past the sensor.	
		• Main grip motors: front/rear (M24/M23) defective. • Leading edge sensor (S65) defective • Motor or sensor connector loose, broken, defective	

SC797-35	B	Book Exit Sensor (S64) Error	PB (D391)
		The book exit sensor (S64) did not turn ON, even after the book transport end signal was received when the book was passed from the gluing unit to the trimming unit. No book was detected at the entrance of the trimming unit.	
		• Failure to deliver the signature (due to a jam) • Signature path exit motor (M30) defective • Book exit sensor (S64) defective • Motor or sensor harness loose, broken, defective	

SC797-36	B	Book Exit Sensor (S64) Late Error	PB (D391)
		A book was not detected in the trimming unit because the book registration sensor failed to go ON.	
		• Main grip lift motor (M22) defective • Book exit sensor (S64) defective • Motor or sensor harness loose, broken, defective	

SC797-37	B	Book Exit Sensor (S64) Lag Error	PB (D391)
		The book exit sensor detected a book at power on. The cover path was closed and there was no book at the LE sensor (S65)	
		• Book exit sensor (S64) defective • Sensor harness loose, broken, defective	

SC797-38	B	Book Exit Sensor (S64) Error	PB (D391)
		The book exit sensor did not detect the signature within the prescribed time after the glued signature exited the gluing unit.	
		• Book exit sensor (S64) connector loose, broken, defective • Sensor defective	

SC797-39	B	Main Grip Signature Sensor (S55) Error	PB (D391)
		No signature was detected in the main grip unit after the signature passed from the sub grip to the main grip.	
		• Main grip signature sensor (S55) defective • Sensor connector loose, broken, defective	

SC797-40	B	Cutter Entrance Sensor Error	PB (D391)
		The cutter entrance sensor (S65) went ON at power on after the finisher initialized. -or- The signature exit senor remained ON after the power on jam recovery.	
		• Detected a signature jam at power on.	

SC797-41	B	Signature Registration Sensor Lag Error	PB (D391)
		The signature registration sensor went ON at warm-up after power on. -or- When the signature exited and the lift tray lowered, the sensor went ON.	
		• Detected a jammed book at power on. • Motor or sensor harness loose, broken, defective	

SC797-42	B	Book Arrival Sensor (S76)	PB (D391)
		After the book output operation ended, the book arrival sensor remained ON because the book failed to move from the buffer tray to the output tray.	
		• Trimmings buffer motor (M37) defective • Book arrival sensor (S76) defective • Motor or sensor harness loose, broken, defective	

SC797-43	B	Trimming Jam Scrap Error	PB (D391)
		The strips cut from the book could not be dumped into the trimmings box or the strips jammed between the trimmings buffer and edge press plate and trimming stopped. Three attempts failed to restore operation, then the jam alert was issued.	
		• Strips jammed between the edge press plate and trimmings buffer. • Trimmings buffer motor (M37) defective • Trimmings buffer HP sensors: right or left (S100, S103) defective • Motor or sensor harness loose, broken, defective	
		Note: Trimming strips wider that 29 mm at the bottom and top edges (1st and 2nd cuts) and wider than 41 mm at the fore edge (3rd cut) will cause the trimming unit to jam.	

SC797-44	B	Sub Grip Signature Sensor (S39) Lag Error	PB (D391)
		The sub grip signature sensor did not go OFF after the sub grippers released the signature to the main grip because the signature did not move.	
		• Signature jammed in sub grip unit • Sub grip signature sensor defective • Sensor connector loose, broken, defective	

SC797-45	B	Main Grip Signature Sensor (S55) Lag Jam	PB (D391)
		The main grip signature sensor did not go OFF after the main grippers released the signature to the trimming unit because the book did not move.	
		• Book jammed in main grip unit • Main grip signature sensor (S55) defective • Sensor connector loose, broken, defective	

SC797-46	B	Signature Thickness Sensor (S50) Error	PB (D391)
		The size of the signature measured by the signature thickness sensor was smaller than the minimum.	
		• Signature thickness sensor (S50) defective • Sensor connector loose, broken, defective	

SC797-47	B	Glue Vat Roller Rotation Error	PB (D391)
		The glue vat roller sensor did not detect any rotation at the glue vat roller within the prescribed time after the glue vat roller motor turned on.	
		• Glue vat roller motor (M25) defective • Glue vat roller rotation sensor (S59) defective • Motor or sensor connector loose, broken, defective	

SC797-48	B	Glue Supply Motor (M33) Error	PB (D391)
		The glue supply HP sensor (S75) did not turn ON within the prescribed time after the glue supply motor (S33) turned on. The motor did not arrive at its home position.	
		• Glue pellet jam in the glue feeder • Glue supply motor (M33) defective • Glue supply HP sensor (S75) defective • Motor or sensor connector loose, broken, defective	

SC797-49	B	Front Door Lock Error	PB (D391)
		The right front door sensor did not go OFF even though the front doors were closed and locked. -or- The right front door sensor did not go ON even though the front doors released and opened. -or- Front doors are detected open even though the front doors are closed and locked.	
		• Right front door solenoid (SOL3) defective • Right front door sensor (S30) defective • Sensor connector loose, broken, defective • One or more of the front door micro-switches (MSW1, 2, 4, 5, 6, 7) defective	

SC797-50	B	Switchback Flapper HP Sensor (S10) Error	PB (D391)
		The switchback flapper HP sensor did not go ON within the prescribed time after the motor turned on long enough to raise the flapper through an arc of 50 degrees. -or- The switchback flapper HP sensor did not go OFF within the prescribed time after the motor turned on long enough to lower the flapper through an arc of 150 degrees.	
		• Switchback Flapper HP Sensor (S10) defective • Switchback flapper motor (M8) defective • Motor or sensor connector loose, broken, defective	

SC797-51	B	TE Press Lever HP Sensor (S3) Error	PB (D391)
		The TE press lever HP sensor did not go ON when the TE press lever motor turned on to move the lever through an arc of 30 degrees to release the lever. -or- The TE press lever HP sensor did not go OFF when the TE press lever motor turned on to move the lever through an arc of 20 degrees to close the lever.	
		• TE press lever HP sensor (S3) defective • TE press lever motor (M3) defective • Sensor or motor connector loose, broken, defective	

SC797-52	B	Jog Fence HP Sensor: Front/Small (S12) Error	PB (D391)
		The front jog fence HP sensor for small size paper did not go ON within the prescribed time when the front jogger motor turned on to move the fence. -or- The front jog fence HP sensor for small size paper did not go OFF within the prescribed time when the front jogger motor turned on to move the fence.	
		• Jog fence HP sensor: front/small (S12) defective • Jogger motor: front (M4) defective • Sensor or motor connector loose, broken, defective	

SC798-1	B	Jog Fence HP Sensor: Front/Large (S14) Error	PB (D391)
		The front jog fence HP sensor for large size paper did not go ON within the prescribed time when the front jogger motor turned on to move the fence. -or- The front jog fence HP sensor for large size paper did not go OFF within the prescribed time when the front jogger motor turned on to move the fence.	
		• Jog fence HP sensor: front/large (S14) defective • Jogger motor: front (M4) defective • Sensor or motor connector loose, broken, defective	

SC798-2	B	Jog Fence HP Sensor: Rear/Small (S13) Error	PB (D391)
		The rear jog fence HP sensor for small size paper did not go ON within the prescribed time when the rear jogger motor turned on to move the fence. -or- The rear jog fence HP sensor for small size paper did not go OFF within the prescribed time when the rear jogger motor turned on to move the fence.	
		• Jog fence HP sensor: rear/small (S13) defective • Jogger motor: rear (M5) defective • Sensor or motor connector loose, broken, defective	

SC798-3	B	Jog Fence HP Sensor: Rear/Large (S15) Error	PB (D391)
		The rear jog fence HP sensor for large size paper did not go ON within the prescribed time when the rear jogger motor turned on to move the fence. -or- The rear jog fence HP sensor for large size paper did not go OFF within the prescribed time when the rear jogger motor turned on to move the fence.	
		• Jog fence HP sensor: rear/large (S15) defective • Jogger motor: rear (M5) defective • Sensor or motor connector loose, broken, defective	

SC798-4	B	Switchback Roller HP Sensor (S11) Error	PB (D391)
		The switchback roller HP sensor did not go ON within the prescribed time after the motor turned on to raise the roller through an arc of 40 degrees. -or- The switchback roller HP sensor did not go OFF within the prescribed time when the motor turned on to lower the roller through an arc of 20 degrees.	
		• Switchback Roller HP Sensor (S11) defective • Switchback Roller Motor (M7) defective • Sensor or motor connector loose, broken, defective	

SC798-5	B	Stacking Tray Lower Limit Sensor (S7) Error	PB (D391)
		The stacking tray lower limit sensor did not go ON within the prescribed time when the stacking tray lift motor turned on to lower the tray. -or- The stacking tray lower limit sensor did not go OFF within the prescribed time when the stacking tray lift motor turned on to raise the tray 30 mm.	
		• Stacking Tray Lower Limit Sensor (S7) defective • Stacking Tray Lift Motor (M2) defective • Sensor or motor connector loose, broken, defective	

SC798-6	B	Paper Detection Sensor: Front/Rear (S1/S2)	PB (D391)
		The paper detection sensor at the front of the stacking tray did not go ON within the prescribed time after the stacking tray overflow sensor (S6) went ON and the stacking tray lift motor turned on to raise the tray. -or- The paper detection sensor at the front of the stacking tray did not go OFF within the prescribed time when the stacking tray lift motor turned on to lower the tray. -or- The paper detection sensor at the rear of the stacking tray did not go ON within the prescribed time after the stacking tray overflow sensor (S6) went ON and the stacking tray lift motor turned on to raise the tray. -or- The paper detection sensor at the rear of the stacking tray did not go OFF within the prescribed time when the stacking tray lift motor turned on to lower the tray.	
		• Paper Detect Sensor: Front (S1) defective • Stacking Tray Lift Motor (M2) defective	

SC798-7	B	Stacking Tray Overflow Sensor (S6) Error	PB (D391)
		The stacking tray overflow sensor did not go ON within the prescribed time when the stacking tray lift motor turned on to raise the tray 70 mm. -or- The stacking tray overflow sensor did not go OFF within the prescribed time after the stacking tray lift motor turned on to lower the tray so paper could be removed from the tray by the operator.	
		• Stacking Tray Overflow Sensor (S6) defective • Stacking Tray Lift Motor (M2) defective • Sensor or motor connector loose, broken, defective	

SC798-8	B	Stacking Tray HP Sensor (S9) Error	PB (D391)
		The stacking tray HP sensor did not go ON within the prescribed time when the stacking tray motor turned on to move the tray toward the sensor. -or- The stacking tray HP sensor did not go OFF when the stacking tray motor turned on to move the tray away from the sensor.	
		• Stacking HP Sensor (S9) defective • Stacking Tray Motor (M9) defective • Sensor or motor connector loose, broken, defective	

SC798-9	B	Stacking Weight HP Sensor (S16) Error	PB (D391)
		The stacking weight HP sensor did not go ON within the prescribed time when the stacking weight motor turned on to move the tray toward the sensor. -or- The stacking weight HP sensor did not go OFF within the prescribed time when the stacking tray motor turned on to move the tray away from the sensor.	
		• Stacking Weight HP Sensor (S16) defective • Stacking Weight Motor (M6) defective • Sensor or motor connector loose, broken, defective	

SC798-10	B	Sub Grip HP Sensor (S37) Error	PB (D391)
		The sub grip HP sensor did not go ON within the prescribed time after the sub grip lift motor turned on to raise the sub grip unit. -or- The sub grip HP sensor did not go OFF within the prescribed time after the sub grip lift motor turned on to lower the sub grip unit.	
		• Sub Grip Lift Motor (M17) defective • Sub Grip HP Sensor (S37) defective • Sensor or motor connector loose, broken, defective	

SC798-11	B	Sub Grip Size HP Sensor (S38)	PB (D391)
		The sub grip size HP sensor did not go ON within the prescribed time after the sub grip size motor turned on for horizontal adjustment to the paper size, or the sub grip size HP sensor was already OFF when the sub grip size horizontal adjustment started. -or- The sub grip size HP sensor did not go OFF within the prescribed time after the sub grip size motor turned on to close for horizontal adjustment to the paper size, or the sub grip size HP sensor was already ON when the sub grip size horizontal adjustment started.	
		• Sub Grip Size Motor (S19) defective • Sub Grip Size HP Sensor (S38) defective • Sensor or motor connector loose, broken, defective	

SC798-12	B	Sub Grip Open Sensor (S40) Error	PB (D391)
		The sub grip open sensor did not go ON within the prescribed time after the sub grip lift motor turned on to open the sub grip unit. -or- The sub grip open sensor did not go OFF within the prescribed time after the sub grip lift motor turned on to close the sub grip unit.	
		• Sub Grip Open Motor (S20) defective • Sub Grip Open Sensor (S40) defective • Sensor or motor connector loose, broken, defective	

SC798-13	B	Sub Grip Close Sensor (S41) Error	PB (D391)
		The sub grip close sensor did not go ON within the prescribed time after the sub grip lift motor turned on to close the sub grip unit. -or- The sub grip close sensor did not go OFF within the prescribed time after the sub grip open motor turned on to open the sub grip unit.	
		• Sub Grip Open Motor (S20) defective • Sub Grip Close Sensor (S41) defective • Sensor or motor connector loose, broken, defective	

SC798-14	B	Main Grip HP Sensor (S44) Error	PB (D391)
		The main grip HP sensor did not go ON within the prescribed time after the main grip lift motor turned on to raise the main grip unit, or the main grip HP sensor was already ON when the motor started to lower the main grip unit. -or- The main grip HP sensor did not go OFF within the prescribed time after the main grip lift motor turned on to lower the main grip unit, or the main grip HP sensor was already ON when the motor started to lower the main grip unit.	
		• Main Grip Lift Motor (M22) defective • Main Grip HP Sensor (S44) Error • Sensor or motor connector loose, broken, defective	

SC798-15	B	Main Grip Press Sensor 1 (S48) Error	PB (D391)
		The main grip press sensor 1 did not go ON within the prescribed time after the main grip lift motor turned on to raise the main grip unit from the main grip signature registration position. -or- The main grip press sensor 1 did not go OFF within the prescribed time after the main grip lift motor turned on to lower the main grip unit to the main grip signature registration position.	
		• Main Grip Lift Motor (M22) defective • Main Grip Press Sensor 1 (S48) defective • Sensor or motor connector loose, broken, defective	

SC798-16	B	Main Grip Press Sensor 2 (S49) Error	PB (D391)
		The main grip press sensor 2 did not go ON within the prescribed time after the main grip lift motor turned on to lower the main grip unit and signature to the point where the signature was to be pressed into the center of the cover. -or- The main grip press sensor 2 did not go OFF within the prescribed time after the main grip lift motor turned on to raise the main grip unit away from the point where the signature was pressed into the center of the cover.	
		• Main Grip Lift Motor (M22) defective • Main Grip Press Sensor 2 (S49) defective • Sensor or motor connector loose, broken, defective	

SC798-17	B	Main Grip Signature Exit Error	PB (D391)
		The book exit sensor did not go ON within the prescribed time after the main grip lift motor moved the signature to the delivery point when the signature was passed from the main grip unit to the book exit roller.	
		• Signature broken, bent • Signature jammed in the main grip unit • Main Grip Lift Motor (M22) defective • Book Exit Sensor (S64) defective • Sensor or motor connector loose, broken, defective	

SC798-18	B	Main Grip HP Sensor: High (S45) Error	PB (D391)
		The main grip high HP sensor did not go ON within the prescribed time after the main grip lift motor turned on to raise the main grip unit. -or- The main grip high HP sensor did not go OFF within the prescribed time after the main grip lift motor turned on to lower the main grip unit.	
		• Main Grip Lift Motor (M22) defective • Main Grip HP Sensor: High (S45) defective • Sensor or motor connector loose, broken, defective	

SC798-19	B	Main Grip Open Sensor: Rear/Front (S47, S48)	PB (D391)
		The rear main grip open sensor did not go ON within the prescribed time after the rear grip motor turned on to open the main grip unit. -or- The rear main grip open sensor did not go OFF within the prescribed time after the rear grip motor turned on to close the main grip unit.	
		• Grip Motor: Rear (M23) defective • Main Grip Open Sensor: Rear (S47) defective	
		The rear main grip close sensor did not go ON within the prescribed time after the rear grip motor turned on to close the main grip unit. -or- The rear main grip close sensor did not go OFF within the prescribed time after the rear grip motor turned on to open the main grip unit.	
		• Grip Motor: Rear (M23) defective • Main Grip Close Sensor: Rear (S54) defective • Sensor or motor connector loose, broken, defective	

SC798-20	B	Main Grip Encoder: Rear Sensor (S46) Error	PB (D391)
		The rear main grip encoder sensor could not be detected ON/OFF within the prescribed time after the rear grip motor turned on to open and close the main grip unit.	
		• Main Grip Encoder: Rear Sensor (S46) defective • Grip Motor: Rear (M23) defective • Main Grip Encoder: Rear Sensor (S46) defective • Sensor or motor connector loose, broken, defective	

SC798-21	B	Main Grip Open/Close Sensor: Front (S51,S53)	PB (D391)
		The front main grip open sensor did not go ON within the prescribed time after the front grip motor turned on to open the main grip unit. -or- The front main grip open sensor did not go OFF within the prescribed time after the front grip motor turned on to close the main grip unit.	
		• Grip Motor: Front (M24) defective • Main Grip Open Sensor: Front (S51) defective • Sensor or motor connector loose, broken, defective	
		The front main grip close sensor did not go ON within the prescribed time after the front grip motor turned on to close the main grip unit. -or- The front main grip close sensor did not go OFF within the prescribed time after the front grip motor turned on to open the main grip unit.	
		• Grip Motor: Front (M24) defective • Main Grip Close Sensor: Front (S53) defective • Sensor or motor connector loose, broken, defective	

SC798-22	B	Main Grip Encoder: Front Sensor (S52) Error	PB (D391)
		The front main grip encoder sensor could not be detected ON/OFF within the prescribed time after the front grip motor turned on to open/close the main grip unit.	
		• Main Grip Encoder: Front Sensor (S52) defective • Grip Motor: Front (M24) defective • Main Grip Encoder: Front Sensor (S52) defective • Sensor or motor connector loose, broken, defective	

SC798-23	B	Signature Exit Path HP Sensor (S67) Error	PB (D391)
		The signature exit path HP sensor did not go ON within the prescribed time after the signature exit path motor turned on to retract the signature exit roller. -or- The signature exit path HP sensor did not go OFF within the prescribed time after the signature exit path motor turned on to move the signature exit roller.	
		• Signature Exit Path Motor (M30) defective • Signature Exit Path HP Sensor (S67) defective • Sensor or motor connector loose, broken, defective	

SC798-24	B	Signature Exit Path Press Sensor (S68) Error	PB (D391)
		The signature exit path press sensor did not go ON within the prescribed time after the signature exit path motor turned on to feed the book into the nip of the signature exit roller. -or- The signature exit path press sensor did not go OFF within the prescribed time after the signature exit path motor turned on to retract the signature exit roller.	
		• Signature Exit Path Motor (M30) defective • Signature Exit Path Press Sensor (S68) defective • Sensor or motor connector loose, broken, defective	

SC798-25	B	Inserter Drive Switch Sensor (S16)	PB (D391)
		The drive switch sensor in the inserter unit did not go OFF within the time prescribed for the drive switching motor (M2) to switch drives. -or- The drive switch sensor in the inserter unit did not go ON within the prescribed time.	
		• Drive switch motor (M2) defective • Drive switch sensor (S16) defective • Sensor or motor connector loose, broken, defective	

SC798-26	B	Inserter Tray A Error	PB (D391)
		Inserter Tray A (upper tray) failed to leave its lower limit sensor (S11) within the prescribed time after the Tray A lift motor turned on. -or- Inserter Tray A (upper tray) failed to arrive at its paper feed sensor (S4) within the prescribed time after the Tray A lift motor turned on.	
		• Lift Motor: Tray A (M3) defective • Lower limit sensor: Tray A (S11) defective • Paper feed sensor (S4) defective • Sensor or motor connector loose, broken, defective	

SC798-27	B	Inserter Tray B Error	PB (D391)
		Inserter Tray B (lower tray) failed to leave its lower limit sensor (S12) within the prescribed time after the Tray B lift motor turned on. -or- Inserter Tray B (lower tray) failed to arrive at its paper feed sensor (S10) within the prescribed time after the Tray B lift motor turned on.	
		• Lift Motor: Tray B (M4) defective • Lower Limit Sensor: Tray B (S12) defective • Sensor or motor connector loose, broken, defective	

SC799-1	D	Trimming Blade Motor Error	Trimmer (D455)
		The trimming blade HP sensor did not detect the blade at (or out of) its home position within the prescribed time during trimming. The 1st detection causes a jam signal if the error occurred during cutting. The 2nd detection causes this SC code if the error occurred at the start or end of cutting.	
		• Check for and remove any obstacles (jammed paper scraps) around the blade, motor, or sensor • Trimming blade HP sensor dirty • Sensor harness or connector loose, broken, defective • Trimming blade motor harness or connector loose, broken, defective • Motor defective • Trimming unit main board defective	

SC799-2	D	Press Roller Motor Error	Trimmer (D455)
		The press roller HP sensor did not detect the press roller at (or out of) its home position within the prescribed time. The 1st occurrence causes a jam, and the 2nd occurrence causes this SC code.	
		• Check for and remove any obstacles around the motor and sensor • Press roller motor HP sensor dirty • Sensor harness or connector loose, broken, defective • Press roller motor harness or connector loose, broken, defective • Motor defective • Trimming unit main board defective	

SC799-3	D	Cut Position Motor Error	Trimmer (D455)
		The cut position HP sensor did not detect the cut position stopper at (or out of) its home position within the prescribed time. The 1st occurrence causes a jam, and the 2nd occurrence causes this SC code.	
		• Check for and remove any obstacles around the motor and sensor • Cut position HP sensor dirty • Sensor harness or connector loose, broken, defective • Cut position motor harness or connector loose, broken, defective • Motor defective • Trimming unit main board defective	

SC799-4	D	Press Stopper Motor Error	Trimmer (D455)
		The press stopper HP sensor did not detect the press stopper at (or out of) its home position within the prescribed time. The 1st occurrence causes a jam, and the 2nd occurrence causes this SC code.	
		• Check for and remove any obstacles around the motor and sensor • Press stopper HP sensor dirty • Sensor harness or connector loose, broken, defective • Press stopper motor harness or connector loose, broken, defective • Motor defective • Trimming unit main board defective	

Service Call Tables - 8

SC800: Overall System

No.	Type	Details (Symptom, Possible Cause, Troubleshooting Procedures)
816	CTL D	Energy saving I/O sub-system error
		The energy saving I/O sub-system detects an error.
		• Controller board defective
		Replace the controller board.

No.	Type	Details (Symptom, Possible Cause, Troubleshooting Procedures)
817	CTL D	Boot loader error
		The boot loader cannot read one of the following: self-diagnostic module, kernel, or one of the files of the root file system, or the check of one of these items on the system SD card failed.
		• File or module on the system SD card is corrupted • File or module on the system SD card is illegal • Make sure that the system SD card is the one designed for the machine • Replace controller board.

No.	Type	Details (Symptom, Possible Cause, Troubleshooting Procedures)		
819	CTL D	Fatal kernel error		
		Due to a control error, a RAM overflow occurred during system processing. One of the following messages was displayed on the operation panel.		
		0x5032	HAIC-P2 error	• System program defective • Controller board defective • Optional board defective • Replace controller firmw
		0x766d	vm_pageout: VM is full	
		4361	Cache Error	
		Other		

Note

- For more details about this SC code error, execute SP5990 to print an SMC report so you can read the error code list. The error code is not displayed on the operation panel.

No.	Type	Details (Symptom, Possible Cause, Troubleshooting Procedures)
821	CTL D	Self-diagnostics error: ASIC [XXXX]: Detailed error code
[0B06]		ASIC detection error
		The I/O ASIC for system control is not detected.
		• Defective ASIC • Defective North Bridge and PCI I/F
		Replace the controller board.

No.	Type	Details (Symptom, Possible Cause, Troubleshooting Procedures)
822	CTL B	Self-diagnostic error: HDD (Hard Disk Drive) [XXXX]: Detailed error code
[3003]		Timeout error
[3004]		Command error
		When the main switch is turned on or starting the self-diagnostic, the HDD stays busy for the specified time or more.
		• Loose connection • Defective HDD • Defective controller
		1. Check that the HDD is correctly connected to the controller. 2. Replace the HDD. 3. Replace the controller.

No.	Type	Details (Symptom, Possible Cause, Troubleshooting Procedures)
823		Self-diagnostic error:NIB
[6101]		MAC address check sum error

No.	Type	Details (Symptom, Possible Cause, Troubleshooting Procedures)
		The result of the MAC address check sum does not match the check sum stored in ROM.
[6104]		PHY IC error
		The PHY IC on the controller cannot be correctly recognized.
[6105]		PHY IC loop-back error
		An error occurred during the loop-back test for the PHY IC on the controller.
		Replace the controller.

No.	Type	Details (Symptom, Possible Cause, Troubleshooting Procedures)
824	CTL D	[1401] Self-diagnosis error: Standard NVRAM The controller cannot recognize the standard NVRAM installed or detects that the NVRAM is defective.
		• Loose connection • Defective standard NVRAM • Defective controller
		1. Check the standard NVRAM is firmly inserted into the socket. 2. Replace the NVRAM. 3. Replace the controller

No.	Type	Details (Symptom, Possible Cause, Troubleshooting Procedures)
829	CTL B	Self-diagnostic error 5: Optional RAM
		Verify error for optional RAM.
		• Make sure that the resident RAM is installed in the correct slot. • Make sure the optional RAM is installed in the correct slot (Slot 0)
		1. Install the optional RAM on the controller board. 2. Replace the controller board.

No.	Type	Details (Symptom, Possible Cause, Troubleshooting Procedures)
833	CTL C	Self-diagnostic error 8: Engine I/F ASIC
[0F30] [0F31]		ASIC (Mandolin) for system control could not be detected. After the PCI configuration, the device ID for the ASIC could not be checked.
		• Replace the VBCU
[0F41]		ASIC (Mandolin) for system control could not be detected. After the PCI configuration, the device ID for the ASIC could not be checked.
		• Replace the VBCU
[0F21]		The machine detects an error from the resident RAM on the controller board at write/verify check.
		Replace the controller board.

No.	Type	Details (Symptom, Possible Cause, Troubleshooting Procedures)
834 [5101]	CTL C	Self-diagnostic error 9: Optional Memory RAM DIMM
		The write/verify check for the optional RAM chip on the controller board returned an error.
		• Controller defective
		Replace the controller board.

No.	Type	Details (Symptom, Possible Cause, Troubleshooting Procedures)
851	CTL B	IEEE1394 interface error
		The 1394 interface is unusable.
		• Defective IEEE1394 • Defective controller.
		1. Turn the main switch off and on. 2. Replace the IEEE1394 interface board. 3. Replace the controller.

No.	Type	Details (Symptom, Possible Cause, Troubleshooting Procedures)
853	CTL B	Wireless LAN card not detected
		The wireless LAN card is not detected before communication is established, though the wireless LAN board is detected.
		• Loose connection
		Check the connection.

No.	Type	Details (Symptom, Possible Cause, Troubleshooting Procedures)
854	CTL B	Wireless LAN/Bluetooth card not detected
		The wireless LAN/Bluetooth card is not detected after communication is established, but the wireless LAN board is detected.
		• Loose connection
		Check the connection.

No.	Type	Details (Symptom, Possible Cause, Troubleshooting Procedures)
855 856	CTL B	Wireless LAN/Bluetooth card error
		An error is detected in the wireless LAN/Bluetooth card.
		• Loose connection • Defective wireless LAN/Bluetooth card
		1. Check the connection. 2. Replace the wireless LAN/Bluetooth card.

No.	Type	Details (Symptom, Possible Cause, Troubleshooting Procedures)
857	CTL B	USB interface error
		The USB interface cannot be used due to a driver error.
		• Defective USB driver • Loose connection
		1. Check the connection. 2. Replace the USB board.

No.	Type	Details (Symptom, Possible Cause, Troubleshooting Procedures)	
858	CTL A	Data Encryption Error 1	
		These are errors of the HDD Data Encryption Option D377.	
0		Key Acquistion	Key could be acquired. • Replace the controller board
1		HDD Key Setting Error	The key was acquired but the HDD could not be set. • Turn the machine power off/on several times. • Replace the controller board.
2		NVRAM Read Error	NVRAM data conversion failed (mismatch with nvram.conf) • Replace the NVRAM
30		NVRAM Before Replace Error	DFU. May occur during development. • Turn the machine power off/on several times. • Replace the controller board.

No.	Type	Details (Symptom, Possible Cause, Troubleshooting Procedures)	
859	CTL B	Data Encryption Error 2	
		These are errors of the HDD Data Encryption Option D377.	
8		HDD Check Error	Data conversion was attempted with no HDD unit present. • Confirm that HDD unit installed correctly • Initialize HDD with SP5832-1 **Note:** After installation, a new HDD should be formatted with SP5832-1
9		Power Loss During Data Conversion	Data conversion stopped before NVRAM/HDD data was converted. • Format HDD with SP5832-1

No.	Type	Details (Symptom, Possible Cause, Troubleshooting Procedures)	
10		Data Read Command Error	More than two illegal DMAC communications were returned. • HDD defective • Format HDD with SP5832-1 • Replace HDD

No.	Type	Details (Symptom, Possible Cause, Troubleshooting Procedures)
860	CTL B	HDD: Initialization error
		The controller detects that the hard disk fails.
		• HDD not initialized • Defective HDD
		1. Reformat the HDD. 2. Replace the HDD.

No.	Type	Details (Symptom, Possible Cause, Troubleshooting Procedures)
861	CTL D	HDD: Reboot error
		The HDD does not become ready within 30 seconds after the power is supplied to the HDD.
		• Loose connection • Defective cables • Defective HDD • Defective controller
		1. Check the connection between the HDD and controller. 2. Check and replace the cables. 3. Replace the HDD. 4. Replace the controller.

No.	Type	Details (Symptom, Possible Cause, Troubleshooting Procedures)
863	CTL D	HDD: Read error
		The data stored in the HDD cannot be read correctly.
		• Defective HDD • Defective controller
		1. Replace the HDD. 2. Replace the controller.

No.	Type	Details (Symptom, Possible Cause, Troubleshooting Procedures)
864	CTL D	HDD: CRC error
		While reading data from the HDD or storing data in the HDD, data transmission fails.
		• Defective HDD
		Replace the HDD.

No.	Type	Details (Symptom, Possible Cause, Troubleshooting Procedures)
865	CTL D	HDD: Access error
		An error is detected while operating the HDD.
		• Defective HDD
		Replace the HDD.

No.	Type	Details (Symptom, Possible Cause, Troubleshooting Procedures)
866	CTL B	SD card authentication error
		A correct license is not found in the SD card.
		• SD-card data is corrupted.
		Store correct data in the SD card.

No.	Type	Details (Symptom, Possible Cause, Troubleshooting Procedures)
867	CTL D	SD card error
		The SD card is ejected from the slot.
		1. Install the SD card. 2. Turn the main switch off and on.

No.	Type	Details (Symptom, Possible Cause, Troubleshooting Procedures)
868	CTL D	SD card access error • -13 to -3: File system error • Other number: Device error
		An error report is sent from the SD card reader. • An error is detected in the SD card.
		1. For a file system error, format the SD card on your PC. 2. For a device error, turn the mains switch off and on. 3. Replace the SD card. 4. Replace the controller.

No.	Type	Details (Symptom, Possible Cause, Troubleshooting Procedures)
870	CTL B	Address book error
		An error is detected in the data copied to the address book over a network.
		• Defective software program • Defective HDD • Incorrect path to the server
		1. Initialize the address book data (SP5-846-050). 2. Initialize the user information (SP5-832-006). 3. Replace the HDD.

No.	Type	Details (Symptom, Possible Cause, Troubleshooting Procedures)
872	CTL B	HDD mail data error
		An error is detected in the HDD at machine initialization.
		• Defective HDD • Power failure during an access to the HDD
		1. Turn the main switch off and on. 2. Initialize the HDD partition (SP5-832-007). 3. Replace the HDD.

No.	Type	Details (Symptom, Possible Cause, Troubleshooting Procedures)
873	CTL B	HDD mail transfer error
		An error is detected in the HDD at machine initialization.
		• Defective HDD • Power failure during an access to the HDD
		1. Initialize the HDD partition (SP5-832-008). 2. Replace the HDD.

No.	Type	Details (Symptom, Possible Cause, Troubleshooting Procedures)
874	CTL D	Delete All error 1: HDD
		An error is detected while all of the HDD or NVRAM are formatted physically by the Data Overwrite Security Unit (B735).
		• Data Overwrite Security Unit (SD card) not installed • Defective HDD
		1. Install the Data Overwrite Security Unit (B735). 2. Replace the HDD.

No.	Type	Details (Symptom, Possible Cause, Troubleshooting Procedures)
875	CTL D	Delete All error 2: Data area
		An error is detected while all of the HDD or NVRAM are formatted logically by the Data Overwrite Security Unit (B735).
		• The logical format for the HDD fails.
		Turn the main switch off/on and try the operation again

No.	Type	Details (Symptom, Possible Cause, Troubleshooting Procedures)
876	CTL D	Log Data Error An error was detected in the handling of the log data at power on or during machine operation. This can be caused by switching the machine off while it is operating.
-001		Log Data Error 1
		• Damaged log data file in the HDD
		Initialize the HDD with SP5832-004.
-002		Log Data Error 2
		• An encryption module not installed
		1. Disable the log encryption setting with SP9730-004 ("0" is off.) 2. Install the DESS module.
-003		Log Data Error 3
		• Invalid log encryption key due to defective NVRAM data
		1. Initialize the HDD with SP5832-004. 2. Disable the log encryption setting with SP9730-004 ("0" is off.)
-004		Log Data Error 4
		• Unusual log encryption function due to defective NVRAM data
		Initialize the HDD with SP5832-004.

No.	Type	Details (Symptom, Possible Cause, Troubleshooting Procedures)
-005		Log Data Error 5
		• Installed NVRAM or HDD which is used in another machine
		1. Reinstall the previous NVRAM or HDD. 2. Initialize the HDD with SP5832-004.
-099		Log Data Error 99
		• Other than the above causes
		Ask your supervisor.

No.	Type	Details (Symptom, Possible Cause, Troubleshooting Procedures)
877	CTL B	HDD Data Overwrite Security SD card error
		The 'all delete' function cannot be executed but the Data Overwrite Security Unit (B735) is installed and activated.
		• Defective SD card (B735) • SD card (B735) not installed
		1. Replace the NVRAM and then install the new SD card (B735). 2. Check and reinstall the SD card (B735).

No.	Type	Details (Symptom, Possible Cause, Troubleshooting Procedures)
878	CTL D	TPM authentication error
		The authentication information mismatch between TPM and USB flash ROM on the controller board occurs.
		• Incorrect system updating • USB flash ROM defective
		Replace the controller board.

No.	Type	Details (Symptom, Possible Cause, Troubleshooting Procedures)
899		Software Error
		A software error occurred in the GW controller.
		1. Update all the firmware to the latest one. 2. If above action did not solve the issue, replace the GW controller

Service Call Tables - 9

SC900: Miscellaneous

No.	Type	Details (Symptom, Possible Cause, Troubleshooting Procedures)
900	CTL D	Electric counter error
		Abnormal data in the counters.
		• Defective NVRAM • Defective controller
		1. Check the connection between the NVRAM and controller. 2. Replace the NVRAM. 3. Replace the controller.

No.	Type	Details (Symptom, Possible Cause, Troubleshooting Procedures)
910	CTL B	External Controller Error 1
911		External Controller Error 2
912		External Controller Error 3
913		External Controller Error 4
914		External Controller Error 5
-	-	The external controller alerted the machine about an error.
-	-	• Please refer to the instructions for the external controller (application).

No.	Type	Details (Symptom, Possible Cause, Troubleshooting Procedures)
919	CTL D	External controller down
		The EAC received an interrupt signal from the FLUTE serial driver during print jobs in progress and the connection between the copier and external controller was broken. Note: The EAC is the External Api Converter.
		• Switch the machine off and on.

No.	Type	Details (Symptom, Possible Cause, Troubleshooting Procedures)
920	CTL D	Printer application error
		An error is detected in the printer application program.
		• Defective software • Unexpected hardware resource (e.g., memory shortage)
		1. Software defective; switch off/on, or change the controller firmware if the problem is not solved 2. Insufficient memory

No.	Type	Details (Symptom, Possible Cause, Troubleshooting Procedures)
921	CTL D	Printer font error
		A necessary font is not found in the SD card.
		• A necessary font is not found in the SD card. • The SD card data is corrupted.
		1. Check that the SD card has the correct data.

No.	Type	Details (Symptom, Possible Cause, Troubleshooting Procedures)
990	CTL D	Software performance error
		The software makes an unexpected operation.
		• Defective software • Defective controller • Software error
		1. Turn the main switch off and on. 2. Reinstall the controller and/or engine main firmware.
		Note • See Note 1 at the end of the SC table.

No.	Type	Details (Symptom, Possible Cause, Troubleshooting Procedures)
991	CTL C	Software continuity error
		The software has attempted to perform an unexpected operation. However, unlike SC 990, the object of the error is continuity of the software.
		• Software program error • Internal parameter incorrect, insufficient working memory.
		1. This SC is not displayed on the LCD (logging only).

No.	Type	Details (Symptom, Possible Cause, Troubleshooting Procedures)
992	CTL D	Undefined error
		Defective software program
		• An error undetectable by any other SC code occurred

No.	Type	Details (Symptom, Possible Cause, Troubleshooting Procedures)
997	CTL B	Application function selection error • The application selected by the operation panel key does not start or ends abnormally.
		• Software (including the software configuration) defective • An option required by the application (RAM, DIMM, board) is not installed • Nesting of the fax group addresses is too complicated
		1. Check the devices necessary for the application program. If necessary devices have not been installed, install them. 2. Check that application programs are correctly configured. 3. For a fax operation problem, simplify the nesting of the fax group addresses. 4. Take necessary countermeasures specific to the application program. If the logs can be displayed on the operation panel, see the logs.

No.	Type	Details (Symptom, Possible Cause, Troubleshooting Procedures)
998	CTL D	Application start error
		No applications start within 60 seconds after the power is turned on.
		• Loose connection of RAM-DIMM, ROM-DIMM • Defective controller • Software problem
		1. Check the setting of SP5875-001. If the setting is set to "1 (OFF)", change it to "0 (OFF)". 2. Check if the RAM-DIMM and ROM-DIMM are correctly connected. 3. Reinstall the controller system firmware. 4. Replace the controller.

Note 1

If a problem always occurs in a specific condition (for example. printer driver setting, image file), the problem may be caused by a software error. In this case, the following data and information needs to be sent back to your product specialist. Please understand that it may take some time to get a reply on how to solve the problem, because in some cases the design staff in Japan must analyze the data.

- Symptom / Possible Causes / Action taken
- SMC - All (SP5-990-001)
- SMC - Logging (SP5-990-004)
- Printer driver settings used when the problem occurs
- All data displayed on the screen (SC code, error code, and program address where the problem is logged.)
- Image file which causes the problem, if possible

4. Appendix: Service Program Mode Tables

System SP1-xxx: 1

SP1-xxx Feed

1002*	Side-to-Side Regist Adjustment
001	Main-scan
	Adjusts the laser scanning timing in the main scan direction. [-10 to 10 / **0** / 0.1 mm]

1003*	Paper Buckle Adjustment
001	Plain Paper
	Adjusts the paper buckle for plain paper mode. [0 to 10 / **6** / 1 mm]

1004*	Leading Edge Regist Adjustment
001	Sub-scan
	Adjusts the leading edge registration. [-10 to 10 / **0** / 0.1 mm]

1104*	Fusing Temp Control 2
101	Plain:Weight 1
	[100 to 200 / **145** / 1°C]
102	Plain:Weight 2
	[100 to 200 / **150** / 1°C]

103	Plain:Weight 3
	[100 to 200 / **155** / 1°C]
104	Plain:Weight 4
	[100 to 200 / **165** / 1°C]
105	Plain:Weight 5
	[100 to 200 / **175** / 1°C]
106	Plain:Weight 6
	[100 to 200 / **175** / 1°C]
107	Plain:Weight 7
	[100 to 200 / **175** / 1°C]
109	Matte:Weight 2
	[100 to 200 / **145** / 1°C]
110	Matte:Weight 3
	[100 to 200 / **150** / 1°C]
111	Matte:Weight 4
	[100 to 200 / **155** / 1°C]
112	Matte:Weight 5
	[100 to 200 / **165** / 1°C]
113	Matte:Weight 6
	[100 to 200 / **175** / 1°C]
114	Matte:Weight 7
	[100 to 200 / **175** / 1°C]
116	Glossy:Weight 2
	[100 to 200 / **140** / 1°C]
117	Glossy:Weight 3
	[100 to 200 / **150** / 1°C]

118	Glossy:Weight 4
	[100 to 200 / **160** / 1°C]
119	Glossy:Weight 5
	[100 to 200 / **170** / 1°C]
120	Glossy:Weight 6
	[100 to 200 / **175** / 1°C]
121	Glossy:Weight 7
	[100 to 200 / **180** / 1°C]
122	Envelope:Weight 5
	[100 to 200 / **175** / 1°C]
123	Envelope:Weight 6
	[100 to 200 / **175** / 1°C]
124	Envelope:Weight 7
	[100 to 200 / **175** / 1°C]

1105*	Fusing Temp Control 1
029	Htg Roll: Reload
	Adjusts the reload temperature of the heating roller. [100 to 200 / **165** / 1°C]
030	Htg Roll: Rotation after Reload
	Adjusts the threshold temperature for the idle rotation of the heating roller after reload. [100 to 200 / **165** / 1°C]
031	Htg Roll: Stand-by: Normal Temp.
	Adjusts the target temperature of the heating roller in stand-by mode for normal temperature. [100 to 200 / **165** / 1°C]

032	Htg Roll: Stand-by:Low Temp.
	Adjusts the target temperature of the heating roller in stand-by mode for low temperature. [100 to 200 / **175** / 1°C]
033	Htg Roll: Stand-by:High Temp.
	Adjusts the target temperature of the heating roller in stand-by mode for high temperature. [100 to 200 / **165** / 1°C]

1107*	Mode Shift Setting
001	Add Temp:Weight 1
	Adjusts the additional temperature at 1st printing for weight 1 paper. [0 to 30 / **10** / 1 deg]
002	Add Temp:Weight 2
	Adjusts the additional temperature at 1st printing for weight 2 paper. [0 to 30 / **10** / 1 deg]
003	Add Temp:Weight 3
	Adjusts the additional temperature at 1st printing for weight 3 paper. [0 to 30 / **10** / 1 deg]
004	Add Temp:Weight 4
	Adjusts the additional temperature at 1st printing for weight 4 paper. [0 to 30 / **15** / 1 deg]
005	Add Temp:Weight 5
	Adjusts the additional temperature at 1st printing for weight 5 paper. [0 to 30 / **15** / 1 deg]
006	Add Temp:Weight 6
	Adjusts the additional temperature at 1st printing for weight 6 paper. [0 to 30 / **20** / 1 deg]

007	Add Temp:Weight 7
	Adjusts the additional temperature at 1st printing for weight 7 paper. [0 to 30 / **20** / 1 deg]
009	Overshoot Prevent Temp.
	Adjusts the threshold temperature for executing fusing idle rotation to prevent the overheating of the fusing unit. [0 to 250 / **220** / 1 deg]
010	Overshoot Prevent Time
	Adjusts the time of the fusing idle rotation. [0 to 100 / **20** / 1 sec.]
018	Low Temp On/Off
	Adjusts the threshold temperature for the low temperature condition. [10 to 23 / **17** / 1°C]
019	High Temp On/Off
	Adjusts the threshold temperature for the high temperature condition. [24 to 40 / **28** / 1°C]
020	Low Temp:Reload
	Adjusts the temperature to be added to the reload temperature in the low temperature condition. [0 to 15 / **5** / 1°C]
021	High Temp:Reload
	Adjusts the temperature to be subtracted from the reload temperature in the high temperature condition. [0 to 15 / **0** / 1°C]
022	Low Temp:Feed
	Adjusts the additional temperature to the paper feeding temperature in the low temperature condition [0 to 15 / **13** / 1°C]

023	High Temp:Feed
	Adjusts the subtractive temperature to the paper feeding temperature in the high temperature condition [0 to 15 / **0** / 1°C]
024	Fuser Roll Sensor ON/OFF
	Enables or disables the function of the hot roller thermistor. [0 or 1 / **1** / -] 0: Disable, 1: Enable
025	Reload Permit:Fuser Roll Temp
	Adjusts the threshold temperature of the hot roller thermistor for the reload mode. [0 to 70 / **10** / 1°C]
026	Fsr Core:Low Threshold Temp
	Adjusts the threshold temperature of the hot roller thermistor between low temperature and normal temperature. [0 to 100 / **50** / 1°C]
027	Fsr Core:High Threshold Temp
	Adjusts the threshold temperature of the hot roller thermistor between normal temperature and high temperature. [0 to 100 / **70** / 1°C]
028	Fsr Core:Low Temp:Fuser Speed
	Adjusts the additional line speed rate in the low temperature condition judged by the hot roller thermistor just after the machine's power-on. [-10 to 10 / **2.5** / 0.1 %]
029	Additional Temp:Thin
	Adjusts the additional line speed rate in the high temperature condition judged by the hot roller thermistor just after the machine's power-on. [-10 to 10 / **1** / 0.1 %]
030	Fsr Core:Low Temp:Stand-by
	[0 to 15 / **5** / 1°C]

031	Fsr Core:High Temp:Stand-by
	[0 to 15 / **0** / 1°C]
032	Fsr Core:Low Temp:Feed
	[0 to 15 / **5** / 1°C]
033	Fsr Core:High Temp:Feed
	[0 to 15 / **0** / 1°C]
034	Idle Time:After Reload
	[0 to 60 / **7** / 1 min]
035	Additional Temp:Time
	[0 to 50 / **20** / 1 sec]
036	Reload Extension: Low Temp
	[0 to 255 / **150** / 1 sec]
038	Idle Rotation:Standby:Temp
	[0 to 150 / **80** / 1 deg]
039	Idle Rotation:Standby:Time
	[0 to 360 / **30** / 1 sec]
077	H-Limit:Htg Roll:Feed Plain 1
	[0 to 50 / **0** / 1 deg]
078	L-Limit:Htg Roll:Feed Plain 1
	[0 to 50 / **5** / 1 deg]
079	H-Limit:Htg Roll:Feed Plain 2
	[0 to 50 / **0** / 1 deg]
080	L-Limit:Htg Roll:Feed Plain 2
	[0 to 50 / **5** / 1 deg]
081	H-Limit:Htg Roll:Feed Plain 3
	[0 to 50 / **0** / 1 deg]

082	L-Limit:Htg Roll:Feed Plain 3
	[0 to 50 / **5** / 1 deg]
083	H-Limit:Htg Roll:Feed Plain 4
	[0 to 50 / **5** / 1 deg]
084	L-Limit:Htg Roll:Feed Plain 4
	[0 to 50 / **5** / 1 deg]
085	H-Limit:Htg Roll:Feed Plain 5
	[0 to 50 / **5** / 1 deg]
086	L-Limit:Htg Roll:Feed Plain 5
	[0 to 50 / **5** / 1 deg]
087	H-Limit:Htg Roll:Feed Plain 6
	[0 to 50 / **5** / 1 deg]
088	L-Limit:Htg Roll:Feed Plain 6
	[0 to 50 / **5** / 1 deg]
089	H-Limit:Htg Roll:Feed Plain 7
	[0 to 50 / **5** / 1 deg]
090	L-Limit:Htg Roll:Feed Plain 7
	[0 to 50 / **5** / 1 deg]
091	L-Limit:Pr Roll:Feed Plain 1
	[0 to 50 / **20** / 1 deg]
092	H-Limit:Pr Roll:Feed Plain 1
	[0 to 50 / **20** / 1 deg]
093	L-Limit:Pr Roll:Feed Plain 2
	[0 to 50 / **20** / 1 deg]
094	H-Limit:Pr Roll:Feed Plain 2
	[0 to 50 / **20** / 1 deg]

095	L-Limit:Pr Roll:Feed Plain 3
	[0 to 50 / **20** / 1 deg]
096	H-Limit:Pr Roll:Feed Plain 3
	[0 to 50 / **20** / 1 deg]
097	L-Limit:Pr Roll:Feed Plain 4
	[0 to 50 / **20** / 1 deg]
098	H-Limit:Pr Roll:Feed Plain 4
	[0 to 50 / **20** / 1 deg]
099	L-Limit:Pr Roll:Feed Plain 5
	[0 to 50 / **20** / 1 deg]
100	H-Limit:Pr Roll:Feed Plain 5
	[0 to 50 / **20** / 1 deg]
101	L-Limit:Pr Roll:Feed Plain 6
	[0 to 50 / **20** / 1 deg]
102	H-Limit:Pr Roll:Feed Plain 6
	[0 to 50 / **20** / 1 deg]
103	L-Limit:Pr Roll:Feed Plain 7
	[0 to 50 / **20** / 1 deg]
104	H-Limit:Pr Roll:Feed Plain 7
	[0 to 50 / **20** / 1 deg]
107	H-Limit:Htg Roll:Feed Coated 2
	[0 to 50 / **0** / 1 deg]
108	L-Limit:Htg Roll:Feed Coated 2
	[0 to 50 / **5** / 1 deg]
109	H-Limit:Htg Roll:Feed Coated 3
	[0 to 50 / **0** / 1 deg]

110	L-Limit:Htg Roll:Feed Coated 3
	[0 to 50 / **5** / 1 deg]
111	H-Limit:Htg Roll:Feed Coated 4
	[0 to 50 / **5** / 1 deg]
112	L-Limit:Htg Roll:Feed Coated 4
	[0 to 50 / **5** / 1 deg]
113	H-Limit:Htg Roll:Feed Coated 5
	[0 to 50 / **5** / 1 deg]
114	L-Limit:Htg Roll:Feed Coated 5
	[0 to 50 / **5** / 1 deg]
115	H-Limit:Htg Roll:Feed Coated 6
	[0 to 50 / **5** / 1 deg]
116	L-Limit:Htg Roll:Feed Coated 6
	[0 to 50 / **5** / 1 deg]
117	H-Limit:Htg Roll:Feed Coated 7
	[0 to 50 / **5** / 1 deg]
118	L-Limit:Htg Roll:Feed Coated 7
	[0 to 50 / **5** / 1 deg]
121	L-Limit:Pr Roll:Feed Coated 2
	[0 to 50 / **20** / 1 deg]
122	H-Limit:Pr Roll:Feed Coated 2
	[0 to 50 / **20** / 1 deg]
123	L-Limit:Pr Roll:Feed Coated 3
	[0 to 50 / **20** / 1 deg]
124	H-Limit:Pr Roll:Feed Coated 3
	[0 to 50 / **20** / 1 deg]

125	L-Limit:Pr Roll:Feed Coated 4
	[0 to 50 / **20** / 1 deg]
126	H-Limit:Pr Roll:Feed Coated 4
	[0 to 50 / **20** / 1 deg]
127	L-Limit:Pr Roll:Feed Coated 5
	[0 to 50 / **20** / 1 deg]
128	H-Limit:Pr Roll:Feed Coated 5
	[0 to 50 / **20** / 1 deg]
129	L-Limit:Pr Roll:Feed Coated 6
	[0 to 50 / **20** / 1 deg]
130	H-Limit:Pr Roll:Feed Coated 6
	[0 to 50 / **20** / 1 deg]
131	L-Limit:Pr Roll:Feed Coated 7
	[0 to 50 / **20** / 1 deg]
132	H-Limit:Pr Roll:Feed Coated 7
	[0 to 50 / **20** / 1 deg]
133	L-Limit Temp Correction
	[-30 to 30 / **-30** / 1 deg]
134	H-Limit Temp Correction
	[-30 to 30 / **30** / 1 deg]
141	Idle Rotation after Feed:Time
	[0 to 60 / **10** / 1 sec.]
143	Low Temp Coeff:Htg Roll:Feed
	[0 to 3 / **1** / 0.1]
144	High Temp Coeff:Htg Roll:Feed
	[0 to 3 / **1** / 0.1]

145	Low Temp Coeff:Press Roll:Feed
	[0 to 3 / **1** / 0.1]
146	High Temp Coeff:Press Roll:Feed
	[0 to 3 / **1** / 0.1]

System SP1-xxx: 2

1108*	Fusing Temp Control 3
101	Plain:Weight 1
	[0 to 200 / **100** / 1°C]
102	Plain:Weight 2
	[0 to 200 / **100** / 1°C]
103	Plain:Weight 3
	[0 to 200 / **100** / 1°C]
104	Plain:Weight 4
	[0 to 200 / **100** / 1°C]
105	Plain:Weight 5
	[0 to 200 / **100** / 1°C]
106	Plain:Weight 6
	[0 to 200 / **100** / 1°C]
107	Plain:Weight 7
	[0 to 200 / **100** / 1°C]
109	Matte:Weight 2
	[0 to 200 / **100** / 1°C]
110	Matte:Weight 3
	[0 to 200 / **100** / 1°C]
111	Matte:Weight 4
	[0 to 200 / **100** / 1°C]
112	Matte:Weight 5
	[0 to 200 / **100** / 1°C]

113	Matte:Weight 6
	[0 to 200 / **100** / 1°C]
114	Matte:Weight 7
	[0 to 200 / **100** / 1°C]
116	Glossy:Weight 2
	[0 to 200 / **100** / 1°C]
117	Glossy:Weight 3
	[0 to 200 / **100** / 1°C]
118	Glossy:Weight 4
	[0 to 200 / **100** / 1°C]
119	Glossy:Weight 5
	[0 to 200 / **100** / 1°C]
120	Glossy:Weight 6
	[0 to 200 / **100** / 1°C]
121	Glossy:Weight 7
	[0 to 200 / **100** / 1°C]
122	Envelope:Weight 5
	[0 to 200 / **100** / 1°C]
123	Envelope:Weight 6
	[0 to 200 / **100** / 1°C]
124	Envelope:Weight 7
	[0 to 200 / **100** / 1°C]

1109*	Fusing Temp Change
007	Temperature 1
	[–20 to 20 / **0** / 1°C]

008	Temperature 2
	[–20 to 20 / **–5** / 1°C]
009	Temperature 3
	[–20 to 20 / **0** / 1°C]
010	Temperature 4
	[–20 to 20 / **–5** / 1°C]
011	Temperature 5
	[–20 to 20 / **0** / 1°C]
012	Temperature 6
	[–20 to 20 / **–5** / 1°C]
013	Temperature 7
	[–20 to 20 / **0** / 1°C]
014	Temperature 8
	[–20 to 20 / **–5** / 1°C]
015	Control Time A
	[1 to 500 / **30** / 1 sec]
016	Control Time B
	[1 to 500 / **100** / 1 sec]
017	Control Time C
	[1 to 500 / **30** / 1 sec]
018	Control Time D
	[1 to 500 / **100** / 1 sec]
019	Paper Weight 1
	[0 or 1/ **0** / -]
020	Paper Weight 2
	[0 or 1/ **0** / -]

021	Paper Weight 3
	[0 or 1/ **0** / -]
022	Paper Weight 4
	[0 or 1/ **0** / -]
023	Paper Weight 5
	[0 or 1/ **0** / -]
024	Paper Weight 6
	[0 or 1/ **0** / -]
025	Paper Weight 7
	[0 or 1/ **0** / -]

1113*	1st Power On Thresh. Temp
001	Adjusts the threshold temperature for the 1st power-on.
	[0 to 100 / **60** / 1°C]

1141*	Fusing SC Issue Time Info
001	SC Number
	Displays the fusing SC number.
002	SC Cause
	Displays the fusing SC cause.
101	Htg Roller Thermopile 1
	Displays the thermopile temperature of the heating roller when an SC was issued.
102	Prs Roller Thermopile 2
	Displays the thermopile temperature of the pressure roller when an SC was issued.
103	Htg Roller Thermistor 1
	Displays the thermistor temperature of the heating roller when an SC was issued.

104	Fsr Roller Thermistor 2
	Displays the thermistor temperature of the fusing belt when an SC was issued.
105	Fsr Core Thermistor 3
	Displays the thermistor temperature of the hot roller when an SC was issued.

1159*	Fusing SC Setting
001	3 Jams SC 0:OFF/1:ON
	Turns on or off the SC detection for three consecutive jams at the fusing unit. [**0**: OFF, 1:ON]

1161*	Process Speed
	Selects the process line speed for each type of paper. 0: Normal Speed, 1: Slowdown
101	Plain:Weight 1
	[0 or 1 / **0** / -]
102	Plain:Weight 2
	[0 or 1 / **0** / -]
103	Plain:Weight 3
	[0 or 1 / **0** / -]
104	Plain:Weight 4
	[0 or 1 / **0** / -]
105	Plain:Weight 5
	[0 or 1 / **0** / -]
106	Plain:Weight 6
	[0 or 1 / **0** / -]
107	Plain:Weight 7
	[0 or 1 / **0** / -]

109	Matte:Weight 2
	[0 or 1 / **0** / -]
110	Matte:Weight 3
	[0 or 1 / **0** / -]
111	Matte:Weight 4
	[0 or 1 / **0** / -]
112	Matte:Weight 5
	[0 or 1 / **0** / -]
113	Matte:Weight 6
	[0 or 1 / **0** / -]
114	Matte:Weight 7
	[0 or 1 / **0** / -]
116	Glossy:Weight 2
	[0 or 1 / **0** / -]
117	Glossy:Weight 3
	[0 or 1 / **0** / -]
118	Glossy:Weight 4
	[0 or 1 / **0** / -]
119	Glossy:Weight 5
	[0 or 1 / **0** / -]
120	Glossy:Weight 6
	[0 or 1 / **0** / -]
121	Glossy:Weight 7
	[0 or 1 / **0** / -]
122	Envelope:Weight 5
	[0 or 1 / **0** / -]

123	Envelope:Weight 6
	[0 or 1 / **0** / -]
124	Envelope:Weight 7
	[0 or 1 / **0** / -]

1191*	L Temp:CPM Down
	Selects the CPM down level in the low temperature condition for each paper type. 0: No CPM Down, 1: CPM Down 1, 2: CPM Down 2, 3: CPM Down 3
101	Plain:Weight 1
	[0 to 3 / **0** / -]
102	Plain:Weight 2
	[0 to 3 / **0** / -]
103	Plain:Weight 3
	[0 to 3 / **0** / -]
104	Plain:Weight 4
	[0 to 3 / **0** / -]
105	Plain:Weight 5
	[0 to 3 / **0** / -]
106	Plain:Weight 6
	[0 to 3 / **3** / -]
107	Plain:Weight 7
	[0 to 3 /**3** / -]
109	Matte:Weight 2
	[0 to 3 / **0** / -]
110	Matte:Weight 3
	[0 to 3 / **0** / -]

111	Matte:Weight 4
	[0 to 3 / **0** / -]
112	Matte:Weight 5
	[0 to 3 / **0** / -]
113	Matte:Weight 6
	[0 to 3 / **3** / -]
114	Matte:Weight 7
	[0 to 3 / **3** / -]
116	Glossy:Weight 2
	[0 to 3 / **0** / -]
117	Glossy:Weight 3
	[0 to 3 / **0** / -]
118	Glossy:Weight 4
	[0 to 3 / **0** / -]
119	Glossy:Weight 5
	[0 to 3 / **0** / -]
120	Glossy:Weight 6
	[0 to 3 / **3** / -]
121	Glossy:Weight 7
	[0 to 3 / **3** / -]
122	Envelope:Weight 5
	[0 to 3 / **0** / -]
123	Envelope:Weight 6
	[0 to 3 / **0** / -]
124	Envelope:Weight 7
	[0 to 3 / **0** / -]

1200*	Over N-Temp:CPM Down
	Selects the CPM down level in the medium temperature condition for each paper type. 0: No CPM Down, 1: CPM Down 1, 2: CPM Down 2, 3: CPM Down 3
101	Plain:Weight 1
	[0 to 3 / **0** / -]
102	Plain:Weight 2
	[0 to 3 / **0** / -]
103	Plain:Weight 3
	[0 to 3 / **0** / -]
104	Plain:Weight 4
	[0 to 3 / **0** / -]
105	Plain:Weight 5
	[0 to 3 / **0** / -]
106	Plain:Weight 6
	[0 to 3 / **0** / -]
107	Plain:Weight 7
	[0 to 3 / **0** / -]
109	Matte:Weight 2
	[0 to 3 / **0** / -]
110	Matte:Weight 3
	[0 to 3 / **0** / -]
111	Matte:Weight 4
	[0 to 3 / **0** / -]
112	Matte:Weight 5
	[0 to 3 / **0** / -]

113	Matte:Weight 6
	[0 to 3 / **0** / -]
114	Matte:Weight 7
	[0 to 3 / **0** / -]
116	Glossy:Weight 2
	[0 to 3 / **0** / -]
117	Glossy:Weight 3
	[0 to 3 / **0** / -]
118	Glossy:Weight 4
	[0 to 3 / **0** / -]
119	Glossy:Weight 5
	[0 to 3 / **0** / -]
120	Glossy:Weight 6
	[0 to 3 / **0** / -]
121	Glossy:Weight 7
	[0 to 3 / **0** / -]
122	Envelope:Weight 5
	[0 to 3 / **0** / -]
123	Envelope:Weight 6
	[0 to 3 / **0** / -]
124	Envelope:Weight 7
	[0 to 3 / **0** / -]

1201*	CPM Down Setting
001	L Temp:CPM Down Temp
	[–50 to 10 / **–30** / 1°C]

002	L Temp:CPM Up Temp
	[–50 to -8 / **–8** / 1°C]
003	L Temp:1st CPM Down
	[10 to 100 / **80** / 10 %]
004	L Temp:2nd CPM Down
	[10 to 100 / **60** / 10 %]
005	L Temp:3rd CPM Down
	[10 to 100 / **40** / 10 %]
006	H Temp:1st CPM Down
	[10 to 100 / **80** / 10 %]
007	H Temp:2nd CPM Down
	[10 to 100 / **60** / 10 %]
008	H Temp:3rd CPM Down
	[10 to 100 / **40** / 10 %]
009	H Temp:1st CPM Down Temp
	[160 to 240 / **215** / 1°C]
010	H Temp:2nd CPM Down Temp
	[160 to 240 / **219** / 1°C]
011	H Temp:3rd CPM Down Temp
	[160 to 240 / **222** / 1°C]
024	CPM Judge Interval
	[1 to 255 / **10** / 1 sec]
025	L Temp:CPM Down:Weight 1
	[0 to 3 / **0** / 1] 0: No CPM Down, 1: CPM Down 1, 2: CPM Down 2, 3: CPM Down 3
026	L Temp:CPM Down:Weight 2

	[0 to 3 / **0** / 1] 0: No CPM Down, 1: CPM Down 1, 2: CPM Down 2, 3: CPM Down 3
027	L Temp:CPM Down:Weight 3
	[0 to 3 / **0** / 1] 0: No CPM Down, 1: CPM Down 1, 2: CPM Down 2, 3: CPM Down 3
028	L Temp:CPM Down:Weight 4
	[0 to 3 / **0** / 1] 0: No CPM Down, 1: CPM Down 1, 2: CPM Down 2, 3: CPM Down 3
029	L Temp:CPM Down:Weight 5
	[0 to 3 / **0** / 1] 0: No CPM Down, 1: CPM Down 1, 2: CPM Down 2, 3: CPM Down 3
030	L Temp:CPM Down:Weight 6
	[0 to 3 / **3** / 1] 0: No CPM Down, 1: CPM Down 1, 2: CPM Down 2, 3: CPM Down 3
031	L Temp:CPM Down:Weight 7
	[0 to 3 / **3** / 1] 0: No CPM Down, 1: CPM Down 1, 2: CPM Down 2, 3: CPM Down 3
032	Over L-Temp:CPM Down:Weight 1
	[0 to 3 / **0** / 1] 0: No CPM Down, 1: CPM Down 1, 2: CPM Down 2, 3: CPM Down 3
033	Over L-Temp:CPM Down:Weight 2
	[0 to 3 / **0** / 1] 0: No CPM Down, 1: CPM Down 1, 2: CPM Down 2, 3: CPM Down 3
034	Over L-Temp:CPM Down:Weight 3
	[0 to 3 / **0** / 1] 0: No CPM Down, 1: CPM Down 1, 2: CPM Down 2, 3: CPM Down 3
035	Over L-Temp:CPM Down:Weight 4

	[0 to 3 / **0** / 1] 0: No CPM Down, 1: CPM Down 1, 2: CPM Down 2, 3: CPM Down 3
036	Over L-Temp:CPM Down:Weight 5
	[0 to 3 / **0** / 1] 0: No CPM Down, 1: CPM Down 1, 2: CPM Down 2, 3: CPM Down 3
037	Over L-Temp:CPM Down:Weight 6
	[0 to 3 / **0** / 1] 0: No CPM Down, 1: CPM Down 1, 2: CPM Down 2, 3: CPM Down 3
038	Over L-Temp:CPM Down:Weight 7
	[0 to 3 / **0** / 1] 0: No CPM Down, 1: CPM Down 1, 2: CPM Down 2, 3: CPM Down 3

1202*	Low Power Mode
001	Htg Roll Temp:Low Power Mode
	[0 to 150 / **110** / 1°C]

1206*	Paper Shift Setting
001	Shift Mode Selection
	Selects the paper shift mode. The paper feeding position on the fusing belt is shifted at specific interval (number of outputs) to prevent uneven wearing of the fusing belt if this setting is set to "0" or "2". The setting "2" is recommended for a machine which has a finisher with the punch unit, Ring Binder or Perfect Binder. [0 to 2 / **0** / 1] 0: Shift: On; 1: Shift: Off; 2: Shift: Off (Punch Mode)

1207*	Fixed Paper Intrvl (Fixed Paper Interval Setting)
	Adjusts the interval of feeding paper. These SPs are effective only when fixed feeding paper is selected. [0 to 10 / **0** / 0.1 mm/step]
101	Plain:Weight 1

	[0 to 10 / **0** / 0.1]
102	Plain:Weight 2
	[0 to 10 / **0** / 0.1]
103	Plain:Weight 3
	[0 to 10 / **0** / 0.1]
104	Plain:Weight 4
	[0 to 10 / **0** / 0.1]
105	Plain:Weight 5
	[0 to 10 / **0** / 0.1]
106	Plain:Weight 6
	[0 to 10 / **0** / 0.1]
107	Plain:Weight 7
	[0 to 10 / **0** / 0.1]
109	Matte:Weight 2
	[0 to 10 / **0** / 0.1]
110	Matte:Weight 3
	[0 to 10 / **0** / 0.1]
111	Matte:Weight 4
	[0 to 10 / **0** / 0.1]
112	Matte:Weight 5
	[0 to 10 / **0** / 0.1]
113	Matte:Weight 6
	[0 to 10 / **0** / 0.1]
114	Matte:Weight 7
	[0 to 10 / **0** / 0.1]
116	Glossy:Weight 2

	[0 to 10 / **0** / 0.1]
117	Glossy:Weight 3
	[0 to 10 / **0** / 0.1]
118	Glossy:Weight 4
	[0 to 10 / **0** / 0.1]
119	Glossy:Weight 5
	[0 to 10 / **0** / 0.1]
120	Glossy:Weight 6
	[0 to 10 / **0** / 0.1]
121	Glossy:Weight 7
	[0 to 10 / **0** / 0.1]
122	Envelope:Weight 5
	[0 to 10 / **0** / 0.1]
123	Envelope:Weight 6
	[0 to 10 / **0** / 0.1]
124	Envelope:Weight 7
	[0 to 10 / **0** / 0.1]

1208	Fusing Temp Control 4
002	Press Roll Ctr:Reload
	Adjusts the reload temperature of the pressure roller. [70 to 160 / **100** / 1°C /step]
003	Press Roll Ctr:Idle:Reload
	Adjusts the temperature of the pressure roller during the extra idle rotation after the reload. [70 to 160 / **100** / 1°C /step]

004	Press Roll Ctr:Standby:Normal Temp
	Adjusts the target temperature of the pressure roller in the stand-by mode of the normal temperature condition. [70 to 160 / **100** / 1°C /step]
005	Press Roll Ctr:Standby:Low Temp
	Adjusts the target temperature of the pressure roller in the stand-by mode of the low temperature condition. [70 to 160 / **100** / 1°C /step]
006	Press Roll Ctr:Standby:High Temp
	Adjusts the target temperature of the pressure roller in the stand-by mode of the high temperature condition. [70 to 160 / **100** / 1°C /step]
013	Press Roll Temp:Low Power Mode
	Adjusts the target temperature of the pressure roller in the low power mode. [70 to 150 / **100** / 1°C /step]

1209*	Productivity Up Mode
	Configures the settings of the productivity priority mode.
001	Productivity Up:ON/OFF
	Turns on or off the productivity priority mode. If this setting is set to "1", waiting time is reduced. [0 or 1 / **0** / -] 0: OFF, 1: ON
002	L Temp:CPM Up Temp
	Specifies the threshold temperature for the CPM Up when the productivity priority mode is selected. [-50 to -8 / **-20** / 1 deg]
003	L-Limit:Htg Roll:Feed Plain 1
	[0 to 50 / **10** / 1 deg]
004	H-Limit:Htg Roll:Feed Plain 1

	[0 to 50 / **15** / 1 deg]
005	L-Limit:Htg Roll:Feed Plain 2
	[0 to 50 / **10** / 1 deg]
006	H-Limit:Htg Roll:Feed Plain 2
	[0 to 50 / **15** / 1 deg]
007	L-Limit:Htg Roll:Feed Plain 3
	[0 to 50 / **10** / 1 deg]
008	H-Limit:Htg Roll:Feed Plain 3
	[0 to 50 / **15** / 1 deg]
009	L-Limit:Htg Roll:Feed Plain 4
	[0 to 50 / **10** / 1 deg]
010	H-Limit:Htg Roll:Feed Plain 4
	[0 to 50 / **15** / 1 deg]
011	L-Limit:Htg Roll:Feed Plain 5
	[0 to 50 / **10** / 1 deg]
012	H-Limit:Htg Roll:Feed Plain 5
	[0 to 50 / **15** / 1 deg]
013	L-Limit:Htg Roll:Feed Plain 6
	[0 to 50 / **10** / 1 deg]
014	H-Limit:Htg Roll:Feed Plain 6
	[0 to 50 / **15** / 1 deg]
015	L-Limit:Htg Roll:Feed Plain 7
	[0 to 50 / **10** / 1 deg]
016	H-Limit:Htg Roll:Feed Plain 7
	[0 to 50 / **15** / 1 deg]
017	L-Limit:Pr Roll:Feed Plain 1

	[0 to 50 / **30** / 1 deg]
018	H-Limit:Pr Roll:Feed Plain 1
	[0 to 50 / **30** / 1 deg]
019	L-Limit:Pr Roll:Feed Plain 2
	[0 to 50 / **30** / 1 deg]
020	H-Limit:Pr Roll:Feed Plain 2
	[0 to 50 / **30** / 1 deg]
021	L-Limit:Pr Roll:Feed Plain 3
	[0 to 50 / **30** / 1 deg]
022	H-Limit:Pr Roll:Feed Plain 3
	[0 to 50 / **30** / 1 deg]
023	L-Limit:Pr Roll:Feed Plain 4
	[0 to 50 / **30** / 1 deg]
024	H-Limit:Pr Roll:Feed Plain 4
	[0 to 50 / **30** / 1 deg]
025	L-Limit:Pr Roll:Feed Plain 5
	[0 to 50 / **30** / 1 deg]
026	H-Limit:Pr Roll:Feed Plain 5
	[0 to 50 / **30** / 1 deg]
027	L-Limit:Pr Roll:Feed Plain 6
	[0 to 50 / **30** / 1 deg]
028	H-Limit:Pr Roll:Feed Plain 6
	[0 to 50 / **30** / 1 deg]
029	L-Limit:Pr Roll:Feed Plain 7
	[0 to 50 / **30** / 1 deg]
030	H-Limit:Pr Roll:Feed Plain 7

	[0 to 50 / **30** / 1 deg]
031	L-Limit:Htg Roll:Feed Coated 2
	[0 to 50 / **10** / 1 deg]
032	H-Limit:Htg Roll:Feed Coated 2
	[0 to 50 / **15** / 1 deg]
033	L-Limit:Htg Roll:Feed Coated 3
	[0 to 50 / **10** / 1 deg]
034	H-Limit:Htg Roll:Feed Coated 3
	[0 to 50 / **15** / 1 deg]
035	L-Limit:Htg Roll:Feed Coated 4
	[0 to 50 / **10** / 1 deg]
036	H-Limit:Htg Roll:Feed Coated 4
	[0 to 50 / **15** / 1 deg]
037	L-Limit:Htg Roll:Feed Coated 5
	[0 to 50 / **10** / 1 deg]
038	H-Limit:Htg Roll:Feed Coated 5
	[0 to 50 / **15** / 1 deg]
039	L-Limit:Htg Roll:Feed Coated 6
	[0 to 50 / **10** / 1 deg]
040	H-Limit:Htg Roll:Feed Coated 6
	[0 to 50 / **15** / 1 deg]
041	L-Limit:Htg Roll:Feed Coated 7
	[0 to 50 / **10** / 1 deg]
042	H-Limit:Htg Roll:Feed Coated 7
	[0 to 50 / **15** / 1 deg]
043	L-Limit:Pr Roll:Feed Coated 2

	[0 to 50 / **30** / 1 deg]
044	H-Limit:Pr Roll:Feed Coated 2
	[0 to 50 / **30** / 1 deg]
045	L-Limit:Pr Roll:Feed Coated 3
	[0 to 50 / **30** / 1 deg]
046	H-Limit:Pr Roll:Feed Coated 3
	[0 to 50 / **30** / 1 deg]
047	L-Limit:Pr Roll:Feed Coated 4
	[0 to 50 / **30** / 1 deg]
048	H-Limit:Pr Roll:Feed Coated 4
	[0 to 50 / **30** / 1 deg]
049	L-Limit:Pr Roll:Feed Coated 5
	[0 to 50 / **30** / 1 deg]
050	H-Limit:Pr Roll:Feed Coated 5
	[0 to 50 / **30** / 1 deg]
051	L-Limit:Pr Roll:Feed Coated 6
	[0 to 50 / **30** / 1 deg]
052	H-Limit:Pr Roll:Feed Coated 6
	[0 to 50 / **30** / 1 deg]
053	L-Limit:Pr Roll:Feed Coated 7
	[0 to 50 / **30** / 1 deg]
054	H-Limit:Pr Roll:Feed Coated 7
	[0 to 50 / **30** / 1 deg]

System SP1-xxx: 3

1802*	Resist Speed **DFU**
	Selects the line speed of the registration unit.
001	Plain:Weight 1
	[-2 to 4 / **1** / 1]
002	Plain:Weight 2
	[-2 to 4 / **1** / 1]
003	Plain:Weight 3
	[-2 to 4 / **1** / 1]
004	Plain:Weight 4
	[-2 to 4 / **1** / 1]
005	Plain:Weight 5
	[-2 to 4 / **1** / 1]
006	Plain:Weight 6
	[-2 to 4 / **1** / 1]
007	Plain:Weight 7
	[-2 to 4 / **1** / 1]
012	Matte:Weight 2
	[-2 to 4 / **1** / 1]
013	Matte:Weight 3
	[-2 to 4 / **1** / 1]
014	Matte:Weight 4
	[-2 to 4 / **1** / 1]
015	Matte:Weight 5
	[-2 to 4 / **1** / 1]

016	Matte:Weight 6
	[-2 to 4 / **1** / 1]
017	Matte:Weight 7
	[-2 to 4 / **1** / 1]
022	Glossy:Weight 2
	[-2 to 4 / **1** / 1]
023	Glossy:Weight 3
	[-2 to 4 / **1** / 1]
024	Glossy:Weight 4
	[-2 to 4 / **1** / 1]
025	Glossy:Weight 5
	[-2 to 4 / **1** / 1]
026	Glossy:Weight 6
	[-2 to 4 / **1** / 1]
027	Glossy:Weight 7
	[-2 to 4 / **1** / 1]
075	Envelope:Weight 5
	[-2 to 4 / **1** / 1]
076	Envelope:Weight 6
	[-2 to 4 / **1** / 1]
077	Envelope:Weight 7
	[-2 to 4 / **1** / 1]

1805*	Motor Rotational Setting

001	Exit Motor
	Adjusts the rotation speed of the exit motor. [1000 to 3000 / **1592.9** / 0.1 rpm]
002	Exit Motor:Slow Down1
	Adjusts the rotation speed of the exit motor. [600 to 3000 / **1238.9** / 0.1 rpm]

1806*	Rotation Speed **DFU**
001	Feed Motor 1
	Adjusts the rotation speed of the drive motor right in the buffer pass unit (M379). [1000 to 2500 / **1232.5** / 0.1 rpm]
002	Feed Motor 2
	Adjusts the rotation speed of the drive motor left in the buffer pass unit (M379). [1000 to 2500 / **1232.5** / 0.1 rpm]

1807*	Flip Setting
001	Flip Point
	Selects the activating timing (length between the edge of the exit junction gate and feeding paper) of the exit junction gate. [0 to 5 / **3** / 1] 0: 5 mm, 1: 6.5 mm, 2: 7.5 mm, **3: 8.5 mm**, 4: 9.5 mm, 5: 10.5 mm

1808*	Tab Bleeding
001	Bleeding Position
	[0 or 1 / **0** / -] 0: TAB Shift Mode, 1: Full TAB Printing Mode

1901*	Air Separator Setting
	Selects the air blowing method for the air separator option. 0: No air blowing, 1: Normal air blowing

101	Plain:Weight 1
	[0 to 1 / **1** / 1]
102	Plain:Weight 2
	[0 to 1 / **1** / 1]
103	Plain:Weight 3
	[0 to 1 / **1** / 1]
104	Plain:Weight 4
	[0 to 1 / **0** / 1]
105	Plain:Weight 5
	[0 to 1 / **0** / 1]
106	Plain:Weight 6
	[0 to 1 / **0** / 1]
107	Plain:Weight 7
	[0 to 1 / **0** / 1]
109	Matte:Weight 2
	[0 to 1/ **1** / 1]
110	Matte:Weight 3
	[0 to 1 / **1** / 1]
111	Matte:Weight 4
	[0 to 1 / **1** / 1]
112	Matte:Weight 5
	[0 to 1 / **0** / 1]
113	Matte:Weight 6
	[0 to 1 / **0** / 1]
114	Matte:Weight 7
	[0 to 1 / **0** / 1]

116	Glossy:Weight 2
	[0 to 1 / **1** / 1]
117	Glossy:Weight 3
	[0 to 1 / **1** / 1]
118	Glossy:Weight 4
	[0 to 1 / **1** / 1]
119	Glossy:Weight 5
	[0 to 1 / **0** / 1]
120	Glossy:Weight 6
	[0 to 1 / **0** / 1]
121	Glossy:Weight 7
	[0 to 1 / **0** / 1]
122	Envelope:Weight 5
	[0 to 1 / **0** / 1]
123	Envelope:Weight 6
	[0 to 1/ **0** / 1]
124	Envelope:Weight 7
	[0 to 1 / **0** / 1]
201	Air Separator:ON/OFF
	[0 or 1 / **0** / -]
202	Air Blow Starting Time:normal speed
	Specifies the air blowing timing. [0 to 342 / **25** / 1 msec]
203	Air Blow Starting Time:slowdown
	Specifies the air blowing timing. [0 to 440 / **25** / 1 msec]

204	Air Blow Duration Time:normal speed
	Specifies the air blowing time. [0 to 322 / **50** / 1 msec]
205	Air Blow Duration Time:slowdown
	Specifies the air blowing time. [0 to 414 / **50** / 1 msec]
206	Air Release Time
	[0 to 10 / **5** / 1 msec]
207	Air Pressure Time
	Specifies the air release time. [0 to 10 / **5** / 1 msec]
208	Air Release Waiting Time
	Specifies the air release time. [0 to 10 / **30** / 1 msec]

1902*	Cleaning Web Setting
001	Web Consumption
	Displays the web consumption rate. [0 to 107 / **0** / 1%]
002	Web Motor Interval
	[3 to 130 / **11.3** / 0.1 sec]
003	Web Motor Rotation Time
	[0.3 to 3.5 / **5.0** / 0.1 sec]
004	Web Near End Setting
	[0 to 100 / **81** / 1 %]
006	Web Near End/End Clear
	Clears the near end and end counter.

007	Correction Coeff alpha
	[0 to 1 / **1** / 0.01]
008	Web Motor Rotation
	[0 to 30 / **6** / 1]
009	Thermopile Value
	[0 to 200 / **200** / 1°C]
011	Web Motor Rotation:1st Power On
	[0 to 30 / **2** / 1]
012	Duplex Correction
	[0.01 to 1 / **0.77** / 0.01]

1903*	Web Drive Time
001	Web: Total Page Counter
	[0 to 999,999,999 / **-** / 1 sec]
002	Web: Total Motor Rotation Time
	[0 to 25.5 / **0** / 0.1 sec]

1904*	Web Feed Interval
101	Plain:Weight 1
	[0.01 to 3 / **1** / 0.01]
102	Plain:Weight 2
	[0.01 to 3 / **1** / 0.01]
103	Plain:Weight 3
	[0.01 to 3 / **1** / 0.01]
104	Plain:Weight 4
	[0.01 to 3 / **1** / 0.01]

105	Plain:Weight 5
	[0.01 to 3 / **1** / 0.01]
106	Plain:Weight 6
	[0.01 to 3 / **1** / 0.01]
107	Plain:Weight 7
	[0.01 to 3 / **1** / 0.01]
109	Matte:Weight 2
	[0.01 to 3 / **1** / 0.01]
110	Matte:Weight 3
	[0.01 to 3 / **1** / 0.01]
111	Matte:Weight 4
	[0.01 to 3 / **1** / 0.01]
112	Matte:Weight 5
	[0.01 to 3 / **1** / 0.01]
113	Matte:Weight 6
	[0.01 to 3 / **1** / 0.01]
114	Matte:Weight 7
	[0.01 to 3 / **1** / 0.01]
116	Glossy:Weight 2
	[0.01 to 3 / **1** / 0.01]
117	Glossy:Weight 3
	[0.01 to 3 / **1** / 0.01]
118	Glossy:Weight 4
	[0.01 to 3 / **1** / 0.01]
119	Glossy:Weight 5
	[0.01 to 3 / **1** / 0.01]

120	Glossy:Weight 6
	[0.01 to 3 / **1** / 0.01]
121	Glossy:Weight 7
	[0.01 to 3 / **1** / 0.01]
122	Envelope:Weight 5
	[0.01 to 3 / **1** / 0.01]
123	Envelope:Weight 6
	[0.01 to 3 / **1** / 0.01]
124	Envelope:Weight 7
	[0.01 to 3 / **1** / 0.01]

System SP1-xxx: 4

1905*	Nip Width Setting
	Selects the position of the pressure roller. 1 < 2 < 3 < 4 (Strongest pressure)
101	Plain:Weight 1
	[1 to 4 / **4** / 1]
102	Plain:Weight 2
	[1 to 4 / **4** / 1]
103	Plain:Weight 3
	[1 to 4 / **4** / 1]
104	Plain:Weight 4
	[1 to 4 / **4** / 1]
105	Plain:Weight 5
	[1 to 4 / **4** / 1]
106	Plain:Weight 6
	[1 to 4 / **4** / 1]
107	Plain:Weight 7
	[1 to 4 / **4** / 1]
109	Matte:Weight 2
	[1 to 4 / **4** / 1]
110	Matte:Weight 3
	[1 to 4 / **4** / 1]
111	Matte:Weight 4
	[1 to 4 / **4** / 1]

112	Matte:Weight 5
	[1 to 4 / **4** / 1]
113	Matte:Weight 6
	[1 to 4 / **4** / 1]
114	Matte:Weight 7
	[1 to 4 / **4** / 1]
116	Glossy:Weight 2
	[1 to 4 / **4** / 1]
117	Glossy:Weight 3
	[1 to 4 / **4** / 1]
118	Glossy:Weight 4
	[1 to 4 / **4** / 1]
119	Glossy:Weight 5
	[1 to 4 / **4** / 1]
120	Glossy:Weight 6
	[1 to 4 / **4** / 1]
121	Glossy:Weight 7
	[1 to 4 / **4** / 1]
122	Envelope:Weight 5
	[1 to 4 / **4** / 1]
123	Envelope:Weight 6
	[1 to 4 / **4** / 1]
124	Envelope:Weight 7
	[1 to 4 / **4** / 1]

201	Pressure Position1
	Specifies the rotation time of the pressure roller lift motor for the position 1. [0 to 10000 / **638** / 1 msec.]
202	Pressure Position2
	Specifies the rotation time of the pressure roller lift motor for the position 2. [0 to 10000 / **1145** / 1 msec.]
203	Pressure Position3
	Specifies the rotation time of the pressure roller lift motor for the position 3. [0 to 10000 / **1651** / 1 msec.]
204	Pressure Position4
	Specifies the rotation time of the pressure roller lift motor for the position 4. [0 to 10000 / **2802** / 1 msec.]

1906*	De-curler Setting
002	Default Position:Lower Path
	[–3 to 3 / **0** / 0.1 mm]
003	Default Position:Upper Path
	[–3 to 3 / **0** / 0.1 mm]
004	Line Speed Adjust:Default Pos
	[–2.5 to 12.5 / **0** / 0.5%]
005	Line Speed Adjust:Pos.1
	[–2.5 to 12.5 / **2** / 0.5%]
006	Line Speed Adjust:Pos.2
	[–2.5 to 12.5 / **3** / 0.5%]
007	Line Speed Adj:Slow Down1:Def
	Specifies the line speed rate of the decurl unit for the normal curl mode in the slowdown mode. [–2.5 to 12.5 / **0** / 0.5%]

008	Line Speed Adj:Slow Down1:Pos1
	Specifies the line speed rate of the decurl unit for the weak curl mode in the slowdown mode. [–2.5 to 12.5 / **2** / 0.5%]
009	Line Speed Adj:Slow Down1:Pos2
	Specifies the line speed rate of the decurl unit for the strong curl mode in the slowdown mode. [–2.5 to 12.5 / **3** / 0.5%]

1907*	Fusin Motor Rotation
001	Fusing Motor Rotation Control
	[678.8 to 1584 / **980** / 0.1 rpm]

1908*	Erase Margin Adj Leading Edge:Air
	These SPs are designed for implementing paper separation of various paper types at the fusing exit.
001	Plain:Weight 1
	[0 to 6 / **0** / 0.1 mm]
002	Plain:Weight 2
	[0 to 6 / **0** / 0.1 mm]
003	Plain:Weight 3
	[0 to 6 / **0** / 0.1 mm]
004	Plain:Weight 4
	[0 to 6 / **0** / 0.1 mm]
005	Plain:Weight 5
	[0 to 6 / **0** / 0.1 mm]
006	Plain:Weight 6
	[0 to 6 / **0** / 0.1 mm]

007	Plain:Weight 7
	[0 to 6 / **0** / 0.1 mm]
008	Matte:Weight 2
	[0 to 6 / **0** / 0.1 mm]
009	Matte:Weight 3
	[0 to 6 / **0** / 0.1 mm]
010	Matte:Weight 4
	[0 to 6 / **0** / 0.1 mm]
011	Matte:Weight 5
	[0 to 6 / **0** / 0.1 mm]
012	Matte:Weight 6
	[0 to 6 / **0** / 0.1 mm]
013	Matte:Weight 7
	[0 to 6 / **0** / 0.1 mm]
014	Glossy:Weight 2
	[0 to 6 / **0** / 0.1 mm]
015	Glossy:Weight 3
	[0 to 6 / **0** / 0.1 mm]
016	Glossy:Weight 4
	[0 to 6 / **0** / 0.1 mm]
017	Glossy:Weight 5
	[0 to 6 / **0** / 0.1 mm]
018	Glossy:Weight 6
	[0 to 6 / **0** / 0.1 mm]
019	Glossy:Weight 7
	[0 to 6 / **0** / 0.1 mm]

020	Envelope:Weight 5
	[0 to 6 / **0** / 0.1 mm]
021	Envelope:Weight 6
	[0 to 6 / **0** / 0.1 mm]
022	Envelope:Weight 7
	[0 to 6 / **0** / 0.1 mm]

1909*	Fusing Mtr Rotation Correct
	These SPs correct the rotation of the fusing motor for each paper type.
101	Plain:Weight 1
	[-10 to 10 / **0** / 0.1% /step]
102	Plain:Weight 2
	[-10 to 10 / **0** / 0.1% /step]
103	Plain:Weight 3
	[-10 to 10 / **0** / 0.1% /step]
104	Plain:Weight 4
	[-10 to 10 / **0** / 0.1% /step]
105	Plain:Weight 5
	[-10 to 10 / **0** / 0.1% /step]
106	Plain:Weight 6
	[-10 to 10 / **0** / 0.1% /step]
107	Plain:Weight 7
	[-10 to 10 / **0** / 0.1% /step]
109	Matte:Weight 2
	[-10 to 10 / **0** / 0.1% /step]

110	Matte:Weight 3
	[-10 to 10 / **0** / 0.1% /step]
111	Matte:Weight 4
	[-10 to 10 / **0** / 0.1% /step]
112	Matte:Weight 5
	[-10 to 10 / **0** / 0.1% /step]
113	Matte:Weight 6
	[-10 to 10 / **0** / 0.1% /step]
114	Matte:Weight 7
	[-10 to 10 / **0** / 0.1% /step]
116	Glossy:Weight 2
	[-10 to 10 / **0** / 0.1% /step]
117	Glossy:Weight 3
	[-10 to 10 / **0** / 0.1% /step]
118	Glossy:Weight 4
	[-10 to 10 / **0** / 0.1% /step]
119	Glossy:Weight 5
	[-10 to 10 / **0** / 0.1% /step]
120	Glossy:Weight 6
	[-10 to 10 / **0** / 0.1% /step]
121	Glossy:Weight 7
	[-10 to 10 / **0** / 0.1% /step]
122	Envelope:Weight 5
	[-10 to 10 / **0** / 0.1% /step]
123	Envelope:Weight 6
	[-10 to 10 / **0** / 0.1% /step]

124	Envelope:Weight 7
	[-10 to 10 / **0** / 0.1% /step]

System SP1-xxx: 5

1911*	Dbl-Feed Comp Std Value
001	Last
	[0 to 5 / **0** / 0.01V]
002	Last2
	[0 to 5 / **0** / 0.01V]
003	Last3
	[0 to 5 / **0** / 0.01V]
004	Last4
	[0 to 5 / **0** / 0.01V]
005	Last5
	[0 to 5 / **0** / 0.01V]

1912	CIS LED Power Adjustment
001	Execute
	Executes the LED power adjustment of the CIS.

1913*	CIS LED Adj. Result Displ
001	PWM Duty
	[0 x 00 to 0 x AA / **0** / 1]

1914*	CIS P Pass Pixel Display
001	Main U Tray:LEdge1
	[0 to 1216 / **0** / 1 dot]
002	Main U Tray:LEdge2
	[0 to 1216 / **0** / 1 dot]

003	Main U Tray:LEdge3
	[0 to 1216 / **0** / 1 dot]
004	Main U Tray:LShift1
	[0 to 1216 / **0** / 1 dot]
005	Main U Tray:LShift2
	[0 to 1216 / **0** / 1 dot]
006	Main U Tray:LShift3
	[0 to 1216 / **0** / 1 dot]
007	Main U Tray:TShift1
	[0 to 1216 / **0** / 1 dot]
008	Main U Tray:TShift2
	[0 to 1216 / **0** / 1 dot]
009	Main U Tray:TShift3
	[0 to 1216 / **0** / 1 dot]
010	Main L Tray:LEdge1
	[0 to 1216 / **0** / 1 dot]
011	Main L Tray:LEdge2
	[0 to 1216 / **0** / 1 dot]
012	Main L Tray:LEdge3
	[0 to 1216 / **0** / 1 dot]
013	Main L Tray:LShift1
	[0 to 1216 / **0** / 1 dot]
014	Main L Tray:LShift2
	[0 to 1216 / **0** / 1 dot]
015	Main L Tray:LShift3
	[0 to 1216 / **0** / 1 dot]

016	Main L Tray:TShift1
	[0 to 1216 / **0** / 1 dot]
017	Main L Tray:TShift2
	[0 to 1216 / **0** / 1 dot]
018	Main L Tray:TShift3
	[0 to 1216 / **0** / 1 dot]
019	A4LCT U Tray:LEdge1 **(M077 only)**
	[0 to 1216 / **0** / 1 dot]
020	A4LCT U Tray:LEdge2 **(M077 only)**
	[0 to 1216 / **0** / 1 dot]
021	A4LCT U Tray:LEdge3 **(M077 only)**
	[0 to 1216 / **0** / 1 dot]
022	A4LCT U Tray:LShift1 **(M077 only)**
	[0 to 1216 / **0** / 1 dot]
023	A4LCT U Tray:LShift2 **(M077 only)**
	[0 to 1216 / **0** / 1 dot]
024	A4LCT U Tray:LShift3 **(M077 only)**
	[0 to 1216 / **0** / 1 dot]
025	A4LCT U Tray:TShift1 **(M077 only)**
	[0 to 1216 / **0** / 1 dot]
026	A4LCT U Tray:TShift2 **(M077 only)**
	[0 to 1216 / **0** / 1 dot]
027	A4LCT U Tray:TShift3 **(M077 only)**
	[0 to 1216 / **0** / 1 dot]
028	A4LCT M Tray:LEdge1 **(M077 only)**
	[0 to 1216 / **0** / 1 dot]

029	A4LCT M Tray:LEdge2 **(M077 only)**
	[0 to 1216 / **0** / 1 dot]
030	A4LCT M Tray:LEdge3 **(M077 only)**
	[0 to 1216 / **0** / 1 dot]
031	A4LCT M Tray:LShift1 **(M077 only)**
	[0 to 1216 / **0** / 1 dot]
032	A4LCT M Tray:LShift2 **(M077 only)**
	[0 to 1216 / **0** / 1 dot]
033	A4LCT M Tray:LShift3 **(M077 only)**
	[0 to 1216 / **0** / 1 dot]
034	A4LCT M Tray:TShift1 **(M077 only)**
	[0 to 1216 / **0** / 1 dot]
035	A4LCT M Tray:TShift2 **(M077 only)**
	[0 to 1216 / **0** / 1 dot]
036	A4LCT M Tray:TShift3 **(M077 only)**
	[0 to 1216 / **0** / 1 dot]
037	A4LCT L Tray:LEdge1 **(M077 only)**
	[0 to 1216 / **0** / 1 dot]
038	A4LCT L Tray:LEdge2 **(M077 only)**
	[0 to 1216 / **0** / 1 dot]
039	A4LCT L Tray:LEdge3 **(M077 only)**
	[0 to 1216 / **0** / 1 dot]
040	A4LCT L Tray:LShift1 **(M077 only)**
	[0 to 1216 / **0** / 1 dot]
041	A4LCT L Tray:LShift2 **(M077 only)**
	[0 to 1216 / **0** / 1 dot]

042	A4LCT L Tray:LShift3 **(M077 only)**
	[0 to 1216 / **0** / 1 dot]
043	A4LCT L Tray:TShift1 **(M077 only)**
	[0 to 1216 / **0** / 1 dot]
044	A4LCT L Tray:TShift2 **(M077 only)**
	[0 to 1216 / **0** / 1 dot]
045	A4LCT L Tray:TShift3 **(M077 only)**
	[0 to 1216 / **0** / 1 dot]
046	By-Pass Tray:LEdge1
	[0 to 1216 / **0** / 1 dot]
047	By-Pass Tray:LEdge2
	[0 to 1216 / **0** / 1 dot]
048	By-Pass Tray:LEdge3
	[0 to 1216 / **0** / 1 dot]
049	By-Pass Tray:LShift1
	[0 to 1216 / **0** / 1 dot]
050	By-Pass Tray:LShift2
	[0 to 1216 / **0** / 1 dot]
051	By-Pass Tray:LShift3
	[0 to 1216 / **0** / 1 dot]
052	By-Pass Tray:TShift1
	[0 to 1216 / **0** / 1 dot]
053	By-Pass Tray:TShift2
	[0 to 1216 / **0** / 1 dot]
054	By-Pass Tray:TShift3
	[0 to 1216 / **0** / 1 dot]

055	A3LCT1 U Tray:LEdge1
	[0 to 1216 / **0** / 1 dot]
056	A3LCT1 U Tray:LEdge2
	[0 to 1216 / **0** / 1 dot]
057	A3LCT1 U Tray:LEdge3
	[0 to 1216 / **0** / 1 dot]
058	A3LCT1 U Tray:LShift1
	[0 to 1216 / **0** / 1 dot]
059	A3LCT1 U Tray:LShift2
	[0 to 1216 / **0** / 1 dot]
060	A3LCT1 U Tray:LShift3
	[0 to 1216 / **0** / 1 dot]
061	A3LCT1 U Tray:TShift1
	[0 to 1216 / **0** / 1 dot]
062	A3LCT1 U Tray:TShift2
	[0 to 1216 / **0** / 1 dot]
063	A3LCT1 U Tray:TShift3
	[0 to 1216 / **0** / 1 dot]
064	A3LCT1 L Tray:LEdge1
	[0 to 1216 / **0** / 1 dot]
065	A3LCT1 L Tray:LEdge2
	[0 to 1216 / **0** / 1 dot]
066	A3LCT1 L Tray:LEdge3
	[0 to 1216 / **0** / 1 dot]
067	A3LCT1 L Tray:LShift1
	[0 to 1216 / **0** / 1 dot]

068	A3LCT1 L Tray:LShift2
	[0 to 1216 / **0** / 1 dot]
069	A3LCT1 L Tray:LShift3
	[0 to 1216 / **0** / 1 dot]
070	A3LCT1 L Tray:TShift1
	[0 to 1216 / **0** / 1 dot]
071	A3LCT1 L Tray:TShift2
	[0 to 1216 / **0** / 1 dot]
072	A3LCT1 L Tray:TShift3
	[0 to 1216 / **0** / 1 dot]
073	A3LCT2 U Tray:LEdge1
	[0 to 1216 / **0** / 1 dot]
074	A3LCT2 U Tray:LEdge2
	[0 to 1216 / **0** / 1 dot]
075	A3LCT2 U Tray:LEdge3
	[0 to 1216 / **0** / 1 dot]
076	A3LCT2 U Tray:LShift1
	[0 to 1216 / **0** / 1 dot]
077	A3LCT2 U Tray:LShift2
	[0 to 1216 / **0** / 1 dot]
078	A3LCT2 U Tray:LShift3
	[0 to 1216 / **0** / 1 dot]
079	A3LCT2 U Tray:TShift1
	[0 to 1216 / **0** / 1 dot]
080	A3LCT2 U Tray:TShift2
	[0 to 1216 / **0** / 1 dot]

081	A3LCT2 U Tray:TShift3
	[0 to 1216 / **0** / 1 dot]
082	A3LCT2 L Tray:LEdge1
	[0 to 1216 / **0** / 1 dot]
083	A3LCT2 L Tray:LEdge2
	[0 to 1216 / **0** / 1 dot]
084	A3LCT2 L Tray:LEdge3
	[0 to 1216 / **0** / 1 dot]
085	A3LCT2 L Tray:LShift1
	[0 to 1216 / **0** / 1 dot]
086	A3LCT2 L Tray:LShift2
	[0 to 1216 / **0** / 1 dot]
087	A3LCT2 L Tray:LShift3
	[0 to 1216 / **0** / 1 dot]
088	A3LCT2 L Tray:TShift1
	[0 to 1216 / **0** / 1 dot]
089	A3LCT2 L Tray:TShift2
	[0 to 1216 / **0** / 1 dot]
090	A3LCT2 L Tray:TShift3
	[0 to 1216 / **0** / 1 dot]
091	Back:LEdge1
	[0 to 1216 / **0** / 1 dot]
092	Back:LEdge2
	[0 to 1216 / **0** / 1 dot]
093	Back:LEdge3
	[0 to 1216 / **0** / 1 dot]

094	Back:LE_Shift1
	[0 to 1216 / **0** / 1 dot]
095	Back:LE_Shift2
	[0 to 1216 / **0** / 1 dot]
096	Back:LE_Shift3
	[0 to 1216 / **0** / 1 dot]
097	Back:TE_Shift1
	[0 to 1216 / **0** / 1 dot]
098	Back:TE_Shift2
	[0 to 1216 / **0** / 1 dot]
099	Back:TE_Shift3
	[0 to 1216 / **0** / 1 dot]

1915*	CIS P Pass Pixel: Stndrd Displ
001	Tray 1: 1
	[0 to 1216 / **0** / 1 dot]
002	Tray 1: 2
	[0 to 1216 / **0** / 1 dot]
003	Tray 1: 3
	[0 to 1216 / **0** / 1 dot]
004	Tray 2: 1
	[0 to 1216 / **0** / 1 dot]
005	Tray 2: 2
	[0 to 1216 / **0** / 1 dot]
006	Tray 2: 3
	[0 to 1216 / **0** / 1 dot]

007	A4 LCT: Upper Tray: 1 **(M077 only)**
	[0 to 1216 / **0** / 1 dot]
008	A4 LCT: Upper Tray: 2 **(M077 only)**
	[0 to 1216 / **0** / 1 dot]
009	A4 LCT: Upper Tray: 3 **(M077 only)**
	[0 to 1216 / **0** / 1 dot]
010	A4 LCT: Middle Tray: 1 **(M077 only)**
	[0 to 1216 / **0** / 1 dot]
011	A4 LCT: Middle Tray: 2 **(M077 only)**
	[0 to 1216 / **0** / 1 dot]
012	A4 LCT: Middle Tray: 3 **(M077 only)**
	[0 to 1216 / **0** / 1 dot]
013	A4 LCT: Lower Tray: 1 **(M077 only)**
	[0 to 1216 / **0** / 1 dot]
014	A4 LCT: Lower Tray: 2 **(M077 only)**
	[0 to 1216 / **0** / 1 dot]
015	A4 LCT: Lower Tray: 3 **(M077 only)**
	[0 to 1216 / **0** / 1 dot]
016	By-pass Tray: 1
	[0 to 1216 / **0** / 1 dot]
017	By-pass Tray: 2
	[0 to 1216 / **0** / 1 dot]
018	By-pass Tray: 3
	[0 to 1216 / **0** / 1 dot]
019	A3 LCT1: Upper Tray: 1
	[0 to 1216 / **0** / 1 dot]

020	A3 LCT1: Upper Tray: 2
	[0 to 1216 / **0** / 1 dot]
021	A3 LCT1: Upper Tray: 3
	[0 to 1216 / **0** / 1 dot]
022	A3 LCT1: Lower Tray: 1
	[0 to 1216 / **0** / 1 dot]
023	A3 LCT1: Lower Tray: 2
	[0 to 1216 / **0** / 1 dot]
024	A3 LCT1: Lower Tray: 3
	[0 to 1216 / **0** / 1 dot]
025	A3 LCT2: Upper Tray: 1
	[0 to 1216 / **0** / 1 dot]
026	A3 LCT2: Upper Tray: 2
	[0 to 1216 / **0** / 1 dot]
027	A3 LCT2: Upper Tray: 3
	[0 to 1216 / **0** / 1 dot]
028	A3 LCT2: Lower Tray: 1
	[0 to 1216 / **0** / 1 dot]
029	A3 LCT2: Lower Tray: 2
	[0 to 1216 / **0** / 1 dot]
030	A3 LCT2: Lower Tray: 3
	[0 to 1216 / **0** / 1 dot]
031	Back 1
	[0 to 1216 / **0** / 1 dot]
032	Back 2
	[0 to 1216 / **0** / 1 dot]

033	Back 3
	[0 to 1216 / **0** / 1 dot]

1916*	CIS LED Power Magnification
001	Variable Magnification
	[1 to 5 / **1.61** / 0.01]

1917*	Skew Detect
001	Thresh Adj
	[0.1 to 10 / **3** / 0.1 mm]

1918*	Double-feed Detect
001	Thresh Adj:M1
	[0 to 100 / **30** / 1%]
002	Thresh Adj:M2
	[0 to 100 / **30** / 1%]
003	Thresh Adj:M3
	[0 to 100 / **5** / 1%]

1920*	Wide LCT Fan Duty Adj
001	A3LCT:UTray Tray3
	[1 to 100 / **70** / 1%]
002	A3LCT: Tray4
	[1 to 100 / **70** / 1%]
003	A3LCT: Tray5
	[1 to 100 / **70** / 1%]

004	A3LCT: Tray6
	[1 to 100 / **70** / 1%]

1921*	Wide LCT Fan Start Time Setting
001	A3LCT:UTray Tray3
	[1 to 10 / **3** / 1 sec]
002	A3LCT:UTray Tray4
	[1 to 10 / **3** / 1 sec]
003	A3LCT:UTray Tray5
	[1 to 10 / **3** / 1 sec]
004	A3LCT:UTray Tray6
	[1 to 10 / **3** / 1 sec]

1922*	Wide LCT Fan ON/OFF Setting
001	A3LCT:UTray Tray3
	[0 to 2 / **0** / 1] 0: Auto, 1: ON, 2: OFF
002	A3LCT:UTray Tray4
	[0 to 2 / **0** / 1] 0: Auto, 1: ON, 2: OFF
003	A3LCT:UTray Tray5
	[0 to 2 / **0** / 1] 0: Auto, 1: ON, 2: OFF
004	A3LCT:UTray Tray6
	[0 to 2 / **0** / 1] 0: Auto, 1: ON, 2: OFF

1923*	WideLCT Pickup Assist ON/OFF

001	A3LCT:UTray Tray3
	[0 to 2 / **0** / 1] 0: Auto, 1: ON, 2: OFF
002	A3LCT:UTray Tray4
	[0 to 2 / **0** / 1] 0: Auto, 1: ON, 2: OFF
003	A3LCT:UTray Tray5
	[0 to 2 / **0** / 1] 0: Auto, 1: ON, 2: OFF
004	A3LCT:UTray Tray6
	[0 to 2 / **0** / 1] 0: Auto, 1: ON, 2: OFF

1924*	LCT Paper Select
	Selects the coated paper setting or uncoated paper setting for each paper type.
001	Special 1
	For special paper 1 [0 or 1 / **1** / -] 0: Uncoated paper setting 1: Coated paper setting
002	Special 2
	For special paper 2 [0 or 1 / **1** / -] 0: Uncoated paper setting 1: Coated paper setting

003	Special 3
	For special paper 3 [0 or 1 / **0** / -] 0: Uncoated paper setting 1: Coated paper setting
004	Special 4
	For special paper 4 [0 or 1 / **0** / -] 0: Uncoated paper setting 1: Coated paper setting
005	Special 5
	For special paper 5 [0 or 1 / **0** / -] 0: Uncoated paper setting 1: Coated paper setting
006	Special 6
	For special paper 6 [0 or 1 / **0** / -] 0: Uncoated paper setting 1: Coated paper setting

1940*	Stand-by Setting
001	Fusing Fan 5-6
	[0 to 1270 / **0** / 1min]
002	Fusing Fan 1-3
	[0 to 1270 / **0** / 1min]
003	Ozone Fan:YMCK
	[0 to 1270 / **56** / 1min]

004	Development Fan:YMCK
	[0 to 1270 / **56** / 1min]
005	Black PCDU Fan
	[0 to 1270 / **0** / 1min]
006	Fusing Fan 4
	[0 to 1270 / **0** / 1min]
007	Fusing Exhaust Fan 1-3
	[0 to 1270 / **0** / 1min]
008	Cooling Unit Fan
	[0 to 60 / **1** / 1min]

1941*	Stand-by:Execute Setting
001	Fusing Fan 5-6
	[0 or 1 / **0** / 1] 0: OFF, 1: ON
002	Fusing Fan 1-3
	[0 or 1 / **0** / 1] 0: OFF, 1: ON
003	Ozone Fan:YMCK
	[0 or 1 / **1** / 1] 0: OFF, 1: ON
004	Development Fan:YMCK
	[0 or 1 / **1** / 1] 0: OFF, 1: ON
005	Black PCDU Fan
	[0 or 1 / **0** / 1] 0: OFF, 1: ON

006	Fusing Fan 5-6:Half Speed
	[0 or 1 / **0** / 1] 0: OFF, 1: ON
007	Fusing Exhaust Fan 1-3:Half Speed
	[0 or 1 / **0** / 1] 0: OFF, 1: ON
008	Fusing Fan 4
	[0 or 1 / **0** / 1] 0: OFF, 1: ON
009	Fusing Exhaust Fan 1-3
	[0 or 1 / **0** / 1] 0: OFF, 1: ON
010	Fusing Fan 4:Half Speed
	[0 or 1 / **0** / 1] 0: OFF, 1: ON
011	Fusing Exhaust Fan 1-3:Half Speed
	[0 or 1 / **0** / 1] 0: OFF, 1: ON

1942*	Fan drive:Execute Setting
001	Cooling Unit Fan
	[0 to 2 / **1** / 1] 0: FAN OFF, 1: Paper Weight, FAN ON

1950*	Control Selection
001	Line Speed Fine Adjustment
	Turns on or off the line speed adjustment in the sub scan direction. [0 or 1 / **0** / 1] 0: OFF, 1: ON

002	Auto Paper Feed Out Mode
	Turns on or off the automatic purge mode at the paper jam removal. [0 or 1 / **0** / 1] 0: OFF, 1: ON

1971*	Erase Margin Adj Trailing Edge
101	Plain:Weight 1
	Specifies the erase margin for the paper trailing edge. [0 to 6 / **1.5** / 0.1 mm]
102	Plain:Weight 2
	Specifies the erase margin for the paper trailing edge. [0 to 6 / **1.5** / 0.1 mm]
103	Plain:Weight 3
	Specifies the erase margin for the paper trailing edge. [0 to 6 / **1.5** / 0.1 mm]
104	Plain:Weight 4
	Specifies the erase margin for the paper trailing edge. [0 to 6 / **1.5** / 0.1 mm]
105	Plain:Weight 5
	Specifies the erase margin for the paper trailing edge. [0 to 6 / **0** / 0.1 mm]
106	Plain:Weight 6
	Specifies the erase margin for the paper trailing edge. [0 to 6 / **0** / 0.1 mm]
107	Plain:Weight 7
	Specifies the erase margin for the paper trailing edge. [0 to 6 / **0** / 0.1 mm]

108	Glossy:Weight 2
	Specifies the erase margin for the paper trailing edge. [0 to 6 / **1.5** / 0.1 mm]
109	Glossy:Weight 3
	Specifies the erase margin for the paper trailing edge. [0 to 6 / **1.5** / 0.1 mm]
110	Glossy:Weight 4
	Specifies the erase margin for the paper trailing edge. [0 to 6 / **1.5** / 0.1 mm]
111	Glossy:Weight 5
	Specifies the erase margin for the paper trailing edge. [0 to 6 / **0** / 0.1 mm]
112	Glossy:Weight 6
	Specifies the erase margin for the paper trailing edge. [0 to 6 / **0** / 0.1 mm]
113	Glossy:Weight 7
	Specifies the erase margin for the paper trailing edge. [0 to 6 / **0** / 0.1 mm]
114	Matte:Weight 2
	Specifies the erase margin for the paper trailing edge. [0 to 6 / **1.5** / 0.1 mm]
115	Matte:Weight 3
	Specifies the erase margin for the paper trailing edge. [0 to 6 / **1.5** / 0.1 mm]
116	Matte:Weight 4
	Specifies the erase margin for the paper trailing edge. [0 to 6 / **1.5** / 0.1 mm]

117	Matte:Weight 5
	Specifies the erase margin for the paper trailing edge. [0 to 6 / **0** / 0.1 mm]
118	Matte:Weight 6
	Specifies the erase margin for the paper trailing edge. [0 to 6 / **0** / 0.1 mm]
119	Matte:Weight 7
	Specifies the erase margin for the paper trailing edge. [0 to 6 / **0** / 0.1 mm]
120	Envelope:Weight 5
	Specifies the erase margin for the paper trailing edge. [0 to 6 / **0** / 0.1 mm]
121	Envelope:Weight 6
	Specifies the erase margin for the paper trailing edge. [0 to 6 / **0** / 0.1 mm]
122	Envelope:Weight 7
	Specifies the erase margin for the paper trailing edge. [0 to 6 / **0** / 0.1 mm]

1978*	LCT Tray Fan ON/OFF 2
	Turns on or off the LCT tray fan for each paper.
001	Plain:Weight 1
	[0 or 1 / **1** / -] 0: Off, 1: On
002	Plain:Weight 2
	[0 or 1 / **1** / -] 0: Off, 1: On
003	Plain:Weight 3
	[0 or 1 / **1** / -] 0: Off, 1: On

004	Plain:Weight 4
	[0 or 1 / **1** / -] 0: Off, 1: On
005	Plain:Weight 5
	[0 or 1 / **1** / -] 0: Off, 1: On
006	Plain:Weight 6
	[0 or 1 / **1** / -] 0: Off, 1: On
007	Plain:Weight 7
	[0 or 1 / **1** / -] 0: Off, 1: On
009	Glossy:Weight 2
	[0 or 1 / **1** / -] 0: Off, 1: On
010	Glossy:Weight 3
	[0 or 1 / **1** / -] 0: Off, 1: On
011	Glossy:Weight 4
	[0 or 1 / **1** / -] 0: Off, 1: On
012	Glossy:Weight 5
	[0 or 1 / **1** / -] 0: Off, 1: On
013	Glossy:Weight 6
	[0 or 1 / **1** / -] 0: Off, 1: On
014	Glossy:Weight 7
	[0 or 1 / **1** / -] 0: Off, 1: On
016	Matte:Weight 2
	[0 or 1 / **1** / -] 0: Off, 1: On
017	Matte:Weight 3
	[0 or 1 / **1** / -] 0: Off, 1: On
018	Matte:Weight 4
	[0 or 1 / **1** / -] 0: Off, 1: On

019	Matte:Weight 5
	[0 or 1 / **1** / -] 0: Off, 1: On
020	Matte:Weight 6
	[0 or 1 / **1** / -] 0: Off, 1: On
021	Matte:Weight 7
	[0 or 1 / **1** / -] 0: Off, 1: On
022	Label:Weight 1
	[0 or 1 / **1** / -] 0: Off, 1: On
023	Label:Weight 2
	[0 or 1 / **1** / -] 0: Off, 1: On
024	Label:Weight 3
	[0 or 1 / **1** / -] 0: Off, 1: On
025	Label:Weight 4
	[0 or 1 / **1** / -] 0: Off, 1: On
026	Label:Weight 5
	[0 or 1 / **1** / -] 0: Off, 1: On
027	Label:Weight 6
	[0 or 1 / **1** / -] 0: Off, 1: On
028	Label:Weight 7
	[0 or 1 / **1** / -] 0: Off, 1: On
033	Envelope:Weight 5
	[0 or 1 / **1** / -] 0: Off, 1: On
034	Envelope:Weight 6
	[0 or 1 / **1** / -] 0: Off, 1: On
035	Envelope:Weight 7
	[0 or 1 / **1** / -] 0: Off, 1: On

1979*	LCT Tray Fan ON/OFF 2
	Turns on or off the pickup roller assist for each paper.
001	Plain:Weight 1
	[0 or 1 / **0** / -] 0: Off, 1: On
002	Plain:Weight 2
	[0 or 1 / **0** / -] 0: Off, 1: On
003	Plain:Weight 3
	[0 or 1 / **0** / -] 0: Off, 1: On
004	Plain:Weight 4
	[0 or 1 / **0** / -] 0: Off, 1: On
005	Plain:Weight 5
	[0 or 1 / **0** / -] 0: Off, 1: On
006	Plain:Weight 6
	[0 or 1 / **0** / -] 0: Off, 1: On
007	Plain:Weight 7
	[0 or 1 / **0** / -] 0: Off, 1: On
009	Glossy:Weight 2
	[0 or 1 / **1** / -] 0: Off, 1: On
010	Glossy:Weight 3
	[0 or 1 / **1** / -] 0: Off, 1: On
011	Glossy:Weight 4
	[0 or 1 / **1** / -] 0: Off, 1: On
012	Glossy:Weight 5
	[0 or 1 / **1** / -] 0: Off, 1: On
013	Glossy:Weight 6
	[0 or 1 / **1** / -] 0: Off, 1: On

014	Glossy:Weight 7
	[0 or 1 / **1** / -] 0: Off, 1: On
016	Matte:Weight 2
	[0 or 1 / **1** / -] 0: Off, 1: On
017	Matte:Weight 3
	[0 or 1 / **1** / -] 0: Off, 1: On
018	Matte:Weight 4
	[0 or 1 / **1** / -] 0: Off, 1: On
019	Matte:Weight 5
	[0 or 1 / **1** / -] 0: Off, 1: On
020	Matte:Weight 6
	[0 or 1 / **1** / -] 0: Off, 1: On
021	Matte:Weight 7
	[0 or 1 / **1** / -] 0: Off, 1: On
026	Envelope:Weight 5
	[0 or 1 / **0** / -] 0: Off, 1: On
027	Envelope:Weight 6
	[0 or 1 / **0** / -] 0: Off, 1: On
028	Envelope:Weight 7
	[0 or 1 / **0** / -] 0: Off, 1: On

System SP2-xxx: 1

SP2-xxx Drum: 1

2101*	Color Interval Registration Adjustment
001	Main Scan Dot:BK
	[-99 to 99 / **0** / 1 dot]
002	Main Scan Dot:C
	[-99 to 99 / **0** / 1 dot]
003	Main Scan Dot:M
	[-99 to 99 / **0** / 1 dot]
004	Main Scan Dot:Y
	[-99 to 99 / **0** / 1 dot]
005	Main Scan:Bk:Sub-Dot
	[-31 to 31 / **0** / 1 sub-dot]
006	Main Scan:Bk-C:Sub-Dot
	[-31 to 31 / **0** / 1 sub-dot]
007	Main Scan:Bk-Y:Sub-Dot
	[-31 to 31 / **0** / 1 sub-dot]
008	Main Scan:Bk-M:Sub-Dot
	[-31 to 31 / **0** / 1 sub-dot]
013	SubScan Line:BK
	[-20 to 20 / **0** / 1 X8line]
014	SubScan Line:BK
	[-20 to 20 / **0** / 1 X8line]

015	Sub Scan:Bk-C:Line
	[-20 to 20 / **0** / 1 X8line]
016	Sub Scan:Bk-M:Line
	[-20 to 20 / **0** / 1 X8line]
017	Sub Scan:Bk-C:Drum Motor Adj
	[-200 to 200 / **0** / 1 μm]
018	Sub Scan:Bk-M:Drum Motor Adj
	[-200 to 200 / **0** / 1 μm]
019	Sub Scan:Bk-Y:Drum Motor Adj
	[-200 to 200 / **0** / 1 μm]
020	Sensor Offset 1
	[-200 to 200 / **0** / 1 μm]
021	Sensor Offset 2
	[-200 to 200 / **0** / 1 μm]

2102*	LD Channel Interval Adj
030	Bk LD-X1:Main Scan
	[-100 to 100 / **0** / 1 μm]
031	Bk LD-X2:Main Scan
	[-100 to 100 / **0** / 1 μm]
032	Bk LD-X3:Main Scan
	[-100 to 100 / **0** / 1 μm]
033	Bk LD-X4:Main Scan
	[-100 to 100 / **0** / 1 μm]
034	Bk LD-X5:Main Scan
	[-100 to 100 / **0** / 1 μm]

035	Bk LD-X6:Main Scan
	[-100 to 100 / **0** / 1 µm]
036	Bk LD-D:Main Scan
	[-99 to 99 / **0** / 1 µm]
040	C LD-X1:Main Scan
	[-100 to 100 / **0** / 1 µm]
041	C LD-X2:Main Scan
	[-100 to 100 / **0** / 1 µm]
042	C LD-X3:Main Scan
	[-100 to 100 / **0** / 1 µm]
043	C LD-X4:Main Scan
	[-100 to 100 / **0** / 1 µm]
044	C LD-X5:Main Scan
	[-100 to 100 / **0** / 1 µm]
045	C LD-X6:Main Scan
	[-100 to 100 / **0** / 1 µm]
046	C LD-D:Main Scan
	[-99 to 99 / **0** / 1 µm]
050	M LD-X1:Main Scan
	[-100 to 100 / **0** / 1 µm]
051	M LD-X2:Main Scan
	[-100 to 100 / **0** / 1 µm]
052	M LD-X3:Main Scan
	[-100 to 100 / **0** / 1 µm]
053	M LD-X4:Main Scan
	[-100 to 100 / **0** / 1 µm]

054	M LD-X5:Main Scan
	[-100 to 100 / **0** / 1 µm]
055	M LD-X6:Main Scan
	[-100 to 100 / **0** / 1 µm]
056	M LD-D:Main Scan
	[-99 to 99 / **0** / 1 µm]
060	Y LD-X1:Main Scan
	[-100 to 100 / **0** / 1 µm]
061	Y LD-X2:Main Scan
	[-100 to 100 / **0** / 1 µm]
062	Y LD-X3:Main Scan
	[-100 to 100 / **0** / 1 µm]
063	Y LD-X4:Main Scan
	[-100 to 100 / **0** / 1 µm]
064	Y LD-X5:Main Scan
	[-100 to 100 / **0** / 1 µm]
065	Y LD-X6:Main Scan
	[-100 to 100 / **0** / 1 µm]
066	Y LD-D:Main Scan
	[-99 to 99 / **0** / 1 µm]

2103*	Print Magnification Adjustment **DFU**
001	Bk LD0:Main Scan Mag TBL-No
	[-1500 to 1500 / **0** / 1 sub-dot]
002	Bk LD1:Main Scan Mag TBL-No
	[-1500 to 1500 / **0** / 1 sub-dot]

005	M LD0:Main Scan Mag TBL-No
	[-1500 to 1500 / **0** / 1 sub-dot]
006	M LD1:Main Scan Mag TBL-No
	[-1500 to 1500 / **0** / 1 sub-dot]
009	C LD0:Main Scan Mag TBL-No
	[-1500 to 1500 / **0** / 1 sub-dot]
010	C LD1:Main Scan Mag TBL-No
	[-1500 to 1500 / **0** / 1 sub-dot]
013	Y LD0:Main Scan Mag TBL-No
	[-1500 to 1500 / **0** / 1 sub-dot]
014	Y LD1:Main Scan Mag TBL-No
	[-1500 to 1500 / **0** / 1 sub-dot]

2104*	Skew Adjustment Display
001	Bk-C
	[-150 to 150 / **0** / 1 pulse]
002	Bk-M
	[-150 to 150 / **0** / 1 pulse]
003	Bk-Y
	[-150 to 150 / **0** / 1 pulse]
004	Bk
	-150 to 150 / **0** / 1 pulse]

2105*	LD Initial Power Adj
001	Bk LD0
	[32 to 255 / **128** / 1 dec]

002	Bk LD1
	[32 to 255 / **128** / 1 dec]
003	Bk LD2
	[32 to 255 / **128** / 1 dec]
004	Bk LD3
	[32 to 255 / **128** / 1 dec]
005	Bk LD4
	[32 to 255 / **128** / 1 dec]
006	Bk LD5
	[32 to 255 / **128** / 1 dec]
007	Bk LD6
	[32 to 255 / **128** / 1 dec]
008	Bk LD7
	[32 to 255 / **128** / 1 dec]
009	C LD0
	[32 to 255 / **128** / 1 dec]
010	C LD1
	[32 to 255 / **128** / 1 dec]
011	C LD2
	[32 to 255 / **128** / 1 dec]
012	C LD3
	[32 to 255 / **128** / 1 dec]
013	C LD4
	[32 to 255 / **128** / 1 dec]
014	C LD5
	[32 to 255 / **128** / 1 dec]

015	C LD6
	[32 to 255 / **128** / 1 dec]
016	C LD7
	[32 to 255 / **128** / 1 dec]
017	M LD0
	[32 to 255 / **128** / 1 dec]
018	M LD1
	[32 to 255 / **128** / 1 dec]
019	M LD2
	[32 to 255 / **128** / 1 dec]
020	M LD3
	[32 to 255 / **128** / 1 dec]
021	M LD4
	[32 to 255 / **128** / 1 dec]
022	M LD5
	[32 to 255 / **128** / 1 dec]
023	M LD6
	[32 to 255 / **128** / 1 dec]
024	M LD7
	[32 to 255 / **128** / 1 dec]
025	Y LD0
	[32 to 255 / **128** / 1 dec]
026	Y LD1
	[32 to 255 / **128** / 1 dec]
027	Y LD2
	[32 to 255 / **128** / 1 dec]

028	Y LD3
	[32 to 255 / **128** / 1 dec]
029	Y LD4
	[32 to 255 / **128** / 1 dec]
030	Y LD5
	[32 to 255 / **128** / 1 dec]
031	Y LD6
	[32 to 255 / **128** / 1 dec]
032	Y LD7
	[32 to 255 / **128** / 1 dec]

2108	Specify Color Stop
	Specifies disabled colors in a test pattern. 0: Printed, 1: Not printed
001	Bk
	[0 or 1 / **0** / -]
002	C
	[0 or 1 / **0** / -]
003	M
	[[0 or 1 / **0** / -]
004	Y
	[0 or 1 / **0** / -]

2109	Write Test Pattern
001	Image Add (Not used)
	[0 or 1 / **0** / 1]

002	Select Pattern	
	[0 to 36 / **0** / 1]	
	0: No Pattern	19: Trim Area
	1: 1-dot Grid Line: ch0	20: 100% Coverage
	2: 1-dot Grid Line: ch1	21: Vertical Cross-stitch
	3: 1-dot Grid Line: ch2	22: Horizontal Cross-stitch
	4: 1-dot Grid Line: ch3	23: Hori. Cross-Stitch 012
	5: 1-dot Grid Line: ch4	24: Hori. Cross-Stitch 670
	6: 1-dot Grid Line: ch5	25: Horizontal Belt
	7: 1-dot Grid Line: ch6	26: Vertical Belt
	8: 1-dot Grid Line: ch7	27: Checkered Flag
	9: 20 mm Grid	28: Stair
	10: Slant Grid Pattern	29: Hori. Grayscale 20mm
	11: 1-dot Horizontal Line	30: Hori. G-scale 20mm-wht Boards
	12: 1-dot Vertical Lint	31: Hori. Grayscale 40mm-1
	13: 2-dot Horizontal Line	32: Hori. Grayscale 40mm-2
	14: 2-dpt Vertical Line	33: LP Ch. Power Adjst 1
	15: 1-dot Independent	34: LP Ch. Power Adjst 2
	16: 2-dot Independent	35: LP Ch. Power Adjst 3
	17: 4-dot Independent	36: LP Ch. Power Adjst 4
	18: Crop Marks	
004	Select Color:KCMY	
	[[0 x 00 to 0 x 0F / **0 x 0F** / 1] Selects color for test pattern from bit3, bit2, bit1 or bit0. Bit3: Bk, Bit2: C, Bit1: M. Bit0: Y	

005	Density:BK
	[0 to 15 / **15** / 1]
006	Density:C
	[0 to 15 / **15** / 1]
007	Density:M
	[0 to 15 / **15** / 1]
008	Density:Y
	[0 to 15 / **15** / 1]
011	Grey Density 1
	[0 to 15 / **1** / 1]
012	Grey Density 2
	[0 to 15 / **2** / 1]
013	Grey Density 3
	[0 to 15 / **3** / 1]
014	Grey Density 4
	[0 to 15 / **4** / 1]
015	Grey Density 5
	[0 to 15 / **5** / 1]
016	Grey Density 6
	[0 to 15 / **6** / 1]
017	Grey Density 7
	[0 to 15 / **7** / 1]
018	Grey Density 8
	[0 to 15 / **8** / 1]
019	Grey Density 9
	[0 to 15 / **9** / 1]

020	Grey Density 10
	[0 to 15 / **10** / 1]
021	Grey Density 11
	[0 to 15 / **11** / 1]
022	Grey Density 12
	[0 to 15 / **12** / 1]
023	Grey Density 13
	[0 to 15 / **13** / 1]
024	Grey Density 14
	[0 to 15 / **14** / 1]
025	Grey Density 15
	[0 to 15 / **15** / 1]

2110	ITB Check
001	F-ID Sensor Detection Time
	Displays the detection times for scratches and dents on the front side of the ITB. [0 x 00 to 0 x 0F / **0** / 1]
002	C-ID Sensor Detection Time
	Displays the detection times for scratches and dents on the center position of the ITB. [0 x 00 to 0 x 0F / **0** / 1]
003	R-ID Sensor Detection Time
	Displays the detection times for scratches and dents on the rear side of the ITB. [0 to 1 / **0** / 1]
004	Execute Executes the ITB condition check.
	[0 x 00 to 0 x 0F / **0** / 1]

005*	Error Thresh Value
	[0 to 3 / **1.9** / 0.1 V]

2111*	Erase Margin Adj
001	Leading Edge
	[0 to 9 / **4** / 0.1 mm]
002	Trailing Edge
	[0 to 9 / **2.5** / 0.1 mm]
003	Front Side
	[0 to 9 / **2.0** / 0.1 mm]
004	Rear Side
	[0 to 9 / **2.0** / 0.1 mm]
005	Leading Edge:No Air
	Specifies the erase margin for the leading edge without the air separation option. [0 to 9 / **5.0** / 0.1 mm]

2113*	Side-to-Side Regist Adj
001	Main U Tray
	[–10 to 10 / **0** / 0.1 mm]
002	Main L Tray
	[–10 to 10 / **0** / 0.1 mm]
004	A4 LCT1 Upper Tray **(M077 only)**
	[–10 to 10 / **0** / 0.1 mm]
005	A4 LCT1 Middle Tray **(M077 only)**
	[–10 to 10 / **0** / 0.1 mm]
006	A4 LCT1 Lower Tray **(M077 only)**
	[–10 to 10 / **0** / 0.1 mm]

007	Bypass Tray
	[–10 to 10 / **0** / 0.1 mm]
008	A3 LCT1 Upper Tray
	[–10 to 10 / **0** / 0.1 mm]
009	A3 LCT1 Lower Tray
	[–10 to 10 / **0** / 0.1 mm]
010	A3 LCT2 Upper Tray
	[–10 to 10 / **0** / 0.1 mm]
011	A3 LCT2 Lower Tray
	[–10 to 10 / **0** / 0.1 mm]

2115*	LDB Interval Mag. Adj
001	Bk-A
	[–50 to 50 / **0** / 1 μm]
002	Bk-B
	[–50 to 50 / **0** / 1 μm]
003	Ma-A1
	[–50 to 50 / **0** / 1 μm]
004	Ma-B1
	[–50 to 50 / **0** / 1 μm]
005	Cy-A
	[–50 to 50 / **0** / 1 μm]
006	Cy-B
	[–50 to 50 / **0** / 1 μm]
007	Ye-A1
	[–50 to 50 / **0** / 1 μm]

008	Ye-B1
	[–50 to 50 / **0** / 1 μm]

2117	Skew Adj Setting Reset
001	Reset Skew Motor C Setting
	Executes the skew motor reset for Cyan.
002	Reset Skew Motor M Setting
	Executes the skew motor reset for Magenta.
003	Reset Skew Motor Y Setting
	Executes the skew motor reset for Yellow.
004	Reset Skew Motor K Setting
	[Executes the skew motor reset for Black.

2118	Skew Adjustment Execute
001	Execute Skew Motor C Adj
	Executes the skew motor adjustment for Cyan.
002	Execute Skew Motor M Adj
	Executes the skew motor adjustment for Magenta.
003	Execute Skew Motor Y Adj
	Executes the skew motor adjustment for Yellow.
004	Execute Skew Motor K Adj
	Executes the skew motor adjustment for Black.

2119	Skew Adj Value Display
001	Skew Motor C
	[–100 to 100 / **0** / 1 pulse]

002	Skew Motor M
	[–100 to 100 / **0** / 1 pulse]
003	Skew Motor Y
	[–100 to 100 / **0** / 1 pulse]
004	Skew Motor K
	[–100 to 100 / **0** / 1 pulse]

2130*	LD Beam Adjustment
001	BK LD0
	[350 to 800 / **560** / 1 μW]
002	BK LD1
	[350 to 800 / **560** / 1 μW]
003	BK LD2
	[350 to 800 / **560** / 1 μW]
004	BK LD3
	[350 to 800 / **560** / 1 μW]
005	BK LD4
	[350 to 800 / **560** / 1 μW]
006	BK LD5
	[350 to 800 / **560** / 1 μW]
007	BK LD6
	[350 to 800 / **560** / 1 μW]
008	BK LD7
	[350 to 800 / **560** / 1 μW]
009	C LD0
	[350 to 800 / **560** / 1 μW]

010	C LD1
	[350 to 800 / **560** / 1 μW]
011	C LD2
	[350 to 800 / **560** / 1 μW]
012	C LD3
	[350 to 800 / **560** / 1 μW]
013	C LD4
	[350 to 800 / **560** / 1 μW]
014	C LD5
	[350 to 800 / **560** / 1 μW]
015	C LD6
	[350 to 800 / **560** / 1 μW]
016	C LD7
	[350 to 800 / **560** / 1 μW]
017	M LD0
	[350 to 800 / **560** / 1 μW]
018	M LD1
	[350 to 800 / **560** / 1 μW]
019	M LD2
	[350 to 800 / **560** / 1 μW]
020	M LD3
	[350 to 800 / **560** / 1 μW]
021	M LD4
	[350 to 800 / **560** / 1 μW]
022	M LD5
	[350 to 800 / **560** / 1 μW]

023	M LD6
	[350 to 800 / **560** / 1 μW]
024	M LD7
	[350 to 800 / **560** / 1 μW]
025	Y LD0
	[350 to 800 / **560** / 1 μW]
026	Y LD1
	[350 to 800 / **560** / 1 μW]
027	Y LD2
	[350 to 800 / **560** / 1 μW]
028	Y LD3
	[350 to 800 / **560** / 1 μW]
029	Y LD4
	[350 to 800 / **560** / 1 μW]
030	Y LD5
	[350 to 800 / **560** / 1 μW]
031	Y LD6
	[350 to 800 / **560** / 1 μW]
032	Y LD7
	[350 to 800 / **560** / 1 μW]

2149*	Adjust LR density difference
001	Bk
	[–5 to 5 / **0** / 1 sub-dot]
002	C
	[–120 to 120 / **0** / 1 sub-dot]

003	M
	[–120 to 120 / **0** / 1 sub-dot]
004	Y
	[–120 to 120 / **0** / 1 sub-dot]

2150*	Area Mag. Pulse Adj
001	Bk LD0-1:Area0
	[–120 to 120 / **0** / 1 sub-dot]
002	Bk LD0-1:Area1
	[–120 to 120 / **0** / 1 sub-dot]
003	Bk LD0-1:Area2
	[–120 to 120 / **0** / 1 sub-dot]
004	Bk LD0-1:Area3
	[–120 to 120 / **0** / 1 sub-dot]
005	Bk LD0-1:Area4
	[–120 to 120 / **0** / 1 sub-dot]
006	Bk LD0-1:Area5
	[–120 to 120 / **0** / 1 sub-dot]
007	Bk LD0-1:Area6
	[–120 to 120 / **0** / 1 sub-dot]
008	Bk LD0-1:Area7
	[–120 to 120 / **0** / 1 sub-dot]
009	Bk LD0-1:Area8
	[–120 to 120 / **0** / 1 sub-dot]
081	M LD0-1:Area0
	[–120 to 120 / **0** / 1 sub-dot]

082	M LD0-1:Area1
	[–120 to 120 / **0** / 1 sub-dot]
083	M LD0-1:Area2
	[–120 to 120 / **0** / 1 sub-dot]
084	M LD0-1:Area3
	[–120 to 120 / **0** / 1 sub-dot]
085	M LD0-1:Area4
	[–120 to 120 / **0** / 1 sub-dot]
086	M LD0-1:Area5
	[–120 to 120 / **0** / 1 sub-dot]
087	M LD0-1:Area6
	[–120 to 120 / **0** / 1 sub-dot]
088	M LD0-1:Area7
	[–120 to 120 / **0** / 1 sub-dot]
089	M LD0-1:Area8
	[–120 to 120 / **0** / 1 sub-dot]
161	C LD0-1:Area0
	[–120 to 120 / **0** / 1 sub-dot]
162	C LD0-1:Area1
	[–120 to 120 / **0** / 1 sub-dot]
163	C LD0-1:Area2
	[–120 to 120 / **0** / 1 sub-dot]
164	C LD0-1:Area3
	[–120 to 120 / **0** / 1 sub-dot]
165	C LD0-1:Area4
	[–120 to 120 / **0** / 1 sub-dot]

166	C LD0-1:Area5
	[–120 to 120 / **0** / 1 sub-dot]
167	C LD0-1:Area6
	[–120 to 120 / **0** / 1 sub-dot]
168	C LD0-1:Area7
	[–120 to 120 / **0** / 1 sub-dot]
169	C LD0-1:Area8
	[–120 to 120 / **0** / 1 sub-dot]
241	Y LD0-1:Area0
	[–120 to 120 / **0** / 1 sub-dot]
242	Y LD0-1:Area1
	[–120 to 120 / **0** / 1 sub-dot]
243	Y LD0-1:Area2
	[–120 to 120 / **0** / 1 sub-dot]
244	Y LD0-1:Area3
	[–120 to 120 / **0** / 1 sub-dot]
245	Y LD0-1:Area4
	[–120 to 120 / **0** / 1 sub-dot]
246	Y LD0-1:Area5
	[–120 to 120 / **0** / 1 sub-dot]
247	Y LD0-1:Area6
	[–120 to 120 / **0** / 1 sub-dot]
248	Y LD0-1:Area7
	[–120 to 120 / **0** / 1 sub-dot]
249	Y LD0-1:Area8
	[–120 to 120 / **0** / 1 sub-dot]

System SP2-xxx: 2

2151*	Adjusted Shading Coeff
001	Bk LD0-1 Area01
	[50 to 150 / **100** / 0.1%]
002	Bk LD0-1 Area02
	[50 to 150 / **100** / 0.1%]
003	Bk LD0-1 Area03
	[50 to 150 / **100** / 0.1%]
004	Bk LD0-1 Area04
	[50 to 150 / **100** / 0.1%]
005	Bk LD0-1 Area05
	[50 to 150 / **100** / 0.1%]
006	Bk LD0-1 Area06
	[50 to 150 / **100** / 0.1%]
007	Bk LD0-1 Area07
	[50 to 150 / **100** / 0.1%]
008	Bk LD0-1 Area08
	[50 to 150 / **100** / 0.1%]
009	Bk LD0-1 Area09
	[50 to 150 / **100** / 0.1%]
010	Bk LD0-1 Area10
	[50 to 150 / **100** / 0.1%]
011	Bk LD0-1 Area11
	[50 to 150 / **100** / 0.1%]

012	Bk LD0-1 Area12
	[50 to 150 / **100** / 0.1%]
013	Bk LD0-1 Area13
	[50 to 150 / **100** / 0.1%]
014	Bk LD0-1 Area14
	[50 to 150 / **100** / 0.1%]
015	Bk LD0-1 Area15
	[50 to 150 / **100** / 0.1%]
031	C LD0-1 Area01
	[50 to 150 / **100** / 0.1%]
032	C LD0-1 Area02
	[50 to 150 / **100** / 0.1%]
033	C LD0-1 Area03
	[50 to 150 / **100** / 0.1%]
034	C LD0-1 Area04
	[50 to 150 / **100** / 0.1%]
035	C LD0-1 Area05
	[50 to 150 / **100** / 0.1%]
036	C LD0-1 Area06
	[50 to 150 / **100** / 0.1%]
037	C LD0-1 Area07
	[50 to 150 / **100** / 0.1%]
038	C LD0-1 Area08
	[50 to 150 / **100** / 0.1%]
039	C LD0-1 Area09
	[50 to 150 / **100** / 0.1%]

040	C LD0-1 Area10
	[50 to 150 / **100** / 0.1%]
041	C LD0-1 Area11
	[50 to 150 / **100** / 0.1%]
042	C LD0-1 Area12
	[50 to 150 / **100** / 0.1%]
043	C LD0-1 Area13
	[50 to 150 / **100** / 0.1%]
044	C LD0-1 Area14
	[50 to 150 / **100** / 0.1%]
045	C LD0-1 Area15
	[50 to 150 / **100** / 0.1%]
061	M LD0-1 Area01
	[50 to 150 / **100** / 0.1%]
062	M LD0-1 Area02
	[50 to 150 / **100** / 0.1%]
063	M LD0-1 Area03
	[50 to 150 / **100** / 0.1%]
064	M LD0-1 Area04
	[50 to 150 / **100** / 0.1%]
065	M LD0-1 Area05
	[50 to 150 / **100** / 0.1%]
066	M LD0-1 Area06
	[50 to 150 / **100** / 0.1%]
067	M LD0-1 Area07
	[50 to 150 / **100** / 0.1%]

068	M LD0-1 Area08
	[50 to 150 / **100** / 0.1%]
069	M LD0-1 Area09
	[50 to 150 / **100** / 0.1%]
070	M LD0-1 Area10
	[50 to 150 / **100** / 0.1%]
071	M LD0-1 Area11
	[50 to 150 / **100** / 0.1%]
072	M LD0-1 Area12
	[50 to 150 / **100** / 0.1%]
073	M LD0-1 Area13
	[50 to 150 / **100** / 0.1%]
074	M LD0-1 Area14
	[50 to 150 / **100** / 0.1%]
075	M LD0-1 Area15
	[50 to 150 / **100** / 0.1%]
091	Y LD0-1 Area01
	[50 to 150 / **100** / 0.1%]
092	Y LD0-1 Area02
	[50 to 150 / **100** / 0.1%]
093	Y LD0-1 Area03
	[50 to 150 / **100** / 0.1%]
094	Y LD0-1 Area04
	[50 to 150 / **100** / 0.1%]
095	Y LD0-1 Area05
	[50 to 150 / **100** / 0.1%]

096	Y LD0-1 Area06
	[50 to 150 / **100** / 0.1%]
097	Y LD0-1 Area07
	[50 to 150 / **100** / 0.1%]
098	Y LD0-1 Area08
	[50 to 150 / **100** / 0.1%]
099	Y LD0-1 Area09
	[50 to 150 / **100** / 0.1%]
100	Y LD0-1 Area10
	[50 to 150 / **100** / 0.1%]
101	Y LD0-1 Area11
	[50 to 150 / **100** / 0.1%]
102	Y LD0-1 Area12
	[50 to 150 / **100** / 0.1%]
103	Y LD0-1 Area13
	[50 to 150 / **100** / 0.1%]
104	Y LD0-1 Area14
	[50 to 150 / **100** / 0.1%]
105	Y LD0-1 Area15
	[50 to 150 / **100** / 0.1%]

2152*	Shading Coeff
001	Bk LD0-1 Area01
	[50 to 150 / **100** / 0.1%]
002	Bk LD0-1 Area02
	[50 to 150 / **100** / 0.1%]

003	Bk LD0-1 Area03
	[50 to 150 / **100** / 0.1%]
004	Bk LD0-1 Area04
	[50 to 150 / **100** / 0.1%]
005	Bk LD0-1 Area05
	[50 to 150 / **100** / 0.1%]
006	Bk LD0-1 Area06
	[50 to 150 / **100** / 0.1%]
007	Bk LD0-1 Area07
	[50 to 150 / **100** / 0.1%]
008	Bk LD0-1 Area08
	[50 to 150 / **100** / 0.1%]
009	Bk LD0-1 Area09
	[50 to 150 / **100** / 0.1%]
010	Bk LD0-1 Area10
	[50 to 150 / **100** / 0.1%]
011	Bk LD0-1 Area11
	[50 to 150 / **100** / 0.1%]
012	Bk LD0-1 Area12
	[50 to 150 / **100** / 0.1%]
013	Bk LD0-1 Area13
	[50 to 150 / **100** / 0.1%]
014	Bk LD0-1 Area14
	[50 to 150 / **100** / 0.1%]
015	Bk LD0-1 Area15
	[50 to 150 / **100** / 0.1%]

031	C LD0-1 Area01
	[50 to 150 / **100** / 0.1%]
032	C LD0-1 Area02
	[50 to 150 / **100** / 0.1%]
033	C LD0-1 Area03
	[50 to 150 / **100** / 0.1%]
034	C LD0-1 Area04
	[50 to 150 / **100** / 0.1%]
035	C LD0-1 Area05
	[50 to 150 / **100** / 0.1%]
036	C LD0-1 Area06
	[50 to 150 / **100** / 0.1%]
037	C LD0-1 Area07
	[50 to 150 / **100** / 0.1%]
038	C LD0-1 Area08
	[50 to 150 / **100** / 0.1%]
039	C LD0-1 Area09
	[50 to 150 / **100** / 0.1%]
040	C LD0-1 Area10
	[50 to 150 / **100** / 0.1%]
041	C LD0-1 Area11
	[50 to 150 / **100** / 0.1%]
042	C LD0-1 Area12
	[50 to 150 / **100** / 0.1%]
043	C LD0-1 Area13
	[50 to 150 / **100** / 0.1%]

044	C LD0-1 Area14
	[50 to 150 / **100** / 0.1%]
045	C LD0-1 Area15
	[50 to 150 / **100** / 0.1%]
061	M LD0-1 Area01
	[50 to 150 / **100** / 0.1%]
062	M LD0-1 Area02
	[50 to 150 / **100** / 0.1%]
063	M LD0-1 Area03
	[50 to 150 / **100** / 0.1%]
064	M LD0-1 Area04
	[50 to 150 / **100** / 0.1%]
065	M LD0-1 Area05
	[50 to 150 / **100** / 0.1%]
066	M LD0-1 Area06
	[50 to 150 / **100** / 0.1%]
067	M LD0-1 Area07
	[50 to 150 / **100** / 0.1%]
068	M LD0-1 Area08
	[50 to 150 / **100** / 0.1%]
069	M LD0-1 Area09
	[50 to 150 / **100** / 0.1%]
070	M LD0-1 Area10
	[50 to 150 / **100** / 0.1%]
071	M LD0-1 Area11
	[50 to 150 / **100** / 0.1%]

072	M LD0-1 Area12
	[50 to 150 / **100** / 0.1%]
073	M LD0-1 Area13
	[50 to 150 / **100** / 0.1%]
074	M LD0-1 Area14
	[50 to 150 / **100** / 0.1%]
075	M LD0-1 Area15
	[50 to 150 / **100** / 0.1%]
091	Y LD0-1 Area01
	[50 to 150 / **100** / 0.1%]
092	Y LD0-1 Area02
	[50 to 150 / **100** / 0.1%]
093	Y LD0-1 Area03
	[50 to 150 / **100** / 0.1%]
094	Y LD0-1 Area04
	[50 to 150 / **100** / 0.1%]
095	Y LD0-1 Area05
	[50 to 150 / **100** / 0.1%]
096	Y LD0-1 Area06
	[50 to 150 / **100** / 0.1%]
097	Y LD0-1 Area07
	[50 to 150 / **100** / 0.1%]
098	Y LD0-1 Area08
	[50 to 150 / **100** / 0.1%]
099	Y LD0-1 Area09
	[50 to 150 / **100** / 0.1%]

100	Y LD0-1 Area10
	[50 to 150 / **100** / 0.1%]
101	Y LD0-1 Area11
	[50 to 150 / **100** / 0.1%]
102	Y LD0-1 Area12
	[50 to 150 / **100** / 0.1%]
103	Y LD0-1 Area13
	[50 to 150 / **100** / 0.1%]
104	Y LD0-1 Area14
	[50 to 150 / **100** / 0.1%]
105	Y LD0-1 Area15
	[50 to 150 / **100** / 0.1%]

2153	MUSIC Condition Settings 1
001	Manual Execute:Mode a
	[Execute]
002	Manual Execute:Mode b
	[Execute]
004	Manual Execute:Mode c
	[Execute]
010	Sensor Error Adjust Mode
	[0 or 1 / **1** / -] 0: Off, 1: On
020*	Sensor Power Adj 1
	[0 to 1023 / **400** / 1]
021*	Sensor Power Adj 2
	[0 to 1023 / **400** / 1]

022*	Sensor Power Adj 3
	[0 to 1023 / **400** / 1]

2180	Line Position Adj. Setting Clear
001	Color Regist.
	[Execute]
003	MUSIC Result
	[Execute]
004	Area Magnification Correction : C
	[Execute]
005	Area Magnification Correction : M
	[Execute]
006	Area Magnification Correction : Y
	[Execute]
007	Main Mag. TBL
	[Execute]

2181*	Position Alignment Result **DFU**
001	Bk LD0 2-Point Syn Mag
	[–32767 to 32767 / **0** / 1 sub-dot]
002	Bk LD0 Mag Correct
	[–32767 to 32767 / **0** / 1 sub-dot]
003	Bk LD1 2-Point Syn Mag
	[–32767 to 32767 / **0** / 1 sub-dot]
004	Bk LD1 Mag Correct
	[–32767 to 32767 / **0** / 1 sub-dot]

008	C Sub Skew Left
	[–10000 to 10000 / **0** / 0.1 μm]
009	C Sub Skew Center
	[–10000 to 10000 / **0** / 0.1 μm]
010	C Sub Skew Right
	[–10000 to 10000 / **0** / 0.1 μm]
011	C Skew Amt
	[–10000 to 10000 / **0** / 0.1 μm]
012	C Main Skew Amt
	[–20 to 20 / **0** / 1 sub-dot]
013	C LDO 2-Point Syn Mag
	[–32767 to 32767 / **0** / 1 sub-dot]
014	C LD0 Mag Correct
	[–32767 to 32767 / **0** / 1 sub-dot]
015	C LD1 2-Point Syn Mag
	[–32767 to 32767 / **0** / 1 sub-dot]
016	C LD1 Mag Correct
	[–32767 to 32767 / **0** / 1 sub-dot]
017	C Left Mag
	[–32767 to 32767 / **0** / 1 sub-dot]
018	C Right Mag
	[–32767 to 32767 / **0** / 1 sub-dot]
019	C Sub Scan:Line Corr
	[–29 to 29 / **0** / 1 x8 lines]
020	C Sub Scan:Sub Line Corr
	[–200 to 200 / **0** / 1 μm]

021	C Main Scan:Dot Skew Amt
	[–500 to 500 / **0** / 1 dot]
024	M Sub Skew Left
	[–10000 to 10000 / **0** / 0.1 µm]
025	M Sub Skew Center
	[–10000 to 10000 / **0** / 0.1 µm]
026	M Sub Skew Right
	[–10000 to 10000 / **0** / 0.1 µm]
027	M Skew Amt
	[–10000 to 10000 / **0** / 0.1 µm]
028	M Main Skew Amt
	[–20 to 20 / **0** / 1 sub-dot]
029	M LDO 2-Point Syn Mag
	[–32767 to 32767 /**0** / 1 sub-dot]
030	M LD0 Mag Correct
	[–32767 to 32767 / **0** / 1 sub-dot]
031	M LD1 2-Point Syn Mag
	[–32767 to 32767 / **0** / 1 sub-dot]
032	M LD1 Mag Correct
	[–32767 to 32767 / **0** / 1 sub-dot]
033	M Left Mag
	[–32767 to 32767 / **0** / 1 sub-dot]
034	M Right Mag
	[–32767 to 32767 / **0** / 1 sub-dot]
035	M Sub Scan:Line Corr
	[–29 to 29 / **0** / 1 x8 lines]

036	M Sub Scan:Sub Line Corr
	[–200 to 200 / **0** / 1 μm]
037	M Main Scan:Dot Skew Amt
	[–500 to 500 / **0** / 1 dot]
040	Y Sub Skew Left
	[–10000 to 10000 / **0** / 0.1 μm]
041	Y Sub Skew Center
	[–10000 to 10000 / **0** / 0.1 μm]
042	Y Sub Skew Right
	[–10000 to 10000 / **0** / 0.1 μm]
043	Y Skew Amt
	[–10000 to 10000 / **0** / 0.1 μm]
044	Y Main Skew Amt
	[–20 to 20 / **0** / 1 sub-dot]
045	Y LDO 2-Point Syn Mag
	[–32767 to 32767 / **0** / 1 sub-dot]
046	Y LD0 Mag Correct
	[–32767 to 32767 / **0** / 1 sub-dot]
047	Y LD1 2-Point Syn Mag
	[–32767 to 32767 / **0** / 1 sub-dot]
048	Y LD1 Mag Correct
	[–32767 to 32767 / **0** / 1 sub-dot]
049	Y Left Mag
	[–32767 to 32767 / **0** / 1 sub-dot]
050	Y Right Mag
	[–32767 to 32767 / **0** / 1 sub-dot]

051	Y Sub Scan:Line Corr
	[–29 to 29 / **0** / 1 x8 lines]
052	Y Sub Scan:Sub Line Corr
	[–200 to 200 / **0** / 1 µm]
053	Y Main Scan:Dot Skew Amt
	[–500 to 500 / **0** / 1 dot]

2182*	Color Regist Adj:Sub Offset **DFU**
022	C
	[–50 to 50 / - / 1 x8 lines]
028	M
	[–50 to 50 / - / 1 x8 lines]
034	Y
	[–50 to 50 / - / 1 x8 lines]

2183	Main Scan Length Detection Execute **DFU**
001	BkLD0
	[Execute]
002	BkLD1
	[Execute]
004	MLD0
	[Execute]
005	MLD1
	[Execute]
007	CLD0
	[Execute]

008	CLD1
	[Execute]
010	YLD0
	[Execute]
011	YLD1
	[Execute]

2184	Main Scan Length Detection Target Execute
001	Std Value:Bk
	[Execute]
002	Std Value:M
	[Execute]
003	Std Value:C
	[Execute]
004	Std Value:Y
	[Execute]

2185*	2-Point Std Val Display **DFU**
001	Bk LD0
	[0 to 300000 / **261543** / 1 sub-dot]
002	Bk LD1
	[0 to 300000 / **261543** / 1 sub-dot]
003	M LD0
	[0 to 300000 / **261543** / 1 sub-dot]
004	M LD1
	[0 to 300000 / **261543** / 1 sub-dot]

005	C LD0
	[0 to 300000 / **261543** / 1 sub-dot]
006	C LD1
	[0 to 300000 / **261543** / 1 sub-dot]
007	Y LD0
	[0 to 300000 / **261543** / 1 sub-dot]
008	Y LD1
	[0 to 300000 / **261543** / 1 sub-dot]

2186*	2-Point Synchronizing
001	Selection
	Enables or disables the 2-point synchronizing. [0 or 1 / **1** / 1] 0: Disable, 1: Enable
002	Paper Interval
	Specifies the interval for the 2-point synchronizing during job. [0 to 999 / **1** / 1 sec]
003	Paper Interval Corr: ON/ OFF
	Selects the method of the 2-point synchronizing during job. [0 or 1 / **0** / 1] 0: D-Phase correction, 1: PLL, D-Phase correction

2190*	Line Position Adj. **DFU**
	Turns the magnification correction for each area on or off.
001	Paper Int. Mag.: Subdot: Bk
	[0 or 1 / **1** / 1] 0: Off, 1: On
002	Paper Int. Mag.: Subdot: C
	[0 or 1 / **1** / 1] 0: Off, 1: On

003	Paper Int. Mag.: Subdot: M
	[0 or 1 / **1** / 1] 0: Off, 1: On
004	Paper Int. Mag.: Subdot: Y
	[0 or 1 / **1** / 1] 0: Off, 1: On
005	M. Scan Mag.: Subdot: C
	[0 or 1 / **1** / 1] 0: Off, 1: On
006	M. Scan Mag.: Subdot: M
	[0 or 1 / **1** / 1] 0: Off, 1: On
007	M. Scan Mag.: Subdot: Y
	[0 or 1 / **1** / 1] 0: Off, 1: On
008	Area Mag.: Subdot: C
	[0 or 1 / **1** / 1] 0: Off, 1: On
009	Area Mag.: Subdot: M
	[0 or 1 / **1** / 1] 0: Off, 1: On
010	Area Mag.: Subdot: Y
	[0 or 1 / **1** / 1] 0: Off, 1: On
011	Area Mag.: Subdot: Bk
	[0 or 1 / **1** / 1] 0: Off, 1: On

2191*	Line Position Adj. Offset **DFU**
001	C Mag Adj
	[–1 to 1 / **0** / 0.001%]
002	M Mag Adj
	[–1 to 1 / **0** / 0.001%]
003	Y Mag Adj
	[–1 to 1 / **0** / 0.001%]

004	C Main Regist
	[–512 to 511 / **0** / 1 dot]
005	M Main Regist
	[–512 to 511 / **0** / 1 dot]
006	Y Main Regist
	[–512 to 511 / **0** / 1 dot]
007	C Main Regist
	[–15 to 15 / **0** / 1 sub-dot]
008	M Main Regist
	[–15 to 15 / **0** / 1 sub-dot]
009	Y Main Regist
	[–15 to 15 / **0** / 1 sub-dot]

2193*	MUSIC Condition Settings 3
001	Auto Execution
	Turns the automatic MUSIC execution on or off. [0 or 1 / **1** / 1] 0: Off, 1: On
002	Page: Job End: BW+FC
	[0 to 4000 / **3000** / 1 page]
003	Page: Job End: FC
	[0 to 4000 / **2000** / 1 page]
004	Page: Interrupt: BW+FC
	[0 to 4000 / **2000** / 1 page]
005	Page: Interrupt: FC
	[0 to 4000 / **2000** / 1 page]

006	Page: Interrupt: BW
	[0 to 4000 / **2000** / 1 page]
007	Page: Interrupt: FC
	[0 to 4000 / **2000** / 1 page]
008	MUSIC Thresh:Temp Change
	[0 to 100 / **2** / 1°C]
009	MUSIC Thresh:Elapsed Time
	[1 to 1440 / **30** / 1 min]
010	MUSIC Thresh:Mag Change
	[0 to 10 / **1** / 0.1%]
011	MUSIC Thresh:Temp Change 2
	[0 to 100 / **5** / 1°C]
012	MUSIC Thresh:Elapsed Time 2
	[1 to 1440 / **300** / 1 min]
013	MUSIC Thresh:Temp Change 3
	[0 to 100 / **2** / 1°C]
014	MUSIC Thresh:Elapsed Time 3
	[1 to 1440 / **5** / 1 min]

2194*	MUSIC Execution Result
001	Year
	[2006 to 2050 / **2006** / 1]
002	Month
	[1 to 12 / **4** / 1]
003	Day
	[1 to 31 / **1** / 1]

004	Hour
	[0 to 24 / **1** / 1]
005	Minute
	[0 to 59 / **0** / 1]
006	Temperature
	[0 to 99 / **0** / 1]
007	Execution Result
	Displays the result of the MUSIC adjustment. [0 or 1 / **0** / **1**] 0: Success, 1: Failure
008	Number of Execution
	[0 to 65500 / **0** / 1]
009	Number of Failure
	[0 to 999 / **0** / 1]
010	C Error Counter
	Displays the result of MUSIC for cyan. For details, see "MUSIC Adjustment Result" under "Troubleshooting" chapter in the Field Service Manual. [0 to 5 / **0** / 1]
011	M Error Counter
	Displays the result of MUSIC for magenta. For details, see "MUSIC Adjustment Result" under "Troubleshooting" chapter in the Field Service Manual. [0 to 5 / **0** / 1]
012	Y Error Counter
	Displays the result of MUSIC for yellow. For details, see "MUSIC Adjustment Result" under "Troubleshooting" chapter in the Field Service Manual. [0 to 5 / **0** / 1]

2195*	Procon Coeff **DFU**

001	Bk LD0-1
	[60 to 150 / **100** / 0.1%]
003	C LD0-1
	[60 to 150 / **100** / 0.1%]
005	M LD0-1
	[60 to 150 / **100** / 0.1%]
007	Y LD0-1
	[60 to 150 / **100** / 0.1%]

2196*	Procon Correct Coeff **DFU**
009	Bk LD0-1
	[20 to 255 / **70** / 0.1%]
011	C LD0-1
	[20 to 255 / **70** / 0.1%]
013	M LD0-1
	[20 to 255 / **70** / 0.1%]
015	Y LD0-1
	[20 to 255 / **70** / 0.1%]

2197*	LD DRV Setting **DFU**
001	Max Voltage
	[0.1 to 1 / **0.8** / 0.01V]
002	Adj Voltage
	[0.1 to 1 / **0.2** / 0.01V]
003	Adj Value
	[1 to 255 / **48** / 1 dec]

2201*	Set Charge Grid **DFU**
001	K
	[–999 to 0 / **–700** / 1V]
002	C
	[–999 to 0 / **–700** / 1V]
003	M
	[–999 to 0 / **–700** / 1V]
004	Y
	[–999 to 0 / **–700** / 1V]

2202*	Set Charge Current **DFU**
001	K
	[0 to 1800 / **1800** / 1μA]
002	C
	[0 to 1800 / **1800** / 1μA]
003	M
	[0 to 1800 / **1800** / 1μA]
004	Y
	[0 to 1800 / **1800** / 1μA]

2203*	Charge Current: Display
	Displays the current of the charge corona unit for each color.
001	K
	[0 to 1800 / **1800** / 1μA]
002	C
	[0 to 1800 / **1800** / 1μA]

003	M
	[0 to 1800 / **1800** / 1μA]
004	Y
	[0 to 1800 / **1800** / 1μA]

2212*	Set Dev DC **DFU**
001	Std Speed: K
	[–800 to 0 / **–500** / 1 V]
002	Std Speed: C
	[–800 to 0 / **–500** / 1 V]
003	Std Speed:M
	[–800 to 0 / **–500** / 1 V]
004	Std Speed:Y
	[–800 to 0 / **–500** / 1 V]

2213*	Set LD Power **DFU**
001	Std Speed: K
	[60 to 150 / **100** / 1%]
002	Std Speed: C
	[60 to 150 / **100** / 1%]
003	Std Speed:M
	[60 to 150 / **100** / 1%]
004	Std Speed:Y
	[60 to 150 / **100** / 1%]

2215*	Reciprocity Compensation **DFU**

001	Corr Amt K
	[0 to 255 / **0** / 1 dec]
002	Corr Amt C
	[0 to 255 / **0** / 1 dec]
003	Corr Amt M
	[0 to 255 / **0** / 1 dec]
004	Corr Amt Y
	[0 to 255 / **0** / 1 dec]

2251*	Force Tnr Supply
001	Execute:K
002	Execute:C
003	Execute:M
004	Execute:Y
005	Execute:Col
006	Execute:All Col
007	Manual Execute:ON Time
	[2 to 510 / **100** / 2 msec]
008	Manual Execute:OFF Time
	[2 to 510 / **200** / 2 msec]
009	Manual Execute:Repeat Times
	[1 to 10 / **8** / 1 time]

2252*	Set Tnr Supply
001	Supply Times:K
	[0 to 30 / **10** / 1 time]

002	Supply Times:C
	[0 to 30 / **10** / 1 time]
003	Supply Times:M
	[0 to 30 / **10** / 1 time]
004	Supply Times:Y
	[0 to 30 / **10** / 1 time]

2253	Toner Fill
	When executing SP2-253-001 to -006, make sure the following conditions; 1. Fist, turn off and on the machine after opening the front left or right door. 2. Make sure that the target color toner bottle is installed and the toner hopper cover is close. 3. Enter the SP mode, and then execute SP2-253-xxx.
001	Manual Execute:K
	Executes the manual toner supplement for Black.
002	Manual Execute:C
	Executes the manual toner supplement for Cyan.
003	Manual Execute:M
	Executes the manual toner supplement for Magenta.
004	Manual Execute:Y
	Executes the manual toner supplement for Yellow.
005	Manual Execute:Col
	Executes the manual toner supplement for Color (YMC).
006	Manual Execute:All Col
	Executes the manual toner supplement for all color.

007*	Fill Time:K
	Specifies the time for the manual toner filling for black (SP2253-001). [0 to 200 / **120** / 1 sec]
008*	Fill Time:Col
	Specifies the time for the manual toner filling for color (SP2253-002 to -006). [0 to 200 / **120** / 1 sec]

2255	Developer Exhaust
001	Select Color:KCMY
	[0 x 00 to 0 x 0F / **0x00** / **-**]
002	Execute
	Executes the developer exhaust mode.
009*	Result:K
	[0 or 1 / **1** / -] 0: Failure, 1: Success
010*	Result:C
	[0 or 1 / **1** / -] 0: Failure, 1: Success
011*	Result:M
	[0 or 1 / **1** / -] 0: Failure, 1: Success
012*	Result:Y
	[0 or 1 / **1** / -] 0: Failure, 1: Success

2256	Developer Fill
001	Select Color:KCMY
	[0x00 to 0x0F / **0x00** / 1]

002	Execute
	Executes the developer filling mode.
009*	Result:K
	[0 or 1 / **1** / -] 0: Failure, 1: Success
010*	Result:C
	[0 or 1 / **1** / -] 0: Failure, 1: Success
011*	Result:M
	[0 or 1 / **1** / -] 0: Failure, 1: Success
012*	Result:Y
	[0 or 1 / **1** / -] 0: Failure, 1: Success

System SP2-xxx: 3

2260	Pot.Sn Check
001	Execute: All Col
	Execute the potential sensor check for the all drums (YMCK). • The result of this check can be confirmed with SP2261.
002	Execute:K
	Execute the potential sensor check for the black drum. • The result of this check can be confirmed with SP2261-001.
003	Execute:C
	Execute the potential sensor check for the cyan drum. • The result of this check can be confirmed with SP2261-002.
004	Execute:M
	Execute the potential sensor check for the magenta drum. • The result of this check can be confirmed with SP2261-003.
005	Execute:Y
	Execute the potential sensor check for the yellow drum. • The result of this check can be confirmed with SP2261-004.

2261*	Pot.Sn Chk Disp
001	Vd:K
	[0 to 5 / **0** / 0.01 V]
002	Vd:C
	[0 to 5 / **0** / 0.01 V]
003	Vd:M
	[0 to 5 / **0** / 0.01 V]
004	Vd:Y
	[0 to 5 / **0** / 0.01 V]

2264	ID Sn Chk
001	Execute Chk
	Executes the ID sensor check. The result of this check is displayed in SP3-121-001.

2281*	Image Coverage Rate:Displ
001	Last Page: K
	[0 to 100 / **0** / 0.01%]
002	Last Page: C
	[0 to 100 / **0** / 0.01%]
003	Last Page: M
	[0 to 100 / **0** / 0.01%]
004	Last Page: Y
	[0 to 100 / **0** / 0.01%]

2304*	Env Correct:Set Temp Thresh **DFU**
001	Abs Humid:Thresh 1
	[0 to 63 / **2.5** / 0.01 g/m^3]
002	Abs Humid:Thresh 2
	[0 to 63 / **5** / 0.01 g/m^3]
003	Abs Humid:Thresh 3
	[0 to 63 / **8.4** / 0.01 g/m^3]
004	Abs Humid:Thresh 4
	[0 to 63 / **15** / 0.01 g/m^3]
005	Abs Humid:Thresh 5
	[0 to 63 / **24** / 0.01 g/m^3]

2310*	Vltg Monitor Execution Set **DFU**

001	At Initialization
	[0 or 1 / **1** / -]
002	Set At Recovery
	[0 or 1 / **1** / -]
003	At Job End
	[0 or 1 / **1** / -]

2311*	Manual Lubrication Exe
001	ITB Cleaning
	[Execute]

2322*	Vltg Measure Result **DFU**
100	Next Update SP No
	[1 to 5 / **1** / -]
101	PTR:1
	[0 to 10 / **-** / 0.01 kV]
102	PTR:2
	[0 to 10 / **-** / 0.01 kV]
103	PTR:3
	[0 to 10 / **-** / 0.01 kV]
104	PTR:4
	[0 to 10 / **-** / 0.01 kV]
105	PTR:5
	[0 to 10 / **-** / 0.01 kV]
110	Next Update SP No.
	[1 to 5 / **1** / -]

111	Paper Changed:PTR:1
	[0 to 10 / **0** / 0.01 kV]
112	Paper Changed:PTR:2
	[0 to 10 / **0** / 0.01 kV]
113	Paper Changed:PTR:3
	[0 to 10 / **0** / 0.01 kV]
114	Paper Changed:PTR:4
	[0 to 10 / **0** / 0.01 kV]
115	Paper Changed:PTR:5
	[0 to 10 / **0** / 0.01 kV]
120	Next Update SP No.
	[1 to 30 / **1** / -]
121	Per Page:PTR:1
	[0 to 10 / **0** / 0.01 kV]
122	Per Page:PTR:2
	[0 to 10 / **0** / 0.01 kV]
123	Per Page:PTR:3
	[0 to 10 / **0** / 0.01 kV]
124	Per Page:PTR:4
	[0 to 10 / **0** / 0.01 kV]
125	Per Page:PTR:5
	[0 to 10 / **0** / 0.01 kV]
126	Per Page:PTR:6
	[0 to 10 / **0** / 0.01 kV]
127	Per Page:PTR:7
	[0 to 10 / **0** / 0.01 kV]

128	Per Page:PTR:8
	[0 to 10 / **0** / 0.01 kV]
129	Per Page:PTR:9
	[0 to 10 / **0** / 0.01 kV]
130	Per Page:PTR:10
	[0 to 10 / **0** / 0.01 kV]
131	Per Page:PTR:11 [0 to 10 / **0** / 0.01 kV]
132	Per Page:PTR:12
	[0 to 10 / **0** / 0.01 kV]
133	Per Page:PTR:13
	[0 to 10 / **0** / 0.01 kV]
134	Per Page:PTR:14
	[0 to 10 / **0** / 0.01 kV]
135	Per Page:PTR:15
	[0 to 10 / **0** / 0.01 kV]
136	Per Page:PTR:16
	[0 to 10 / **0** / 0.01 kV]
137	Per Page:PTR:17
	[0 to 10 / **0** / 0.01 kV]
138	Per Page:PTR:18
	[0 to 10 / **0** / 0.01 kV]
139	Per Page:PTR:19
	[0 to 10 / **0** / 0.01 kV]
140	Per Page:PTR:20
	[0 to 10 / **0** / 0.01 kV]

141	Per Page:PTR:21
	[0 to 10 / **0** / 0.01 kV]
142	Per Page:PTR:22
	[0 to 10 / **0** / 0.01 kV]
143	Per Page:PTR:23
	[0 to 10 / **0** / 0.01 kV]
144	Per Page:PTR:24
	[0 to 10 / **0** / 0.01 kV]
145	Per Page:PTR:25
	[0 to 10 / **0** / 0.01 kV]
146	Per Page:PTR:26
	[0 to 10 / **0** / 0.01 kV]
147	Per Page:PTR:27
	[0 to 10 / **0** / 0.01 kV]
148	Per Page:PTR:28
	[0 to 10 / **0** / 0.01 kV]
149	Per Page:PTR:29
	[0 to 10 / **0** / 0.01 kV]
150	Per Page:PTR:30
	[0 to 10 / **0** / 0.01 kV]

2324*	Resist Coeff ON/OFF **DFU**
002	PTR
	[0 or 1 / **1** / -]

2325*	Current Resist Level Disp **DFU**

100	Next Update SP No.	
	[1 to 5 / **-** / 1]	
101	PTR:1	Display the environmental resist level.
102	PTR:2	
103	PTR:3	
104	PTR:4	
105	PTR:5	

2326*	Current Resist Range Disp **DFU**
	Displays the current resist range for PTR.
011	PTR:1
	[0 to 6 / **3** / -]
012	PTR:2
	[0 to 6 / **3** / -]
013	PTR:3
	[0 to 6 / **3** / -]
014	PTR:4
	[0 to 6 / **3** / -]
015	PTR:5
	[0 to 6 / **3** / -]

2327*	Feedback:Current Disp **DFU**
100	Next Update SP No
	[1 to 5 / **1** / -]
101	PTR:1
	[0 to 10 / **0** / 1]

102	PTR:2
	[-300 to 0 / **0** / 1μA]
103	PTR:3
	[-300 to 0 / **0** / 1μA]
104	PTR:4
	[-300 to 0 / **0** / 1μA]
105	PTR:5
	[-300 to 0 / **0** / 1μA]
110	Next Update SP No.
	[1 to 5 / **1** / -]
111	Paper Changed:PTR:1
	[-300 to 0 / **0** / 1μA]
112	Paper Changed:PTR:2
	[-300 to 0 / **0** / 1μA]
113	Paper Changed:PTR:3
	[-300 to 0 / **0** / 1μA]
114	Paper Changed:PTR:4
	[-300 to 0 / **0** / 1μA]
115	Paper Changed:PTR:5
	[-300 to 0 / **0** / 1μA]
120	Next Update SP No.
	[1 to 30 / **1** / -]
121	Per Page:PTR:1
	[-300 to 0 / **0** / 1μA]
122	Per Page:PTR:2
	[-300 to 0 / **0** / 1μA]

123	Per Page:PTR:3
	[-300 to 0 / **0** / 1μA]
124	Per Page:PTR:4
	[-300 to 0 / **0** / 1μA]
125	Per Page:PTR:5
	[-300 to 0 / **0** / 1μA]
126	Per Page:PTR:6
	[-300 to 0 / **0** / 1μA]
127	Per Page:PTR:7
	[-300 to 0 / **0** / 1μA]
128	Per Page:PTR:8
	[-300 to 0 / **0** / 1μA]
129	Per Page:PTR:9
	[-300 to 0 / **0** / 1μA]
130	Per Page:PTR:10
	[-300 to 0 / **0** / 1μA]
131	Per Page:PTR:11
132	Per Page:PTR:12
133	Per Page:PTR:13
134	Per Page:PTR:14
135	Per Page:PTR:15
136	Per Page:PTR:16
137	Per Page:PTR:17
138	Per Page:PTR:18
139	Per Page:PTR:19
140	Per Page:PTR:20

141	Per Page:PTR:21
142	Per Page:PTR:22
143	Per Page:PTR:23
144	Per Page:PTR:24
145	Per Page:PTR:25
146	Per Page:PTR:26
147	Per Page:PTR:27
148	Per Page:PTR:28
149	Per Page:PTR:29
150	Per Page:PTR:30

2329*	Resist Correct:Std Current **DFU**
050	Margin 1 Bk
	[–300 to 0 / **0** / 1 μA]
051	Margin 1 FC
	[–300 to 0 / **0** / 1 μA]
052	Margin 2 Bk
	[–300 to 0 / **0** / 1 μA]
053	Margin 2 FC
	[–300 to 0 / **0** / 1 μA]

2330*	Environment Level Disp **DFU**
100	Next Update SP Num
	[1 to 5 / **1** / -]
101	Current:PTR 1
	Display environmental

102	Current:PTR 2
	Display environmental
103	Current:PTR 3
	Display environmental
104	Current:PTR 4
	Display environmental
105	Current:PTR 5
	Display environmental
200	Next Update SP Num
	[1 to 5 / **1** / -]
201	Paper Changed:PTR 1
	Display environmental
202	Paper Changed:PTR 2
	Display environmental
203	Paper Changed:PTR 3
	Display environmental
204	Paper Changed:PTR 4
	Display environmental
205	Paper Changed:PTR 5
	Display environmental

2331*	Environment Range Disp **DFU**
100	Next Update SP Num
	[1 to 5 / **1** / -]
101	Current:PTR 1
	[1 to 6 / **4** / -]

102	Current:PTR 2
	[1 to 6 / **4** / -]
103	Current:PTR 3
	[1 to 6 / **4** / -]
104	Current:PTR 4
	[1 to 6 / **4** / -]
105	Current:PTR 5
	[1 to 6 / **4** / -]
200	Next Update SP Num
	[1 to 5 / **1** / -]
201	Paper Changed:PTR 1
	[1 to 6 / **4** / -]
202	Paper Changed:PTR 2
	[1 to 6 / **4** / -]
203	Paper Changed:PTR 3
	[[1 to 6 / **4** / -]
204	Paper Changed:PTR 4
	[1 to 6 / **4** / -]
205	Paper Changed:PTR 5
	[1 to 6 / **4** / -]

2334*	Set R Thresh:LLL **DFU**
001	R Thresh1:PTR
	[0 to 10 / **1.33** / 0.01 kV]
002	R Thresh2:PTR
	[0 to 10 / **1.87** / 0.01 kV]

003	R Thresh3:PTR
	[0 to 10 / **3.13** / 0.01 kV]
004	R Thresh4:PTR
	[0 to 10 / **4.8** / 0.01 kV]
005	R Thresh5:PTR
	[0 to 10 / **5.2** / 0.01 kV]

2335*	Set R Thresh:LL **DFU**
001	R Thresh1:PTR
	[0 to 10 / **1** / 0.01 kV]
002	R Thresh2:PTR
	[0 to 10 / **1.33** / 0.01 kV]
003	R Thresh3:PTR
	[0 to 10 / **2.2** / 0.01 kV]
004	R Thresh4:PTR
	[0 to 10 / **3.8** / 0.01 kV]
005	R Thresh5:PTR
	[0 to 10 / **5.2** / 0.01 kV]

2336*	Set R Thresh:ML **DFU**
001	R Thresh1:PTR
	[0 to 10 / **0.73** / 0.01 kV]
002	R Thresh2:PTR
	[0 to 10 / **1.0** / 0.01 kV]
003	R Thresh3:PTR
	[0 to 10 / **1.6** / 0.01 kV]

004	R Thresh4:PTR
	[0 to 10 / **2.93** / 0.01 kV]
005	R Thresh5:PTR
	[0 to 10 / **4.93** / 0.01 kV]

2337*	Set R Thresh: MM **DFU**
001	R Thresh1:PTR
	[0 to 10 / **0.73** / 0.01 kV]
002	R Thresh2:PTR
	[0 to 10 / **1.0** / 0.01 kV]
003	R Thresh3:PTR
	[0 to 10 / **1.6** / 0.01 kV]
004	R Thresh4:PTR
	[0 to 10 / **2.93** / 0.01 kV]
005	R Thresh5:PTR
	[0 to 10 / **4** / 0.01 kV]

2338*	Set R Thresh:MH **DFU**
001	R Thresh1:PTR
	[0 to 10 / **0.4** / 0.01 kV]
002	R Thresh2:PTR
	[0 to 10 / **0.53** / 0.01 kV]
003	R Thresh3:PTR
	[0 to 10 / **0.93** / 0.01 kV]
004	R Thresh4:PTR
	[0 to 10 / **1.53** / 0.01 kV]

005	R Thresh5:PTR
	[0 to 10 / **2.53** / 0.01 kV]

2339*	Set R Thresh:MH **DFU**
001	R Thresh1:PTR
	[0 to 10 / **0.33** / 0.01 kV]
002	R Thresh2:PTR
	[0 to 10 / **0.47** / 0.01 kV]
003	R Thresh3:PTR
	[0 to 10 / **0.67** / 0.01 kV]
004	R Thresh4:PTR
	[0 to 10 / **1.07** / 0.01 kV]
005	R Thresh5:PTR
	[0 to 10 / **1.73** / 0.01 kV]

2340*	R Coeff:PTR
	Adjusts the resist rate for the paper transfer roller.
001	R-3
	[50 to 255 / **225** / 1%]
002	R-2
	[50 to 255 / **225** / 1%]
003	R-1
	[50 to 255 / **200** / 1%]
004	R-0
	[50 to 255 / **180** / 1%]
005	R+1
	[50 to 255 / **170** / 1%]

006	R+2
	[50 to 255 / **160** / 1%]
006	R+3
	[50 to 255 / **140** / 1%]

System SP2-xxx: 4

2370*	Paper Type Range Disp **DFU**
100	Next Update SP Num
	[1 to 5 / **1** / 1]
101	Paper Changed:PTR 1
	[0 to 11 / **0** / 1]
102	Paper Changed:PTR 2
	[0 to 11 / **0** / 1]
103	Paper Changed:PTR 3
	[0 to 11 / **0** / 1]
104	Paper Changed:PTR 4
	[0 to 11 / **0** / 1]
105	Paper Changed:PTR 5
	[0 to 11 / **0** / 1]

2371*	Paper Type Range Disp **DFU**
100	Next Update SP Num
	[1 to 5 / **1** / 1]
101	Paper Changed:PTR 1
	[0 to 5 / **1** / 1]
102	Paper Changed:PTR 2
	[0 to 5 / **1** / 1]
103	Paper Changed:PTR 3
	[0 to 5 / **1** / 1]

104	Paper Changed:PTR 4
	[0 to 5 / **1** / 1]
105	Paper Changed:PTR 5
	[0 to 5 / **1** / 1]

2372*	Eng Spd Coeff **DFU**
001	90ppm
	[50 to 200 / **100** / 1%]
002	70ppm
	[50 to 200 / **78** / 1%]
003	Line Speed 2
	[50 to 200 / **100** / 1%]

2380*	Env Coeff:PTR
001	LLL:Bk:1st
	[50 to 200 / **100** / 1%]
002	LLL:Bk:2nd
	[50 to 200 / **100** / 1%]
003	LLL:FCk:1st
	[50 to 200 / **100** / 1%]
004	LLL:FC:2nd
	[50 to 200 / **100** / 1%]
005	LLL:Non Image
	[50 to 200 / **100** / 1%]
011	LL:Bk:1st
	[50 to 200 / **100** / 1%]

012	LL:Bk:2nd
	[50 to 200 / **100** / 1%]
013	LL:FCk:1st
	[50 to 200 / **100** / 1%]
014	LL:FC:2nd
	[50 to 200 / **100** / 1%]
015	LL:Non Image
	[50 to 200 / **100** / 1%]
021	ML:Bk:1st
	[50 to 200 / **100** / 1%]
022	ML:Bk:2nd
	[50 to 200 / **100** / 1%]
023	ML:FCk:1st
	[50 to 200 / **100** / 1%]
024	ML:FC:2nd
	[50 to 200 / **100** / 1%]
025	ML:Non Image
	[50 to 200 / **100** / 1%]
031	MM:Bk:1st
	[50 to 200 / **100** / 1%]
032	MM:Bk:2nd
	[50 to 200 / **100** / 1%]
033	MM:FCk:1st
	[50 to 200 / **100** / 1%]
034	MM:FC:2nd
	[50 to 200 / **100** / 1%]

035	MM:Non Image
	[50 to 200 / **100** / 1%]
041	MH:Bk:1st
	[50 to 200 / **100** / 1%]
042	MH:Bk:2nd
	[50 to 200 / **100** / 1%]
043	MH:FCk:1st
	[50 to 200 / **100** / 1%]
044	MH:FC:2nd
	[50 to 200 / **100** / 1%]
045	MH:Non Image
	[50 to 200 / **100** / 1%]
051	HH:Bk:1st
	[50 to 200 / **100** / 1%]
052	HH:Bk:2nd
	[50 to 200 / **100** / 1%]
053	HH:FCk:1st
	[50 to 200 / **100** / 1%]
054	HH:FC:2nd
	[50 to 200 / **100** / 1%]
055	HH:Non Image
	[50 to 200 / **100** / 1%]

2401*	Bk:Bias Setting **DFU**
001	Image Transfer:Image Area 1
	[0 to 150 / **60** / 1 μA]

002	Image Transfer:Margin 1
	[0 to 150 / **60** / 1 μA]
005	Image Transfer:Margin 2
	[0 to 150 / **60** / 1 μA]
007	PTR
	[–400 to 0 / **–80** / 1 μA]

2402*	PTR Bias Display
001	Main U Tray:Front
	[–300 to 0 / **0** / 1 μA]
002	Main U Tray:Back
	[–300 to 0 / **0** / 1 μA]
003	Main L Tray:Front
	[–300 to 0 / **0** / 1 μA]
004	Main L Tray:Back
	[–300 to 0 / **0** / 1 μA]
007	A4 LCT U Tray:Front **(M077 only)**
	[–300 to 0 / - / 1 μA]
008	A4 LCT U Tray:Back **(M077 only)**
	[–300 to 0 / - / 1 μA]
009	A4 LCT M Tray:Front **(M077 only)**
	[–300 to 0 / - / 1 μA]
010	A4 LCT M Tray:Back **(M077 only)**
	[–300 to 0 / - / 1 μA]
011	A4 LCT L Tray:Front **(M077 only)**
	[–300 to 0 / - / 1 μA]

012	A4 LCT L Tray:Back **(M077 only)**
	[–300 to 0 / - / 1 μA]
013	Bypass Tray:Front
	[–300 to 0 / **0** / 1 μA]
014	Bypass Tray:Back
	[–300 to 0 / **0** / 1 μA]
015	A3 LCT1 U Tray:Front
	[–300 to 0 / **0**- / 1 μA]
016	A3 LCT1 U Tray:Back
	[–300 to 0 / **0** / 1 μA]
017	A3 LCT1 L Tray:Front
	[–300 to 0 / **0** / 1 μA]
018	A3 LCT1 L Tray:Back
	[–300 to 0 / **0** / 1 μA]
019	A3 LCT2 U Tray:Front
	[–300 to 0 / **0** / 1 μA]
020	A3 LCT2 U Tray:Back
	[–300 to 0 / **0** / 1 μA]
021	A3 LCT2 L Tray:Front
	[–300 to 0 / **0** / 1 μA]
022	A3 LCT2 L Tray:Back
	[–300 to 0 / **0** / 1 μA]

2405*	FC:Bias Setting:Y **DFU**
001	Image Transfer:Image Area 1
	[0 to 150 / ***55*** / 1 μA]

002	Image Transfer:Margin 1
	[0 to 150 / **55** / 1 μA]
003	Image Transfer:Monitor Current
	[0 to 150 / **50** / 1 μA]
004	Image Transfer:Procon
	[0 to 150 / **55** / 1 μA]
007	Image Transfer:Margin 2
	[0 to 150 / **55** / 1 μA]

2406*	FC:Bias Setting:M **DFU**
001	Image Transfer:Image Area 1
	[0 to 150 / **55** / 1 μA]
002	Image Transfer:Margin 1
	[0 to 150 / **55** / 1 μA]
003	Image Transfer:Monitor Current
	[0 to 150 / **50** / 1 μA]
004	Image Transfer:Procon
	[0 to 150 / **55** / 1 μA]
007	Image Transfer:Margin 2
	[0 to 150 / **55** / 1 μA]

2407*	FC:Bias Setting:C **DFU**
001	Image Transfer:Image Area 1
	[0 to 150 / **50** / 1 μA]
002	Image Transfer:Margin 1
	[0 to 150 / **50** / 1 μA]

003	Image Transfer:Monitor Current
	[0 to 150 / **50** / 1 μA]
004	Image Transfer:Procon
	[0 to 150 / **50** / 1 μA]
007	Image Transfer:Margin 2
	[0 to 150 / **50** / 1 μA]

2408*	FC:Bias Setting:K **DFU**
001	Image Transfer:Image Area 1
	[0 to 150 / **55** / 1 μA]
002	Image Transfer:Margin 1
	[0 to 150 / **55** / 1 μA]
003	Image Transfer:Monitor Current
	[0 to 150 / **50** / 1 μA]
004	Image Transfer:Procon
	[0 to 150 / **55** / 1 μA]
007	Image Transfer:Margin 2
	[0 to 150 / **55** / 1 μA]

2411*	Correction ON/OFF **DFU**
001	Image Transfer:Corr All
	[0 or 1 / **0** / -] 0: ON, 1: OFF

2412*	Resist Coeff:ITB **DFU**
001	Threshold Page Setting
	[0 to 200 / **0** / 1 page]

002	Last Environment Range
	[0 to 200 / **0** / 1 page]

2416*	Env Corr:ITransfer:Separation **DFU**
001	Abs Humid:Thresh1
	[0 to 63 / **2.5** / 0.01 g/m^3]
002	Abs Humid:Thresh2
	[0 to 63 / **5** / 0.01 g/m^3]
003	Abs Humid:Thresh3
	[0 to 63 / **8.4** / 0.01 g/m^3]
004	Abs Humid:Thresh4
	[0 to 63 / **15** / 0.01 g/m^3]
005	Abs Humid:Thresh5
	[0 to 63 / **24** / 0.01 g/m^3]

2417*	Image Transfer Bias
001	LEdge ON Timing
	[0 to 100 / **10** / 2 msec]
002	LEdge OFF Timing
	[0 to 100 / **10** / 2 msec]

2420*	Set R Thresh:LLL **DFU**
001	R Thresh1:ITB
	[0 to 10 / **1.35** / 0.01 kV]
002	R Thresh2:ITB
	[0 to 10 / **1.65** / 0.01 kV]

003	R Thresh3:ITB
	[0 to 10 / **2.15** / 0.01 kV]
004	R Thresh4:ITB
	[0 to 10 / **3.45** / 0.01 kV]
005	R Thresh5:ITB
	[0 to 10 / **6** / 0.01 kV]

2421*	Set R Thresh:LL **DFU**
001	R Thresh1:ITB
	[0 to 10 / **1.35** / 0.01 kV]
002	R Thresh2:ITB
	[0 to 10 / **1.65** / 0.01 kV]
003	R Thresh3:ITB
	[0 to 10 / **2.15** / 0.01 kV]
004	R Thresh4:ITB
	[0 to 10 / **3.45** / 0.01 kV]
005	R Thresh5:ITB
	[0 to 10 / **6** / 0.01 kV]

2422*	Set R Thresh:ML **DFU**
001	R Thresh1:ITB
	[0 to 10 / **1.35** / 0.01 kV]
002	R Thresh2:ITB
	[0 to 10 / **1.65** / 0.01 kV]
003	R Thresh3:ITB
	[0 to 10 / **2.15** / 0.01 kV]

004	R Thresh4:ITB
	[0 to 10 / **3.45** / 0.01 kV]
005	R Thresh5:ITB
	[0 to 10 / **6** / 0.01 kV]

2423*	Set R Thresh:MM **DFU**
001	R Thresh1:ITB
	[0 to 10 / **1.35** / 0.01 kV]
002	R Thresh2:ITB
	[0 to 10 / **1.65** / 0.01 kV]
003	R Thresh3:ITB
	[0 to 10 / **2.15** / 0.01 kV]
004	R Thresh4:ITB
	[0 to 10 / **3.45** / 0.01 kV]
005	R Thresh5:ITB
	[0 to 10 / **6** / 0.01 kV]

2424*	Set R Thresh:MH **DFU**
001	R Thresh1:ITB
	[0 to 10 / **1.35** / 0.01 kV]
002	R Thresh2:ITB
	[0 to 10 / **1.65** / 0.01 kV]
003	R Thresh3:ITB
	[0 to 10 / **2.15** / 0.01 kV]
004	R Thresh4:ITB
	[0 to 10 / **3.45** / 0.01 kV]

005	R Thresh5:ITB
	[0 to 10 / **6** / 0.01 kV]

2425*	Set R Thresh:HH **DFU**
001	R Thresh1:ITB
	[0 to 10 / **1.35** / 0.01 kV]
002	R Thresh2:ITB
	[0 to 10 / **1.65** / 0.01 kV]
003	R Thresh3:ITB
	[0 to 10 / **2.15** / 0.01 kV]
004	R Thresh4:ITB
	[0 to 10 / **3.45** / 0.01 kV]
005	R Thresh5:ITB
	[0 to 10 / **6** / 0.01 kV]

2428*	TEdge Cor **DFU**
211	Uncoated Thick3 Front:Bk:PTR
	[0 to 250 / **NA: 80, EU: 100** / 1%]
213	Uncoated Thick3 Front:FC:PTR
	[0 to 250 / **NA: 80, EU: 100** / 1%]
239	Special4 Thick3 Front:Bk:PTR
	[0 to 250 / **100** / 1%]
241	Special4 Thick3 Front:FC:PTR
	[0 to 250 / **100** / 1%]
243	Special5 Thick3 Front:Bk:PTR
	[0 to 250 / **100** / 1%]

245	Special5 Thick3 Front:FC:PTR
	[0 to 250 / **100** / 1%]
247	Special6 Thick3 Front:Bk:PTR
	[0 to 250 / **100** / 1%]
249	Special6 Thick3 Front:FC:PTR
	[0 to 250 / **100** / 1%]

2449*	Env Correction:Display
001	Temperature:Sn K
	[0 to 100 / - / 1°C]
002	R-Humidity:Sn K
	[0 to 100 / - / 1%RH]
003	A-Humidity:Sn K
	[0 to 63 / - / 1 g/m^3]
004	Environment Display:Sn K
	Display the environmental range.
005	Temperature:Sn Y
	[0 to 100 / - / 1°C]
006	R-Humidity:Sn Y
	[0 to 100 / - / 1%RH]
007	A-Humidity:Sn Y
	[0 to 63 / - / 1 g/m^3]
008	Environment Display:Sn Y
	Display the environmental range.

2450*	Resist Coeff:ITB **DFU**

001	R-2:Image Area 1:BK
	[10 to 200 / **116** / 1%]
002	R-1:Image Area 1:BK
	[10 to 200 / **108** / 1%]
003	R0:Image Area 1:BK
	[10 to 200 / **100** / 1%]
004	R+1:Image Area 1:BK
	[10 to 200 / **95** / 1%]
005	R+2:Image Area 1:BK
	[10 to 200 / **90** / 1%]
006	R+3:Image Area 1:BK
	[10 to 200 / **80** / 1%]
101	R-2:Image Area 1:FC
	[10 to 200 / **116** / 1%]
102	R-1:Image Area 1:FC
	[10 to 200 / **108** / 1%]
103	R0:Image Area 1:FC
	[10 to 200 / **100** / 1%]
104	R+1:Image Area 1:FC
	[10 to 200 / **95** / 1%]
105	R+2:Image Area 1:FC
	[10 to 200 / **90** / 1%]
106	R+3:Image Area 1:FC
	[10 to 200 / **80** / 1%]
107	R-2:Procon 1:FC
	[10 to 200 / **116** / 1%]

108	R-1:Procon 1:FC
	[10 to 200 / **108** / 1%]
109	R0:Procon 1:FC
	[10 to 200 / **100** / 1%]
110	R+1:Procon 1:FC
	[10 to 200 / **95** / 1%]
111	R+2:Procon 1:FC
	[10 to 200 / **90** / 1%]
112	R+3:Procon 1:FC
	[10 to 200 / **80** / 1%]

2451*	Vltg Meas Result **DFU**
001	ITB:Y
	[0 to 10 / - / 0.01 kA]
002	ITB:M
	[0 to 10 / - / 0.01 kA]
003	ITB:C
	[0 to 10 / - / 0.01 kA]
004	ITB:K
	[0 to 10 / - / 0.01 kA]

2452*	Vltg Measure:Env **DFU**
001	Image Transfer:Disp:Sn Y
	[ML / MM]
003	I Image Transfer:Disp:Sn K
	[ML / MM]

2453*	Current Resist Lv Disp **DFU**
001	IImage Transfer:Y
002	Image Transfer:M
003	Image Transfer:C
004	Image Transfer:K

2457*	Vd Meas Result **DFU**
001	Resist Coeff:ITB:Y
	[–1 to 0 / **0** / 0.01 kV]
002	Resist Coeff:ITB:M
	[–1 to 0 / **0** / 0.01 kV]
003	Resist Coeff:ITB:C
	[–1 to 0 / **0** / 0.01 kV]
004	Resist Coeff:ITB:K
	[–1 to 0 / **0** / 0.01 kV]

2458*	Vltg Cal Result **DFU**
001	Resist Coeff:ITB:Y
	[0 to 10 / **0** / 0.01 kV]
002	Resist Coeff:ITB:M
	[0 to 10 / **0** / 0.01 kV]
003	Resist Coeff:ITB:C
	[0 to 10 / **0** / 0.01 kV]
004	Resist Coeff:ITB:K
	[0 to 10 / **0** / 0.01 kV]

2470*	Env Coeff:LLL

001	Bk
	[50 to 200 / **100** / 1%]
002	Bk:Non image
	[50 to 200 / **100** / 1%]
011	FC:Y
	[50 to 200 / **100** / 1%]
012	BF:Y:Non image
	[50 to 200 / **100** / 1%]
013	FC:Y:ProCon
	[50 to 200 / **100** / 1%]
021	FC:M
	[50 to 200 / **100** / 1%]
022	FC:M:Non image
	[50 to 200 / **100** / 1%]
023	FC:M:ProCon
	[50 to 200 / **100** / 1%]
031	FC:C
	[50 to 200 / **100** / 1%]
032	BF:C:Non image
	[50 to 200 / **100** / 1%]
033	FC:C:ProCon
	[50 to 200 / **100** / 1%]
041	FC:K
	[50 to 200 / **100** / 1%]
042	BF:K:Non image
	[50 to 200 / **100** / 1%]

043	FC:K:ProCon
	[50 to 200 / **100** / 1%]

2471*	Env Coeff:LL
001	Bk
	[50 to 200 / **100** / 1%]
002	Bk:Non image
	[50 to 200 / **100** / 1%]
011	FC:Y
	[50 to 200 / **100** / 1%]
012	BF:Y:Non image
	[50 to 200 / **100** / 1%]
013	FC:Y:ProCon
	[50 to 200 / **100** / 1%]
021	FC:M
	[50 to 200 / **100** / 1%]
022	FC:M:Non image
	[50 to 200 / **100** / 1%]
023	FC:M:ProCon
	[50 to 200 / **100** / 1%]
031	FC:C
	[50 to 200 / **100** / 1%]
032	BF:C:Non image
	[50 to 200 / **100** / 1%]
033	FC:C:ProCon
	[50 to 200 / **100** / 1%]

041	FC:K
	[50 to 200 / **100** / 1%]
042	BF:K:Non image
	[50 to 200 / **100** / 1%]
043	FC:K:ProCon
	[50 to 200 / **100** / 1%]

2472*	Env Coeff:ML
001	Bk
	[50 to 200 / **100** / 1%]
002	Bk:Non image
	[50 to 200 / **100** / 1%]
011	FC:Y
	[50 to 200 / **100** / 1%]
012	BF:Y:Non image
	[50 to 200 / **100** / 1%]
013	FC:Y:ProCon
	[50 to 200 / **100** / 1%]
021	FC:M
	[50 to 200 / **100** / 1%]
022	FC:M:Non image
	[50 to 200 / **100** / 1%]
023	FC:M:ProCon
	[50 to 200 / **100** / 1%]
031	FC:C
	[50 to 200 / **100** / 1%]

032	BF:C:Non image
	[50 to 200 / **100** / 1%]
033	FC:C:ProCon
	[50 to 200 / **100** / 1%]
041	FC:K
	[50 to 200 / **100** / 1%]
042	BF:K:Non image
	[50 to 200 / **100** / 1%]
043	FC:K:ProCon
	[50 to 200 / **100** / 1%]

2473*	Env Coeff:MM
001	Bk
	[50 to 200 / **100** / 1%]
002	Bk:Non image
	[50 to 200 / **100** / 1%]
011	FC:Y
	[50 to 200 / **100** / 1%]
012	BF:Y:Non image
	[50 to 200 / **100** / 1%]
013	FC:Y:ProCon
	[50 to 200 / **100** / 1%]
021	FC:M
	[50 to 200 / **100** / 1%]
022	FC:M:Non image
	[50 to 200 / **100** / 1%]

023	FC:M:ProCon
	[50 to 200 / **100** / 1%]
031	FC:C
	[50 to 200 / **100** / 1%]
032	BF:C:Non image
	[50 to 200 / **100** / 1%]
033	FC:C:ProCon
	[50 to 200 / **100** / 1%]
041	FC:K
	[50 to 200 / **100** / 1%]
042	BF:K:Non image
	[50 to 200 / **100** / 1%]
043	FC:K:ProCon
	[50 to 200 / **100** / 1%]

2474*	Env Coeff:MH
001	Bk
	[50 to 200 / **100** / 1%]
002	Bk:Non image
	[50 to 200 / **100** / 1%]
011	FC:Y
	[50 to 200 / **100** / 1%]
012	BF:Y:Non image
	[50 to 200 / **100** / 1%]
013	FC:Y:ProCon
	[50 to 200 / **100** / 1%]

021	FC:M
	[50 to 200 / **100** / 1%]
022	FC:M:Non image
	[50 to 200 / **100** / 1%]
023	FC:M:ProCon
	[50 to 200 / **100** / 1%]
031	FC:C
	[50 to 200 / **100** / 1%]
032	BF:C:Non image
	[50 to 200 / **100** / 1%]
033	FC:C:ProCon
	[50 to 200 / **100** / 1%]
041	FC:K
	[50 to 200 / **100** / 1%]
042	BF:K:Non image
	[50 to 200 / **100** / 1%]
043	FC:K:ProCon
	[50 to 200 / **100** / 1%]

2475*	Env Coeff:HH
001	Bk
	[50 to 200 / **100** / 1%]
002	Bk:Non image
	[50 to 200 / **100** / 1%]
011	FC:Y
	[50 to 200 / **100** / 1%]

012	BF:Y:Non image
	[50 to 200 / **100** / 1%]
013	FC:Y:ProCon
	[50 to 200 / **100** / 1%]
021	FC:M
	[50 to 200 / **100** / 1%]
022	FC:M:Non image
	[50 to 200 / **100** / 1%]
023	FC:M:ProCon
	[50 to 200 / **100** / 1%]
031	FC:C
	[50 to 200 / **100** / 1%]
032	BF:C:Non image
	[50 to 200 / **100** / 1%]
033	FC:C:ProCon
	[50 to 200 / **100** / 1%]
041	FC:K
	[50 to 200 / **100** / 1%]
042	BF:K:Non image
	[50 to 200 / **100** / 1%]
043	FC:K:ProCon
	[50 to 200 / **100** / 1%]

2480*	Speed Coeff:ITB
001	90ppm
	[50 to 130 / **100** / 1%]

002	70ppm
	[50 to 130 / **78** / 1%]

System SP2-xxx: 5

2500*	Correction ON/OFF
001	Separation:Environ
	[0 or 1 / **0** / -]

2501*	Sep:Margin Bias **DFU**
001	DC:Bias
	[0 to 10 / **0** / 0.1 μA]
002	AC:Bias
	[8 to 12 / **8** / 0.1 kV]

2520*	Separation:Bias
	Adjusts the switch timing of the separation bias.
001	ON Switch Timing
	[0 to 100 / **20** / 1 msec]
002	OFF Switch Timing
	[0 to 100 / **50** / 1 msec]

2521*	Separation:Env Correction
001	Temp Display:Sensor TR
	[0 to 100 / **0** / 1°C]
002	R-Humidity:Sn TR
	[0 to 100 / **0** / 1%RH]
003	A-Humidity:Sn TR
	[0 to 63 / **0** / 0.01 g/m^3]

004	Env Current Level:Sn TR
	DFU

2522*	Detected Alarm Signal **DFU**
001	HVPS Leak: ITB
	[1 to 50 / **20** / 1 time]
002	HVPS Leak: PTR
	[1 to 50 / **50** / 1 time]
003	HVPS Leak: Separation
	[1 to 50 / **20** / 1 time]

2530*	Env Coeff:DC
2531*	Env Coeff:AC
001	LLL:Bk:1st
	[50 to 200 / **100** / 1%]
002	LLL:Bk:2nd
	[50 to 200 / **100** / 1%]
003	LLL:FC:1st
	[50 to 200 / **100** / 1%]
004	LLL:FC:2nd
	[50 to 200 / **100** / 1%]
011	LL:Bk:1st
	[50 to 200 / **100** / 1%]
012	LL:Bk:2nd
	[50 to 200 / **100** / 1%]
013	LL:FC:1st
	[50 to 200 / **100** / 1%]

014	LL:FC:2nd
	[50 to 200 / **100** / 1%]
021	ML:Bk:1st
	[50 to 200 / **100** / 1%]
022	ML:Bk:2nd
	[50 to 200 / **100** / 1%]
023	ML:FC:1st
	[50 to 200 / **100** / 1%]
024	ML:FC:2nd
	[50 to 200 / **100** / 1%]
031	MM:Bk:1st
	[50 to 200 / **100** / 1%]
032	MM:Bk:2nd
	[50 to 200 / **100** / 1%]
033	MM:FC:1st
	[50 to 200 / **100** / 1%]
034	MM:FC:2nd
	[50 to 200 / **100** / 1%]
041	MH:Bk:1st
	[50 to 200 / **100** / 1%]
042	MH:Bk:2nd
	[50 to 200 / **100** / 1%]
043	MH:FC:1st
	[50 to 200 / **100** / 1%]
044	MH:FC:2nd
	[50 to 200 / **100** / 1%]

051	HH:Bk:1st
	[50 to 200 / **100** / 1%]
052	HH:Bk:2nd
	[50 to 200 / **100** / 1%]
053	HH:FC:1st
	[50 to 200 / **100** / 1%]
054	HH:FC:2nd
	[50 to 200 / **100** / 1%]

2535*	Sep Length:DC:LEdge
2536*	Sep Length:DC:TEdge
001	Paper Weight 1
	[0 to 30 / **5** / 1 mm]
002	Paper Weight 2
	[0 to 30 / **5** / 1 mm]
003	Paper Weight 3
	[0 to 30 / **5** / 1 mm]
004	Paper Weight 4
	[0 to 30 / **5** / 1 mm]
005	Paper Weight 5
	[0 to 30 / **5** / 1 mm]
006	Paper Weight 6
	[0 to 30 / **5** / 1 mm]
007	Paper Weight 7
	[0 to 30 / **5** / 1 mm]

2537*	Sep Length:AC:LEdge

2538*	Sep Length:AC:TEdge
001	Paper Weight 1
	[0 to 30 / **5** / 1 mm]
002	Paper Weight 2
	[0 to 30 / **5** / 1 mm]
003	Paper Weight 3
	[0 to 30 / **5** / 1 mm]
004	Paper Weight 4
	[0 to 30 / **5** / 1 mm]
005	Paper Weight 5
	[0 to 30 / **5** / 1 mm]
006	Paper Weight 6
	[0 to 30 / **5** / 1 mm]
007	Paper Weight 7
	[0 to 30 / **5** / 1 mm]

2540*	Speed Coeff:DC
001	90ppm
	[50 to 130 / **100** / 1 %]
002	70ppm
	[50 to 130 / **78** / 1 %]

2541*	Speed Coeff:AC
001	90ppm
	[50 to 130 / **100** / 1 %]
002	70ppm
	[50 to 130 / **78** / 1 %]

2761*	Paper Size:Coeff
001	Weight 1:1st
	[50 to 600 / **140** / 1%]
002	Weight 2:1st
	[50 to 600 / **160** / 1%]
003	Weight 3:1st
	[50 to 600 / **165** / 1%]
004	Weight 4:1st
	[50 to 600 / **170** / 1%]
005	Weight 5:1st
	[50 to 600 / **175** / 1%]
006	Weight 6:1st
	[50 to 600 / **180** / 1%]
007	Weight 7:1st
	[50 to 600 / **190** / 1%]

2762*	Paper Size:Coeff
001	Weight 1:2nd
	[50 to 600 / **140** / 1%]
002	Weight 2:2nd
	[50 to 600 / **160** / 1%]
003	Weight 3:2nd
	[50 to 600 / **165** / 1%]
004	Weight 4:2nd
	[50 to 600 / **170** / 1%]

005	Weight 5:2nd
	[50 to 600 / **175** / 1%]
006	Weight 6:2nd
	[50 to 600 / **180** / 1%]
007	Weight 7:2nd
	[50 to 600 / **190** / 1%]

2803	Chg Wire Cleaning
	Cleans the charge corona unit for each color.
001	Execute Wire Cleaning K
002	Execute Wire Cleaning C
003	Execute Wire Cleaning M
004	Execute Wire Cleaning Y

2804	Chg Wire Cleaning
001*	Execution Timing
	[0 to 4 / **1** / -] 0: No Exo, 1: procon Sync, 2: Interval, 3: Power On & Procon Sync, 4: Power On & Interval
002*	Chg Wire Cleaning Int/Dist Execution Interval:K
	[100 to 100000 / **3000** / 1 sheet]
003*	Chg Wire Cleaning Int/Dist Execution Interval:C
	[100 to 100000 / **3000** / 1 sheet]
004*	Chg Wire Cleaning Int/Dist Execution Interval:M
	[100 to 100000 / **3000** / 1 sheet]
005*	Chg Wire Cleaning Int/Dist Execution Interval:Y
	[100 to 100000 / **3000** / 1 sheet]

006*	Disp CH Clean Cnt:K
	Displays the execution times of the charge cleaning unit K. [0 to 400000 / **0** / 1]
007*	Disp CH Clean Cnt:C
	Displays the execution times of the charge cleaning unit C. [0 to 400000 / **0** / 1]
008*	Disp CH Clean Cnt:M
	Displays the execution times of the charge cleaning unit M. [0 to 400000 / **0** / 1]
009*	Disp CH Clean Cnt:Y
	Displays the execution times of the charge cleaning unit Y. [0 to 400000 / **0** / 1]
010	Clear CH Clean Cnt:K
	Clears the counter for the charge cleaning unit K.
011	Clear CH Clean Cnt:C
	Clears the counter for the charge cleaning unit C.
012	Clear CH Clean Cnt:M
	Clears the counter for the charge cleaning unit M.
013	Clear CH Clean Cnt:Y
	Clears the counter for the charge cleaning unit Y.
014*	Environment Range: Power On
	Displays the environment range at power-on.
015*	Execution Env Range Setting
	Select the environment range for the charge corona unit cleaning at power-on. [1 to 6 / **6** / -] 1: LLL, 2: LL, 3: ML, 4: MM, 5. MH, 6: HH

2810	Clear blurred img
001	Execute
	This SP is used for recovering from blurred image on outputs at first printing just after turning on the machine.
002	select clear blurred img mode
	Selects the execution condition for the clear blurred image mode. [0 to 2 / **0** / 1] 0: Clear blurred img always on 1: Clear blurred img HH on 2: Clear blurred img always off
003	execute page
	Specifies the interval for the execution of the clear blurred image. [0 to 9999 / **30** / 1000 pages/1 step]
004	execute time
	Specifies the execution time for the clear blurred image mode. [120 to 360 / **120** / 1 sec.]
005	execute environment
	[0 to 100 / **13** / 1 g/m^3]

2812*	Job Divide mode
001	Continuous Printing
	Specifies the threshold pages for the job divide mode. The machine will stop operation for 120 seconds (adjustable with SP2812-004) after the threshold pages are printed. [0 to 9999 / **2000** / 1 page]

002	Operating Environment
	Selects the execution condition for the job divide mode [0 to 2 / **0** / 1] 0: Always off 1: On in LLL or LL condition 2: Always on
003	Toner Coverage
	Specifies the threshold coverage for the job divide mode. [0 to 100 / **20** / 1 %]
004	Waiting Time
	Specifies the waiting time for the job divide mode. [0 to 999 / **120** / 1 sec]

2834*	LEdge Coeff:On
001	Plain:Weight 1
	[0 to 30 / **10** / 1 msec.]
002	Plain:Weight 2
	[0 to 30 / **10** / 1 msec.]
003	Plain:Weight 3
	[0 to 30 / **10** / 1 msec.]
004	Plain:Weight 4
	[0 to 30 / **10** / 1 msec.]
005	Plain:Weight 5
	[0 to 30 / **10** / 1 msec.]
006	Plain:Weight 6
	[0 to 30 / **10** / 1 msec.]

007	Plain:Weight 7
	[0 to 30 / **10** / 1 msec.]
012	Glossy:Weight 2
	[0 to 30 / **10** / 1 msec.]
013	Glossy:Weight 3
	[0 to 30 / **10** / 1 msec.]
014	Glossy:Weight 4
	[0 to 30 / **10** / 1 msec.]
015	Glossy:Weight 5
	[0 to 30 / **10** / 1 msec.]
016	Glossy:Weight 6
	[0 to 30 / **10** / 1 msec.]
017	Glossy:Weight 7
	[0 to 30 / **10** / 1 msec.]
022	Matte:Weight 2
	[0 to 30 / **10** / 1 msec.]
023	Matte:Weight 3
	[0 to 30 / **10** / 1 msec.]
024	Matte:Weight 4
	[0 to 30 / **10** / 1 msec.]
025	Matte:Weight 5
	[0 to 30 / **10** / 1 msec.]
026	Matte:Weight 6
	[0 to 30 / **10** / 1 msec.]
027	Matte:Weight 7
	[0 to 30 / **10** / 1 msec.]

075	Envelope:Weight 5
	[0 to 30 / **10** / 1 msec.]
076	Envelope:Weight 6
	[0 to 30 / **10** / 1 msec.]
077	Envelope:Weight 7
	[0 to 30 / **10** / 1 msec.]

2838*	TEdge Coeff:On
001	Plain:Weight 1
	[0 to 30 / **0** / 1 msec.]
002	Plain:Weight 2
	[0 to 30 / **0** / 1 msec.]
003	Plain:Weight 3
	[0 to 30 / **0** / 1 msec.]
004	Plain:Weight 4
	[0 to 30 / **0** / 1 msec.]
005	Plain:Weight 5
	[0 to 30 / **0** / 1 msec.]
006	Plain:Weight 6
	[0 to 30 / **0** / 1 msec.]
007	Plain:Weight 7
	[0 to 30 / **0** / 1 msec.]
012	Glossy:Weight 2
	[0 to 30 / **0** / 1 msec.]
013	Glossy:Weight 3
	[0 to 30 / **0** / 1 msec.]

014	Glossy:Weight 4
	[0 to 30 / **0** / 1 msec.]
015	Glossy:Weight 5
	[0 to 30 / **0** / 1 msec.]
016	Glossy:Weight 6
	[0 to 30 / **0** / 1 msec.]
017	Glossy:Weight 7
	[0 to 30 / **0** / 1 msec.]
022	Matte:Weight 2
	[0 to 30 / **0** / 1 msec.]
023	Matte:Weight 3
	[0 to 30 / **0** / 1 msec.]
024	Matte:Weight 4
	[0 to 30 / **0** / 1 msec.]
025	Matte:Weight 5
	[0 to 30 / **0** / 1 msec.]
026	Matte:Weight 6
	[0 to 30 / **0** / 1 msec.]
027	Matte:Weight 7
	[0 to 30 / **0** / 1 msec.]
075	Envelope:Weight 5
	[0 to 30 / **0** / 1 msec.]
076	Envelope:Weight 6
	[0 to 30 / **0** / 1 msec.]
077	Envelope:Weight 7
	[0 to 30 / **0** / 1 msec.]

2840*	SepDC:1st
2841*	SepDC:2nd
001	Plain:Weight 1
	[0 to 10 / **5** / 1 μA]
002	Plain:Weight 2
	[0 to 10 / **5** / 1 μA]
003	Plain:Weight 3
	[0 to 10 / **5** / 1 μA]
004	Plain:Weight 4
	[0 to 10 / **5** / 1 μA]
005	Plain:Weight 5
	[0 to 10 / **5** / 1 μA]
006	Plain:Weight 6
	[0 to 10 / **5** / 1 μA]
007	Plain:Weight 7
	[0 to 10 / **5** / 1 μA]
012	Glossy:Weight 2
	[0 to 10 / **5** / 1 μA]
013	Glossy:Weight 3
	[0 to 10 / **5** / 1 μA]
014	Glossy:Weight 4
	[0 to 10 / **5** / 1 μA]
015	Glossy:Weight 5
	[0 to 10 / **5** / 1 μA]
016	Glossy:Weight 6
	[0 to 10 / **5** / 1 μA]

017	Glossy:Weight 7
	[0 to 10 / **5** / 1 μA]
022	Matte:Weight 2
	[0 to 10 / **5** / 1 μA]
023	Matte:Weight 3
	[0 to 10 / **5** / 1 μA]
024	Matte:Weight 4
	[0 to 10 / **5** / 1 μA]
025	Matte:Weight 5
	[0 to 10 / **5** / 1 μA]
026	Matte:Weight 6
	[0 to 10 / **5** / 1 μA]
027	Matte:Weight 7
	[0 to 10 / **5** / 1 μA]
075	Envelope:Weight 5
	[0 to 10 / **5** / 1 μA]
076	Envelope:Weight 6
	[0 to 10 / **5** / 1 μA]
077	Envelope:Weight 7
	[0 to 10 / **5** / 1 μA]

2842*	SepAC:1st
2843*	SepAC:2nd
001	Plain:Weight 1
	[8 to 12 / **10** / 0.1 kV]

002	Plain:Weight 2
	[8 to 12 / **10** / 0.1 kV]
003	Plain:Weight 3
	[8 to 12 / **10** / 0.1 kV]
004	Plain:Weight 4
	[8 to 12 / **10** / 0.1 kV]
005	Plain:Weight 5
	[8 to 12 / **10** / 0.1 kV]
006	Plain:Weight 6
	[8 to 12 / **10** / 0.1 kV]
007	Plain:Weight 7
	[8 to 12 / **10** / 0.1 kV]
012	Glossy:Weight 2
	[8 to 12 / **10** / 0.1 kV]
013	Glossy:Weight 3
	[8 to 12 / **10** / 0.1 kV]
014	Glossy:Weight 4
	[8 to 12 / **10** / 0.1 kV]
015	Glossy:Weight 5
	[8 to 12 / **10** / 0.1 kV]
016	Glossy:Weight 6
	[8 to 12 / **10** / 0.1 kV]
017	Glossy:Weight 7
	[8 to 12 / **10** / 0.1 kV]
022	Matte:Weight 2
	[8 to 12 / **10** / 0.1 kV]

023	Matte:Weight 3
	[8 to 12 / **10** / 0.1 kV]
024	Matte:Weight 4
	[8 to 12 / **10** / 0.1 kV]
025	Matte:Weight 5
	[8 to 12 / **10** / 0.1 kV]
026	Matte:Weight 6
	[8 to 12 / **10** / 0.1 kV]
027	Matte:Weight 7
	[8 to 12 / **10** / 0.1 kV]
075	Envelope:Weight 5
	[8 to 12 / **10** / 0.1 kV]
076	Envelope:Weight 6
	[8 to 12 / **10** / 0.1 kV]
077	Envelope:Weight 7
	[8 to 12 / **10** / 0.1 kV]

2844*	SepDC:LEdge:Coeff
2845*	SepDC:TEdge:Coeff
001	Plain:Weight 1
	[50 to 200 / **100** / 1%]
002	Plain:Weight 2
	[50 to 200 / **100** / 1%]
003	Plain:Weight 3
	[50 to 200 / **100** / 1%]

004	Plain:Weight 4
	[50 to 200 / **100** / 1%]
005	Plain:Weight 5
	[50 to 200 / **100** / 1%]
006	Plain:Weight 6
	[50 to 200 / **100** / 1%]
007	Plain:Weight 7
	[50 to 200 / **100** / 1%]
012	Glossy:Weight 2
	[50 to 200 / **100** / 1%]
013	Glossy:Weight 3
	[50 to 200 / **100** / 1%]
014	Glossy:Weight 4
	[50 to 200 / **100** / 1%]
015	Glossy:Weight 5
	[50 to 200 / **100** / 1%]
016	Glossy:Weight 6
	[50 to 200 / **100** / 1%]
017	Glossy:Weight 7
	[50 to 200 / **100** / 1%]
022	Matte:Weight 2
	[50 to 200 / **100** / 1%]
023	Matte:Weight 3
	[50 to 200 / **100** / 1%]
024	Matte:Weight 4
	[50 to 200 / **100** / 1%]

025	Matte:Weight 5
	[50 to 200 / **100** / 1%]
026	Matte:Weight 6
	[50 to 200 / **100** / 1%]
027	Matte:Weight 7
	[50 to 200 / **100** / 1%]
075	Envelope:Weight 5
	[50 to 200 / **100** / 1%]
076	Envelope:Weight 6
	[50 to 200 / **100** / 1%]
077	Envelope:Weight 7
	[50 to 200 / **100** / 1%]

2846*	SepAC:LEdge:Coeff
2847*	SepAC:TEdge:Coeff
001	Plain:Weight 1
	[50 to 200 / **105** / 1%]
002	Plain:Weight 2
	[50 to 200 / **105** / 1%]
003	Plain:Weight 3
	[50 to 200 / **105** / 1%]
004	Plain:Weight 4
	[50 to 200 / **105** / 1%]
005	Plain:Weight 5
	[50 to 200 / **105** / 1%]

006	Plain:Weight 6
	[50 to 200 / **105** / 1%]
007	Plain:Weight 7
	[50 to 200 / **105** / 1%]
012	Glossy:Weight 2
	[50 to 200 / **105** / 1%]
013	Glossy:Weight 3
	[50 to 200 / **105** / 1%]
014	Glossy:Weight 4
	[50 to 200 / **105** / 1%]
015	Glossy:Weight 5
	[50 to 200 / **105** / 1%]
016	Glossy:Weight 6
	[50 to 200 / **105** / 1%]
017	Glossy:Weight 7
	[50 to 200 / **105** / 1%]
022	Matte:Weight 2
	[50 to 200 / **105** / 1%]
023	Matte:Weight 3
	[50 to 200 / **105** / 1%]
024	Matte:Weight 4
	[50 to 200 / **105** / 1%]
025	Matte:Weight 5
	[50 to 200 / **105** / 1%]
026	Matte:Weight 6
	[50 to 200 / **105** / 1%]

027	Matte:Weight 7
	[50 to 200 / **105** / 1%]
075	Envelope:Weight 5
	[50 to 200 / **105** / 1%]
076	Envelope:Weight 6
	[50 to 200 / **105** / 1%]
077	Envelope:Weight 7
	[50 to 200 / **105** / 1%]

2850*	PTR Bias:Bk
001	Plain:Weight 1
	[-300 to 0 / **-60** / 1 μA]
002	Plain:Weight 2
	[-300 to 0 / **-60** / 1 μA]
003	Plain:Weight 3
	[-300 to 0 / **-60** / 1 μA]
004	Plain:Weight 4
	[-300 to 0 / **-60** / 1 μA]
005	Plain:Weight 5
	[-300 to 0 / **-60** / 1 μA]
006	Plain:Weight 6
	[-300 to 0 / **-60** / 1 μA]
007	Plain:Weight 7
	[-300 to 0 / **-60**/ 1 μA]
012	Glossy:Weight 2
	[-300 to 0 / **-60** / 1 μA]

013	Glossy:Weight 3
	[-300 to 0 / **-60** / 1 μA]
014	Glossy:Weight 4
	[-300 to 0 / **-60** / 1 μA]
015	Glossy:Weight 5
	[-300 to 0 / **-60** / 1 μA]
016	Glossy:Weight 6
	[-300 to 0 / **-60** / 1 μA]
017	Glossy:Weight 7
	[-300 to 0 / **-60** / 1 μA]
022	Matte:Weight 2
	[-300 to 0 / **-60** / 1 μA]
023	Matte:Weight 3
	[-300 to 0 / **-60** / 1 μA]
024	Matte:Weight 4
	[-300 to 0 / **-60** / 1 μA]
025	Matte:Weight 5
	[-300 to 0 / **-60** / 1 μA]
026	Matte:Weight 6
	[-300 to 0 / **-60** / 1 μA]
027	Matte:Weight 7
	[-300 to 0 / **-60** / 1 μA]
075	Envelope:Weight 5
	[-300 to 0 / **-60** / 1 μA]
076	Envelope:Weight 6
	[-300 to 0 / **-60** / 1 μA]

077	Envelope:Weight 7
	[-300 to 0 / **-60** / 1 μA]

2851*	PTR Bias:FC
001	Plain:Weight 1
	[-300 to 0 / **-85** / 1 μA]
002	Plain:Weight 2
	[-300 to 0 / **-85** / 1 μA]
003	Plain:Weight 3
	[-300 to 0 / **-85** / 1 μA]
004	Plain:Weight 4
	[-300 to 0 / **-85** / 1 μA]
005	Plain:Weight 5
	[-300 to 0 / **-85** / 1 μA]
006	Plain:Weight 6
	[-300 to 0 / **-85** / 1 μA]
007	Plain:Weight 7
	[-300 to 0 / **-85** / 1 μA]
012	Glossy:Weight 2
	[-300 to 0 / **-85** / 1 μA]
013	Glossy:Weight 3
	[-300 to 0 / **-85** / 1 μA]
014	Glossy:Weight 4
	[-300 to 0 / **-85** / 1 μA]
015	Glossy:Weight 5
	[-300 to 0 / **-85** / 1 μA]

016	Glossy:Weight 6
	[-300 to 0 / **-85** / 1 μA]
017	Glossy:Weight 7
	[-300 to 0 / **-85** / 1 μA]
022	Matte:Weight 2
	[-300 to 0 / **-85** / 1 μA]
023	Matte:Weight 3
	[-300 to 0 / **-85** / 1 μA]
024	Matte:Weight 4
	[-300 to 0 / **-85** / 1 μA]
025	Matte:Weight 5
	[-300 to 0 / **-85** / 1 μA]
026	Matte:Weight 6
	[-300 to 0 / **-85** / 1 μA]
027	Matte:Weight 7
	[-300 to 0 / **-85** / 1 μA]
075	Envelope:Weight 5
	[-300 to 0 / **-85** / 1 μA]
076	Envelope:Weight 6
	[-300 to 0 / **-85** / 1 μA]
077	Envelope:Weight 7
	[-300 to 0 / **-85** / 1 μA]

System SP2-xxx: 6

2852*	LEdge Coeff:Bk
001	Plain:Weight 1
	[0 to 300 / **160** / 1%]
002	Plain:Weight 2
	[0 to 300 / **155** / 1%]
003	Plain:Weight 3
	[0 to 300 / **155** / 1%]
004	Plain:Weight 4
	[0 to 300 / **150** / 1%]
005	Plain:Weight 5
	[0 to 300 / **150** / 1%]
006	Plain:Weight 6
	[0 to 300 / **150** / 1%]
007	Plain:Weight 7
	[0 to 300 / **150** / 1%]
012	Glossy:Weight 2
	[0 to 300 / **120** / 1%]
013	Glossy:Weight 3
	[0 to 300 / **155** / 1%]
014	Glossy:Weight 4
	[0 to 300 / **150** / 1%]
015	Glossy:Weight 5
	[0 to 300 / **150** / 1%]

016	Glossy:Weight 6
	[0 to 300 / **150** / 1%]
017	Glossy:Weight 7
	[0 to 300 / **150** / 1%]
022	Matte:Weight 2
	[0 to 300 / **120** / 1%]
023	Matte:Weight 3
	[0 to 300 / **155** / 1%]
024	Matte:Weight 4
	[0 to 300 / **150** / 1%]
025	Matte:Weight 5
	[0 to 300 / **150** / 1%]
026	Matte:Weight 6
	[0 to 300 / **150** / 1%]
027	Matte:Weight 7
	[0 to 300 / **150** / 1%]
075	Envelope:Weight 5
	[0 to 300 / **150** / 1%]
076	Envelope:Weight 6
	[0 to 300 / **150** / 1%]
077	Envelope:Weight 7
	[0 to 300 / **150** / 1%]

2853*	LEdge Coeff:FC
001	Plain:Weight 1
	[0 to 300 / **145** / 1%]

002	Plain:Weight 2
	[0 to 300 / **145** / 1%]
003	Plain:Weight 3
	[0 to 300 / **140** / 1%]
004	Plain:Weight 4
	[0 to 300 / **140** / 1%]
005	Plain:Weight 5
	[0 to 300 / **240** / 1%]
006	Plain:Weight 6
	[0 to 300 / **240** / 1%]
007	Plain:Weight 7
	[0 to 300 / **240** / 1%]
012	Glossy:Weight 2
	[0 to 300 / **110** / 1%]
013	Glossy:Weight 3
	[0 to 300 / **140** / 1%]
014	Glossy:Weight 4
	[0 to 300 / **140** / 1%]
015	Glossy:Weight 5
	[0 to 300 / **240** / 1%]
016	Glossy:Weight 6
	[0 to 300 / **240** / 1%]
017	Glossy:Weight 7
	[0 to 300 / **240** / 1%]
022	Matte:Weight 2
	[0 to 300 / **110** / 1%]

023	Matte:Weight 3
	[0 to 300 / **140** / 1%]
024	Matte:Weight 4
	[0 to 300 / **140** / 1%]
025	Matte:Weight 5
	[0 to 300 / **240** / 1%]
026	Matte:Weight 6
	[0 to 300 / **240** / 1%]
027	Matte:Weight 7
	[0 to 300 / **240** / 1%]
075	Envelope:Weight 5
	[0 to 300 / **240** / 1%]
076	Envelope:Weight 6
	[0 to 300 / **240** / 1%]
077	Envelope:Weight 7
	[0 to 300 / **240** / 1%]

2854*	LEdge Length:Bk
2855*	LEdge Length:FC
001	Plain:Weight 1
	[0 to 30 / **2** / 1 mm]
002	Plain:Weight 2
	[0 to 30 / **2** / 1 mm]
003	Plain:Weight 3
	[0 to 30 / **2** / 1 mm]

004	Plain:Weight 4
	[0 to 30 / **2** / 1 mm]
005	Plain:Weight 5
	[0 to 30 / **2** / 1 mm]
006	Plain:Weight 6
	[0 to 30 / **2** / 1 mm]
007	Plain:Weight 7
	[0 to 30 / **2** / 1 mm]
012	Glossy:Weight 2
	[0 to 30 / **2** / 1 mm]
013	Glossy:Weight 3
	[0 to 30 / **2** / 1 mm]
014	Glossy:Weight 4
	[0 to 30 / **2** / 1 mm]
015	Glossy:Weight 5
	[0 to 30 / **2** / 1 mm]
016	Glossy:Weight 6
	[0 to 30 / **2** / 1 mm]
017	Glossy:Weight 7
	[0 to 30 / **2** / 1 mm]
022	Matte:Weight 2
	[0 to 30 / **2** / 1 mm]
023	Matte:Weight 3
	[0 to 30 / **2** / 1 mm]
024	Matte:Weight 4
	[0 to 30 / **2** / 1 mm]

025	Matte:Weight 5
	[0 to 30 / **2** / 1 mm]
026	Matte:Weight 6
	[0 to 30 / **2** / 1 mm]
027	Matte:Weight 7
	[0 to 30 / **2** / 1 mm]
075	Envelope:Weight 5
	[0 to 30 / **2** / 1 mm]
076	Envelope:Weight 6
	[0 to 30 / **2** / 1 mm]
077	Envelope:Weight 7
	[0 to 30 / **2** / 1 mm]

2856*	TEdge Coeff:Bk
001	Plain:Weight 1
	[0 to 300 / **95** / 1%]
002	Plain:Weight 2
	[0 to 300 / **95** / 1%]
003	Plain:Weight 3
	[0 to 300 / **90** / 1%]
004	Plain:Weight 4
	[0 to 300 / **90** / 1%]
005	Plain:Weight 5
	[0 to 300 / **90** / 1%]
006	Plain:Weight 6
	[0 to 300 / **90** / 1%]

007	Plain:Weight 7
	[0 to 300 / **90** / 1%]
012	Glossy:Weight 2
	[0 to 300 / **100** / 1%]
013	Glossy:Weight 3
	[0 to 300 / **100** / 1%]
014	Glossy:Weight 4
	[0 to 300 / **100** / 1%]
015	Glossy:Weight 5
	[0 to 300 / **100** / 1%]
016	Glossy:Weight 6
	[0 to 300 / **100** / 1%]
017	Glossy:Weight 7
	[0 to 300 / **100** / 1%]
022	Matte:Weight 2
	[0 to 300 / **100** / 1%]
023	Matte:Weight 3
	[0 to 300 / **100** / 1%]
024	Matte:Weight 4
	[0 to 300 / **100** / 1%]
025	Matte:Weight 5
	[0 to 300 / **100** / 1%]
026	Matte:Weight 6
	[0 to 300 / **100** / 1%]
027	Matte:Weight 7
	[0 to 300 / **100** / 1%]

075	Envelope:Weight 5
	[0 to 300 / **90** / 1%]
076	Envelope:Weight 6
	[0 to 300 / **90** / 1%]
077	Envelope:Weight 7
	[0 to 300 / **90** / 1%]

2857*	TEdge Coeff:FC
001	Plain:Weight 1
	[0 to 300 / **90** / 1%]
002	Plain:Weight 2
	[0 to 300 / **90** / 1%]
003	Plain:Weight 3
	[0 to 300 / **85** / 1%]
004	Plain:Weight 4
	[0 to 300 / **85** / 1%]
005	Plain:Weight 5
	[0 to 300 / **85** / 1%]
006	Plain:Weight 6
	[0 to 300 / **85** / 1%]
007	Plain:Weight 7
	[0 to 300 / **85** / 1%]
012	Glossy:Weight 2
	[0 to 300 / **95** / 1%]
013	Glossy:Weight 3
	[0 to 300 / **95** / 1%]

014	Glossy:Weight 4
	[0 to 300 / **95** / 1%]
015	Glossy:Weight 5
	[0 to 300 / **95** / 1%]
016	Glossy:Weight 6
	[0 to 300 / **95** / 1%]
017	Glossy:Weight 7
	[0 to 300 / **95** / 1%]
022	Matte:Weight 2
	[0 to 300 / **95** / 1%]
023	Matte:Weight 3
	[0 to 300 / **95** / 1%]
024	Matte:Weight 4
	[0 to 300 / **95** / 1%]
025	Matte:Weight 5
	[0 to 300 / **95** / 1%]
026	Matte:Weight 6
	[0 to 300 / **95** / 1%]
027	Matte:Weight 7
	[0 to 300 / **95** / 1%]
075	Envelope:Weight 5
	[0 to 300 / **85** / 1%]
076	Envelope:Weight 6
	[0 to 300 / **85** / 1%]
077	Envelope:Weight 7
	[0 to 300 / **85** / 1%]

2858*	TEdge Length:Bk
2859*	TEdge Length:FC
001	Plain:Weight 1
	[0 to 30 / **5** / 1 mm]
002	Plain:Weight 2
	[0 to 30 / **5** / 1 mm]
003	Plain:Weight 3
	[0 to 30 / **5** / 1 mm]
004	Plain:Weight 4
	[0 to 30 / **5** / 1 mm]
005	Plain:Weight 5
	[0 to 30 / **5** / 1 mm]
006	Plain:Weight 6
	[0 to 30 / **5** / 1 mm]
007	Plain:Weight 7
	[0 to 30 / **5** / 1 mm]
012	Glossy:Weight 2
	[0 to 30 / **5** / 1 mm]
013	Glossy:Weight 3
	[0 to 30 / **5** / 1 mm]
014	Glossy:Weight 4
	[0 to 30 / **5** / 1 mm]
015	Glossy:Weight 5
	[0 to 30 / **5** / 1 mm]
016	Glossy:Weight 6
	[0 to 30 / **5** / 1 mm]

017	Glossy:Weight 7
	[0 to 30 / **5** / 1 mm]
022	Matte:Weight 2
	[0 to 30 / **5** / 1 mm]
023	Matte:Weight 3
	[0 to 30 / **5** / 1 mm]
024	Matte:Weight 4
	[0 to 30 / **5** / 1 mm]
025	Matte:Weight 5
	[0 to 30 / **5** / 1 mm]
026	Matte:Weight 6
	[0 to 30 / **5** / 1 mm]
027	Matte:Weight 7
	[0 to 30 / **5** / 1 mm]
075	Envelope:Weight 5
	[0 to 30 / **5** / 1 mm]
076	Envelope:Weight 6
	[0 to 30 / **5** / 1 mm]
077	Envelope:Weight 7
	[0 to 30 / **5** / 1 mm]

2880*	PTR Speed Control
001	Plain:Weight 1
	[-1 to 1 / **0** / 0.1%]
002	Plain:Weight 2
	[-1 to 1 / **0** / 0.1%]

003	Plain:Weight 3
	[-1 to 1 / **0** / 0.1%]
004	Plain:Weight 4
	[-1 to 1 / **-0.2** / 0.1%]
005	Plain:Weight 5
	[-1 to 1 / **-0.2** / 0.1%]
006	Plain:Weight 6
	[-1 to 1 / **-0.2** / 0.1%]
007	Plain:Weight 7
	[-1 to 1 / **-0.2** / 0.1%]
012	Glossy:Weight 2
	[-1 to 1 / **0** / 0.1%]
013	Glossy:Weight 3
	[-1 to 1 / **0** / 0.1%]
014	Glossy:Weight 4
	[-1 to 1 / **-0.2** / 0.1%]
015	Glossy:Weight 5
	[-1 to 1 / **-0.2** / 0.1%]
016	Glossy:Weight 6
	[-1 to 1 / **-0.2** / 0.1%]
017	Glossy:Weight 7
	[-1 to 1 / **-0.2** / 0.1%]
022	Matte:Weight 2
	[-1 to 1 / **0** / 0.1%]
023	Matte:Weight 3
	[-1 to 1 / **0** / 0.1%]

024	Matte:Weight 4
	[-1 to 1 / **-0.2** / 0.1%]
025	Matte:Weight 5
	[-1 to 1 / **-0.2** / 0.1%]
026	Matte:Weight 6
	[-1 to 1 / **-0.2** / 0.1%]
027	Matte:Weight 7
	[-1 to 1 / **-0.2** / 0.1%]
075	Envelope:Weight 5
	[-1 to 1 / **-0.2** / 0.1%]
076	Envelope:Weight 6
	[-1 to 1 / **-0.2** / 0.1%]
077	Envelope:Weight 7
	[-1 to 1 / **-0.2** / 0.1%]

2901	Disp T/H Sn:K
001	Humid:Recent
	[0 to 100 / **0** / 1°C]
002	Rel Humid:Recent
	[0 to 100 / **0** / 1%RH]
003	Abs Humid:Recent
	[0 to 100 / **0** / 0.01 g/m^3]
004	Environ:Recent
	DFU
005*	Temp:Prev
	[0 to 100 / **0** / 1°C]

006*	Rel Humid:Prev
	[0 to 100 / **0** / 1%RH]
007*	Abd Humid:Prev
	[0 to 100 / **0** / 0.01 g/m^3]
008*	Environ:Prev
	DFU

2902	SBU Test Pattern **(D095 only)**
004	Select Test Pattern
	Selects the test pattern of SBU. [0 to 4 / **0** / 1] 0: Normal Scanner output 1: Fixed Value Output (adjustable with SP2902-005) 2: Main Scan Grayscale Output 3: Sub Scan Grayscale Output 4: Grid Output
005	Set Output Level
	Specifies the output level for the SBU test pattern. This can be activated only when the setting of SP2902-004 is set to "1". [0 to 1023 / **512** / 1]

2904*	ITB Motor Setting **DFU**
001	Reverse Amt
	[0 to 2000 / **0** / 1 step]

2905*	Waste Toner Full Sn **SSP**

001	Toner Volume
	Specifies the maximum toner amount for the machine operating after the waste tone full sensor has detected the full condition of the waste toner bottle. [0 to 1000 / **0** / 10 g]
002	N Pgs
	Specifies the maximum number of pages for the machine operating after the waste tone full sensor has detected the full condition of the waste toner bottle. [0 to 1000 / **0** / 10 pages]

2907*	ACS Switch Set:FC Mode
001	Cont Bk Image N Sheets
	[0 to 10 / **0** / 1 sheet]
002	BW Select (0:Normal/1:High Prod)
	[0 or 1 / **0** / 1] 0: Normal ACS, 1: No ACS
010	Mode FC Fixed Boot
	[0 or 1 / **0** / 1] 0: Enable, 1: Disable

2908*	Process Interval **DFU**
010	Additional Time
	[0 to 8 / **1.3** / 0.1 sec]
011	Extend JobEnd Prcn
	[0 to 99 / **0** / 1 sec]

2910*	Polygon Motor:Fine Adj
001	Back Reduction Set
	[0.1 to 0.5 / **0.5** / 0.1%]

2912*	Drum Motor Set **DFU**
001	Reverse Amt
	[0 to 2000 / **0** / 1 step]

2913*	PTR Mtr Setting **DFU**
001	Standard Rotation (90ppm)
	[1000 to 2000 / **1259.2** / 0.1 rpm]
002	Standard Rotation (70ppm)
	[1000 to 2000 / **979.4** / 0.1 rpm]

2915*	PTR Motor Environment Correction **DFU**
001	LLL
	[–1 to 1 / **0.1** / 0.1%]
002	LL
	[–1 to 1 / **0.1** / 0.1%]
003	ML
	[–1 to 1 / **0** / 0.1%]
004	MM
	[–1 to 1 / **0** / 0.1%]
005	MH
	[–1 to 1 / **-0.2** / 0.1%]
006	HH
	[–1 to1 / **-0.2** / 0.1%]

2916*	ITB Cleaning Motor Setting

001	Motor Rotation
	Specifies the rotation times of the ITB cleaning motor. [500 to 2000 / **1015.4** / 0.1 rpm]

2917*	PTB Motor Setting **DFU**
001	Speed Adjustment (90ppm)
	Adds or subtracts PTR timing roller speed for each paper type. (1 step = 0.2%) [–15 to 16 / **5** / -]
002	Speed Adjustment (70ppm)
	Adds or subtracts PTR timing roller speed for each paper type. (1 step = 0.2%) [–15 to 16 / **3** / -]

2920*	Belt Centering Roller
001	Current Position
	[–100 to 100 / **0** / 1 step]
002	Roller Position Detection
	Execute the ITB centering for each mode.
003	Roller Pos.: No-contact
	Displays the position of the belt centering roller when the ITB is away from the drums. [-100 to 100 / **0** / 1step]
004	Roller Position: Bk
	Displays the position of the belt centering roller at the B/W printing mode. [-100 to 100 / **0** / 1step]
005	Roller Position: Color
	Displays the position of the belt centering roller at the color printing mode. [-100 to 100 / **0** / 1step]

006	Roller Holding Setting
	Holds or does not hold the position of the belt centering roller when the ITB moves to the drums or away from the drums. [0 or 1 / **0** / 1] 0: Hold (5 seconds) 1: Does not hold

2921*	LD Off Check
001	Displays the LD status.
	[0 or 1 / **0** / 1] 0: LD On. 1: LD Off

2933*	high density mode
	Configures the settings of the drum idling mode for a multiple printing job.
001	density1
	Specifies the threshold coverage 1 for the drum idling mode. No drum idling mode is executed if the setting of this SP is set to "0" (default). [0 to 300 / **0** / 1%]
002	density2
	Specifies the threshold coverage 2 for the drum idling mode. No drum idling mode is executed if the setting of this SP is set to "0" (default). [0 to 300 / **0** / 1%]
003	speed1
	Specifies the additional motor speed 1 of the drum cleaning motor during the drum idling mode. [0 to 100 / **20** / 1%]
004	speed2
	Specifies the additional motor speed 1 of the drum cleaning motor during the drum idling mode. [0 to 100 / **20** / 1%]

005	sheets1
	Specifies the execution threshold 1 for the drum idling mode. No drum idling mode is executed if the setting of this SP is set to "0" (default). [0 to 2000 / **0** / 1 sheet]
006	sheets2
	Specifies the execution threshold 2 for the drum idling mode. No drum idling mode is executed if the setting of this SP is set to "0" (default). [0 to 2000 / **0** / 1 sheet]

4

2950*	PTR Bias:Bk
-001 to -100	Custom Paper 001 to 100
	Specifies the current of the paper transfer roller in BK printing for each customer paper setting. [-300 to 0 / **-65** / 1 μA]

2951*	PTR Bias:FC
-001 to -100	Custom Paper 001 to 100
	Specifies the current of the paper transfer roller in FC printing for each customer paper setting. [-300 to 0 / **-85** / 1 μA]

2952*	LEdge Coeff:Bk
-001 to -100	Custom Paper 001 to 100
	Specifies the leading edge bias correction of the paper transfer roller in Bk printing for each customer paper setting. [0 to 300 / **100** / 1%]

2953*	LEdge Coeff:FC

-001 to -100	Custom Paper 001 to 100
	Specifies the leading edge bias correction of the paper transfer roller in FC printing for each customer paper setting. [0 to 300 / **100** / 1%]

2954*	LEdge Length:Bk
-001 to -100	Custom Paper 001 to 100
	Specifies the leading edge switch timing of the paper transfer roller in Bk printing for each customer paper setting. [0 to 30 / **5** / 1 mm]

2955*	LEdge Length:FC
-001 to -100	Custom Paper 001 to 100
	Specifies the leading edge switch timing of the paper transfer roller in FC printing for each customer paper setting. [0 to 30 / **5** / 1 mm]

2956*	TEdge Coeff:Bk
-001 to -100	Custom Paper 001 to 100
	Specifies the trailing edge bias correction of the paper transfer roller in Bk printing for each customer paper setting. [0 to 300 / **100** / 1%]

2957*	TEdge Coeff:FC
-001 to -100	Custom Paper 001 to 100
	Specifies the trailing edge bias correction of the paper transfer roller in FC printing for each customer paper setting. [0 to 300 / **100** / 1%]

2958*	TEdge Length:Bk

-001 to -100	Custom Paper 001 to 100
	Specifies the trailing edge switch timing of the paper transfer roller in Bk printing for each customer paper setting. [0 to 30 / **5** / 1 mm]

2959*	TEdge Length:FC
-001 to -100	Custom Paper 001 to 100
	Specifies the trailing edge switch timing of the paper transfer roller in FC printing for each customer paper setting. [0 to 30 / **5** / 1 mm]

2962*	ITB:BK
-001 to -100	Custom Paper 001 to 100
	Specifies the current of the image transfer roller in Bk printing for each customer paper setting. [0 to 150 / **60** / 1 μA]

2963*	ITB:FC:Y
-001 to -100	Custom Paper 001 to 100
	Specifies the current of the image transfer roller Yellow in FC printing for each customer paper setting. [0 to 150 / **65** / 1 μA]

2964*	ITB:FC:M
-001 to -100	Custom Paper 001 to 100
	Specifies the current of the image transfer roller Magenta in FC printing for each customer paper setting. [0 to 150 / **65** / 1 μA]

2965*	ITB:FC:C

-001 to -100	Custom Paper 001 to 100
	Specifies the current of the image transfer roller Cyan in FC printing for each customer paper setting. [0 to 150 / **55** / 1 μA]

2966*	ITB:FC:K
-001 to -100	Custom Paper 001 to 100
	Specifies the current of the image transfer roller Black in FC printing for each customer paper setting. [0 to 150 / **60** / 1 μA]

2980*	PTR Speed Control
-001 to -100	Custom Paper 001 to 100
	Specifies the motor speed correction of the PTR motor for each customer paper setting. [-1 to 1 / **0** / 0.1%]

2986*	2nd Bias Coeff:BK
-001 to -100	Custom Paper 001 to 100
	Specifies the current coefficient of the paper transfer roller in Bk printing for the 2nd side of each customer paper. [0 to 200 / **100** / 1%]

2987*	2nd Bias Coeff:FC
-001 to -100	Custom Paper 001 to 100
	Specifies the current coefficient of the paper transfer roller in FC printing for the 2nd side of each customer paper. [0 to 200 / **100** / 1%]

System SP3-xxx: 1

SP3-xxx Process

3001*	ID Sn:Vt Display
001	Current Val:K
	[0 to 5 / **0** / 0.01V]
002	Current Val:C
	[0 to 5 / **0** / 0.01V]
003	Current Val:M
	[0 to 5 / **0** / 0.01V]
004	Current Val:Y
	[0 to 5 / **0** / 0.01V]
005	Target
	[0 to 5 / **3** / 0.01V]
006	Developer Threshold
	[0 to 5 / **0.5** / 0.01V]
007	Adjustable Range
	[0 to 5 / **0.2** / 0.01V]

3002*	Vtcnt:Disp/Set **DFU**
001	Current Val:K
	[0 to 12 / **6** / 0.01V]
002	Current Val:C
	[0 to 12 / **6** / 0.01V]
003	Current Val:M
	[0 to 12 / **6** / 0.01V]

004	Current Val:Y
	[0 to 12 / **6** / 0.01V]
005	Initial Val:K
	[0 to 12 / **6** / 0.01V]
006	Initial Val:C
	[0 to 12 / **6** / 0.01V]
007	Initial Val:M
	[0 to 12 / **6** / 0.01V]
008	Initial Val:Y
	[0 to 12 / **6** / 0.01V]
009	Developer Detection Set
	[0 to 1024 / **768** / 1]

3003*	Vtref:Disp/Set **DFU**
001	Current Val:K
	[0 to 5 / **2.5** / 0.01V]
002	Current Val:C
	[0 to 5 / **2.5** / 0.01V]
003	Current Val:M
	[0 to 5 / **2.5** / 0.01V]
004	Current Val:Y
	[0 to 5 / **2.5** / 0.01V]
005	Initial Val:K
	[0 to 5 / **2.5** / 0.01V]
006	Initial Val:C
	[0 to 5 / **2.5** / 0.01V]

007	Initial Val:M
	[0 to 5 / **2.5** / 0.01V]
008	Initial Val:Y
	[0 to 5 / **2.5** / 0.01V]

3004*	Vtref:Disp/Set **DFU**
001	Upper:K
	[0 to 5 / **3.8** / 0.01 V]
002	Upper:C
	[0 to 5 / **3.8** / 0.01 V]
003	Upper:M
	[0 to 5 / **3.8** / 0.01 V]
004	Upper:Y
	[0 to 5 / **3.8** / 0.01 V]
005	Lower:K
	[0 to 5 / **1.4** / 0.01 V]
006	Lower:C
	[0 to 5 / **1.4** / 0.01 V]
007	Lower:M
	[0 to 5 / **1.4** / 0.01 V]
008	Lower:Y
	[0 to 5 / **1.4** / 0.01 V]

3019*	TD.Sens Sensitivity
001	Std Speed:K
	[0.2 to 0.7 / **0.4** / 0.001 -V/wt%]

002	Std Speed:C
	[0.2 to 0.7 / **0.4** / 0.001 -V/wt%]
003	Std Speed:M
	[0.2 to 0.7 / **0.4** / 0.001 -V/wt%]
004	Std Speed:Y
	[0.2 to 0.7 / **0.4** / 0.001 -V/wt%]
005	Low Speed:K
	[0.2 to 0.7 / **0.4** / 0.001 -V/wt%]
006	Low Speed:C
	[0.2 to 0.7 / **0.4** / 0.001 -V/wt%]
007	Low Speed:M
	[0.2 to 0.7 / **0.4** / 0.001 -V/wt%]
008	Low Speed:Y
	[0.2 to 0.7 / **0.4** / 0.001 -V/wt%]

3020*	Vt Shift :Set
001	Low Spd:K
	[0 to 5 / **0.12** / 0.01 V]
002	Low Spd:C
	[0 to 5 / **0.12** / 0.01 V]
003	Low Spd:M
	[0 to 5 / **0.12** / 0.01 V]
004	Low Spd:Y
	[0 to 5 / **0.12** / 0.01 V]

3021*	TD SN Error Thresh

001	Average:Low TC
	[0 to 5 / **2.5** / 0.1V]
002	Average:High TC
	[0 to 5 / **1.5** / 0.1V]
003	Dev Rotation Thresh:Low TC
	[0 to 5 / **0** / 0.01V]
004	Dev Rotation Thresh:Mid TC
	[0 to 5 / **0** / 0.01V]
005	Dev Rotation Thresh:High TC
	[0 to 5 / **0** / 0.01V]

3022*	ID Sn Error Condition
	These displays error detected condition for each color. 1:HH, 2:MM, 3:LL
001	Thresh Condition:Bk
	[1 to 3 / **3** / 1]
002	Thresh Condition:C
	[1 to 3 / **3** / 1]
003	Thresh Condition:M
	[1 to 3 / **3** / 1]
004	Thresh Condition:Y
	[1 to 3 / **3** / 1]

3042*	Set Vtref Cor **DFU**
001	Vref Corr Mode
	[0 to 1 / **0** / 1] 0: Vfref Correction: ON, 1: Vfref Correction: OFF

002	Corr Amt(+):K
	[0 to 1 / **0.2** / 0.01V]
003	Corr Amt(+):C
	[0 to 1 / **0.2** / 0.01V]
004	Corr Amt(+):M
	[0 to 1 / **0.2** / 0.01V]
005	Corr Amt(+):Y
	[0 to 1 / **0.2** / 0.01V]
006	Corr Amt(-):K
	[0 to 1 / **0.2** / 0.01V]
007	Corr Amt(-):C
	[0 to 1 / **0.2** / 0.01V]
008	Corr Amt(-):M
	[0 to 1 / **0.2** / 0.01V]
009	Corr Amt(-):Y
	[0 to 1 / **0.2** / 0.01V]
010	Vref Corr Target:K
	[-0.1 to 0.1 / **0** / 0.001 mg/cm2]
011	Vref Corr Target:C
	[-0.1 to 0.1 / **0** / 0.001mg/cm2]
012	Vref Corr Target:M
	[-0.1 to 0.1 / **0** / 0.001mg/cm2]
013	Vref Corr Target:Y
	[-0.1 to 0.1 / **0** / 0.001mg/cm2]
014	Vref Corr Target:K
	[0 to 0.1 / **0.012** / 0.001mg/cm2]

015	Vref Corr Target:C
	[0 to 0.1 / **0.015** / 0.001mg/cm2]
016	Vref Corr Target:M
	[0 to 0.1 / **0.015** / 0.001mg/cm2]
017	Vref Corr Target:Y
	[0 to 0.1 / **0.015** / 0.001mg/cm2]

3044*	ImgArea
	These SP displays average coverage for each color. S: Average of 10 sheets, M: Average of 100 sheets
005	Ave.S:K
	[0 to 500 / **3** / 0.01%]
006	Ave.S:C
	[0 to 500 / **3** / 0.01%]
007	Ave.S:M
	[0 to 500 / **3** / 0.01%]
008	Ave.S:Y
	[0 to 500 / **3** / 0.01%]
009	Ave.M:K
	[0 to 500 / **3** / 0.01%]
010	Ave.M:C
	[0 to 500 / **3** / 0.01%]
011	Ave.M:M
	[0 to 500 / **3** / 0.01%]
012	Ave.M:Y
	[0 to 500 / **3** / 0.01%]

017	Set N Pgs Ave.:S
	[1 to 100 / **10** / 1sheet]
018	Set N Pgs Ave.:M
	[1 to 500 / **100** / 1sheet]

3101*	ID Pattern:Disp
001	Applied:K
	[0 to 2 / **0** / 0.001mg]
002	Applied:C
	[0 to 2 / **0** / 0.001mg]
003	Applied:M
	[0 to 2 / **0** / 0.001mg]
004	Applied:Y
	[0 to 2 / **0** / 0.001mg]

3111*	ID Sn:Voffset **DFU**
001	Voffset_Reg:Col_C
	[0 to 5 / **0** / 0.01V]
002	Voffset_Dif:Col_C
	[0 to 5 / **0** / 0.01V]
003	Voffset_Reg:Col_M
	[0 to 5 / **0** / 0.01V]
004	Voffset_Dif:Col_M
	[0 to 5 / **0** / 0.01V]
005	Voffset_Reg:Col_Y
	[0 to 5 / **0** / 0.01V]

006	Voffset_Dif:Col_Y
	[0 to 5 / **0** / 0.01V]
007	Voffset_Reg:K:Last
	[0 to 5 / **0** / 0.01V]

3121*	Adjusted Vsg
001	Vsg_Reg:Col_C:Las
	[0 to 5 / **0** / 0.01V]
002	Vsg_Dif:Col_C:Last
	[0 to 5 / **0** / 0.01V]
003	Vsg_Reg:Col_M:Last
	[0 to 5 / **0** / 0.01V]
004	Vsg_Dif:Col_M:Last
	[0 to 5 / **0** / 0.01V]
005	Vsg_Reg:Col_Y:Last
	[0 to 5 / **0** / 0.01V]
006	Vsg_Dif:Col_Y:Last
	[0 to 5 / **0** / 0.01V]
007	Vsg_Reg:K:Last
	[0 to 5 / **0** / 0.01V]

3122*	Vsg_reg
001	TM_F(Ctr:MAX)
	[0 to 5 / **0** / 0.01V]
002	TM_F(Ctr:min)
	[0 to 5 / **0** / 0.01V]

003	TM_C(Ctr:MAX)
	[0 to 5 / **0** / 0.01V]
004	TM_C(Ctr:min)
	[0 to 5 / **0** / 0.01V]
005	TM_R(Ctr:MAX)
	[0 to 5 / **0** / 0.01V]
006	TM_R(Ctr:min)
	[0 to 5 / **0** / 0.01V]
007	K(Ctr:MAX)
	[0 to 5 / **0** / 0.01V]
008	K(Ctr:min)
	[0 to 5 / **0** / 0.01V]
009	C(Ctr:MAX)
	[0 to 5 / **0** / 0.01V]
010	C(Ctr:min)
	[0 to 5 / **0** / 0.01V]
011	M(Ctr:MAX)
	[0 to 5 / **0** / 0.01V]
012	M(Ctr:min)
	[0 to 5 / **0** / 0.01V]
013	Y(Ctr:MAX)
	[0 to 5 / **0** / 0.01V]
014	Y(Ctr:min)
	[0 to 5 / **0** / 0.01V]
015	TM_F(Ini:MAX)
	[0 to 5 / **0** / 0.01V]

016	TM_F(Ini:min)
	[0 to 5 / **0** / 0.01V]
017	TM_C(Ini:MAX)
	[0 to 5 / **0** / 0.01V]
018	TM_C(Ini:min)
	[0 to 5 / **0** / 0.01V]
019	TM_R(Ini:MAX)
	[0 to 5 / **0** / 0.01V]
020	TM_R(Ini:min)
	[0 to 5 / **0** / 0.01V]
021	K(Ini:MAX)
	[0 to 5 / **0** / 0.01V]
022	K(Ini:min)
	[0 to 5 / **0** / 0.01V]
023	C(Ini:MAX)
	[0 to 5 / **0** / 0.01V]
024	C(Ini:min)
	[0 to 5 / **0** / 0.01V]
025	M(Ini:MAX)
	[0 to 5 / **0** / 0.01V]
026	M(Ini:min)
	[0 to 5 / **0** / 0.01V]
027	Y(Ini:MAX)
	[0 to 5 / **0** / 0.01V]
028	Y(Ini:min)
	[0 to 5 / **0** / 0.01V]

3131*	Ifsg After Vsg
001	Ifsg:K:Last
	[0 to 4096 / **0** / 1]
002	Ifsg:Col_C:Last
	[0 to 4096 / **0** / 1]
003	Ifsg:Col_M:Last
	[0 to 4096 / **0** / 1]
004	Ifsg:Col_Y:Last
	[0 to 4096 / **0** / 1]
005	Vsg K:min
	[0 to 4096 / **1000** / 1]
006	Vsg C:min
	[0 to 4096 / **1000** / 1]
007	Vsg M:min
	[0 to 4096 / **1000** / 1]
008	Vsg Y:min
	[0 to 4096 / **1000** / 1]

3141*	ID Sn:Vmin **DFU**
004	Vmin:K(Rear)
	[0 to 5 / **0** / 0.01V]

3161*	ID Pattern Setting:Paper Int
001	Target Toner Amt:K
	[0 to 2 / **0.32** / 0.001mg/mc^2]

3171*	ID Pattern:Int

001	Create Int
	[0 to 200 / **10** / 1sheets]
002	Sheets counter
	[0 to 200 / **10** / 1sheets]

3194*	ID Coeff Display
001	K2:Col_C:Last
	[0 to 5 / **1** / 0.0001]
002	K5:Col_C:Last
	[0 to 5 / **2.3** / 0.0001]
003	K2:Col_M:Last
	[0 to 5 / **1** / 0.0001]
004	K5:Col_M:Last
	[0 to 5 / **2.3** / 0.0001]
005	K2:Col_Y:Last
	[0 to 5 / **1** / 0.0001]
006	K5:Col_Y:Last
	[0 to 5 / **2.3** / 0.0001]

3251*	Tnr Supply Time
	Displays the total toner supply time for each color.
001	Sub Hopper CL:K
	[0 to 99999999 / **0** / 1msec]
002	Sub Hopper CL:C
	[0 to 99999999 / **0** / 1msec]
003	Sub Hopper CL:M
	[0 to 99999999 / **0** / 1msec]

004	Sub Hopper CL:Y
	[0 to 99999999 / **0** / 1msec]
005	Toner Pump CL:K
	[0 to 5000 / **0** / 1s]
006	Toner Pump CL:C
	[0 to 5000 / **0** / 1s]
007	Toner Pump CL:M
	[0 to 5000 / **0** / 1s]
008	Toner Pump CL:Y
	[0 to 5000 / **0** / 1s]

3253*	Toner Pump Fill Amt **DFU**
001	K:Remain Level1
	[0 to 5 / **1.96** / 0.01g/s]
002	K:Remain Level2
	[0 to 5 / **1.8** / 0.01g/s]
003	K:Remain Level3
	[0 to 5 / **1.78** / 0.01g/s]
004	K:Remain Level4
	[0 to 5 / **1.71** / 0.01g/s]
005	C:Remain Level1
	[0 to 5 / **1.96** / 0.01g/s]
006	C:Remain Level2
	[0 to 5 / **1.8** / 0.01g/s]
007	C:Remain Level3
	[0 to 5 / **1.78** / 0.01g/s]

008	C:Remain Level4
	[0 to 5 / **1.71** / 0.01g/s]
009	M:Remain Level1
	[0 to 5 / **1.96** / 0.01g/s]
010	M:Remain Level2
	[0 to 5 / **1.8** / 0.01g/s]
011	M:Remain Level3
	[0 to 5 / **1.78** / 0.01g/s]
012	M:Remain Level3
	[0 to 5 / **1.71** / 0.01g/s]
013	Y:Remain Level1
	[0 to 5 / **1.82** / 0.01g/s]
014	Y:Remain Level2
	[0 to 5 / **1.65** / 0.01g/s]
015	Y:Remain Level3
	[0 to 5 / **1.62** / 0.01g/s]
016	Y:Remain Level4
	[0 to 5 / **1.58** / 0.01g/s]

3301*	Tnr Supply **DFU**
001	K
	[0 to 1 / **0** / 1] 0: PID, 1: No Toner Supply
002	C
	[0 to 1 / **0** / 1] 0: PID, 1: No Toner Supply

003	M
	[0 to 1 / **0** / 1] 0: PID, 1: No Toner Supply
004	Y
	[0 to 1 / **0** / 1] 0: PID, 1: No Toner Supply

3303*	Tnr Supply Rate
001	Last Val:K
	[0 to 100 / **0** / 1%]
002	Last Val:C
	[0 to 100 / **0** / 1%]
003	Last Val:M
	[0 to 100 / **0** / 1%]
004	Last Val:Y
	[0 to 100 / **0** / 1%]

3304*	Tnr SupplyLimits **DFU**
001	Max Supply Rate:K
	[0 to 150 / **95** / 1%]
002	Max Supply Rate:C
	[0 to 150 / **105** / 1%]
003	Max Supply Rate:M
	[0 to 150 / **110** / 1%]
004	Max Supply Rate:Y
	[0 to 150 / **120** / 1%]

005	Min Supply Time:K
	[0 to 1000 / **75** / 1msec]
006	Min Supply Time:C
	[0 to 1000 / **75** / 1msec]]
007	Min Supply Time:M
	[0 to 1000 / **75** / 1msec]
008	Min Supply Time:Y
	[0 to 1000 / **75** / 1msec]
009	High Cov:Supply Max Rate:K
	[0 to 150 / **90** / 1%]
010	High Cov:Supply Max Rate:C
	[0 to 150 / **100** / 1%]
011	High Cov:Supply Max Rate:M
	[0 to 150 / **105** / 1%]
012	High Cov:Supply Max Rate:Y
	[0 to 150 / **115** / 1%]

3305*	ID Sensor Coefficient **DFU**
001	Image Coverage Rate 1
	[0 to 2 / **0.4** / 0.1]
002	Image Coverage Rate 2
	[0 to 2 / **0.6** / 0.1]
003	Image Coverage Rate 3
	[0 to 2 / **0.8** / 0.1]
004	Image Coverage Rate 4
	[0 to 2 / **0.9** / 0.1]

3306*	Tnr Supply Coeff **DFU**
001	Ratio Coeff1:K
	[0 to 4300 / **400** / 1]
002	Ratio Coeff1:C
	[0 to 4300 / **400** / 1]
003	Ratio Coeff1:M
	[0 to 4300 / **400** / 1]
004	Ratio Coeff1:Y
	[0 to 4300 / **400** / 1]
021	P_Vt_Coeff:K
	[0 to 100 / **25** / 1%]
022	P_Vt_Coeff:C
	[0 to 100 / **25** / 1%]
023	P_Vt_Coeff:M
	[0 to 100 / **25** / 1%]
024	P_Vt_Coeff:Y
	[0 to 100 / **25** / 1%]
025	I_VtCoef:K
	[0 to 10000 / **0** / 1]
026	I_VtCoef:C
	[0 to 10000 / **0** / 1]
027	I_VtCoef:M
	[0 to 10000 / **0** / 1]
028	I_VtCoef:Y
	[0 to 10000 / **0** / 1]

033	P_Px1_Coeff1:K
	[0 to 150 / **85** / 1%]
034	P_Px1_Coeff1:C
	[0 to 150 / **95** / 1%]
035	P_Px1_Coeff1:M
	[0 to 150 / **100** / 1%]
036	P_Px1_Coeff1:Y
	[0 to 150 / **110** / 1%]
037	P_PxlCoef2:K
	[0 to 2.55 / **1** / 0.01]
038	P_PxlCoef2:C
	[0 to 2.55 / **1** / 0.01]
039	P_PxlCoef2:M
	[0 to 2.55 / **1** / 0.01]
040	P_PxlCoef2:Y
	[0 to 2.55 / **1** / 0.01]
041	P_PxlCoef3:K
	[0 to 2.55 / **1** / 0.01]
042	P_PxlCoef3:C
	[0 to 2.55 / **1** / 0.01]
043	P_PxlCoef3:M
	[0 to 2.55 / **1** / 0.01]
044	P_PxlCoef3:Y
	[0 to 2.55 / **1** / 0.01]

3308*	Interval mode

001	Execute page
	Specifies the threshold pages for the interval mode. This SP can be activated only when the setting of the idling time (SP3308-002) is set to a value more than "0". [0 to 2000 / **0** / 1 page] Use this SP to prevent the vertical white line problem caused by multiple printing.
002	Idling time
	Specifies the idling time for the interval mode. This SP can be activated only when the setting of the execute page (SP3308-001) is set to a value more than "0". [0 to 1000 / **0** / 1 sec.]

3310*	Next Tnr Supply
	Displays the next toner supply amount for each color.
001	K Amount
	[0 to 65535 / **0** / 1mg]
002	C Amount
	[0 to 65535 / **0** / 1mg]
003	M Amount
	[0 to 65535 / **0** / 1mg]
004	Y Amount
	[0 to 65535 / **0** / 1mg]
005	K Image Area
	[0 to 65535 / **0** / 1cm2]
006	C Image Area
	[0 to 65535 / **0** / 1cm2]
007	M Image Area
	[0 to 65535 / **0** / 1cm2]

008	Y Image Area
	[0 to 65535 / **0** / 1cm2]
009	K Wait Time
	[0 to 65535 / **0** / 1msec]
010	C Wait Time
	[0 to 65535 / **0** / 1msec]
011	M Wait Time
	[0 to 65535 / **0** / 1msec]
012	Y Wait Time
	[0 to 65535 / **0** / 1msec]

3311*	Low Process DEV exhaust mode
	Displays the activation time of the toner pump clutch in the low speed printing for each color.
001	Mohno clutch On time:K
	[0 to 9999999 / - / 1 msec.]
002	Mohno clutch On time:M
	[0 to 9999999 / - / 1 msec.]
003	Mohno clutch On time:C
	[0 to 9999999 / - / 1 msec.]
004	Mohno clutch On time:Y
	[0 to 9999999 / - / 1 msec.]

3362*	ID Sensor Sensitivity: Setting **DFU**
001	K2: Upper
	[0 to 1 / **0.32** / 0.01]

002	K2: Lower
	[0 to 1 / **0.22** / 0.01]
003	K5: Upper
	[0 to 10 / **5** / 0.01]
004	K5: Lower
	[0 to 1 / **0.5** / 0.01]
005	Kn: Upper
	[0 to 1 / **0.1** / 0.01]
006	Kn: Lower
	[0 to 1 / **0.9** / 0.01]
007	K5 Edit Point
	[0 to 1 / **0.15** / 0.01]
008	K5 Target Voltage
	[0 to 5 / **1.63** / 0.01]
010	K2: Upper/Lower Limit Coefficient 1
	[0 to 1 / **0** / 0.01]
011	K2: Upper Limit Correction
	[-0.2 to 0.4 / **0.07** / 0.01]
012	K2: Lower Limit Correction
	[-0.4 to 0.2 / **-0.07** / 0.01]
013	Diffusion Correction: C
	[0.75 to 1.35 / **1** / 0.01]
014	Diffusion Correction: M
	[0.75 to 1.35 / **1** / 0.01]
015	Diffusion Correction: Y
	[0.75 to 1.35 / **1** / 0.01]

016	K2: Check: C
	[0 to 1 / **0.25** / 0.001]
017	K2: Check: M
	[0 to 1 / **0.25** / 0.001]
018	K2: Check: Y
	[0 to 1 / **0.25** / 0.001]

3371*	M/A Calculation **DFU**
002	Correction Coefficient: C
	[0.5 to 2 / **1** / 0.01]
003	Correction Coefficient: M
	[0.5 to 2 / **1** / 0.01]
004	Correction Coefficient: Y
	[0.5 to 2 / **1** / 0.01]

3410*	Toner Bottle Info
	Displays the toner bottle information for each color. 0: End, 1: Near end, 2: Cover open, 3: Cover close, 4: Near end recovery, 10: Full
001	Condition:K
	[0 to 10 / **10** / 1]
002	Condition:C
	[0 to 10 / **10** / 1]
003	Condition:M
	[0 to 10 / **10** / 1]
004	Condition:Y
	[0 to 10 / **10** / 1]

005	Remain Toner:K
	[0 to 4000 / **-** / 0.01]
006	Remain Toner:C
	[0 to 4000 / **-** / 0.01]
007	Remain Toner:M
	[0 to 4000 / **-** / 0.01]
008	Remain Toner:Y
	[0 to 4000 / **-** / 0.01]

3411*	TNE Detect:Disp/Set
001	TNE:Threshold:K
	[0 to 30 / **3** / 1]
002	TNE:Threshold:Col
	[0 to 30 / **3** / 1]
003	TNE:Pg Count:K
	[0 to 99 / **0** / 1]
004	TNE:Pg Count:C
	[0 to 99 / **0** / 1]
005	TNE:Pg Count:M
	[[0 to 99 / **0** / 1]
006	TNE:Pg Count:Y
	[0 to 99 / **0** / 1]
007	TNE:Start-up Thresh:K
	[0 to 4000 / **150** / 1]
008	TNE:Start-up Thresh:Col
	[0 to 4000 / **150** / 1]

System SP3-xxx: 2

3412*	TE Detect:Disp/Set
001	TE:Pg Thresh:Min:K
	[0 to 1000 / **10** / 1]
002	TE:Pg Thresh:Min:Col
	[0 to 1000 / **10** / 1]
003	TE:Pg Thresh:Max:K
	[0 to 10000 / **4000** / 1]
004	TE:Pg Thresh:Max:Col
	[0 to 10000 / **4000** / 1]
005	TE:Pixel Thresh:K
	[0 to 1000 / **200** / 1]
006	TE:Pixel Thresh:Col
	[0 to 1000 / **200** / 1]
007	TE:Supply Thresh:K
	[0 to 200 / **32** / 1s]
008	TE:Supply Thresh:Col
	[0 to 200 / **32** / 1s]
009	TE:Pg Count:K
	[0 to 10000 / **0** / 1]
010	TE:Pg Count:C
	[0 to 10000 / **0** / 1]
011	TE:Pg Count:M
	[0 to 10000 / **0** / 1]

012	TE:Pg Count:Y
	[0 to 10000 / **0** / 1]
013	TE:Pixel Count:K
	[0 to 1000000 / **0** / 1 cm^2]
014	TE:Pixel Count:C
	[0 to 1000000 / **0** / 1 cm^2]
015	TE:Pixel Count:M
	[0 to 1000000 / **0** / 1 cm^2]
016	TE:Pixel Count:Y
	[0 to 1000000 / **0** / 1 cm^2]
017	TE:Supply Count:K
	[0 to 200000 / **0** / 1 ms]
018	TE:Supply Count:C
	[0 to 200000 / **0** / 1 ms]
019	TE:Supply Count:M
	[0 to 200000 / **0** / 1 ms]
020	TE:Supply Count:Y
	[0 to 200000 / **0** / 1 ms]

3413*	Toner End Recovery
001	Toner Pump U-Limit:K
	[0 to 200 / **50** / 1 s]
002	Toner Pump U-Limit:Col
	[0 to 200 / **50** / 1 s]

3414*	Toner End Recovery

001	Error Thresh:K
	[0 to 50 / **20** / 1]
002	Error Supply:Col
	[0 to 50 / **20** / 1]

3415*	Restoration Toner Filling
001	Start Count
	Specifies the counter threshold of the toner near end for entering the CPM down mode. [0 to 40 / **15** / 1]
002	CPM
	Specifies the CPM down rate to compensate for the toner near end. [0 to 100 / **50** / 1%]

3501*	Select ProCon **DFU**
001	Recov Min:Col
	[0 to 1 / **0** / 1] 0: Process Control: ON, 1: Process Control: OFF
002	Before Job
	[0 to 1 / **0** / 1] 0: OFF, 1: ON
003	Density Adj Mode
	[0 to 3 / **1** / 1] 0: OFF, 1: 1st Power On, 2: 1st Power On & Job End, 3: All Process Control
004	ACC Before ProCon
	[0 to 2 / **2** / 1] 0: OFF, 1: ON, 2: Toner Density Adjust.

005	DnstyAdjTimes
	[1 to 10 / **10** / 1]
006	DevGamma(EnvCorrct)
	[0 to 1 / **0** / 1] 0: Environmental Correct: ON, 1: Environmental Correct: OFF
007	DevGamma(TimeCorrct)
	[0 to 1 / **0** / 1] 0: Time Correct. ON, 1: Time Correct OFF
008	Control Selection
	[0 to 1 / **1** / 1] 0: Special mode on, 1: Special mode off
009	Dev Gamma Adjustment
	[0 to 1 / **0** / 1] 0: Dev. Gamma Tc: ON, 1: Dev. Gamma Tc: OFF
010	Paper Intvl Corr Amt
	[0 to 1 / **1** / 1] 0: Page Interval: ON, 1: Page Interval: OFF

3511*	Poten Tbl:Disp **DFU**
001	Value:K
	[1 to 99 / **10** / 1]
002	Value:C
	[1 to 99 / **10** / 1]
003	Value:M
	[1 to 99 / **10** / 1]
004	Value:Y
	[1 to 99 / **10** / 1]

005	Target:K
	[1 to 99 / **10** / 1]
006	Target:C
	[1 to 99 / **10** / 1]
007	Target:M
	[1 to 99 / **10** / 1]
008	Target:Y
	[1 to 99 / **10** / 1]

3531*	ProCon Target
001	Max Tnr Amt:K
	[0 to 1 / **0.476** / 0.01 mg/cm^2]
002	Max Tnr Amt:C
	[0 to 1 / **0.476** / 0.01 mg/cm^2]
003	Max Tnr Amt:M
	[0 to 1 / **0.476** / 0.01 mg/cm^2]
004	Max Tnr Amt:Y
	[0 to 1 / **0.476** / 0.01 mg/cm^2]
005	Max M/A Adj.:K
	[-5 to 5 / **0** / 1]
006	Max M/A Adj.:C
	[-5 to 5 / **0** / 1]
007	Max M/A Adj.:M
	[-5 to 5 / **0** / 1]
008	Max M/A Adj.:Y
	[-5 to 5 / **0** / 1]

009	Line Width Adj.:K
	[-5 to 5 / **0** / 1]
010	Line Width Adj.:C
	[-5 to 5 / **0** / 1]
011	Line Width Adj.:M
	[-5 to 5 / **0** / 1]
012	Line Width Adj.:Y
	[-5 to 5 / **0** / 1]

3551*	Set Procon:Job End
	Adjusts the timing of Job End process control.
001	B/W Mode
	[0 to 9999/ **0** / 1sheet]
002	Color Mode
	[0 to 9999/ **2000** / 1sheet]
003	Pg Cnt:B&W Mode
	[0 to 9999/ **0** / 1sheet]
004	Pg CntColor Mode
	[0 to 9999/ **0** / 1mai]

3554*	Init ProCon Set
	Adjusts the timing of Initial process control.
001	Fusing Temperature Thresh
	[0 to 230 / **100** / 1deg]
002	Non-use Time Setting
	[0 to 1440 / **240** / 1 minute]

003	Temperature Range
	[0 to 99 / **10** / 1deg]
004	Relative Humidity Range
	[0 to 99 / **50** / 1%RH]
005	Absolute Humidity Range
	[0 to 99 / **6** / 1g/m^3]
006	Stirring extension ON/OFF
	Turns on or off the extension rotation of the development unit at the process control after power-on. [0 or 1 / **0** / -] 0: Off, 1: On (SP3554-007)
007	Stirring extension time
	Specifies the extension rotation time of the development unit at the process control after power-on. [1 to 900 / **360** / 1 sec.]

3555*	Before Job Procon
	These SPs are designed to correct the change of the toner density between the executions of the normal process control.
001	Short Idle Time ON/ OFF
	Turns on or off the process control for a short idle time. The idle time (threshold for the process control) of the machine can be adjusted with SP3555-002. [0 or 1 / **1** / 1] 0: On, 1: Off
002	Idling Time
	Specifies the threshold time of the process control for a short idle time. [0 to 999 / **20** / 1min]

003	Temperature Range ON/ OFF
	Turns on or off the process control for the temperature change inside the machine. The temperature change (threshold for the process control) of the machine can be adjusted with SP3555-004. [0 or 1 / **0** / 1] 0: On, 1: Off
004	Temperature Range
	Specifies the threshold temperature of the process control for the temperature change inside the machine [0 to 99 / **2** / 1°C]

3556*	Last Image Process Time
001	Year
	[0 to 9999 / **0** / 1]
002	Month
	[1 to 12 / **1** / 1]
003	Day
	[1 to 31 / **1** / 1]
004	Hour
	[0 to 23 / **0** / 1]
005	Minute
	[0 to 59 / **0** / 1]

3560	Developer Status
001	Weight%: Bk
	[0 to 15 / **0** / 0.01 wt%]
002	Weight%: C
	[0 to 15 / **0** / 0.01 wt%]

003	Weight%: M
	[0 to 15 / **0** / 0.01 wt%]
004	Weight%: Y
	[0 to 15 / **0** / 0.01 wt%]
005	Charge/g: Bk
	[0 to 50 / **0** / -0.1 μC/g]
006	Charge/g: C
	[0 to 50 / **0** / -0.1 μC/g]
007	Charge/g: M
	[0 to 50 / **0** / -0.1 μC/g]
008	Charge/g: Y
	[0 to 50 / **0** / -0.1 μC/g]

3561	Dev gamma:Disp/Set **DFU**
001	Actual Val:K
	[0 to 6 / **0** / 0.01]
002	Actual Val:C
	[0 to 6 / **0** / 0.01]
003	Actual Val:M
	[0 to 6 / **0** / 0.01]
004	Actual Val:Y
	[0 to 6 / **0** / 0.01]
005*	Target Val:K
	[0 to 6 / **1.5** / 0.01]
006*	Target Val:C
	[0 to 6 / **1.5** / 0.01]

007*	Target Val:M
	[0 to 6 / **1.5** / 0.01]
008*	Target Val:Y
	[0 to 6 / **1.5** / 0.01]
009*	Initial Val:K
	[0 to 6 / **1.5** / 0.01]
010*	Initial Val:C
	[0 to 6 / **1.5** / 0.01]
011*	Initial Val:M
	[0 to 6 / **1.5** / 0.01]
012*	Initial Val:Y
	[0 to 6 / **1.5** / 0.01]
031*	Environ Corr1:K
	[-5 to 5 / **-0.2** / 0.01]
032*	Environ Corr2:K
	[-5 to 5 / **-0.1** / 0.01]
033*	Environ Corr3:K
	[-5 to 5 / **0** / 0.01]
034*	Environ Corr4:K
	[-5 to 5 / **0** / 0.01]
035*	Environ Corr5:K
	[-5 to 5 / **0.12** / 0.01]
036*	Environ Corr6:K
	[-5 to 5 / **0.24** / 0.01]
037*	Environ Corr7:K
	[-5 to 5 / **0.3** / 0.01]

038*	Environ Corr8:K
	[-5 to 5 / **0.35** / 0.01]
039*	Environ Corr1:Col
	[-5 to 5 / **-0.2** / 0.01]
040*	Environ Corr2:Col
	[-5 to 5 / **-0.1** / 0.01]
041*	Environ Corr3:Col
	[-5 to 5 / **0** / 0.01]
042*	Environ Corr4:Col
	[-5 to 5 / **0** / 0.01]
043*	Environ Corr5:Col
	[-5 to 5 / **0.12** / 0.01]
044*	Environ Corr6:Col
	[-5 to 5 / **0.24** / 0.01]
045*	Environ Corr7:Col
	[-5 to 5 / **0.3** / 0.01]
046*	Environ Corr8:Col
	[-5 to 5 / **0.35** / 0.01]
060	TimeLapse corr:DEV Consume1
	[0 to 9999 / **10** / 1 KP]
061	TimeLapse corr:DEV Consume2
	[0 to 9999 / **100** / 1 KP]
070	TimeLapse corr1:Bk
	[-5 to 5 / **0.1** / 0.01]
071	TimeLapse corr2:Bk
	[-5 to 5 / **0** / 0.01]

072	TimeLapse corr3:Bk
	[-5 to 5 / **-0.1** / 0.01]
073	TimeLapse corr1:Color
	[-5 to 5 / **0.05** / 0.01]
074	TimeLapse corr2: Color
	[-5 to 5 / **-0.05** / 0.01]
075	TimeLapse corr3: Color
	[-5 to 5 / **-0.15** / 0.01]

3562	Display Vk **DFU**
001	K
	[-300 to 300 / **0** / 1V]
002	C
	[-300 to 300 / **0** / 1V]
003	M
	[-300 to 300 / **0** / 1V]
004	Y
	[-300 to 300 / **0** / 1V]

3563	Display Vr: **DFU**
001	K
	[-999 to 0 / **0** / 1V]
002	C
	[-999 to 0 / **0** / 1V]
003	M
	[-999 to 0 / **0** / 1V]

004	Y
	[-999 to 0 / **0**/ 1V]

3564	Display VL
001	K
	[-999 to 0 / **0** / 1V]
002	C
	[-999 to 0 / **0**/ 1V]
003	M
	[-999 to 0 / **0** / 1V]
004	Y
	[-999 to 0 / **0** / 1V]

3565	Display VpL
001	K
	[-999 to 0 / **0** / 1V]
002	C
	[-999 to 0 / **0** / 1V]
003	M
	[-999 to 0 / **0** / 1V]
004	Y
	[-999 to 0 / **0** / 1V]

3566	Display Vd
001	K
	[-999 to 0 / **0** / 1V]

002	C
	[-999 to 0 / **0** / 1V]
003	M
	[-999 to 0 / **0** / 1V]
004	Y
	[-999 to 0 / **0** / 1V]

3567	Display DEV Speed
001	K
	[700 to 1500 / **1038.6** / 0.1rpm]
002	C
	[700 to 1500 / **1038.6** / 0.1rpm]
003	M
	[700 to 1500 / **1038.6** / 0.1rpm]
004	Y
	[700 to 1500 / **1038.6** / 0.1rpm]

3572	Display VdHome **DFU**
001	K
	[-999 to 0 / **0** / 1V]
002	C
	[-999 to 0 / **0** / 1V]
003	M
	[-999 to 0 / **0** / 1V]
004	Y
	[-999 to 0 / **0** / 1V]

005	K:Ctr MAX
	[-999 to 0 / **0** / 1V]
006	K:Ctr min
	[-999 to 0 / **0** / 1V]
007	C:Ctr MAX
	[-999 to 0 / **0** / 1V]
008	C:Ctr min
	[-999 to 0 / **0** / 1V]
009	M:Ctr MAX
	[-999 to 0 / **0** / 1V]
010	M:Ctr min
	[-999 to 0 / **0** / 1V]
011	Y:Ctr MAX
	[-999 to 0 / **0** / 1V]
012	Y:Ctr min
	[-999 to 0 / **0** / 1V]
013	K:Ini MAX
	[-999 to 0 / **0** / 1V]
014	K:Ini min
	[-999 to 0 / **0** / 1V]
015	C:Ini MAX
	[-999 to 0 / **0** / 1V]
016	C:Ini min
	[-999 to 0 / **0** / 1V]
017	M:Ini MAX
	[-999 to 0 / **0** / 1V]

018	M:Ini min
	[-999 to 0 / **0** / 1V]
019	Y:Ini MAX
	[-999 to 0 / **0** / 1V]
020	Y:Ini min
	[-999 to 0 / **0** / 1V]

3573*	Temp/Humid Disp
001	Temp DispK
	[0 to 100 / **0** / 1°C]
002	Rel Humidity DispK
	[0 to 100 / **0** / 1 %RH]
003	Abs Humidity DispK
	[0 to 100 / **0** / 0.01 g/m^3]
004	Current Env DispK
	LL/ ML/ MM/ MH/ HH
005	Temp DispY
	[0 to 100 / **0** / 1°C]
006	Rel Humidity DispY
	[0 to 100 / **0** / 1 %RH]
007	Abs Humidity DispY
	[0 to 100 / **0** / 0.01 g/m^3]
008	Current Env DispY
	LL/ ML/ MM/ MH/ HH

3575*	Dev DC Control **DFU**

001	K
	[-800 to -200 / **-500** / 1V]
002	C
	[-800 to -200 / **-500** / 1V]
003	M
	[-800 to -200 / **-500** / 1V]
004	Y
	[-800 to -200 / **-500** / 1V]
005	Low Speed:K
	[-800 to -200 / **-500** / 1V]
006	Low Speed:C
	[-800 to -200 / **-500** / 1V]
007	Low Speed:M
	[-800 to -200 / **-500** / 1V]
008	Low Speed:Y
	[-800 to -200 / **-500** / 1V]

3576*	Grid Control: Display **DFU**
001	K
	[-999 to -300 / **-700** / 1V]
002	C
	[-999 to -300 / **-700** / 1V]
003	M
	[-999 to -300 / **-700** / 1V]
004	Y
	[-999 to -300 / **-700** / 1V]

005	Low Speed:K
	[-999 to -300 / **-700** / 1V]
006	Low Speed:C
	[-999 to -300 / **-700** / 1V]
007	Low Speed:M
	[-999 to -300 / **-700** / 1V]
008	Low Speed:Y
	[-999 to -300 / **-700** / 1V]

3577*	Charge Current Contrl:Displ **DFU**
001	Charge Switch:Execute Setting
	Enables or disables the Charge Switch mode. [0 or 1 / **1** / 1] 0: Disable, 1: Enable
002	Charge Switch Execute Page
	[0 to 1000 / **0** / 1 KP]
003	LL
	[0 to 1800 / **1800** / 1 µA]
004	MM
	[0 to 1800 / **1500** / 1 µA]
005	HH
	[0 to 1800 / **1200** / 1 µA]
006	Fixed
	[0 to 1800 / **1800** / 1 µA]
010	Normal Speed K
	[0 to 1800 / **1800** / 1uA]

011	Normal Speed C
	[0 to 1800 / **1800** / 1uA]
012	Normal Speed M
	[0 to 1800 / **1800** / 1uA]
013	Normal Speed Y
	[0 to 1800 / **1800** / 1uA]

3581*	LD Power Control **DFU**
001	K
	[20 to 255 / **70** / 0.1%]
002	C
	[20 to 255 / **70** / 0.1%]
003	M
	[20 to 255 / **70** / 0.1%]
004	Y
	[20 to 255 / **70** / 0.1%]
005	Low Speed:K
	[20 to 255 / **70** / 1%]
006	Low Speed:C
	[20 to 255 / **70** / 1%]
007	Low Speed:M
	[20 to 255 / **70** / 1%]
008	Low Speed:Y
	[20 to 255 / **70** / 1%]

3583*	Patch LD Power Adj **DFU**

001	Col_LD
	[10 to 255 / **55** / 1dec]
002	K_LD
	[10 to 255 / **55** / 1dec]

3591*	Vd Potential Correct **DFU**
001	Coefficient
	[0 to 1 / **0.48** / 0.01]
002	Max
	[0 to 1000 / **225** / 1V]
003	Min
	[0 to 1000 / **135** / 1V]
004	Vd U-Limit:Exceeded Control
	[0 to 1 / **1** / 0.01]
005	Vd L-Limit:Exceeded Control
	[0 to 1 / **0** / 0.01]
006	Vd Constant
	[-1000 to 1000 / **0** / 1V]

3701*	Tnr Refresh Mode **DFU**
001	Image Area:K
	[0 to 100 / **12.5** / 0.01%]
002	Image Area:C
	[0 to 100 / **6** / 0.01%]
003	Image Area:M
	[0 to 100 / **6** / 0.01%]

004	Image Area:Y
	[0 to 100 / **6** / 0.01%]
005	Image Area Thresh:K
	[0 to 100 / **12.5** / 0.1%]
006	Image Area Thresh:C
	[0 to 100 / **6** / 0.1%]
007	Image Area Thresh:M
	[0 to 100 / **6** / 0.1%]
008	Image Area Thresh:Y
	[0 to 100 / **6** / 0.1%]
009	Max Pattern Length
	[0 to 25 / **25** / 1mm]
010	Need Ref Length:K
	[0 to 65535 / **0** / 1mm]
011	Need Ref Length:C
	[0 to 65535 / **0** / 1mm]
012	Need Ref Length:M
	[0 to 65535 / **0** / 1mm]
013	Need Ref Length:Y
	[0 to 65535 / **0** / 1mm]
014	Interrupt Thresh
	[0 to 65535 / **300** / 1mm]
015	Idling Time 1
	[0 to 250 / **0** / 1 sec.]
016	Idling Time 2
	[0 to 250 / **25** / 1 sec.]

017	Repeat Time
	[1 to 30 / **7** / 1 time]
020	Exe Tnr Ref:KCMY
	Executes the toner refresh mode for all colors.
021	Exe Tnr Ref:K
	Executes the toner refresh mode for all colors.
022	Exe Tnr Ref:C
	Executes the toner refresh mode for all colors.
023	Exe Tnr Ref:M
	Executes the toner refresh mode for all colors.
024	Exe Tnr Ref:Y
	Executes the toner refresh mode for all colors.

3702*	Toner Consumption
001	PCU: Bk
	[0 to 99999999 / **0** / 1g]
002	PCU: C
	[0 to 99999999 / **0** / 1g]
003	PCU: M
	[0 to 99999999 / **0** / 1g]
004	PCU: Y
	[0 to 99999999 / **0** / 1g]
005	Development: Bk
	[0 to 99999999 / **0** / 1g]
006	Development: C
	[0 to 99999999 / **0** / 1g]

007	Development: M
	[0 to 99999999 / **0** / 1g]
008	Development: Y
	[0 to 99999999 / **0** / 1g]

3703*	life prediction
001	remaining PCU:Bk life
	[-99999999 to 99999999 / **0** / 1page]
002	remaining PCU:C life
	[-99999999 to 99999999 / **0** / 1page]
003	remaining PCU:M life
	[-99999999 to 99999999 / **0** / 1page]
004	remaining PCU:Y life
	[-99999999 to 99999999 / **0** / 1page]
005	PCU:BK
	[0 to 100 / 0 / 0.0001 µm]
006	PCU: C
	[0 to 100 / 0 / 0.0001 µm]
007	PCU: M
	[0 to 100 / 0 / 0.0001 µm]
008	PCU: Y
	[0 to 100 / 0 / 0.0001 µm]
009	remaining DEV:Bk life
	Displays the remaining part life of the developer in the black development unit. [0 to 9999999 / - / 1 page]

010	remaining DEV:C life
	Displays the remaining part life of the developer in the cyan development unit. [0 to 9999999 / - / 1 page]
011	remaining DEV:M life
	Displays the remaining part life of the developer in the magenta development unit. [0 to 9999999 / - / 1 page]
012	remaining DEV:Y life
	Displays the remaining part life of the developer in the yellow development unit. [0 to 9999999 / - / 1 page]
013	runtime DEV:BK
	Displays the rotation time of the black development unit. [0 to 999999/ - / 1 min.]
014	runtime DEV:C
	Displays the rotation time of the cyan development unit. [0 to 999999 / - / 1 min.]
015	runtime DEV:M
	Displays the rotation time of the magenta development unit. [0 to 999999 / - / 1 min.]
016	runtime DEV:Y
	Displays the rotation time of the yellow development unit. [0 to 999999 / - / 1 min.]
017	Tnr supply time:BK
	Displays the activation time of the black toner supply clutch. [0 to 9999999 / - / 1 sec.]
018	Tnr supply time:C
	Displays the activation time of the cyan toner supply clutch. [0 to 9999999 / - / 1 sec.]

019	Tnr supply time:M
	Displays the activation time of the magenta toner supply clutch. [0 to 9999999 / - / 1 sec.]
020	Tnr supply time:Y
	Displays the activation time of the yellow toner supply clutch. [0 to 9999999 / - / 1 sec.]

3801	Init TD Sensor
001	All Colors
	Executes the TD sensor initialization for all development units.
002	Col
	Executes the TD sensor initialization for the color development units.
003	K
	Executes the TD sensor initialization for the black development unit.
004	C
	Executes the TD sensor initialization for the cyan development unit.
005	M
	Executes the TD sensor initialization for the magenta development unit.
006	Y
	Executes the TD sensor initialization for the yellow development unit.
007*	Execute Color Select
	Selects the execution color(s) for the TD sensor initialization. [0 x 0F to 0 x 00 / **0 x 0F** / 1]
008	Execute:Slected Colors
	Executes the TD sensor initializing for the selected color.

3802*	TD Sn Init OK?

001	From Left:KCMY
	[0 to 9999 / **4444** / 1] 1: Success, 4: Not executed, 9: Failure

3820	Manual ProCon
001	Normal ProCon
	Executes the process control.
002	Exe Density Adj
	Executes the toner density adjustment.
003	ACC RunTime ProCon
	Executes the process control before ACC.

3821*	ProCon OK?
	For details, see "Process Control Troubleshooting" under "Troubleshooting" chapter in the Field Service Manual".
001	History:Last
	[0 to 99999999 / **0** / 1]
002	History:Last2
	[0 to 99999999 / **0** / 1]
003	History:Last3
	[0 to 99999999 / **0** / 1]
004	History:Last4
	[0 to 99999999 / **0** / 1]
005	History:Last5
	[0 to 99999999 / **0** / 1]
006	History:Last6
	[0 to 99999999 / **0** / 1]

007	History:Last7
	[0 to 99999999 / **0** / 1]
008	History:Last8
	[0 to 99999999 / **0** / 1]
009	History:Last9
	[0 to 99999999 / **0** / 1]
010	History:Last10
	[0 to 99999999 / **0** / 1]

System SP4-xxx: 1 (D095 only)

SP4-xxx Scanner

4008	Sub Scan Magnification Ad
	Adjusts the magnification in the sub scan direction for scanning. If this value is changed, the scanner motor speed is changed. [-0.9 to +0.9 / **0** / 0.1 %] Use the "⊖" key to enter the minus (–) before entering the value. Setting a lower value reduces the motor speed and lengthens the image in the sub scan direction (paper direction). Setting a larger value increases the motor speed and shortens the image in the sub scan direction.

4010	Sub Scan Registration Adj
	Adjusts the leading edge registration for scanning. [-9.0 to +9.0 / **0** / 0.1 mm] Use the ""⊖" key to enter the minus (–) before entering the value. A minus setting moves in the direction of the leading edge. A larger value shifts the image away from the leading edge, and a smaller value shifts the image toward the leading edge.

4011	Main Scan Reg
	Adjusts the side-to-side registration for scanning. [-2.0 to +2.0 / **0** / 0.1 mm] (–): The image disappears at the left side. (+): The image appears at the left side. Use the "⊖" key to enter the minus (–) before entering the value.

4012	Set Scale Mask
	Adjusts the erase margin for scanning. The leading, trailing, right and left margins can be set independently. Do not adjust this unless the user wishes to have a scanner margin that is greater than the printer margin.

001	Book:Sub LEdge	Leading edge, sub scan direction [0 to 3.0 / **1** / 0.1 mm]
002	Book:Sub TEdge	Trailing edge, sub scan direction [0 to 3.0 / **0** / 0.1 mm]
003	Book:Main: LEdge	Front, main scan direction [0 to 3.0 / **1** / 0.1 mm]
004	Book:Main:TEdge	Back, main scan direction [0 to 3.0 / **0** / 0.1 mm]

4013	Scanner Free Run	
001	Lamp OFF	Allows scanner free running with exposure lamp off.
002	Lamp ON	Allows scanner free running with the exposure lamp on.

4014	Scan 1Scan
	Scan 1 time with the exposure lamp on.

4015	Scanner Speed Adjustment
	Displays the value of the scanner speed fine adjustment. [-20 to +20 / **0** / 1mm] Scanner speed fine adjustment is automatically done when the main switch is turned on, and the current setting is overwritten.

4301	APS Sensor Output Display
	Displays the APS sensor output signals when an original is placed on the exposure glass.

4303	APS A5 / HLT Size Detection

	Selects whether or not the machine detects the original as A5 or HLT size when the APS sensor does not detect the size. [0 to 1 / **0** / 1] 0: No original 1: A5 length/$5_{1/2}$" x $8_{1/2}$" If 1 is selected, the paper size is determined as A5 length/$5_{1/2}$" X $8_{1/2}$" even if the paper size is too small to be detected on the exposure glass.

4305	8K/16K Detection
	Change the size detection. [0 to 3 / **0** / 1] 0: Normal Detection 1: A4/LT detected : LEF=A4, SEF=LT 2: A4/LT detected : LEF=LT, SEF=A4 3: 8K/16K series: A3/B4=8KSEF, A4SEF/B4SEF/A5SEF=16K SEF A4LEF/B4LEF/A5LEF=16K LEF

4400	Original Edge Mask	
	This SP sets the mask area to remove shadows when scanning originals from the exposure glass in Book mode. Note: "LE" denotes "leading edge" and "TE" denotes "trailing edge".	
001	Sub:LEdge	[0 to 3 / **0** / 0.1 mm]
002	Sub:TEdge	
003	Main:LEdge	
004	Main:TEdge	

4417	IPU Test Pattern
	Test Pattern: [0 to 24 / **0** / 1]

	0: Scanned image 1: Gradation main scan A 2: Gradation main scan B 3: Gradation main scan C 4: Gradation main scan D 5: Gradation sub scan (1) 6: Grid Pattern 7: Slant grid pattern 8: Gradation RGBCMYK 9: UCR pattern 10: Color patch 16 (1)	11: Color patch 16 (2) 12: Color patch 64 13: Grid pattern CMYK 14: Color patch CMYK 15: Gray pattern (1) 16: Gray pattern (2) 17: Gray pattern (3 18: Shading pattern 19:Thin line pattern 20: Scanned + Grid pattern 21: Scanned + Gray scale 22: Scanned + Color patch 23: Scanned + Slant grid C 24:: Scanned + Slant grid D

4440	Saturation Adj
	[0 to 5 / **3** / 1]

4460	Scanner Digital AE Setting	
	This SP sets the lower limit and level for background removal when background removal is selected with a scanner application.	
001	Set Low Limit	[0 to 1023 / **392** / 1]
002	Background Level	[0 to 1023 / **972** / 1]

4501	ACC Target Den
001	Copy:K:Text
	[0 to 10 / **5** / 1]
002	Copy:C:Text
	[0 to 10 / **5** / 1]

003	Copy:M:Text
	[0 to 10 / **5** / 1]
004	Copy:Y:Text
	[0 to 10 / **5** / 1]
005	Copy:K:Photo
	[0 to 10 / **5** / 1]
006	Copy:C:Photo
	[0 to 10 / **5** / 1]
007	Copy:M:Photo
	[0 to 10 / **5** / 1]
008	Copy:Y:Photo
	[0 to 10 / **5** / 1]

4505	ACC Cor:Bright
001	Master:K
	[-128 to 127 / **0** / 1]
002	Master:C
	[-128 to 127 / **0** / 1]
003	Master:M
	[-128 to 127 / **0** / 1]
004	Master:Y
	[-128 to 127 / **0** / 1]
005	Slave:K
	[-128 to 127 / **0** / 1]
006	Slave:C
	[-128 to 127 / **0** / 1]

007	Slave:M
	[-128 to 127 / **0** / 1]
008	Slave:Y
	[-128 to 127 / **0** / 1]

4506	ACC Cor:Dark
001	Master:K
	[-128 to 127 / **0** / 1]
002	Master:C
	[-128 to 127 / **0** / 1]
003	Master:M
	[-128 to 127 / **0** / 1]
004	Master:Y
	[-128 to 127 / **0** / 1]
005	Slave:K
	[-128 to 127 / **0** / 1]
006	Slave:C
	[-128 to 127 / **0** / 1]
007	Slave:M
	[-128 to 127 / **0** / 1]
008	Slave:Y
	[-128 to 127 / **0** / 1]

4540	Print Coverage
001	RY Phase: Option
	[0 to 255 / **0** /1]

002	RY Phase: R
	[0 to 255 / **0** / 1]
003	RY Phase: G
	[0 to 255 / **0** / 1]
004	RY Phase: B
	[0 to 255 / **0** / 1]
005	YR Phase: Option
	[0 to 255 / **0** / 1]
006	YR Phase: R
	[0 to 255 / **0** / 1]
007	YR Phase: G
	[0 to 255 / **0** / 1]
008	YR Phase: B
	[0 to 255 / **0** / 1]
009	YG Phase: Option
	[0 to 255 / **0** / 1]
010	YG Phase: R
	[0 to 255 / **0** / 1]
011	YG Phase: G
	[0 to 255 / **0** / 1]
012	YG Phase: B
	[0 to 255 / **0** / 1]
013	GY Phase: Option
	[0 to 255 / **0** / 1]
014	GY Phase: R
	[0 to 255 / **0** / 1]

015	GY Phase: G
	[0 to 255 / **0** / 1]
016	GY Phase: B
	[0 to 255 / **0** / 1]
017	GC Phase: Option
	[0 to 255 / **0** / 1]
018	GC Phase: R
	[0 to 255 / **0** / 1]
019	GC Phase: G
	[0 to 255 / **0** / 1]
020	GC Phase: B
	[0 to 255 / **0** / 1]
021	CG Phase: Option
	[0 to 255 / **0** / 1]
022	CG Phase: R
	[0 to 255 / **0** / 1]
023	CG Phase: G
	[0 to 255 / **0** / 1]
024	CG Phase: B
	[0 to 255 / **0** / 1]
025	CB Phase: Option
	[0 to 255 / **0** / 1]
026	CB Phase: R
	[0 to 255 / **0** / 1]
027	CB Phase: G
	[0 to 255 / **0** / 1]

028	CB Phase: B
	[0 to 255 / **0** / 1]
029	BC Phase: Option
	[0 to 255 / **0** / 1]
030	BC Phase: R
	[0 to 255 / **0** / 1]
031	BC Phase: G
	[0 to 255 / **0** / 1]
032	BC Phase: B
	[0 to 255 / **0** / 1]
033	BM Phase: Option
	[0 to 255 / **0** / 1]
034	BM Phase: R
	[0 to 255 / **0** / 1]
035	BM Phase: G
	[0 to 255 / **0** / 1]
036	BM Phase: B
	[0 to 255 / **0** / 1]
037	MB Phase: Option
	[0 to 255 / **0** / 1]
038	MB Phase: R
	[0 to 255 / **0** / 1]
039	MB Phase: G
	[0 to 255 / **0** / 1]
040	MB Phase: B
	[0 to 255 / **0** / 1]

041	MR Phase: Option
	[0 to 255 / **0** / 1]
042	MR Phase: R
	[0 to 255 / **0** / 1]
043	MR Phase: G
	[0 to 255 / **0** / 1]
044	MR Phase: B
	[0 to 255 / **0** / 1]
045	RM Phase: Option
	[0 to 255 / **0** / 1]
046	RM Phase: R
	[0 to 255 / **0** / 1]
047	RM Phase: G
	[0 to 255 / **0** / 1]
048	RM Phase: B
	[0 to 255 / **0** / 1]

4550	Scanner: Text/
4551	Scanner: Text
4552	Scanner: Dropout Color: Text
4553	Scanner: Text/Photo
4554	Scanner: Photo
4565	Scanner: Grayscale
4570	Scanner: Color: Text/Photo
4571	Scanner: Color: Photo

4572	Scanner: Auto Color	
005	MTF Filter:0-15	Sets the MTF level (Modulation Transfer Function) designed to improve image contrast. Set higher for stronger effect, lower for weaker effect. [0 to 15/**8**/1]
006	Smoothing Filter:0-7	Use to remove "jaggies" if they appear. Set higher for smoother. [0 to 7/**4**/1]
007	Brightness:1-255	Set higher for darker, set lower for lighter. [1 to 255/**128**/1]
008	Contrast:1-255	Set higher for more contrast, set lower for less contrast. [1 to 255/**128**/1]
009	Isolated Dot Removal:0-7	This SP sets the level for removing dots when a color original is scanned with a scanner software application. The higher the setting, the greater the effect applied for removing background dots. [0 to 7/**0**/1]

4600	Display the ID of ASIC	
001	VSBCNT	Displays the SBU ID code confirmed by reading the SBU after the SBU adjusts automatically at power on. DFU [0 to 0xFF / **-** / 1]
002	DAGL_L	Displays the SBU ID code confirmed by reading the SBU after the SBU adjusts automatically at power on. DFU [0 to 0xFF / **-** / 1]
003	DAGL_F	Displays the SBU ID code confirmed by reading the SBU after the SBU adjusts automatically at power on. DFU [0 to 0xFF / **-** / 1]

System SP4-xxx: 2 (D095 only)

4603	AGC Operation	
001	HP Detect enable	Execute SBU registration adjustment (factory default)

4609	Gray Balance Adj Value R
001	[-256 to 255 / **27** / 1]

4610	Gray Balance Adj Value G
001	[-256 to 255 / **18** / 1]

4611	Gray Balance Adj Value B
001	[-256 to 255 / **-14** / 1]

4628	Gain Range Adj Value R	
001	FC:F:R	[0 or 1 / **0** / 1]
003	FC:L:R	[0 or 1 / **0** / 1]
005	BK:F:R	[0 or 1 / **0** / 1]
007	BK:L:R	[0 or 1 / **0** / 1]

4629	Gain Range Adj Value G	
001	FC:F:R	[0 or 1 / **0** / 1]
003	FC:L:R	[0 or 1 / **0** / 1]
005	BK:F:R	[0 or 1 / **0** / 1]
007	BK:L:R	[0 or 1 / **0** / 1]

4630	Gain Range Adj Value B	
001	FC:F:R	[0 or 1 / **0** / 1]
003	FC:L:R	[0 or 1 / **0** / 1]

005	BK:F:R	[0 or 1 / **0** / 1]
007	BK:L:R	[0 or 1 / **0** / 1]

4631 4632 4633	Gain Adj Value R Gain Adj Value G Gain Adj Value B	
001	FC:F:RE	[0 or 1023 / **0** / 1]
002	FC:F:RO	[0 or 1023 / **0** / 1]
003	FC:L:RE	[0 or 1023 / **0** / 1]
004	FC:L:RO	[0 or 1023 / **0** / 1]
005	BK:F:RE	[0 or 1023 / **0** / 1]
006	BK:F:RO	[0 or 1023 / **0** / 1]
007	BK:L:RE	[0 or 1023 / **0** / 1]
008	BK:L:RO	[0 or 1023 / **0** / 1]

4641	LoopNumber:WhiteLevel
001	FC
	[0 to 255 / **0** / 1]
002	BK
	[0 to 255 / **0** / 1]

4646	ErrorFlag:Auto-Adj Scanner	
001	Gain1:First	[0 or 4095 / **0** / 1]
002	Gain1:Last	[0 or 4095 / **0** / 1]
003	Gain2:First	[0 or 4095 / **0** / 1]
004	Gain2:Last	[0 or 4095 / **0** / 1]
005	Black Level :First :FC	[0 or 4095 / **0** / 1]

006	Black Level :Last :FC	[0 or 4095 / **0** / 1]
007	Black Level :First :BK	[0 or 4095 / **0** / 1]
008	Black Level :Last :BK	[0 or 4095 / **0** / 1]

4647	ErrorFlag:Scanner Hardware
001	[0 or 1023 / **0** / 1]

4677 4678 4679	Gain Range Adj Value R Gain Range Adj Value G Gain Range Adj Value B	
001	FC:F:R:Factory Setting	[0 or 1 / **0** / 1]
003	FC:L:R:Factory Setting	[0 or 1 / **0** / 1]
005	BK:F:R:Factory Setting	[0 or 1 / **0** / 1]
007	BK:L:R:Factory Setting	[0 or 1 / **0** / 1]

4680	Gain Adj Value R	
001	FC:F:RE:Factory Setting	[0 to 1023 / **0** / 1]
002	FC:F:RO:Factory Setting	[0 to 1023 / **0** / 1]
003	FC:L:RE:Factory Setting	[0 to 1023 / **0** / 1]
004	FC:L:RO:Factory Setting	[0 to 1023 / **0** / 1]
005	BK:F:RE:Factory Setting	[0 to 1023 / **0** / 1]
006	BK:F:RO:Factory Setting	[0 to 1023 / **0** / 1]
007	BK:L:RE:Factory Setting	[0 to 1023 / **0** / 1]
008	BK:L:RO:Factory Setting	[0 to 1023 / **0** / 1]

4681	Gain Adj Value G	
001	FC:F:GE:Factory Setting	[0 to 1023 / **0** / 1]
002	FC:F:GO:Factory Setting	[0 to 1023 / **0** / 1]

003	FC:L:GE:Factory Setting	[0 to 1023 / **0** / 1]
004	FC:L:GO:Factory Setting	[0 to 1023 / **0** / 1]
005	BK:F:GE:Factory Setting	[0 to 1023 / **0** / 1]
006	BK:F:GO:Factory Setting	[0 to 1023 / **0** / 1]
007	BK:L:GE:Factory Setting	[0 to 1023 / **0** / 1]
008	BK:L:GO:Factory Setting	[0 to 1023 / **0** / 1]

4682	Gain Adj Value B	
001	FC:F:BE:Factory Setting	[0 to 1023 / **0** / 1]
002	FC:F:BO:Factory Setting	[0 to 1023 / **0** / 1]
003	FC:L:BE:Factory Setting	[0 to 1023 / **0** / 1]
004	FC:L:BO:Factory Setting	[0 to 1023 / **0** / 1]
005	BK:F:BE:Factory Setting	[0 to 1023 / **0** / 1]
006	BK:F:BO:Factory Setting	[0 to 1023 / **0** / 1]
007	BK:L:BE:Factory Setting	[0 to 1023 / **0** / 1]
008	BK:L:BO:Factory Setting	[0 to 1023 / **0** / 1]

4690	White Level Peak Data	
001	FC:F:GE	[0 to 255 / **0** / 1]
002	FC:F:GO	[0 to 255 / **0** / 1]
003	FC:L:GE	[0 to 255 / **0** / 1]
004	FC:L:GO	[0 to 255 / **0** / 1]
005	BK:F:GE	[0 to 255 / **0** / 1]
006	BK:F:GO	[0 to 255 / **0** / 1]
007	BK:L:GE	[0 to 255 / **0** / 1]
008	BK:L:GO	[0 to 255 / **0** / 1]

4691	White Level Peak Data	
001	FC:F:GE	[0 to 255 / **0** / 1]
002	FC:F:GO	[0 to 255 / **0** / 1]
003	FC:L:GE	[0 to 255 / **0** / 1]
004	FC:L:GO	[0 to 255 / **0** / 1]
005	BK:F:GE	[0 to 255 / **0** / 1]
006	BK:F:GO	[0 to 255 / **0** / 1]
007	BK:L:GE	[0 to 255 / **0** / 1]
008	BK:L:GO	[0 to 255 / **0** / 1]

4692	White Level Peak Data	
001	FC:F:BE	[0 to 255 / **0** / 1]
002	FC:F:BO	[0 to 255 / **0** / 1]
003	FC:L:BE	[0 to 255 / **0** / 1]
004	FC:L:BO	[0 to 255 / **0** / 1]
005	BK:F:BE	[0 to 255 / **0** / 1]
006	BK:F:BO	[0 to 255 / **0** / 1]
007	BK:L:BE	[0 to 255 / **0** / 1]
008	BK:L:BO	[0 to 255 / **0** / 1]

4693	Black Level Data	
001	FC:F:REE	[0 to 255 / **0** / 1]
002	FC:F:ROE	[0 to 255 / **0** / 1]
003	FC:F:REO	[0 to 255 / **0** / 1]
004	FC:F:ROO	[0 to 255 / **0** / 1]
005	FC:L:REE	[0 to 255 / **0** / 1]
006	FC:L:ROE	[0 to 255 / **0** / 1]

007	FC:L:REO	[0 to 255 / **0** / 1]
008	FC:L:ROO	[0 to 255 / **0** / 1]
009	BK:F:REE	[0 to 255 / **0** / 1]
010	BK:F:ROE	[0 to 255 / **0** / 1]
011	BK:F:REO	[0 to 255 / **0** / 1]
012	BK:F:ROO	[0 to 255 / **0** / 1]
013	BK:L:REE	[0 to 255 / **0** / 1]
014	BK:L:ROE	[0 to 255 / **0** / 1]
015	BK:L:REO	[0 to 255 / **0** / 1]
016	BK:L:ROO	[0 to 255 / **0** / 1]

4694	Black Level Data	
001	FC:F:GEE	[0 to 255 / **0** / 1]
002	FC:F:GOE	[0 to 255 / **0** / 1]
003	FC:F:GEO	[0 to 255 / **0** / 1]
004	FC:F:GOO	[0 to 255 / **0** / 1]
005	FC:L:GEE	[0 to 255 / **0** / 1]
006	FC:L:GOE	[0 to 255 / **0** / 1]
007	FC:L:GEO	[0 to 255 / **0** / 1]
008	FC:L:GOO	[0 to 255 / **0** / 1]
009	BK:F:GEE	[0 to 255 / **0** / 1]
010	BK:F:GOE	[0 to 255 / **0** / 1]
011	BK:F:GEO	[0 to 255 / **0** / 1]
012	BK:F:GOO	[0 to 255 / **0** / 1]
013	BK:L:GEE	[0 to 255 / **0** / 1]
014	BK:L:GOE	[0 to 255 / **0** / 1]

015	BK:L:GEO	[0 to 255 / **0** / 1]
016	BK:L:GOO	[0 to 255 / **0** / 1]

4695	Black Level Data	
001	FC:F:BEE	[0 to 255 / **0** / 1]
002	FC:F:BOE	[0 to 255 / **0** / 1]
003	FC:F:BEO	[0 to 255 / **0** / 1]
004	FC:F:BOO	[0 to 255 / **0** / 1]
005	FC:L:BEE	[0 to 255 / **0** / 1]
006	FC:L:BOE	[0 to 255 / **0** / 1]
007	FC:L:BEO	[0 to 255 / **0** / 1]
008	FC:L:BOO	[0 to 255 / **0** / 1]
009	BK:F:BEE	[0 to 255 / **0** / 1]
010	BK:F:BOE	[0 to 255 / **0** / 1]
011	BK:F:BEO	[0 to 255 / **0** / 1]
012	BK:F:BOO	[0 to 255 / **0** / 1]
013	BK:L:BEE	[0 to 255 / **0** / 1]
014	BK:L:BOE	[0 to 255 / **0** / 1]
015	BK:L:BEO	[0 to 255 / **0** / 1]
016	BK:L:BOO	[0 to 255 / **0** / 1]

4804	Home Position Operation
001	Execute home positioning 1 time.

4806	FL Correction ON/OFF	
001	RED	[0 or 1 / **0** / 1]
002	GREEN	[0 or 1 / **0** / 1]

003	BLUE	[0 or 1 / **0** / 1]
004	BK:RED	[0 or 1 / **0** / 1]
005	BK:GREEN	[0 or 1 / **0** / 1]
006	BK:BLUR	[0 or 1 / **0** / 1]

4808	Result FL Detection	
001-020	FC:FR1-20	[0 to 1023 / **0** / 1]
021-040	FC:LR1-20	[0 to 1023 / **0** / 1]
041-060	FC:FG1-20	[0 to 1023 / **0** / 1]
061-080	FC:LG1-20	[0 to 1023 / **0** / 1]
081-100	FC:FB1-20	[0 to 1023 / **0** / 1]
101-120	FC:LB1-20	[0 to 1023 / **0** / 1]
121-140	BK:FR1-20	[0 to 1023 / **0** / 1]
141-160	BK:LR1-20	[0 to 1023 / **0** / 1]
161-180	BK:FG1-20	[0 to 1023 / **0** / 1]
181-200	BK:LG1-20	[0 to 1023 / **0** / 1]
201-220	BK:FB1-20	[0 to 1023 / **0** / 1]
221-240	BK:LB1-20	[0 to 1023 / **0** / 1]

4809	Result FL Correction	
001-020	FC:FR1-20	[0 to 1023 / **0** / 1]
021-040	FC:LR1-20	[0 to 1023 / **0** / 1]
041-060	FC:FG1-20	[0 to 1023 / **0** / 1]
061-080	FC:LG1-20	[0 to 1023 / **0** / 1]
081-100	FC:FB1-20	[0 to 1023 / **0** / 1]
101-120	FC:LB1-20	[0 to 1023 / **0** / 1]
121-140	BK:FR1-20	[0 to 1023 / **0** / 1]

141-160	BK:LR1-20	[0 to 1023 / **0** / 1]
161-180	BK:FG1-20	[0 to 1023 / **0** / 1]
181-200	BK:LG1-20	[0 to 1023 / **0** / 1]
201-220	BK:FB1-20	[0 to 1023 / **0** / 1]
221-240	BK:LB1-20	[0 to 1023 / **0** / 1]

4813	ThickPaper Adjust	
001	ON/OFF	[0 or 1 / **0** / 1]
002	Value R	[80 or 100 / **95** / 1%]
003	Value G	[80 or 100 / **95** / 1%]
004	Value B	[80 or 100 / **95** / 1%]

4820	Lamp Detection	
002	Lamp1 Counter	[0 to 255 / **0** / 1]
003	Lamp2 Counter	[0 to 255 / **0** / 1]
004	Clear Counters	Clear the values of the lamp1 detection counter and the lamp2 detection counter.
005	Lamp1White Level FE	[0 to 255 / **0** / 1]
006	Lamp1White Level FO	[0 to 255 / **0** / 1]
007	Lamp1White Level LE	[0 to 255 / **0** / 1]
008	Lamp2White Level LO	[0 to 255 / **0** / 1]
009	Lamp2White Level FE	[0 to 255 / **0** / 1]
010	Lamp2White Level FO	[0 to 255 / **0** / 1]
011	Lamp2White Level LE	[0 to 255 / **0** / 1]
012	Lamp2White Level LO	[0 to 255 / **0** / 1]

4901	Scan Correction

020	Background Erase: Blue Original (Lighter) [0 to 192 / **63** / 1]
021	Background Erase: Blue Original (Normal) [0 to 192 / **85** / 1]
022	Background Erase: Blue Original (Darker) [0 to 192 / **100** / 1]

4902	Disp ACC Data	
001	R_DATA1	[0 to 255 / **0** / 1]
002	G_DATA1	[0 to 255 / **0** / 1]
003	B_DATA1	[0 to 255 / **0** / 1]
004	R_DATA2	[0 to 255 / **0** / 1]
005	G_DATA2	[0 to 255 / **0** / 1]
006	B_DATA2	[0 to 255 / **0** / 1]

4904	Test Scan IPU
001	Test 1
	Performs write and read test for the CPU on the IPU by conducting a compare check that reads and writes to each register of the ASIC. [0 to 65535 / **0** / 1]
002	Test 2
	Performs a check of the image paths and connections and displays the location of an error is detected. [0 to 65535 / **0** / 1]

4905	Select Gradation Level
001	Changes the threshold parameters of error diffusion. [0 to 255 / **0** / 1]

4918	Man Gamma Adj

009	[0 / **0** / 0]

4954	Read/Restore Std	
001	Read New Chart	Reads the "Standard Color Test Chart" to calibrate the scanner gamma curve.
002	Recall Prev Chart	Restores the scanner gamma to the previous value (not the factory setting).
004	Set Std Chart	Overwrite the standard data of the scanner gamma.

4991	IPU Image Pass Selection
001	Selects the image path of the IPU. [0 to 11 / **2** / 1]
	0: Scanned RGB image 1: RGB image in scanner I/F 2: RGB image after shading correction (default) 3: RGB image after shading correction 4: Test pattern data (grayscale) 5: RGB image after line interval correction 6: RGB image after digital AE correction 7: RGB image after vertical line correction 8: RGB image after scanner gamma correction 9: RTB image after filtering with MTF 10: RGB image after ADS 11: RGB image after color processing

4993	Highlight Correction	
001	Sensibility	Sets the level of sensitivity for the removal of shadows that can be caused with originals that have been marked up with highlighter pens. [0 to 9/**4**/1] Lowering the setting reduces the removal effect, and raising the setting increases the removal effect.

002	Region	Sets the region where highlight removal is applied. [0 to 9/**4**/1] A lower setting increases the size of the region, and a higher setting reduces the size of the region.

4994	Scanner Text/Photo Judgment
	Use this SP to adjust the copier capability to distinguish between text and photo areas of images. This adjustment applies only to scanner applications using the high compression PDF mode. [0 to 2/**1**/1] 0: Nearer text 1: Default 2: Nearer photo

System SP5-xxx

SP5-XXX (Mode)

5019	Paper Size		
	Selects the paper size for each tray.		
002	Tray 1	*CTL	A4 LEF, LT LEF, A3, B4, A4 SEF, DLT, LG, LT SEF or Custom SIze
004	Tray 3	*CTL	A4 LEF, B5 LEF, A5 SEF, LT LEF, HLT or Custom SIze
005	Tray 4	*CTL	
006	Tray 5	*CTL	

5024	mm/inch Display Selection		
	Display units (mm or inch) for custom paper sizes.		
001	0:mm 1:inch	*CTL	0: mm (Europe/Asia) 1: inch (USA)

5040	Custom Size: Vertical		
	Specifies the length of the custom size.		
002	Tray 1	*CTL	
004	Tray 3	*CTL	
005	Tray 4	*CTL	
006	Tray 5	*CTL	

5041	Custom Size: Vertical		
	Specifies the width of the custom size.		
002	Tray 1	*CTL	
004	Tray 3	*CTL	

005	Tray 4	*CTL	
006	Tray 5	*CTL	

5045	Accounting Counter		
	Selects the counting method. **NOTE:** The counting method can be changed only once, regardless of whether the counter value is negative or positive.		
001	Counter Method	*CTL	[0 or 1 / **0** / -] 0: Developments 1: Prints

5047	Paper Display	*CTL	
	Determines whether the tray loaded with paper printed on one side is displayed. [0 to 1 / 0]		
	0: Not displayed, 1: Displayed		

5051	Refill Toner Detection Display		
	Enables or disables the toner refill detection display.		
001	Refill Toner Detection Display	*CTL	[0 or 1 / **0** / -] Alphanumeric 0: ON, 1: OFF

5055	Display IP Address		
	Display or does not display the IP address on the LCD.		
001	-	*CTL	[0 or 1 / **0** / -] 0: OFF 1: ON

5056	[Coverage Counter Display]
	Display or does not display the coverage counter on the LCD.

	-	*CTL	[0 or 1 / **0** / -] 0: Not display, 1: Display

5062	Parts PM Display Setting		
	Determines whether each PM part counter is displayed.		
001	-	*CTL	[0 or 1 / **1** / -] 0: ON, 1: OFF

5104	A3/DLT Double Count **SSP**		
	Specifies whether the counter is double clicked for A3/DLT size prints. When you have to change this SP, ask your supervisor.		
001	A3 Double Count	*CTL	[0 to 2 / **0** / 1 /step] 0: NO (Normal count) 1: YES (Double count) 2: YES except By-pass (Normal count for unknown size)

5112	Non-Std. Paper Sel.	*CTL	
	Determines whether a non-standard paper size can be input for the universal cassette trays (Tray 2, Tray 3) [0 to 1 / **1** / -] 0: No 1: Yes. If "1" is selected, the customer will be able to input a non-standard paper size using the UP mode.		

5113	Optional Counter Type	*CTL	
001	Default Optional Counter Type		
	Selects the type of counter: 0: None 1: Key card (RK3, 4) Japan only 2: Key card down 5: MF key card		

002	External Optional Counter Type
	Enables the SDK application. This lets you select a number for the external device for user access control. Note: "SDK" refers to software on an SD card. [0 to 3 / **0** / 1] 0: None 1: Expansion Device 1 2: Expansion Device 2 3: Expansion Device 3

5114	Optional Counter I/F	*CTL	-
	This SP sets the machine for use with the optional counter. Default: Off 0: OFF, 1: ON		

5118	Disable Copying
	Temporarily denies access to the machine. [0 to 1/ **0** /-] 0: Release for normal operation 1: Prohibit access to machine

5120	Mode Clear Opt. Counter Removal	*CTL	
	Do not change. [0 to 2 / **0**] 0: Yes. Normal reset 1: Standby. Resets before job start/after completion 2: No. Normally no reset		

5121	Counter Up Timing	*CTL	

	Determines whether the optional key counter counts up at paper feed-in or at paper exit. [0 to 1 / **0**] 0: Feed count 1: No feed count

5126*	Set F-size Document **(D095 only)**
001	Selects the size for F-size document detection. [0 to 2 / **0** / 1] 0: Foolscap (8 1/2 x 13) 1: Folio (8 1/4 x 13) 2: F (8 x 13)

5127	APS OFF Mode **(D095 only)**
	This SP can be used to switch APS (Auto Paper Select) off when a coin lock or pre-paid key card device is connected to the machine. [0 to 1 / **0** / -] 0: On, 1: Off

5128	Code Mode With Key/Card Option **Japan Only**

5131*	Paper Size Type Selection
001	Selects the paper size type (for originals and copy paper). [0 to 2 / **1: NA, 2: EU** / 1] 0: Japan, 1: NA, 2: EU After changing the value, turn the main power switch off and on.

5148	Size Detection OFF		
	Turns on or off the automatic paper size detection.		
004	Tray 3	*CTL	[0 or 1 / **0** / -] 0: On, 1: Off
005	Tray 4	*CTL	
006	Tray 5	*CTL	

5162	App. Switch Method	*CTL	
	Controls if the application screen is changed with a hardware switch or a software switch. [0 to 1 / 0] 0: Soft Key Set 1: Hard Key Set		

5169	[CE Login]		
	If you will change the printer bit switches, you must 'log in' to service mode with this SP before you go into the printer SP mode.		
001	CE Login	*CTL	[0 or 1 / **0** / -] 0: Disabled 1: Enabled

5182	HDD Pages Mgmt **(D095 only)**		
	Selects the LS area for the page management on the HDD.		
001	Release LS Limit	*CTL	[0 or 1 / **0** / -] 0: Standard. 1: Extension
002	Change Pages/ Doc	*CTL	

5187	PM Counter Print Out in UP
	This setting determines whether the PM parts counter list is printed with or without the standard values. [0 or 1 / **0** / -] 0: Does not print standard values 1: Prints standard values

5188	Copy NV Version **(D095 only)**		
001		*CTL	Displays the version number of the NVRAM on the controller board.

5193	External Controller Info. Settings **(DFU)**		
001	-	*CTL	[0 to 10 / **6** / 1/step]

	Sets the external controller type. This setting is appropriately adjusted if an external controller is installed in the machine. 0: No external controller installed 1: EFI controller 2: Ratio controller 3: Egret controller 4: GJ 5: Creo 6: QX-100 7 to 10: Reserved

5195	Limitless SW **DFU**		
001		*CTL	[0 or 1 / **1** / -] 0: Productivity priority 1: Tray priority
	Selects the paper feed mode. **Productivity priority:** This changes the feeding tray as soon as the machine detects the priority tray even the paper still remains in the feeding tray. **Tray priority:** This changes the feeding tray after the paper in the tray where the machine has been feeding paper has been run out of. This SP is activated only when a customer selects the "Auto Paper Select".		

5199	Paper Set After Staple End		
003	-	*CTL	

	Enables or disables feeding out of the finisher without stapling. **[0: OFF]** [1: ON] 0: OFF" Paper feeds out with stapling at the maximum number of the finisher stapling when the machine gets a multiple printing job (over maximum number). 1: ON Paper feeds out without stapling at the maximum number of the finisher stapling when the machine gets a multiple printing job (over maximum number).

5212	Page Numbering **(D095 only)**		
	This program adjusts the position of the second side page numbers. A "– value" moves the page number positions to the left edge or leading edge (high position). A "+ value" moves the page number positions to the right edge or trailing edge (low position).		
003	Duplex Printout Right/Left Position	*CTL	[–10 to 10 / **0** / 1 mm/step]
004	Duplex Printout High/Low Position	*CTL	[–10 to 10 / **0** / 1 mm/step]

5302	Set Time		
	Adjusts the RTC (real time clock) time setting for the local time zone. Examples: For Japan (+9 GMT), enter 540 (9 hours x 60 min.) DOM: +540 (Tokyo) NA: -300 (New York) EU: + 60 (Paris) CH: +480 (Peking) TW: +480 (Taipei) AS: +480 (Hong Kong)		
002	Time Difference	*CTL#	[-1440 to 1440 / Area / 1 min./step]

5307	Summer Time

001	ON/OFF		
	Enables or disables the summer time mode. [0 to 1 / NA, EU, ASIA / 1 /step] 0: Disabled 1: Enabled NA and EUR: 1, ASIA: 0 **Note** • Make sure that both SP5-307-3 and -4 are correctly set. Otherwise, this SP is not activated even if this SP is set to "1".		
003	Start	-	-
	Specifies the start setting for the summer time mode. There are 8 digits in this SP. For months 1 to 9, the "0" cannot be input in the first digit, so the eight-digit setting for -2 or -3 becomes a seven-digit setting. 1st and 2nd digits: The month. [1 to 12] 3rd digit: The week of the month. [1 to 5] 4th digit: The day of the week. [0 to 6 = Sunday to Saturday] 5th and 6th digits: The hour. [00 to 23] 7th digit: The length of the advanced time. [0 to 9 / 1 hour /step] 8th digit: The length of the advanced time. [0 to 5 / 10 minutes /step] For example: 3500010 (EU default) The timer is advanced by 1 hour at am 0:00 on the 5th Sunday in March The digits are counted from the left. Make sure that SP5-307-1 is set to "1".		

004	End	-	-
	Specifies the end setting for the summer time mode. There are 8 digits in this SP. 1st and 2nd digits: The month. [1 to 12] 3rd digit: The week of the month. [0 to 5] 4th digit: The day of the week. [0 to 7 = Sunday to Saturday] 5th and 6th digits: The hour. [00 to 23] The 7th and 8 digits must be set to "00". The digits are counted from the left. Make sure that SP5-307-1 is set to "1".		

5401	Access Control **DFU**		
	When installing the SDK application, SAS (VAS) adjusts the following settings.		
103	Default Document ACL	*CTL	Whenever a new login user is added to the address book in external certification mode (for Windows, LDAP, RDH), the default document ACL is updated according to this SP setting. [0 to 3 / **0** / 1] 0: View 1: Edit 2: Edit/Delete 3: Full control Note: This SP setting is ignored on a machine that is not using document server.
200	SDK1 Unique ID	*CTL	This ID is overwritten by SAS (VAS) when you install or uninstall the SDK application.
201	SDK1 Certification Method	*CTL	[0 to 255 / **0** / 1 /step]
210	SDK2 Unique ID	*CTL	-
211	SDK2 Certification Method	*CTL	[0 to 255 / **0** / 1 /step]
220	SDK3 Unique ID	*CTL	-
221	SDK3 Certification Method	*CTL	[0 to 255 / **0** / 1 /step]

230	SDK Certification Device	*CTL	[0 or 1 / 0 / -] 0: Disable 1: Enable Bit 7 to Bit 0

5404	User Code Counter Clear		
001	UCodeCtrClr	*CTL	Clears all counters for users.

5414	Access Mitigation
001	Mitigation On/Off Switches on/off masking of continuously used IDs and passwords that are identical. [0 to 1 / **0** / 1] 0: Off 1: On
002	Mitigation Time Sets the length of time for excluding continuous access for identical user IDs and passwords. [0 to 60 / **15** /1 min]

5416	Access Information
001	Access User Max Number Limits the number of users used by the access exclusion and password attack detection functions. [50 to 200 / **200** /1 users]
002	Access Password Max Number Limits the number of passwords used by the access exclusion and password attack detection functions. [50 to 200 / **200** /1 passwords]
003	Monitor Interval Sets the processing time interval for referencing user ID and password information. [1 to 10 / **3** /1 sec]

5481	Authentication Error Code
	These SP codes determine how the authentication failures are displayed.
001	System Log Disp Determines whether an error code appears in the system log after a user authentication failure occurs. [0 to 1 / **0** / 1] 0: Off 1: On
002	Panel Disp Determines whether an error code appears on the operation panel after a user authentication failure occurs. [0 to 1 / **1** / 1] 1: On 0: Off

5501	PM Alarm	*CTL	-
001	PM Alarm Level	[0 to 9999 / **0** / 1 /step] 0: Alarm off 1 to 9999: Alarm goes off when Value (1 to 9999) x 1000 > PM counter	

5504	Jam Alarm	*CTL	-
001	Sets the alarm to sound for the specified jam level (document misfeeds are not included). [0 to 3 / **3** / 1 /step] 0: Zero (Off) 1: Low (2.5K jams) 2: Medium (3K jams) 3: High (6K jams)		

5505	Error Alarm		
	Sets the error alarm level. The error alarm counter counts "1" when any SC is detected. However, the error alarm counter decreases by "1" when an SC is not detected during a set number of printed sheets (for example, default 1500 sheets). The error alarm occurs when the SC error alarm counter reaches "5".		
001	-	*CTL	[0 to 255 / **85** / 100 pages /step]

5507	Supply Alarm	*CTL	-
001	Paper Supply Alarm	**0**: Off, 1: On	
002	Staple Supply Alarm	0: Off, **1**: On	
003	Toner Supply Alarm	0: Off, **1**: On	
006	Waste Toner Bottle Supply Alarm	0: Off, **1**: On	
080	Toner Call Timing	Changes the timing of the "Toner Supply Call" via the NRS, when the next conditions occur. **0**: At replacement 1: At near end	
128	Interval :Others	[250 to 10000 / **1000** / 1 /step]	
132	Interval :A3		
133	Interval :A4		
134	Interval :A5		
141	Interval :B4		
142	Interval :B5		
160	Interval :DLT		
164	Interval :LG		
166	Interval :LT		
172	Interval :HLT		

5508	CC Call	
001	Jam Remains	Enables/disables initiating a call. [0 to 1 / **1** / 1] 0: Disable 1: Enable
002	Continuous Jams	
003	Continuous Door Open	
011	Jam Detection: Time Length	Sets the length of time to determine the length of an unattended paper jam. [3 to 30 / **10** / 1 minute]
012	Jam Detection Continuous Count	Sets the number of continuous paper jams required to initiate a call. [2 to 10 / **5** / 1 time]
013	Door Open: Time Length	Sets the length of time the remains opens to determine when to initiate a call. [3 to 30/ **10** / 1 minute]

5513	Parts Alarm Level Count	
001	Normal	[1 to 9999 / **300** / 1K]
	Sets the parts replacement alarm counter for the number of paper.	
002	DF	[1 to 9999 / **300** / 1K]
	Sets the parts replacement alarm counter for the number of scanned originals.	

5514	Parts Alarm	
001	Normal	[0 or 1 / **1** / -] 0: OFF, 1: ON
	Turns on or off the parts replacement alarm for the number of paper.	
002	DF	[0 or 1 / **0** / -] 0: OFF, 1: ON
	Turns on or off the parts replacement alarm for the number of scanned originals.	

5515	[SC/Alarm Setting]	*CTL	-
	With @Remote in use, these SP codes can be set to issue an SC call when an SC error occurs. If this SP is switched off, the SC call is not issued when an SC error occurs.		
001	SC Call		[0 or 1 / **1** / -] 0: Off, 1: On
002	Service Parts Near End Call		
003	Service Parts End Call		
004	User Call		[0 or 1 / **0** / -] 0: Off, 1: On
006	Communication Test Call		
007	Machine Information Notice		
008	Alarm Notice		
009	Non Genuine Toner Alarm		[0 or 1 / **1** / -] 0: Off, 1: On
010	Supply Automatic Ordering Call		[0 or 1 / **0** / -] 0: Off, 1: On
011	Supply Management Report Call		
012	Jam/Door Open Call		[0 or 1 / **1** / -] 0: Off, 1: On

5517	Failure Prediction	*CTL	-
	With @Remote in use, these SP codes can be set to issue an SC call when an SC error occurs. If this SP is switched off, the SC call is not issued when an SC error occurs.		
001	Alarm On/Off Setting		
	Enables or disables the notification alarm for the @Remote. [0 or 1 / **0** / -] 0: Off, 1: On		
002	Alarm Interval		
	Specifies the alarm interval for the @Remote. [0 to 1000 / **10** / 100 sheets/step]		

5610	Base Gamma Ctrl Pt:Execute **(D095 only)**
004	Get Factory Default
005	Set Factory Default
006	Restore Orginal Value

5611	Toner Color in 2C **(D095 only)**	
001	B-C	[0 TO 128 / **100** / 1]
002	B-M	[0 TO 128 / **100** / 1]
003	G-C	[0 TO 128 / **100** / 1]
004	G-Y	[0 TO 128 / **100** / 1]
005	R-M	[0 TO 128 / **100** / 1]
006	R-Y	[0 TO 128 / **100** / 1]

5618	Color Mode Display Selection **(D095 only)**
	This SP switches the color display for the operation panel LCD. [0 or 1 / **1** / -] 0: Domestic Japan 1: Overseas (Outside Japan)

5711	User Paper Settings Data Setup	*CTL	-
001	User Paper Settings Data UpLoad		
	Copies the paper library data of the SD card to the mainframe.		
002	User Data UpLoad		
	Copies the user paper setting data of the SD card to the mainframe.		
102	User Paper Settings Data Download		
	Copies the user paper setting data of the mainframe to the SD card in the SD slot 2. "user.mqp"		

5715	Custom Paper: Thick	*CTL	-
001 to 100	ID1 to ID100		
	Do not change these SP settings. It is because changing these SP settings may affect the user paper settings. [0 to 7 / **1** / 1]		

5716	Custom Paper: Thin	*CTL	-
001 to 100	ID1 to ID100		
	Do not change these SP settings. It is because changing these SP settings may affect the user paper settings. [0 to 7 / **1** / 1]		

5717	Custom Paper: UP/Web Info. 1: P-Type	*CTL	-
001 to 100	ID1 to ID100		
	Do not change these SP settings. It is because changing these SP settings may affect the user paper settings. [0 to 0xFFFF / **1** / 1]		

5718	Custom Paper: UP/Web Info. 2: P-Type	*CTL	-
001 to 100	ID1 to ID100		
	Do not change these SP settings. It is because changing these SP settings may affect the user paper settings. [0 to 0xFFFF / **1** / 1]		

5719	Custom Paper: UP/Web Info. 3: P-Type	*CTL	-
001 to 100	ID1 to ID100		
	Do not change these SP settings. It is because changing these SP settings may affect the user paper settings. [0 to 0xFFFF / **1** / 1]		

5720	Custom Paper: UP/Web Info. 4: P-Type	*CTL	-
001 to 100	ID1 to ID100		
	Do not change these SP settings. It is because changing these SP settings may affect the user paper settings. [0 to 0xFFFF / **1** / 1]		

5721	Custom Paper: Size Code	*CTL	-
001 to 100	ID1 to ID100		
	Do not change these SP settings. It is because changing these SP settings may affect the user paper settings. [0 to 0xFF / **1** / 1]		

5722	Custom Paper: Width (M-scan 0.1 mm)	*CTL	-
001 to 100	ID1 to ID100		
	Do not change these SP settings. It is because changing these SP settings may affect the user paper settings. [0 to 0xFFFFFFFF / **1** / 1]		

5723	Custom Paper: Length (S-scan 0.1 mm)	*CTL	-
001 to 100	ID1 to ID100		
	Do not change these SP settings. It is because changing these SP settings may affect the user paper settings. [0 to 0xFFFFFFFF / **1** / 1]		

5724	Custom Paper: MQP Version	*CTL	-
001 to 100	ID1 to ID100		
	Do not change these SP settings. It is because changing these SP settings may affect the user paper settings. [0 to 99 / **1** / 1]		

5725	Custom Paper: Data Type	*CTL	-
001 to 100	ID1 to ID100		
	Do not change these SP settings. It is because changing these SP settings may affect the user paper settings. [0 to 99 / **1** / 1]		

5789*	Custom Paper Value Initialize **DFU**
001	Custom Paper
	Specifies the target custom paper to be initialized. [0 to 100 / **0** / 1] 0: All custom paper, 1: ID1, ----, 100: ID100

5801	[Memory Clear] **NOTE:** For more information, see "NOTE 1" following "SP8-xxx" table.		
001	All Clear		
	Resets all correction data for process control and all software counters, and returns all modes and adjustments to their default values. Use this SP only after replacing the NVRAM, or after the machine has malfunctioned due to a damaged NVRAM.		
002	Engine		
	Clears the engine settings.		
003	SCS	-	-
	Clears the system settings.		
006	Copier application **(D095 only)**	-	-
	Clears the copier application settings.		
008	Printer Application	-	-
	Clears the printer application settings.		

009	Scanner Application **(D095 only)**	-	-
	Clears the scanner application settings.		
010	Web Service **(D095 only)**	-	-
	Clears the web service settings.		
011	NCS	-	-
	Initializes the system default and interface settings (IP address also), SmartDeviceMonitor for Admin, WebStatusMonitor settings, and the TELNET settings.		
014	Clear DCS Settings	-	-
	Initializes the DCS (Delivery Control Service) settings.		
015	Clear UCS Settings	-	-
	Initializes the UCS (User Information Control Service) settings.		
016	MIRS Setting	-	-
	Initializes the MIRS (Machine Information Report Service) settings.		
017	CCS	-	-
	Initializes the CCS (Certification and Charge-control Service) settings.		
018	SRM Memory Clr	-	-
	Initializes the SRM (System Resource Manager) settings.		
019	LCS Clear	-	-
	Initializes the LCS (Log Count Service) settings.		
020	WebUapl **(D095 only)**	-	-
	Initializes the webuapl settings.		
021	ECS	-	-
	Initializes the ECS settings.		

5803	Input Check	-	See Input Check: 1 in this section.
5804	Output Check	-	See Output Check in this section.

5805	Unit Initializing
	Return the each motor position to the default position.
001	Pressure Roller Lift Motor
002	PTR Lift Motor
003	ITB Black Lift Motor
004	ITB Color Lift Motor
005	Belt Centering Roller Motor
006	ITB Motor
007	Registration Gate Motor
008	Shift Roller Unit Motor
010	ACTIVATE Movement
015	De-curler Unit HP Detection
016	De-curler Unit Move:Upper Default
017	De-curler Unit Move:Lower Default

5807*	Area Selection
001	Select the area (JPN/ NA/ EU). [1 to 3 / JPN, NA or EU / 1] 1: JPN, 2: NA, 3: EU

5810	Fusing SC Cancel
001	Executes the fusing SC clear.
	When the machine issues one of the "Level A" SC codes shown below, this indicates a serious problem in the fusing unit. The machine is disabled and the operator cannot reset the SC. The machine requires servicing immediately. Select "1" and then touch [EXECUTE] release the machine for servicing.

5811*	Machine Serial
002	Display
	This SP displays the machine serial number.

5812	[Service TEL]		
001	Telephone	*CTL	-
	Sets the telephone number for a service representative. This number is printed on the Counter List, which can be printed with the user's "Counter" menu. This can be up to 20 characters (both numbers and alphabetic characters can be input).		
002	Facsimile	*CTL	-
	Sets the fax or telephone number for a service representative. This number is printed on the Counter List. This can be up to 20 characters (both numbers and alphabetic characters can be input).		
003	Supply	*CTL	-
	Displayed on the initial SP screen.		
004	Operation	*CTL	-
	Allows the service center contact telephone number to be displayed on the initial screen.		

System SP5-xxx: 2

5816	[Remote Service]	*CTL	-
001	I/F Setting		
	Selects the remote service setting. [0 to 2 / **2** / 1 /step] 0: Remote service off 1: CSS remote service on 2: @Remote remote service on		
002	CE Call		
	Performs the CE Call at the start or end of the service. [0 or 1 / **0** / 1 /step] 0: Start of the service 1: End of the service NOTE: This SP is activated only when SP 5816-001 is set to "2".		
003	Function Flag		
	Enables or disables the remote service function. [0 to 1 / **0** / 1 /step] 0: Disabled 1: Enabled		
007	SSL Disable		
	Uses or does not use the RCG certification by SSL when calling the RCG. [0 to 1 / **0** / 1 /step] 0: Uses the RCG certification 1: Does no use the RCG certification		
008	RCG Connect Timeout		
	Specifies the connect timeout interval when calling the RCG. [1 to 90 / **30** / 1 second /step]		

009	RCG Write Timeout	
	Specifies the write timeout interval when calling the RCG. [1 to 100 / **60** / 1 second /step]	
010	RCG Read Timeout	
	Specifies the read timeout interval when calling the RCG. [1 to 100 / **60** / 1 second /step]	
011	Port 80 Enable	-
	Enables/disables access via port 80 to the SOAP method. [0 or 1 / **0** / –] 0: Disabled 1: Enabled	
013	RFU Timming	
	[0 or 1 / **1** /-] 0: Always enable 1: Energy save mode	
021	RCG-C Registered	
	This SP displays the embedded RCG installation end flag. 0: Installation not completed 1: Installation completed	
022	RCG-C Regist Detail	
	This SP displays the external RCG installation status. **0**: External RCG not registered 1: External RCG registered 2: Device registered	
023	Connect Mode (N/M)	
	This SP displays and selects the embedded RCG connection method. [0 or 1 / **0** / 1 /step 0: Internet connection 1: Dial-up connection	

061	Cert. Expire Timing DFU	Proximity of the expiration of the certification.
062	Use Proxy	
	This SP setting determines if the proxy server is used when the machine communicates with the service center.	
063	Proxy Host	
	This SP sets the address of the proxy server used for communication between embedded RCG-N and the gateway. Use this SP to set up or display the customer proxy server address. The address is necessary to set up embedded RCG-N. **Note** • The address display is limited to 128 characters. Characters beyond the 128 character are ignored. • This address is customer information and is not printed in the SMC report.	
064	Proxy Port Number	
	This SP sets the port number of the proxy server used for communication between embedded RCG-N and the gateway. This setting is necessary to set up embedded RCG-N. [0 to 6553 / **0** / 1] **Note** • This port number is customer information and is not printed in the SMC report.	
065	Proxy User Name	
	This SP sets the HTTP proxy certification user name. **Note** • The length of the name is limited to 31 characters. Any character beyond the 31st character is ignored. • This name is customer information and is not printed in the SMC report.	
066	Proxy Password	
	This SP sets the HTTP proxy certification password. **Note** • The length of the password is limited to 31 characters. Any character beyond the 31st character is ignored. • This name is customer information and is not printed in the SMC report.	

067	CERT: UP State	
	Displays the status of the certification update.	
	0	The certification used by embedded RCG is set correctly.
	1	The certification request (setAuthKey) for update has been received from the GW URL and certification is presently being updated.
	2	The certification update is completed and the GW URL is being notified of the successful update.
	3	The certification update failed, and the GW URL is being notified of the failed update.
	4	The period of the certification has expired and new request for an update is being sent to the GW URL.
	11	A rescue update for certification has been issued and a rescue certification setting is in progress for the rescue GW connection.
	12	The rescue certification setting is completed and the GW URL is being notified of the certification update request.
	13	The notification of the request for certification update has completed successfully, and the system is waiting for the certification update request from the rescue GW URL.
	14	The notification of the certification request has been received from the rescue GW controller, and the certification is being stored.
	15	The certification has been stored, and the GW URL is being notified of the successful completion of this event.
	16	The storing of the certification has failed, and the GW URL is being notified of the failure of this event.
	17	The certification update request has been received from the GW URL, the GW URL was notified of the results of the update after it was completed, but an certification error has been received, and the rescue certification is being recorded.
	18	The rescue certification of No. 17 has been recorded, and the GW URL is being notified of the failure of the certification update.

068	CERT: Error	
	Displays a number code that describes the reason for the request for update of the certification.	
	0	Normal. There is no request for certification update in progress.
	1	Request for certification update in progress. The current certification has expired.
	2	An SSL error notification has been issued. Issued after the certification has expired.
	3	Notification of shift from a common authentication to an individual certification.
	4	Notification of a common certification without ID2.
	5	Notification that no certification was issued.
	6	Notification that GW URL does not exist.
069	CERT: UP	The ID of the request for certification.
083	Firm Up Status	Displays the status of the firmware update.
084	Non-HDD Firm Up	This setting determines if the firmware can be updated, even without the HDD installed. 0: Not allowed update 1: Allowed update
085	Firm Up User Check	This SP setting determines if the operator can confirm the previous version of the firmware before the firmware update execution. If the option to confirm the previous version is selected, a notification is sent to the system manager and the firmware update is done with the firmware files from the URL.
086	Firmware Size	Allows the service technician to confirm the size of the firmware data files during the firmware update execution.
087	CERT: Macro Version	Displays the macro version of the @Remote certification.
088	CERT: PAC Version	Displays the PAC version of the @Remote certification.
089	CERT: ID2 Code	Displays ID2 for the @Remote certification. Spaces are displayed as underscores (_). Asteriskes (***) indicate that no @Remote certification exists. "000000_____" indicates "Common certification".

090	CERT: Subject	Displays the common name of the @Remote certification subject. CN = the following 17 bytes. Spaces are displayed as underscores (_). Asterisks (***) indicate that no DESS exists. "000000_____" indicates "Common certification".
091	CERT: Serial Number	Displays serial number for the @Remote certification. Asterisks (***) indicate that no DESS exists.
092	CERT: Issuer	Displays the common name of the issuer of the @Remote certification. CN = the following 30 bytes. Asteriskes (***) indicate that no DESS exists.
093	CERT: Valid Start	Displays the start time of the period for which the current @Remote certification is enabled.
094	CERT: Valid End	Displays the end time of the period for which the current @Remote certification is enabled.
151	Line type Automatic Judgment	
	Press [Execute]. Setting this SP classifies the telephone line where embedded RCG-M is connected as either dial-up (pulse dial) or push (DTMF tone) type, so embedded RCG-M can automatically distinguish the number that connects to the outside line. • The current progress, success, or failure of this execution can be displayed with SP5816-152. • If the execution succeeded, SP5816-153 will display the result for confirmation and SP5816-154 will display the telephone number for the connection to the outside line.	
152	Line Type Judgment Result	

	Displays a number to show the result of the execution of SP5816-151. Here is a list of what the numbers mean. 0: Success 1: In progress (no result yet). Please wait. 2: Line abnormal 3: Cannot detect dial tone automatically 4: Line is disconnected 5: Insufficient electrical power supply 6: Line classification not supported 7: Error because fax transmission in progress ioctl() occurred. 8: Other error occurred 9: Line classification still in progress. Please wait.
153	Selection Dial/Push
	This SP displays the classification (tone or pulse) of the telephone line to the access point for embedded RCG-M. The number displayed (0 or 1) is the result of the execution of SP5816-151. However, this setting can also be changed manually. [0 to 1 / **0** / 1 /step] 0: Tone Dialing Phone, 1: Pulse Dialing Phone
154	Outside Line Outgoing Number
	The SP sets the number that switches to PSTN for the outside connection for embedded RCGM in a system that employs a PBX (internal line). • If the execution of SP5816-151 has succeeded and embedded RCG-M has connected to the external line, this SP display is completely blank. • If embedded RCG-M has connected to an internal line, then the number of the connection to the external line is displayed. • If embedded RCG-M has connected to an external line, a comma is displayed with the number. The comma is inserted for a 2 sec. pause. • The number setting for the external line can be entered manually (including commas).
156	Dial Up User Name

	Use this SP to set a user name for access to remote dial up. Follow these rules when setting a user name: • Name length: Up to 32 characters • Spaces and # allowed but the entire entry must be enclosed by double quotation marks (").
157	Dial Up Password
	Use this SP to set a password for access to remote dial up. Follow these rules when setting a user name: • Name length: Up to 32 characters • Spaces and # allowed but the entire entry must be enclosed by double quotation marks (").
161	Local Phone Number
	Use this SP to set the telephone number of the line where embedded RCG-M is connected. This number is transmitted to and used by the Call Center to return calls. Limit: 24 numbers (numbers only)
163	Access Point
	This is the telephone number of the dial-up access point for embedded RCG-M. If no setting is done for this SP code, then a preset value (determined by the country selected) is used. Default: 0 Allowed: Up to 16 numeral characters
164	Line Connecting
	This SP sets the connection conditions for the customer. This setting dedicates the line to embedded RCG-M only, or sets the line for sharing between embedded RCG-M and a fax unit. [0 or 1 / **0** / -] 0: Line shared by embedded RCG-M/Fax 1: Line dedicated to embedded RCG-M only • If this setting is changed, the copier must be cycled off and on. • SP5816-187 determines whether the off-hook button can be used to interrupt an embedded RCG-M transmission in progress to open the line for fax transaction.
173	Modem serial No.
	This SP displays the serial number registered for the embedded RCG-M.

174	Retransmission Limit		
	Normally, it is best to allow unlimited time for certification and ID2 update requests, and for the notification that the certification has been completed. However, embedded RCGM generates charges based on transmission time for the customer, so a limit is placed upon the time allowed for these transactions. If these transactions cannot be completed within the allowed time, do this SP to cancel the time restriction.		
187	FAX TX Priority		
	This SP determines whether pushing the off-hook button will interrupt an embedded RCGM transmission in progress to open the line for fax transaction. This SP can be used only if SP5816-164 is set to "0". [0 or 1/ **0** / -] 0: Disable. Setting the fax unit off-hook does not interrupt a fax transaction in progress. If the off-hook button is pushed during a embedded RCG-M transmission, the button must be pushed again to set the fax unit on-hook after the embedded RCG-M transmission has completed. 1: Enable. When embedded RCG-M shares a line with a fax unit, setting the fax unit off-hook will interrupt a embedded RCG-M transmission in progress and open the line for a fax transaction.		
200	Manual Polling	-	Executes the manual polling.
201	Regist Status		
	Displays a number that indicates the status of the @Remote service device. **0:** Neither the registered device by the embedded RCG nor embedded RCG device is set. 1: The embedded RCG device is being set. Only Box registration is completed. In this status the external RCG unit cannot answer a polling request. 2: The embedded RCG device is set. In this status the external RCG unit cannot answer a polling request. 3: The registered device by the embedded RCG is being set. In this status the embedded RCG device cannot be set. 4: The registered module by the embedded RCG has not started.		
202	Letter number	Allows entry of the number of the request needed for the embedded RCG device.	
203	Confirm Execute	Executes the inquiry request to the @Remote GateWay URL.	

204	Confirm Result		
	Displays a number that indicates the result of the inquiry executed with SP5816-203. 0: Succeeded 1: Inquiry number error 2: Registration in progress 3: Proxy error (proxy enabled) 4: Proxy error (proxy disabled) 5: Proxy error (Illegal user name or password) 6: Communication error 7: Certification update error 8: Other error 9: Inquiry executing		
205	Confirm Place		
	Displays the result of the notification sent to the device from the GW URL in answer to the inquiry request. Displayed only when the result is registered at the GW URL.		
206	Register Execute	Executes Embedded RCG Registration.	
207	Register Result		
	Displays a number that indicates the registration result. 0: Succeeded 2: Registration in progress 3: Proxy error (proxy enabled) 4: Proxy error (proxy disabled) 5: Proxy error (Illegal user name or password) 6: Communication error 7: Certification update error 8: Other error 9: Registration executing		
208	Error Code		
	Displays a number that describes the error code that was issued when either SP5816-204 or SP5816-207 was executed.		
	Cause	Code	Meaning

4

	Illegal Modem Parameter	-11001	Chat parameter error
		-11002	Chat execution error
		-11003	Unexpected error
	Operation Error, Incorrect Setting	-12002	Inquiry, registration attempted without acquiring device status.
		-12003	Attempted registration without execution of an inquiry and no previous registration.
		-12004	Attempted setting with illegal entries for certification and ID2.
		-12005	@Remote communication is prohibited. The device has an Embedded RC gate-related problem.
		-12006	A confirmation request was made after the confirmation had been already completed.
		-12007	The request number used at registration was different from the one used at confirmation.
		-12008	Update certification failed because mainframe was in use.

	Error Caused by Response from GW URL	-2385	Attempted dial up overseas without the correct international prefix for the telephone number.
		-2387	Not supported at the Service Center
		-2389	Database out of service
		-2390	Program out of service
		-2391	Two registrations for same device
		-2392	Parameter error
		-2393	External RCG not managed
		-2394	Device not managed
		-2395	Box ID for External RCG is illegal
		-2396	Device ID for External RCG is illegal
		-2397	Incorrect ID2 format
		-2398	Incorrect request number format
209	Instl Clear	Releases the machine from its embedded RCG setup.	
250	Comm Log Print	Prints the communication log.	

5821*	Remote Service Address	
002	-	Sets the IP address of the RCG (Remote Communication Gate) destination for call processing at the remote service center. [00000000h to FFFFFFFFh / - / 1]

5824	NV-RAM Upload		
	Uploads the UP and SP mode data (except for counters and the serial number) from the NVRAM to an SD card.		
001	NV-RAM Upload	#	-

5825	[NV-RAM Download]		
	Downloads the UP and SP mode data from an SD card to the NVRAM.		
001	NV-RAM Download	#	-

5828	Network Setting	
050	1284 Compatibility (Centro)	Enables or disables 1284 Compatibility. [0 or 1 / **1** / 1 / step] 0: Disabled, 1: Enabled
052	ECP (Centro)	Enables or disables ECP Compatibility. [0 or 1 / **1** / 1 / step] 0: Disabled, 1: Enabled **Note** • This SP is activated only when SP5-828-50 is set to "1".
065	Job Spooling	Enables/disables Job Spooling. [0 or 1 / **0** / 1 / step] 0: Disabled, 1: Enabled
066	Job Spooling Clear: Start Time	Treatment of the job when a spooled job exists at power on. 0: ON (Data is cleared) 1: OFF (Automatically printed)
069	Job Spooling (Protocol)	Validates or invalidates the job spooling function for each protocol. 0: Validates 1: Invalidates bit0: LPR bit1: FTP bit2: IPP bit3: SMB bit4: BMLinkS bit5: DIPRINT bit6: sftp bit7: (Reserved)

090	TELNET (0: OFF 1: ON)	Enables or disables the Telnet protocol. [0 or 1 / 1 / –] 0: Disable, 1: Enable
091	Web (0: OFF 1: ON)	Enables or disables the Web operation. [0 or 1 / 1 / –] 0: Disable, 1: Enable
145	Active IPv6 Link Local Address	This is the IPv6 local address link referenced on the Ethernet or wireless LAN (802.11b) in the format: "Link Local Address" + "Prefix Length" The IPv6 address consists of a total 128 bits configured in 8 blocks of 16 bits each.
147	Active IPv6 Stateless Address 1	These SPs are the IPv6 status addresses (1 to 5) referenced on the Ethernet or wireless LAN (802.11b) in the format: "Status Address" + "Prefix Length" The IPv6 address consists of a total 128 bits configured in 8 blocks of 16 bits each.
149	Active IPv6 Stateless Address 2	
151	Active IPv6 Stateless Address 3	
153	Active IPv6 Stateless Address 4	
155	Active IPv6 Stateless Address 5	
156	IPv6 Manual Address	This SP is the IPv6 manually set address referenced on the Ethernet or wireless LAN (802.11b) in the format: "Manual Set Address" + "Prefix Length" The IPv6 address consists of a total 128 bits configured in 8 blocks of 16 bits each.
158	IPv6 Gateway Address	This SP is the IPv6 gateway address referenced on the Ethernet or wireless LAN (802.11b). The IPv6 address consists of a total 128 bits configured in 8 blocks of 16 bits each. These notations can be abbreviated. See "Note: IPV6 Addresses" below this table.

	Note: IPV6 Addresses Ethernet and the Wireless LAN (802.11) reference the IPV6 "Link-Local address + Prefix Length". The IPV6 address consists of 128 bits divided into 8 blocks of 16 bits: aaaa:bbbb:cccc:dddd:eeee:ffff:gggg:hhhh: The prefix length is inserted at the 17th byte (Prefix Range: 0x0 to 0x80). The initial setting is 0x40 (64). For example, the data: "2001123456789012abcdef012345678940h" is expressed: "2001:1234:5678:9012:abcd:ef01:2345:6789": prefixlen 64 However, the actual IPV6 address display is abbreviated according to the following rules.	
	Rules for Abbreviating IPV6 Addresses The IPV6 address is expressed in hexadecimal delimited by colons (:) with the characters "0123456789abcdefABCDEF". 1. A colon is inserted as a delimiter every 4th hexadecimal character. fe80:0000:0000:0000:0207:40ff:0000:340e 2. The notations can be abbreviated by eliminating zeros where the MSB and digits following the MSB are zero. The example in "2" above, then, becomes fe80:0:0:0207:40ff:0:340e Sections where only zeros exist can be abbreviated with double colons (::). This abbreviation can be done also where succeeding sections contain only zeros (but this can be done only at one point in the address). The example in "2" and "3" above then becomes: fe80::207:40ff:0:340e (only the first null sets zero digits are abbreviated as "::") -or- fe80:0:0:0:207:40ff::340e (only the last null set before "340e" is abbreviated as "::")	
161	IPv6 Stateless Auto Setting	Enable or disables the automatic setting for IPv6 stateless.

System SP5-xxx: 3

5832	[HDD] HDD Initialization	*CTL	-
	Enter the SP number for the partition to initialize, then press #. When the execution ends, cycle the machine off and on.		
001	HDD Formatting (All)		
002	HDD Formatting (IMH)		
003	HDD Formatting (Thumbnail)		
004	HDD Formatting (Job Log)		
005	HDD Formatting (Printer Fonts)		
006	HDD Formatting (User Info.)		
007	Mail RX Data		
008	Mail TX Data		
009	HDD Formatting (Data for Design)		
010	HDD Formatting (Log)		
011	HDD Formatting (Ridoc I/F DeskTopBinder)		

5836	Capture Settings **(D095 only)**	*CTL
001	Capture Function (0:Off 1:On)	**0**: Disable, 1: Enable
	With this function disabled, the settings related to the capture feature cannot be initialized, displayed, or selected.	
002	Panel Setting	**0**: Displayed, 1: Not displayed
	Displays or does not display the capture function buttons.	
	5836-71 to 5836-76, Copier and Printer Document Reduction The following 6 SP modes set the default reduction for stored documents sent to the document management server via the MLB. Enabled only when optional MLB (Media Link Board) is installed.	

071	Reduction for Copy Color	0: 1to-1, 1: 1/2, **2: 1/3**, 3: 1/4
072	Reduction for Copy B&W Text	**0: 1to-1**, 1: 1/2, 2: 1/3, 3: 1/4, 6: 2/3
073	Reduction for Copy B&W Other	**0: 1to-1**, 1: 1/2, 2: 1/3, 3: 1/4, 6: 2/3
074	Reduction for Printer Color	0: 1to-1, 1: 1/2, **2: 1/3**, 3: 1/4
075	Reduction for Printer B&W	**0: 1to-1**, 1: 1/2, 2: 1/3, 3: 1/4, 6: 2/3
076	Reduction for Printer B&W HQ	**0: 1to-1**, 1: 1/2, 2: 1/3, 3: 1/4
077	Reduction for Printer Color 1200 dpi	1: 1/2, 3: 1/4, **4: 1/6**, 5: 1/8
078	Reduction for Printer B&W 1200 dpi	**1: 1/2**, 3: 1/4, 4: 1/6, 5: 1/8
	5836-81 to 5836-86, Stored document format The following 6 SP modes set Sets the default format for stored documents sent to the document management server via the MLB. Enabled only when optional MLB (Media Link Board) is installed.	
081	Format for Copy Color	**0: JFIF/JPEG**, 1: TIFF/MMR, 2: TIFF/MH, 3: TIFF/MR
082	Format for Copy B&W Text	0: JFIF/JPEG, **1: TIFF/MMR**, 2: TIFF/MH, 3: TIFF/MR
083	Format for Copy B&W Other	0: JFIF/JPEG, **1: TIFF/MMR**, 2: TIFF/MH, 3: TIFF/MR
084	Format for Printer Color	**0: JFIF/JPEG**, 1: TIFF/MMR, 2: TIFF/MH, 3: TIFF/MR
085	Format for Printer B&W	0: JFIF/JPEG, **1: TIFF/MMR**, 2: TIFF/MH, 3: TIFF/MR
086	Format for Printer B&W HQ	0: JFIF/JPEG, 1: TIFF/MMR, **2: TIFF/MH**, 3: TIFF/MR
091	Default for JPEG	[5 to 95 / **50** / 1 /step]
	Sets the JPEG format default for documents sent to the document management server via the MLB with JPEG selected as the format. Enabled only when optional MLB (Media Link Board) is installed.	

5840	[IEEE 802.11b]		
006	Channel Max	*CTL	[1 to 11 or 13 / 11 or 13 / **1** /step] Europe/Asia: 1 to 13 NA/ Asia: 1 to 11
	Sets the maximum number of channels available for data transmission via the wireless LAN. The number of channels available varies according to location. The default settings are set for the maximum end of the range for each area. Adjust the upper 4 bits to set the maximum number of channels. DFU **Note** • Do not change the setting.		
007	Channel Min	*CTL	[1 to 11 or 13 / **1** / 1 /step] Europe: 1 to 13 NA/ Asia: 1 to 11
	Sets the minimum number of channels available for data transmission via the wireless LAN. The number of channels available varies according to location. The default settings are set for the minimum end of the range for each area. Adjust the lower 4 bits to set the minimum number of channels. DFU **Note** • Do not change the setting.		
011	WEP key Select	*CTL	
	Default [00000000]		

5841	Supply Name Setting	
	Press the User Tools key. These names appear when the user presses the Inquiry button on the User Tools screen.	
001	Toner Name Setting: Black	
002	Toner Name Setting: Cyan	
003	Toner Name Setting: Yellow	
004	Toner Name Setting: Magenta	
008	Paste Name	

011	StapleStd1	
012	StapleStd2	
013	StapleStd3	Standard Staples
014	StapleStd4	
021	StapleBind1	
022	StapleBind2	Booklet Staples
023	StapleBind3	
031	Ring Name (50/Black)	Ring Binders (D392)
032	Ring Name (50/White)	
033	Ring Name (100/Black)	
034	Ring Name (100/White)	

5842	GWWS Analysis Mode **(D095 only: DFU)**		
001	Setting 1	*CTL	Default: **00000000** – do not change Netfiles: Jobs to be printed from the document server using a PC and the DeskTopBinder software
002	Setting 2	*CTL	Adjusts the debug program modesetting. Bit7: 5682 mmseg-log setting 0: Date/Hour/Minute/Second 1: Minute/Second/Msec. 0 to 6: Not used

5844	USB		
001	Transfer Rate	*CTL	0x01: Full speed **0x04:** Auto Change Adjusts the USB transfer rate.
002	Vendor ID	*CTL	Displays the vendor ID. DFU
003	Product ID	*CTL	Displays the product ID. DFU

004	Device Release Number	*CTL	Displays the development release version number. DFU

5845	Delivery Server Setting **(D095 only)**	*CTL	-
	Provides items for delivery server settings.		
001	FTP Port No.	[0 to 65535 / **3670** / 1 /step]	
	Sets the FTP port number used when image files to the Scan Router Server.		
002	IP Address (Primary)	Range: **000.000.000.000** to 255.255.255.255	
	Use this SP to set the Scan Router Server address. The IP address under the transfer tab can be referenced by the initial system setting.		
006	Delivery Error Display Time	[0 to 999 / **300** / 1 second /step]	
	Use this setting to determine the length of time the prompt message is displayed when a test error occurs during document transfer with the NetFile application and an external device.		
008	IP Address (Secondary)	Range: **000.000.000.000** to 255.255.255.255	
	Specifies the IP address assigned to the computer designated to function as the secondary delivery server of Scan Router. This SP allows only the setting of the IP address without reference to the DNS setting.		
009	Delivery Server Model	[0 to 4/ **0** / 1 /step]	
	Allows changing the model of the delivery server registered by the I/O device. 0: Unknown 1: SG1 Provided 2: SG1 Package 3: SG2 Provided 4: SG2 Package		

010	Delivery Svr Capability	[0 to 255 / **0** / 1 /step]
	Changes the capability of the registered I/O device.	
	Bit7 = 1 Comment information exits	
	Bit6 = 1 Direct specification of mail address possible	
	Bit5 = 1 Mail RX confirmation setting possible	
	Bit4 = 1 Address book automatic update function exists	
	Bit3 = 1 Fax RX delivery function exists	
	Bit2 = 1 Sender password function exists	
	Bit1 = 1 Function to link MK-1 user and Sender exists	
	Bit0 = 1 Sender specification required (if set to 1, Bit6 is set to "0")	
011	Delivery Svr Capability (Ext)	[0 to 255 / **0** / 1 /step]
	Changes the capability of the registered that the I/O device registered.	
	Bit7 = 1 Address book usage limitation (Limitation for each authorized user) Bit6 = 1 RDH authorization link Bit5 to 0: Not used	
013	Server Scheme (Primary) **DFU**	
	This is used for the scan router program.	
014	Server Port Number (Primary) **DFU**	[1 to 65535 / **80** / 1 /step]
	This is used for the scan router program.	
015	Server URL Path (Primary) **DFU**	
	This is used for the scan router program.	
016	Server Scheme (Secondary) **DFU**	
	This is used for the scan router program.	
017	Server Port Number (Secondary) **DFU**	[1 to 65535 / **80** / 1 /step]
	This is used for the scan router program.	

018	Server URL Path (Secondary) **DFU**
	This is used for the scan router program.
019	Capture Server Scheme **DFU**
	-
020	Capture Server Port Number **DFU**
	-
021	Capture Server URL Path **DFU**
	-
022	Rapid Sending Control
	Enables or disables the prevention function for the continuous data sending error. [0 to 1 / **0** / -] 0: Disable, 1: Enable

5846	UCS Settings	*CTL	-
001	Machine ID (For Delivery Server) **(D095 only)**	Displays ID	
	Displays the unique device ID in use by the delivery server directory. The value is only displayed and cannot be changed. This ID is created from the NIC MAC or IEEE 1394 EUI. The ID is displayed as either 6-byle or 8-byte binary.		
002	Machine ID Clear (For Delivery Server) **(D095 only)**	Clears ID	
	Clears the unique ID of the device used as the name in the file transfer directory. Execute this SP if the connection of the device to the delivery server is unstable. After clearing the ID, the ID will be established again automatically by cycling the machine off and on.		
003	Maximum Entries **(D095 only)**	[2000 to 20000/ **2000** /1 /step]	
	Changes the maximum number of entries that UCS can handle. If a value smaller than the present value is set, the UCS managed data is cleared, and the data (excluding user code information) is displayed.		

006	Delivery Server Retry Timer **(D095 only)**	[0 to 255 / **0** / 1 /step]
	Sets the interval for retry attempts when the delivery server fails to acquire the delivery server address book.	
007	Delivery Server Retry Times **(D095 only)**	[0 to 255 / **0** / 1 /step]
	Sets the number of retry attempts when the delivery server fails to acquire the delivery server address book.	
008	Delivery Server Maximum Entries **(D095 only)**	[2000 to 50000 / **2000** / 1/step]
	Sets the maximum number account entries of the delivery server user information managed by UCS.	
010	LDAP Search Timeout	[1 to 255 / **60** / 1 /step]
	Sets the length of the timeout for the search of the LDAP server.	
041	Fill Addr Acl Info.	
	This SP must be executed immediately after installation of an HDD unit in a basic machine that previously had no HDD. The first time the machine is powered on with the new HDD installed, the system automatically takes the address book from the NVRAM and writes it onto the new HDD. However, the new address book on the HDD can be accessed only by the system administrator at this stage. Executing this SP by the service technician immediately after power on grants full address book access to all users. Procedure 1. Turn the machine off. 2. Install a new HDD. 3. Turn the machine on. 4. The address book and its initial data are created on the HDD automatically. 5. However, at this point the address book can be accessed by only the system administrator or key operator. 6. Enter the SP mode and do SP5846-041. After this SP executes successfully, any user can access the address book.	

043	Addr Book Media	Displays the slot number where an address book data is in. [0 to 30 / - /1] 0: Unconfirmed 1: SD Slot 1 2: SD Slot 2 4: USB Flash ROM 20: HDD 30: Nothing
047	Initialize Local Addr Book	Clears the local address book information, including the user code.
048	Initialize Delivery Addr Book **(D095 only)**	Clears the distribution address book information, except the user code.
049	Initialize LDAP Addr Book	Clears the LDAP address book information, except the user code.
050	Initialize All Addr Book	Clears all directory information managed by UCS, including all user codes.
051	Backup All Addr Book	Uploads all directory information to the SD card.
052	Restore All Addr Book	Downloads all directory information from the SD card.
053	Clear Backup Info	Deletes the address book data from the SD card in the service slot. Deletes only the files that were uploaded from this machine. This feature does not work if the card is write-protected. **Note** • After you do this SP, go out of the SP mode, and then turn the power off. • Do not remove the SD card until the Power LED stops flashing.

060	Search Option This SP uses bit switches to set up the fuzzy search options for the UCS local address book. Bit: Meaning 0: Checks both upper/lower case characters 1: Japan Only 2: Japan Only 3: Japan Only 4 to 7: Not Used	
062	Complexity Option 1 Use this SP to set the conditions for password entry to access the local address book. Specifically, this SP limits the password entry to **upper case** and sets the length of the password. [0 to 32 / **0** / 1 /step] **Note** • This SP does not normally require adjustment. • This SP is enabled only after the system administrator has set up a group password policy to control access to the address book.	
063	Complexity Option 2 **DFU**	
064	Complexity Option 3 **DFU**	
065	Complexity Option 4 **DFU**	
091	FTP Auth Port Setting **(D095 only)**	Specifies the FTP port for getting a distribution server address book that is used in the identification mode. [0 to 65535 / **3671** / 1 /step]
094	Encryption Stat	Shows the status of the encryption function for the address book data.

5847	Rep Resolution Reduction **(D095 only)**	*CTL	-
	SP5847-1 through SP5847-3 changes the default settings of image data transferred externally by the Net File page reference function. [0 to 5 / **2** / 1 /step] SP5847-21 sets the default for JPEG image quality of image files handled by NetFile. "Net files" are jobs to be printed from the document server using a PC and the DeskTopBinder software.		
001	Rate for Copy Color		0: 1x, 1: 1/2x, **2: 1/3x**, 3: 1/4x, 4: 1/6x, 5: 1/8x
002	Rate for Copy B&W Text		0: 1x, 1: 1/2x, **2: 1/3x**, 3: 1/4x, 4: 1/6x, 5: 1/8x
003	Rate for Copy B&W Other		0: 1x, 1: 1/2x, **2: 1/3x**, 3: 1/4x, 4: 1/6x, 5: 1/8x
004	Rate for Printer Color		0: 1x, 1: 1/2x, **2: 1/3x**, 3: 1/4x, 4: 1/6x, 5: 1/8x
005	Rate for Printer B&W		**0: 1x**, 1: 1/2x, 2: 1/3x, 3: 1/4x, 4: 1/6x, 5: 1/8x
006	Rate for Printer Color 1200 dpi		0: 1x, 1: 1/2x, 2: 1/3x, 3: 1/4x, **4: 1/6x**, 5: 1/8x
007	Rate for Printer B&W 1200 dpi		0: 1x, **1: 1/2x**, 2: 1/3x, 3: 1/4x, 4: 1/6x, 5: 1/8x
021	Network Quality Default for JPEG		
	Sets the default value for the quality of JPEG images sent as NetFile pages. This function is available only with the MLB (Media Link Board) option installed. [5 to 95 / **50** / 1 /step]		

5848	Web Service **(D095 only)**	*CTL	-
	SP5848-2 sets the 4-bit switch assignment for the access control setting. Setting of 0001 has no effect on access and delivery from Scan Router. SP 5848-100 sets the maximum size allowed for downloaded images. The default is equal to 1 gigabyte.		
002	Access Ctrl: Repository (only Lower 4 bits)	0000: No access control 0001: Denies access to DeskTop Binder. **0010**: No writing control	
003	Access Ctrl: Doc. Svr. Print (Lower 4 bits)	Switches access control on and off. **0000**: No access control 0001: Denies access to DeskTop Binder.	
004	Access Ctrl: udirectory (only Lower 4 bits)		
009	Access Ctrl: Job Ctrl (Lower 4 bits)		
011	Access Ctrl: Device management (Lower 4 bits)		
021	Access Ctrl: Delivery (Lower 4 bits)		
022	Access Ctrl: uadministration (Lower 4bits)		
099	Repository: Download Image Setting	**DFU**	
100	Repository: Download Image Max. Size	Specifies the max size of the image data that the machine can download. [1 to 1024 / **1024** / 1 MB /step]	
210	Setting: Log Type: Job 1	-	
211	Setting: Log Type: Job 2	-	
212	Setting: Log Type: Access	-	
213	Setting: Primary Srv	-	
214	Setting: Secondary Srv	-	

215	Setting: Start Time	-
216	Setting: Interval Time	-
217	Setting: Timing	-

5849	[Installation Date]	*CTL	-
001	Display	The "Counter Clear Day" has been changed to "Installation Date" or "Inst. Date".	
002	Switch to Print	Determines whether the installation date is printed on the printout for the total counter. [0 to 1 / **1** / -] 0: OFF (No Print) 1: ON (Print)	
003	Total Counter	[0 or 99999999 / - / -]	

5851	[Bluetooth Mode]
	Sets the operation mode for the Bluetooth Unit. Press either key. [**0:Public**] [1: Private]

5853	Stamp Data Download **(D095 only)**
	Use this SP to download the fixed stamp data stored in the firmware of the ROM and copy it to the HDD. This SP can be executed as many times as required. This SP must be executed after replacing or formatting the hard disks. **Note** • This SP can be executed only with the hard disks installed.

5856	Remote ROM Update		
	Allows the technician to upgrade the firmware using a local port (IEEE1284) when updating the remote ROM.		
002	Local Port	*CTL	[0 to 1 / **0** / 1/step] 0: Disable 1: Enable

5857	[Save Debug Log]	*CTL	-
001	On/Off (1:ON 0:OFF)	0: OFF, 1: ON	
	Switches the debug log feature on and off. The debug log cannot be captured until this feature is switched on.		
002	Target (2: HDD 3: SD)	2: HDD, 3: SD Card	
	Selects the storage device to save debug logs information when the conditions set with SP5-858 are satisfied. [2 to 3 / **2** / 1 /step]		
005	Save to HDD		
	Saves the debug log of the input SC number in memory to the HDD. A unique file name is generated to avoid overwriting existing file names on the SD Card. Up to 4MB can be copied to an SD Card. 4 MB segments can be copied one by one to each SD Card.		
006	Save to SD Card		
	Saves the debug log of the input SC number in memory to the SD card.		
009	HDD to SD Card Latest		
010	HDD to SD Card Any		
011	Erase HDD Debug Data		
012	Erase SD Card Debug Data		
013	Free Space on SD Card		
014	Copy SD to SD (Latest 4MB)		
015	Copy SD to SD (Latest 4MB Any)		
016	Make HDD Debug		
017	Make SD Debug		

5858	[Debug Log Save: SC]	*CTL	-
	These SPs select the content of the debugging information to be saved to the destination selected by SP5857-002. SP5858-3 stores one SC specified by number. Refer to Section 4 for a list of SC error codes.		
001	Engine SC Error	Turns on/off the debug save for SC codes generated by copier engine errors. [0 or 1 / **0** / 1/ step] 0: OFF, 1: ON	
002	Controller SC Error	Turns on/off the debug save for SC codes generated by GW controller errors. [0 or 1 / **0** / 1/ step] 0: OFF, 1: ON	
003	Any SC Error	[0 to 65535 / **0** / 1 /step]	
004	Jam	Turns on/off the debug save for jam errors. [0 or 1 / **0** / 1/ step] 0: OFF, 1: ON	

5859	[Debug Save Key No.]	*CTL	-
001	Key 1	These SPs allow you to set up to 10 keys for log files for functions that use common memory on the controller board. [0 to 9999999 / **0** / –]	
002	Key 2		
003	Key 3		
004	Key 4		
005	Key 5		
006	Key 6		
007	Key 7		
008	Key 8		
009	Key 9		
010	Key 10		

5860	[SMTP/POP3/IMAP4]	*CTL	-
020	Partial Mail Receive Timeout	[1 to 168 / **72** / –]	
	Sets the amount of time to wait before saving a mail that breaks up during reception. The received mail is discarded if the remaining portion of the mail is not received during this prescribed time.		
021	MDN Response RFC2298 Compliance	[0 to 1 / **1** / –]	
	Determines whether RFC2298 compliance is switched on for MDN reply mail. 0: No 1: Yes		
022	SMTP Auth. From Field Replacement	[0 to 1 / **0** / –]	
	Determines whether the FROM item of the mail header is switched to the validated account after the SMTP server is validated. 0: No. "From" item not switched. 1: Yes. "From item switched.		
025	SMTP Auth. Direct Setting	[0 or 1 / **0** / –]	
	Selects the authentication method for SMPT. Bit switch: • Bit 0: LOGIN • Bit 1: PLAIN • Bit 2: CRAM MD5 • Bit 3: DIGEST MD5 • Bit 4 to 7: Not used **Note** • This SP is activated only when SMTP authorization is enabled by UP mode.		
026	S/MIVE: MIME Header Setting	Selects the MIME header type of an E-mail sent by S/MIME. [0 to 2 / **0** / 1] 0: Microsoft Outlook Express standard 1: Internet Draft standard 2: RFC standard	

5866	E-mail Alert Not Used

001	Report Validity	Enables or disables the E-mail alert function. [0 or 1 / **0** / –] 0: Enabled, 1: Disabled	
005	Add Date Field	*CTL	Adds or does not add the date field to the header of the alert mail. [0 or 1 / **0** / –] 0: Not added, 1: Added

5870	Common Key Info Writing		
001	Writing	*CTL	Writes to flash ROM the common proof for validating the device for @Remote specifications.
003	Initialize	*CTL	Initializes the authentication data (used for @Remote) in the memory.

5873	SD Card Appli Move	
001	Move Exec	This SP copies the application programs from the original SD card in SD card slot 2 to an SD card in SD card slot 1.
002	Undo Exec	This SP copies back the application programs from an SD card in SD Card Slot 1 to the original SD card in SD card slot 2. Use this menu when you have mistakenly copied some programs by using "Move Exec" (SP5873-1).

5875	SC Auto Reboot	
	This SP determines whether the machine reboots automatically when an SC error occurs. **Note** • The reboot does not occur for Type A SC codes.	
001	Reboot Setting	[0 to 1/ **0** / 1] 0: The machine reboots automatically when the machine issues an SC error and logs the SC error code. If the same SC occurs again, the machine does not reboot. 1: The machine does not reboot when an SC error occurs.
002	Reboot Type	[0 to 1 / **0** / 1] 0: Manual reboot, 1: Automatic reboot

5878	Option Setup		
001	Option Setup	*CTL	Enables the Data Overwrite Security unit. Press "EXECUTE" on the operation panel. Then turn the machine off and on.
002	HDD Encryption	Installs the HDD Encryption unit.	

5881	Fixed Phase Block Erasing **DFU**
	Detects fixed phase.

5885*	Set WIM Function	*CTL
020	DocSvr Acc Ctrl	Allows or disallows the functions of web image monitor. **0**: OFF, 1: ON
	Bit: 0: Forbid all document server access 1: Forbid user mode access 2: Forbid print function 3: Forbid Fax 4: Forbid scan sending 5: Forbid download 6: Forbid delete 7: Forbid guest user	
050	DocSvr Format	
	Selects the display type for the document box list. [0 to 2 / **0** / 1] 0: Thumbnail, 1: Icon, 2: Details	
051	DocSvr Trans	
	Sets the number of documents to be displayed in the document box list. [5 to 20 / **10** / 1]	
100	Set Signature	

101	Set Encryption
	Determines whether the scanned documents with the WIM are encrypted when they are transmitted by an e-mail. [0 to 1 / **0** / 1] 0: Not encrypted, 1:Encryption
200	Detect Mem Leak
201	DocSvr Timeout

5886	Permit ROM Updating **DFU**		
	This SP determines whether the ROM can be updated.		
001	-	*CTL	[0 or 1 / **0** / 1/step] 0: ON, 1: OFF

5887	SD Get Counter
	This SP sends a text file to an SD card inserted in SD card Slot 2 (upper slot). The operation stores. The file is stored in a folder created in the root directory of the SD card called SD_COUNTER. The file is saved as a text file (*.txt) prefixed with the number of the machine. 1. Insert the SD card in SD card Slot 2 (upper slot). 2. Select SP5887 then touch [EXECUTE]. 3. Touch [Execute] in the message when you are prompted.

5896*	Copy/Printer Priority	*CTL
	Selects the priority function. This SP optimizes the memory partition for the selected function. [0 or 1 / **0** / -] 0: Copy priority, 1: Printer priority	

5907	Plug & Play Maker/Model Name
	Selects the brand name and the production name for Windows Plug & Play. This information is stored in the NVRAM. If the NVRAM is defective, these names should be registered again. After selecting, press the "Original Type" key and "#" key at the same time. When the setting is completed, the beeper sounds five times.
	[0 to 23 / **-** / 1 step] **FA**

5913	Switchover Permission Time **(D095 only)**		
002	Print Application Timer	*CTL	[3 to 30 / **3** / 1 second /step]
	Sets the amount of time to elapse while the machine is in standby mode (and the operation panel keys have not been used) before another application can gain control of the display.		

5919	HDD Encryption Setting	*CTL	
001	State Confirm	-	
002	Execute Update	Execute	
003	Release	Execute	

5967	Copy Server Set Function **(D095 only)**	*CTL	**0**: ON, 1: OFF
001	Enables and disables the document server. This is a security measure that prevents image data from being left in the temporary area of the HDD. After changing this setting, you must switch the main switch off and on to enable the new setting.		

5974*	Cherry Server
	Selects which version of the Scan Router application program, "Light" or "Full" (Professional) is installed. [0 or 1 / **0** / -]

5985	Device Setting	
	The NIC and USB support features are built into the GW controller. Use this SP to enable and disable these features. In order to use the NIC and USB functions built into the controller board, these SP codes must be set to "1".	
001	On Board NIC	[0 to 2 / **0** / 1 /step] 0: Disable, 1: Enable, 2: Function limitation When the "Function limitation" is set, "On board NIC" is limited only for the NRS or LDAP/NT authentication. **Note** • Other network applications than @Remote or LDAP/NT authentication are not available when this SP is set to "2". Even though you can change the initial settings of those network applications, the settings do not work
002	On Board USB	[0 or 1 / **0** / 1/step] 0: Disable, 1: Enable

5988	[Service Contract Setting]		
001	Including Toner/Excluding Toner	*CTL	**[32: Excluding Toner]** [33: Including Toner]
	Selects the contract type.		

5990	[SP print mode]		
	Prints out the SMC sheets.		
001	All (Data List)	-	-
002	SP (Mode Data List)	-	
003	User Program Data	-	
004	Logging Data	-	
005	Diagnostic Report	-	
006	Non-Default	-	
007	NIB Summary	-	

008	Capture Log	-	
021	Copier User Program	-	
022	Scanner SP	-	
023	Scanner User Program	-	
024	SDK/J Summary	-	
025	SDK/J Application Info	-	

5999	Firmware Update
001	Engine
	Copy the SP data for @Remote on the controller to the SP data on the engine board.

System SP6-xxx

SP6-xxx Peripherals

6006*	DF Registration Adjustment **(D095 only)**	
001	Side-to-Side Regist:Front	Adjusts the side-to-side registration of originals with the ADF. [-3 to 3 / **0** / 0.1 mm]
002	Side-to-Side Regist:Rear	
003	LeadingEdge(ThinOriginal)	Adjusts the amount of paper buckle to correct original skew. [-10 to 10 / **0** / 0.1 step]
005	LeadingEdge(Duplex-1st)	Adjusts the amount of paper buckle to correct original skew for the front and rear sides. [-29 to 29 / **0** / 0.1 step]
006	LeadingEdge(Duplex-2nd)	

6007	ADF Input Check **(D095 only)**
	(☛page 822 "Input Check: 4")

6008	ADF Output Check **(D095 only)**
	(☛page 840 "Output Check")

6009	DFFreeRun **(D095 only)**	
002	[0 or 1 / **0** / -]	This SP does an ADF free run in duplex original mode.

6015*	ADF Scale Seting **(D095 only)**
001	Selects the ADF scale setting. [0 or 1 / **0** / -] 0: EXP SCALE 1: DOM SCALE

6019*	ADF Motor Speed Auto Adjustment **(D095 only)**

001	Turns on or off the automatic speed adjustment of the ADF motor. [0 or 1 / **0** / -] 0: On, 1: Off

6020*	ADF Motor Speed Adjustment **(D095 only)**
001	Turns on or off the speed adjustment of the ADF motor. [0 or 1 / **0** / -]

6100*	Staple Position Adjustment	
001	(A3-Lengthwise)	[-1 to 1 / **0** / 0.5 mm]
002	(B4-Lengthwise)	
003	(A4-Lengthwise)	
004	(A4-Sideways)	
005	(B5-Lengthwise)	
006	(B5-Sideways)	
007	(DLT-Lengthwise)	
008	(LG-Lengthwise)	
009	(LT-Lengthwise)	
010	(LT-Sideways)	
011	(Others)	

6101*	Punch Hole Position Adjustment	
001	JPN/EU: 2-Hole	[-4 to 4 / **0** / 0.5 mm]
002	JPN/NA: 3-Hole	
003	EU: 4-Hole	
004	NA: 4-Hole	
005	NA: 2-Hole	

6102*	Fine Adjust Stapler Jogger Fences	
	Use this SP code to adjust the positions of the jogger fences when the pages are aligned (jogged) horizontally in the stapling tray for corner stapling in the Finisher B830. These jogger fences close in on the sides of the stack on the paper tray. These side fences move in and out perpendicular to the direction of paper feed. • The higher the setting, the narrower the jogger span and the smaller the gaps between the fences and the edges of the paper. Stacking is tighter. • The lower the setting, the wider the jogger span and the wider the gaps between the fences and the edges of the paper. Stacking is not as precise.	
001	A3 Lengthwise	The settings are done for each paper size. SEF denotes "Short Edge Feed". LEF denotes "Long Edge Feed". [–1.0 to 1.0 / **0** / 0.5 mm]
002	B4 SEF	
003	A4 SEF	
004	A4 LEF	
005	B5 SEF	
006	B5 LEF	
007	DLT	
008	LG	
009	LT SEF	
010	LT Sideways	
011	Others	

6103*	Adjust Output Jog Position
	Use this SP code to adjust the positions of the jogger fences when the pages are aligned (jogged) horizontally in the stapling tray for stapling in the Booklet Finisher B836. The jogger fences close in on the sides of the stack on the paper tray. These side fences move in and out perpendicular to the direction of paper feed. [–1.5 to 1.5 / **0** / 0.1 mm] • The higher the setting, the narrower the jogger span and the smaller the gaps between the fences and the edges of the paper. Stacking is tighter. • The lower the setting, the wider the jogger span and the wider the gaps between the fences and the edges of the paper. Stacking is not as tight.

001	A3 SEF	The settings are done for each paper size. SEF denotes "Short Edge Feed". LEF denotes "Long Edge Feed".
002	B4 SEF	
003	A4 SEF	
004	A4 LEF	
005	A5 SEF	
006	A5 LEF	
007	B5 SEF	
008	B5 LEF	
009	DLT	
010	LG	
011	LT SEF	
012	LT LEF	
013	HLT SEF	
014	HLT LEF	
016	Other	

6104*	Pre-Stack Adjustment	
001	A4 LEF	Set the number of sheets for pre-stacking. [0 to 2 / **2** / 2 sheets]
002	B5 LEF	
003	LT LEF	

6105	Adj Leading Edge Stopper Pressure	
001	A4 LEF	[–2.5 to 5.0 / **0** / 0.1 mm]
002	B5 LEF	[–2.5 to 1.0 / **0** / 0.1 mm]
003	LT LEF	[–2.5 to 5.0 / **0** / 0.1 mm]

6106*	Staple Jogging Repeat Settings

	Allows you to increase by 1 the number of times the stack is jogged on the stapling tray. [0 or 1 / **0** / 1 time]

6107*	Staple Tray Jog Off/On	
	Allows you to switch jogging on the stapling tray off and on for the paper sizes listed below.	
001	A3 SEF 0:On 1:Off	The default for each paper size is "**0**" (On)
002	B4 SEF 0:On 1:Off	
003	A4 SEF 0:On 1:Off	
004	A4 LEF 0:On 1:Off	
005	A5 SEF 0:On 1:Off	
006	B5 SEF 0:On 1:Off	
007	B5 LEF 0:On 1:Off	
008	DLT SEF 0:On 1:Off	
009	LG SEF 0:On 1:Off	
010	LT SEF 0:On 1:Off	
011	LT LEF 0:On 1:Off	
012	HLT SEF 0:On 1:Off	
013	Other 0:On 1:Off	

6112	Finisher Input Check
	Displays the signals received from sensors and switches of the finisher. (☛page 822 "Input Check: 4")

6113	Finisher Output Check
	Turn on the electrical components of the finisher individually for test purposes. (☛page 840 "Output Check")

6200	Adj Booklet Stapling Position

	Use this SP to adjust the stapling position of the booklet stapler when paper is stapled and folded in the Booklet Finisher SR5020 (D434).	
001	A3 SEF	[–2.0 to 2.0 / **0** / 0.2 mm] + Value: Shifts staple position toward the crease. – Value: Shifts staple position away from the crease. 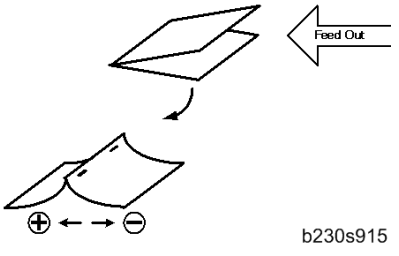
002	B4 SEF	
003	A4 SEF	
004	B5 SEF	
005	12" x 18" SEF	
006	13" x 19" SEF	
007	DLT	
008	LG	
009	LT SEF	
010	Other	

6201	Adjust Booklet Fold Position	
	This SP corrects the folding position when paper is stapled and folded in the Booklet Finisher SR5020 (D434).	
001	A3 SEF	[–2.0 to 2.0 / **0** / 0.2 mm] + Value: Shifts staple position toward the crease. – Value: Shifts staple position away from the crease. 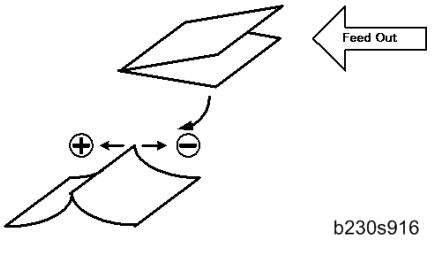
002	B4 SEF	
003	A4 SEF	
004	B5 SEF	
005	12"x18" SEF	
006	13" x 19" SEF	
007	DLT SEF	
008	LG SEF	
009	LT SEF	
010	Other	

6202	Fine Adjust Staple Jogger Fence Position	
	This SP adjusts the distance between the jogger fences and the sides of the stack on the finisher stapling tray in the Booklet Finisher SR5020 (D434). The adjustment is done perpendicular to the direction of paper feed.	
001	A3 SEF	[–1.0 to +1.0 / **0** / 0.5 mm] + Value: Increases distance between jogger fences and the sides of the stack. – Value: Decreases the distance between the jogger fences and the sides of the stack.
002	B4 SEF	
003	A4 SEF	
004	B5 SEF	
005	12"x18"	
006	13" x 19" SEF	
007	DLT SEF	
008	LG SEF	
009	LT SEF	
010	Other	

6203*	Set Number of Folds
001	Default:0 -1 to +9

6205*	Adj Booklet Stapler Jog Pawl (D434)

001	A3 SEF	[-3 to +3 / **0** / 0.2]
002	B4 SEF	
003	A4 SEF	
004	B5 SEF	
005	12 x 18 SEF	
006	13 x 19 SEF	
007	DLT	
008	LG	
009	LT SEF	
010	Other	

6208*	Adj Staple Position (D434)	
001	A3 SEF	[-1 + 1 / **0** / 0.5 mm]
002	B4 SEF	
003	A4 SEF	
004	A4 LEF	
005	B5 SEF	
006	B5 LEF	
007	DLT	
008	LG	
009	LT SEF	
010	LT LEF	
011	8-Kai SEF	
012	16-Kai SEF	
013	16-Kai LEF	
014	Other	

6209*	Adj Punch Posi Sub Scan (D434)	
001	2-Hole EU/JPN	[-3.5 +3.5 / **0** / 0.5]
002	3-Hole NA	
003	4-Hole EU	
004	4-Hole Scandinavia	
005	2-Hole NA	

6210*	Adj Punch Posi Sub Scan (D434)	
001	2-Hole EU/JPN	[-3 to +3 / **0** / 0.5 mm]
002	3-Hole NA	
003	4-Hole EU	
004	4-Hole Scandinavia	
005	2-Hole NA	

6211	Adj End Bind Jogger (D434)

001	A3 SEF	[-3 to +3 / **0** / 0.5 mm]
002	B4 SEF	
003	A4 SEF	
004	A4 LEF	
005	B5 SEF	
006	B5 LEF	
007	DLT	
008	LG	
009	LT SEF	
010	LT LEF	
011	8-Kai SEF	
012	16-Kai SEF	
013	16-Kai LEF	
014	Other	

6212*	Adj Output Jog Position (D434)

001	A3 SEF	[-2 to +2 / **0** / 0.1 mm]
002	B4 SEF	
003	A4 SEF	
004	A4 LEF	
005	A5 SEF	
006	A5 LEF	
007	B5 SEF	
008	B5 LEF	
009	DLT	
010	LG	
011	LT SEF	
012	LT LEF	
013	HLT SEF	
014	HLT LEF	
015	Other	

6213*	Adj Pre Stack Number (D434)	
001	A3 SEF	[0 to 2 / 2 / 1 Sheet]
002	B4 SEF	
003	A4 SEF	[0 to 5 / 5 / 1 Sheet]
004	A4 LEF	
005	B5 SEF	
006	B5 LEF	

007	DLT	[0 to 2 / 2 / 1 Sheet]
008	LG	
009	LTSEF	
010	LT LEF	
011	8-Kai SEF	
012	16-Kai SEF	[0 to 5 / 5 / 1 Sheet]
013	16-Kai LEF	
014	Other	

6214*	Adj Leading Edge Stopper (D434)	
001	A3 SEF	[-2.5 to +2.5 / 0 / 0.5 mm]
002	B4 SEF	
003	A4 SEF	
004	A4 LEF	
005	B5 SEF	
006	B5 LEF	
007	DLT	
008	LG	
009	LT SEF	
010	LT LEF	
011	8-Kai SEF	
012	16-Kai SEF	
013	16-Kai LEF	
014	Other	

6215*	Staple Jogging Repeat Setting (D434)

	[0 or 1/ **0** / 1] [0: Default] [1: High Precision]

6216*	Staple Tray Jog Off/On (D434)	
001	A3 SEF 0: ON 1: OFF	
002	B4 SEF 0: ON 1: OFF	
003	A4 SEF 0: ON 1: OFF	
004	A4 LEF 0: ON 1: OFF	
005	A5 SEF 0: ON 1: OFF	
006	A5 LEF 0: ON 1: OFF	
007	B5 SEF 0: ON 1: OFF	
008	B5 LEF 0: ON 1: OFF	
009	DLT 0: ON 1: OFF	
010	LG 0: ON 1: OFF	
011	LT SEF 0: ON 1: OFF	
012	LT LEF 0: ON 1: OFF	
013	HLT SEF 0: ON 1: OFF	
014	HLT LEF 0: ON 1: OFF	
015	Other 0: ON 1: OFF	

6217	Adj Top/Bottom Jog (D434)
	[-10 to +10/ 0 / 5 deg.] -10, -5, 0, +5, +10

6218	Booklet Finisher Input Check (D434)
	Displays the signals received from sensors and switches of the finisher. (☛ page 822 "Input Check: 4")

6219	Booklet Finisher Output Check (D434)
	Turn on the electrical components of the finisher individually for test purposes. (☛ page 840 "Output Check")

6221*	Adj Registration Control(D434)
001	Skew Correction 0:ON 1:OFF
	[0 or 1 / **0** / -]]

6222*	Adj Registration Buckle (D434)	
001	A4 LEF	[-2 to +2 / **0** / 0.5 mm]
002	A5 SEF	
003	A5 LEF	
004	B5 LEF	
005	LT LEF	
006	HLT SEF	
007	HLT LEF	
008	Other	

6301*	Fine Adj Z-Fold 1		
	Use this SP code to adjust the position of the first fold. For detail, see **NOTE** following this table. [–2.0 to 2.0 / **0** / 0.2 mm]		
001	A3 (1st Fold Position)	009	A3 (2nd Fold Position)
002	B4 (1st Fold Position)	010	B4 (2nd Fold Position)
003	A4 (1st Fold Position)	011	A4 (2nd Fold Position)
004	DLT (1st Fold Position)	012	DLT (2nd Fold Position)
005	LG (1st Fold Position)	013	LG (2nd Fold Position)
006	LT (1st Fold Position)	014	LT (2nd Fold Position)

007	12"x18" (1st Fold Position)	015	12"x18" (2nd Fold Position)
008	Others (1st Fold Position)	016	Others (2nd Fold Position)

NOTE

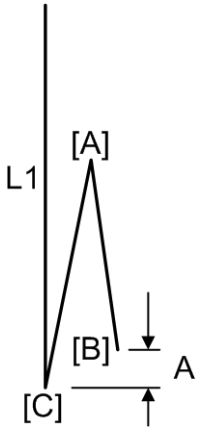

b234s904

- SP6301 001 to 008

  Adjust the position of the first fold [A]. This adjustment decreases or increases the distance (**A**) between the leading edge [B] and the crease of the 2nd fold [C].

- SP6301 009 to 016

  Adjusts the position of the 2nd fold [C] to decrease or increase the length (**L1**) of the sheet between the trailing edge [D] and the 2nd fold.

6400	Cover Inserter Input Check
	Displays the signals received from sensors and switches of the cover interposer tray. (☛ page 822 "Input Check: 4")

6401	Cover Inserter Output Check
	Turn on the electrical components of the cover interposer tray individually for test purposes. (☛page 840 "Output Check")

6500*	Pre-Punch Jog Adjustment (D392)	
001	A4 LEF	[-2 to 2 / **0** / 0.1 mm]
002	LT LEF	

6501*	Paddle Roller Position Adjustment (D392)	
001	-	[-3 to 3 / **0** / 0.1 mm]

6502*	Pre-Bind Jog Adjustment 1 (D392)	
001	A4 LEF	[-2 to 2 / **0** / 0.1 mm]
002	LT LEF	

6503*	Pre-Bind Jog Adjustment 2 (D392)	
001	A4 LEF	[-2 to 2 / **0** / 0.1 mm]
002	LT LEF	

6504	Pre-Punch Jog Adjustment (D392)	
001	A4 LEF	[-4 to 4 / **0** / 0.1 mm]
002	LT LEF	

6505	Paddle Roller Position Adjustment (D392)	
001	-	[-3 to 3 / **0** / 0.1 mm]

6506	Pre-Bind Jog Adjustment 1 (D392)	
001	A4 LEF	[-2 to 2 / **0** / 0.1 mm]
002	LT LEF	

6507	Pre-Punch Jog Adjustment 2 (D392)	
001	A4 LEF	[-2 to 2 / **0** / 0.1 mm]
002	LT LEF	

6508	Ring Binder Input Check
	(☛page 822 "Input Check: 4")

6509	Ring Binder Output Check	
	(☛page 840 "Output Check")	

6524	Stack Thickness Volume Adjustment (D391)	
001	0mm Adjust	[0 to 1023 / **97** / 1]
002	25 mm Adjust	[0 to 1023 / **865** / 1]

6525	Glue Remain Thermistor: Wet Side (D391)	
001	Glue Vat: Wet Side Lower Limit	[0 to 255 / **132** / 1]
002	Glue Vat: Wet Side Upper Limit	[0 to 255 / **142** / 1]

6526	Input Check: Perfect Binder
	(☛ page 822 "Input Check: 4")

6600	Input Check: Stacker 1
	(☛page 822 "Input Check: 4")

6601	Output Check: Stacker 1
	(☛page 840 "Output Check")

6602*	Jog Fence Adjust: Stacker 1	High Capacity Stacker (D447)

001	A3 SEF	[-2 to +2 / **0** / 0.1 mm]
002	B4 SEF	
003	A4 SEF	
004	A4 LEF	
005	A5 SEF	
006	A5 LEF	
007	B5 SEF	
008	B5 LEF	
009	DLT SEF	[-2 to +2 / **0** / 0.1 mm]
010	LG SEF	
011	LT SEF	
012	LT LEF	
013	HLT SEF	
014	HLT LEF	
015	Other	

6603*	LE Stopper Adjust: Stacker 1	High Capacity Stacker (D447)
001	A3 SEF	[-2 to +2 / **0** / 0.1 mm]
002	B4 SEF	
003	A4 SEF	
004	A4 LEF	
005	A5 SEF	
006	A5 LEF	
007	B5 SEF	
008	B5 LEF	

009	DLT SEF	[-2 to +2 / **0** / 0.1 mm]
010	LG SEF	
011	LT SEF	
012	LT LEF	
013	HLT SEF	
014	HLT LEF	
015	Other	

6604*	Sub Jog Fence Adjust: Stacker 1	Hi Capacity Stacker (D447)
001	A3 SEF	[+2 to -2 / **0** / 0.1 mm]
002	B4 SEF	
009	DLT SEF	
010	LG SEF	
015	Other	

6606	Input Check: Stacker 2
	(☛page 822 "Input Check: 4")

6607	Output Check: Stacker 2
	(☛page 840 "Output Check")

6608*	Jog Fence Adjust: Stacker 2	High Capacity Stacker (D447)

001	A3 SEF	[-2 to +2 / **0** / 0.1 mm]
002	B4 SEF	
003	A4 SEF	
004	A4 LEF	
005	A5 SEF	
006	A5 LEF	
007	B5 SEF	
008	B5 LEF	
009	DLT SEF	[-2 to +2 / **0** / 0.1 mm]
010	LG SEF	
011	LT SEF	
012	LT LEF	
013	HLT SEF	
014	HLT LEF	
015	Other	

6609*	LE Stopper Adjust: Stacker 2	High Capacity Stacker (D447)
001	A3 SEF	[-2 to +2 / **0** / 0.1 mm]
002	B4 SEF	
003	A4 SEF	
004	A4 LEF	
005	A5 SEF	
006	A5 LEF	
007	B5 SEF	
008	B5 LEF	

009	DLT SEF	[-2 to +2 / **0** / 0.1 mm]
010	LG SEF	
011	LT SEF	
012	LT LEF	
013	HLT SEF	
014	HLT LEF	
015	Other	

6610*	Sub Jog Fence Adjust: Stacker 2	Hi Capacity Stacker (D447)
001	A3 SEF	[+2 to -2 / **0** / 0.1 mm]
002	B4 SEF	
009	DLT SEF	
010	LG SEF	
015	Other	

6612	Stacker 1 Fan Setting	High Capacity Stacker (D447)
	0: ON, 1: OFF	

6613	Stacker 2 Fan Setting	High Capacity Stacker (D447)
	0: ON, 1: OFF	

6650	Input Check: Trimmer (D455)
	(☛page 822 "Input Check: 4")

6651	Output Check: Trimmer (D455)
	(☛page 840 "Output Check")

6770*	Stack Full Setting

001	-	[0 to 3 / **0** / 1]

6800	Sheet Conversion (Stapling: Thick Paper) **DFU**
001	Selects the count type for stapling the thick paper. The machine calculates one sheet of thick paper as three sheets of plain paper by default. [1 to 3 / **3** / 1] 1: 1 sheet 2: 2 sheets 3: 3 sheets

6810	Ring Binding Thick Paper **DFU**
	Selects the count type for binding the thick paper. The machine calculates one sheet of thick paper as three sheets of plain paper by default. [1 to 3 / **3** /1] 1: 1 sheet 2: 2 sheets 3: 3 sheets

6830	Extra Staples **DFU**
	More than the standard number of corner staples can be loaded. This SP recognizes the maximum number of staples (This Setting + Standard Number). • If the number of the maximum for staples is increased, and the mechanical warranty of the unit can be guaranteed, then the setting can take effect without changing the controller software. • However, assurance that mechanical performance can be guaranteed is required before changing the setting to increase the staple load for more than the maximum in the feed/exit specifications. Raising this setting without quality assurance could damage the machine.
001	0 to 50 (Initial: 0) [0 to 50 / **0** /1]
002	0 to 50 (Initial: 0) [0 to 50 / **0** /1]

6890	Punch Function Enabled (Z-Fold)
001	Permission for punching thick (tab) paper is forbidden and it is up to the service technician to pass this on to the customer. [0 or 1/ **0** / -] **0:** Simultaneous use forbidden 1: Simultaneous use allowed

System SP7-xxx: 1

SP7-XXX (Data Log)

7001	Engine Drive Distance Counter
001	Total Drive Time:Drum K
	Displays the total drive time of the K drum. [0 to 99999999 / - / 1 min]

7401	[Total SC Counter]		
	Displays the number of SC codes detected.		
001	SC Counter	*CTL	[0 to 9999 / 0 / 1/step]

7403	[SC History]		
	Logs the SC codes detected. The 10 most recently detected SC Codes are not displayed on the screen, but can be seen on the SMC (logging) outputs.		
001	Latest	*CTL	-
002	Latest 1		
003	Latest 2		
004	Latest 3		
005	Latest 4		
006	Latest 5		
007	Latest 6		
008	Latest 7		
009	Latest 8		
010	Latest 9		

7404	[SC 991 History]		
	Logs the SC 991 code detected.		
001	Latest	*CTL	-
002	Latest 1		
003	Latest 2		
004	Latest 3		
005	Latest 4		
006	Latest 5		
007	Latest 6		
008	Latest 7		
009	Latest 8		
010	Latest 9		

7502	[Total Paper Jam Counter]		
	Displays the total number of jams detected.		
001	Total Jam	* CTL	[0 to 9999 / 0 / 1 sheet/step]

7503	[Total Original Jam Counter] **(D095 only)**		
	Displays the total number of original jams detected.		
001	Total Jam	* CTL	[0 to 9999 / 0 / 1 sheet/step]

7504	[Paper Jam Location]		
	Displays the number of jams according to the location where jams were detected.		
001	At power on	*CTL	
003	Paper feed sensor 1: Late	*CTL	
004	Paper feed sensor 2: Late	*CTL	

006	Paper feed sensor upper (A4 LCT): Late **(M077 only)**	*CTL	
007	Paper feed sensor middle (A4 LCT): Late **(M077 only)**	*CTL	
008	Paper feed sensor lower (A4 LCT): Late **(M077 only)**	*CTL	
009	Paper feed sensor (By-pass): Late	*CTL	
010	Paper feed sensor upper (A3 LCT1): Late	*CTL	
011	Paper feed sensor lower (A3 LCT1): Late	*CTL	
012	Paper feed sensor upper (A3 LCT2): Late	*CTL	
013	Paper feed sensor lower (A3 LCT2): Late	*CTL	
014	Vertical Transport Sensor 1: Late	*CTL	
015	Vertical Transport Sensor 2: Late	*CTL	
017	4th transport sensor (A4 LCT): Late **(M077 only)**	*CTL	
018	5th transport sensor (A4 LCT): Late **(M077 only)**	*CTL	
019	6th transport sensor (A4 LCT): Late **(M077 only)**	*CTL	
020	7th Transport Sensor: Late	*CTL	
021	3rd Transport Sensor: Late	*CTL	
022	4th Transport Sensor: Late	*CTL	
023	5th Transport Sensor: Late	*CTL	
024	6th Transport Sensor: Late	*CTL	
025	Relay sensor (A4 LCT): Late **(M077 only)**	*CTL	
026	Bypass: Vertical Transport Sn: Late	*CTL	
027	Vertical Transport Sn 3: Late	*CTL	
028	Vertical Transport Sn 4: Late	*CTL	

029	Vertical Transport Sn 5: Late	*CTL	
030	Vertical Transport Sn 6: Late	*CTL	
031	LCT exit sensor (A4 LCT): Late **(M077 only)**	*CTL	
033	Registration entrance sensor: Late	*CTL	
034	LCT entrance sensor: Late	*CTL	
035	Registration timing sensor: Late	*CTL	
036	PTR timing sensor: Late	*CTL	
037	PTB jam sensor: Late	*CTL	
038	Fusing exit sensor: Late	*CTL	
039	Exit junction timing sensor: Late	*CTL	
040	Paper exit sensor: Late	*CTL	
041	Switchback sensor: Late	*CTL	
042	Duplex transport sensor 1: Late	*CTL	
043	Duplex transport sensor 2: Late	*CTL	
044	Duplex transport sensor 3: Late	*CTL	
045	Duplex transport sensor 4: Late	*CTL	
053	Paper feed sensor 1: Stay on	*CTL	
054	Paper feed sensor 2: Stay on	*CTL	
056	Paper feed sensor upper (A4 LCT): Stay on **(M077 only)**	*CTL	
057	Paper feed sensor middle (A4 LCT): Stay on **(M077 only)**	*CTL	
058	Paper feed sensor lower (A4 LCT): Stay on **(M077 only)**	*CTL	
059	Paper feed sensor (By-pass): Stay on	*CTL	
060	Paper feed sensor upper (A3 LCT1): Stay on	*CTL	

061	Paper feed sensor lower (A3 LCT1): Stay on	*CTL	
062	Paper feed sensor upper (A3 LCT2): Stay on	*CTL	
063	Paper feed sensor lower (A3 LCT2): Stay on	*CTL	
064	Vertical Transport Sensor 1: Stay on		
065	Vertical Transport Sensor 2: Stay on		
067	4th transport sensor (A4 LCT): Stay on **(M077 only)**	*CTL	
068	5th transport sensor (A4 LCT): Stay on **(M077 only)**	*CTL	
069	6th transport sensor (A4 LCT): Stay on **(M077 only)**	*CTL	
070	Relay sensor (By-pass): Stay on	*CTL	
071	LCT Grip Sensor 1 (A3 LCT1): Stay on	*CTL	
072	LCT Grip Sensor 2 (A3 LCT1): Stay on	*CTL	
073	LCT Grip Sensor 1 (A3 LCT2): Stay on	*CTL	
074	LCT Grip Sensor 2 (A3 LCT2): Stay on	*CTL	
075	Relay sensor (A4 LCT): Stay on **(M077 only)**	*CTL	
076	LCT vertical transport sensor 3 (A3 LCT1): Stay on	*CTL	
077	LCT vertical transport sensor 1 (A3 LCT1): Stay on	*CTL	
078	LCT vertical transport sensor 2 (A3 LCT1): Stay on	*CTL	
079	LCT vertical transport sensor 1 (A3 LCT2): Stay on	*CTL	
080	LCT vertical transport sensor 2 (A3 LCT2): Stay on	*CTL	
081	LCT exit sensor (A4 LCT): Stay on **(M077 only)**	*CTL	
083	Registration entrance sensor: Stay on	*CTL	
084	LCT entrance sensor: Stay on	*CTL	
085	Registration timing sensor: Stay on	*CTL	

086	PTR timing sensor: Stay on	*CTL	
087	PTB jam sensor: Stay on	*CTL	
088	Fusing exit sensor: Stay on	*CTL	
089	Exit junction timing sensor: Stay on	*CTL	
090	Paper exit sensor: Stay on	*CTL	
091	Switchback sensor: Stay on	*CTL	
092	Duplex transport sensor 1: Stay on	*CTL	
093	Duplex transport sensor 2: Stay on	*CTL	
094	Duplex transport sensor 3: Stay on	*CTL	
095	Duplex transport sensor 4: Stay on	*CTL	
098	CIS: Skew Detection	*CTL	
099	Double-feed Sensor	*CTL	

7504	Paper Jam Loc	Paper Jam Locations – Finisher B830
	Displays the list of possible locations where a jam could have occurred. Press the appropriate key to display the jam count for that location. These jams are caused by the failure of a sensor to activate. Paper late error: Paper failed to arrive at prescribed time. Paper lag error: Paper failed to leave at prescribed time.	
	On Screen	What It Means
101	Entrance Sensor – Fin.	Paper late error
102	Entrance Sensor – Fin. (Stay On)	Paper lag error
103	Upper Tray Exit Sensor – Fin	Paper late error
104	Upper Tray Exit Sensor – Fin (Stay On)	Paper lag error
105	Shift Tray Exit Sensor – Fin	Paper late error
106	Shift Tray Exit Sensor – Fin (Stay On)	Paper lag error
107	Staple Tray Exit Sensor – Fin	Paper late error

108	Staple Tray Exit Sensor – Fin (Stay On)	Paper lag error
109	Staple Tray Paper Sensor – Fin	Paper late error
110	Staple Tray Paper Sensor – Fin (Stay On)	Paper lag error
111	Stack Feed-Out Belt HP Sensor	Malfunction
112	Transport Motors	
113	Shift Tray Lift Motor	
114	Jogger Motor	
115	Shift Motor	
116	Staple Motor	
117	Stack Feed-Out Belt Motor	
118	Punch Motor	
119	Z-Fold Jam – Fin	
120	Pre-Stack Transport Motor	
121	Abnormal Signal – Fin	
122	Upper Stopper Motor Lock	
123	Paper Jam Count by Location: FIN: GBC Punch Unit Jam **Note** • Every time the GBC Front Door is opened, even if the jam is not in GBC paper path, it will record JAM Cord 123, and you will see the Jam Cord 123 incremented by 1. • Closing the front door of GBC, Jam 123 is cleared and machine will operate normally.	

7504	Paper Jam Loc	Paper Jam Locations – Cover Interposer B835
	Displays the list of possible locations where a jam could have occurred. Press the appropriate key to display the jam count for that location. These jams are caused by the failure of a sensor to activate. Paper late error: Paper failed to arrive at prescribed time. Paper lag error: Paper failed to leave at prescribed time.	
	On Screen	What It Means
130	1st Paper Feed Sensor – Late	Paper late error
131	1st Paper Feed Sensor – Lag	Paper lag error
132	2nd Paper Feed Sensor – Late	Paper late error
133	2nd Paper Feed Sensor – Lag	Paper lag error
134	1st Transport Sensor – Late	Paper late error
135	1st Transport Sensor – Lag	Paper lag error
136	2nd Transport Sensor – Late	Paper late error
137	2nd Transport Sensor – Lag	Paper lag error
138	1st Vertical Transport Sensor - Late	Paper late error
139	1st Vertical Transport Sensor - Lag	Paper lag error
140	2nd Vertical Transport Sensor - Late	Paper late error
141	2nd Vertical Transport Sensor - Lag	Paper lag error
142	Vertical Exit Sensor – Late	Paper late error
143	Vertical Exit Sensor - Lag	Paper lag error
144	Entrance Sensor – Late	Paper late error
145	Entrance Sensor – Lag	Paper lag error
146	Exit Sensor – Late	Paper late error
147	Exit Sensor – Lag	Paper lag error

148	1st Lift Motor	Malfunction
149	2nd Lift Motor	
150	1st Pick-Up Motor	
151	2nd Pick-Up Motor	

7504	Paper Jam Loc	Paper Jam Locations – Finisher D434
	Displays the list of possible locations where a jam could have occurred. Press the appropriate key to display the jam count for that location. These jams are caused by the failure of a sensor to activate. Paper late error: Paper failed to arrive at prescribed time. Paper lag error: Paper failed to leave at prescribed time.	
	On Screen	What It Means
160	Entrance Sensor – Late	Paper late erro
161	Entrance Sensor – Lag	Paper lag error
162	Stapling Tray Paper Sensor – Late	Paper late erro
163	Stapling Tray Paper Sensor – Lag	Paper lag error
164	Stack Present Sensor – Late	Paper late erro
165	Stack Present Sensor – Lag	Paper lag error
166	Fold Unit Entrance Sensor – Late	Paper late erro
167	Fold Unit Entrance Sensor – Lag	Paper lag error
168	Fold Unit Exit Sensor – Late	Paper late erro
169	Fold Unit Exit Sensor – Lag	Paper lag error
170	Exit Sensor – Late	Paper late erro
171	Exit Sensor – Lag	Paper lag error

174	Jogger Fence	Malfunction
175	Stack Feed-Out Belt	
176	Booklet Stapler – Front	
177	Booklet Stapler – Rear	
178	Stack Junction Gate Motor	
179	Clamp Roller Retraction Motor	
180	Bottom Fence Lift Motor	
181	Fold Plate Motor	
182	Bind: Job data Err	Malfunction
183	Pre-Stacker Drive Train	
184	Booklet Path	
185	Booklet Stapling System	
186	Folding System	
187	Main Machine Setting Incorrect	

7504	Paper Jam Loc	Paper Jam Locations – Z-Fold Unit B660
	Displays the list of possible locations where a jam could have occurred. Press the appropriate key to display the jam count for that location. These jams are caused by the failure of a sensor to activate. Paper late error: Paper failed to arrive at prescribed time. Paper lag error: Paper failed to leave at prescribed time.	
200	Feed Sensor – Late	Paper late error
201	Feed Sensor – Lag	Paper lag error
202	Fold Timing Sensor – Late	Paper late error
203	Fold Timing Sensor – Lag	Paper lag error
204	Leading Edge Sensor – Late	Paper late error
205	Leading Edge Sensor – Lag	Paper lag error

206	Upper Stopper HP Sensor – Late	Paper late error
207	Upper Stopper HP Sensor – Lag	Paper lag error
208	Upper Exit Sensor 1 – Late	Paper late error
209	Upper Exit Sensor 1- Lag	Paper lag error
212	Lower Exit Sensor 2 – Late	Paper late error
213	Lower Exit Sensor 2 – Lag	Paper lag error
214	Feed Motor	Feed Motor
215	Lower Stopper Motor	Lower Stopper Motor
216	Upper Stopper Motor	Upper Stopper Motor

7504	Paper Jam Loc	Paper Jam Locations – Trimmer D455
	Displays the list of possible locations where a jam could have occurred. Press the appropriate key to display the jam count for that location. These jams are caused by the failure of a sensor to activate. Paper late error: Paper failed to arrive at prescribed time. Paper stay error: Paper failed to leave at prescribed time.	
220	Entrance Sensor: Late Error	
221	Entrance Sensor: Lag Error	
222	Skew Sensor: Late Error	
223	Skew Sensor: Lag Error	
224	Exit Sensor: Late Error	
225	Exit Sensor: Lag Error	
226	Trimming Blade Motor Lock	
227	Cut Position Motor	
228	Press Roller	
229	Press/Stopper Roller	
230	Tray Motor	

7504	Paper Jam Loc	Paper Jam Locations – Stacker D447
	Displays the list of possible locations where a jam could have occurred. Press the appropriate key to display the jam count for that location. These jams are caused by the failure of a sensor to activate. Paper late error: Paper failed to arrive at prescribed time. Paper stay error: Paper failed to leave at prescribed time.	
250	Stacker1: Entrance	
251	Stacker1: Ex-Tray: P	
252	Stacker1: Ex-Tray: P	
253	Stacker1: S-Tray: P	
254	Stacker1: S-Tray: P	
255	Stacker1: Bridge Pa	

7505	Original Jam Detection	
	Displays the list of possible locations where an original jam could have occurred. These jams are caused by the failure of a sensor to activate.	
001	At Power On	
003	Feed Jam	
004	Exit Jam	

7506	[Jam Count by Paper Size]
	Displays the number of jams according to the paper size.

005	A4 LEF	*CTL	[0 to 9999 / 0 / 1 sheet/step]
006	A5 LEF		
014	B5 LEF		
038	LT LEF		
044	HLT LEF		
132	A3 SEF		
133	A4 SEF		
134	A5 SEF		
141	B4 SEF		
142	B5 SEF		
160	DLT SEF		
164	LG SEF		
166	LT SEF		
172	HLT SEF		
255	Others		

7507	[Plotter Jam History]
	Displays the 10 most recently detected paper jams.

001	Latest	*CTL	-
002	Latest 1		
003	Latest 2		
004	Latest 3		
005	Latest 4		
006	Latest 5		
007	Latest 6		
008	Latest 7		
009	Latest 8		
010	Latest 9		

7508	[Original Jam History] **(D095 only)**		
	Displays the 10 most recently detected paper jams.		
001	Latest	*CTL	-
002	Latest 1		
003	Latest 2		
004	Latest 3		
005	Latest 4		
006	Latest 5		
007	Latest 6		
008	Latest 7		
009	Latest 8		
010	Latest 9		

System SP7-xxx: 2

7509	[Paper Jam Loc]		
	Displays the number of jams according to the location where jams were detected.		
001	Stacker1: Br-Path E	*CTL	Stacker 1 (D447)
002	Stacker1: Br-Path E	*CTL	
003	Stacker1: Off-set U	*CTL	
004	Stacker1: Side Jogg	*CTL	
005	Stacker1: L-Edge Jo	*CTL	
006	Stacker1: Stack Tra	*CTL	
007	Stacker1: Job Data	*CTL	
015	Stacker2: Entrance	*CTL	Stacker 2 (D447)
016	Stacker2: Ex-Tray: P	*CTL	
017	Stacker2: Ex-Tray: P	*CTL	
018	Stacker2: S-Tray: P	*CTL	
019	Stacker2: S-Tray: P	*CTL	
020	Stacker2: Bridge Pa	*CTL	
021	Stacker2: Br-Path E	*CTL	
022	Stacker2: Br-Path E	*CTL	
023	Stacker2: Off-set U	*CTL	
024	Stacker2: Side Jogg	*CTL	
025	Stacker2: L-Edge Jo	*CTL	
026	Stacker2: Stack Tra	*CTL	
027	Stacker2: Job Data	*CTL	

045	P-Binder:Job Data Error	*CTL	Perfect Binder (D391)
046	P-Binder:S-Through Exit Sn:Late	*CTL	
047	P-Binder:S-Through Exit Sn:Stay on	*CTL	
048	P-Binder:Cover Regist Sn:Late	*CTL	
049	P-Binder:Cover Regist Sn:Stay on	*CTL	
050	P-Binder:Cover H-Reg. S Sn:Late	*CTL	
051	P-Binder:Cover H-Reg. S Sn:Stay on	*CTL	
052	P-Binder:Cover H-Reg. L Sn:Late	*CTL	
053	P-Binder:Cover H-Reg. L Sn:Stay on	*CTL	
054	P-Binder:Entrance Sn:Late	*CTL	
055	P-Binder:Entrance Sn:Stay on	*CTL	
056	P-Binder:Sign. Path: Sn 1:Late	*CTL	
057	P-Binder:Sign. Path: Sn 1:Stay on	*CTL	
058	P-Binder:Sign. Path: Sn 2:Late	*CTL	
059	P-Binder:Sign. Path: Sn 2:Stay on	*CTL	
060	P-Binder:Timing Sn:Late	*CTL	Perfect Binder (D391)
061	P-Binder:Timing Sn:Stay on	*CTL	
062	P-Binder:Stck Tray Emp. Sn:Late	*CTL	
063	P-Binder:Stck Tray Emp. Sn:Stay on	*CTL	
064	P-Binder:SG Paper Sn:Late	*CTL	
065	P-Binder:Cover Path: Sn 1:Stay on	*CTL	
066	P-Binder:Cover Path: Sn 1:Late	*CTL	
067	P-Binder:Cover Path: Sn 2:Late	*CTL	
068	P-Binder:Cover Path: Sn 2:Stay on	*CTL	
069	P-Binder:Cover Reg. Sn:Late	*CTL	
070	P-Binder:Cover Reg. Sn:Stay on	*CTL	

071	P-B/Inserter:Com. Sn:Late	*CTL	Perfect Binder (D391)
072	P-B/Inserter:Com. Sn:Stay on	*CTL	
073	P-B/Inserter:U-Tray P-up Sn:Late	*CTL	
074	P-B/Inserter:U-Tray P-up Sn:Stay on	*CTL	
075	P-B/Inserter:L-Tray P-up Sn:Late	*CTL	
076	P-B/Inserter:L-Tray P-up Sn:Stay on	*CTL	
077	P-B/Inserter:Trans. Sn 1:Late	*CTL	
078	P-B/Inserter:Trans. Sn 1:Stay on	*CTL	
079	P-B/Inserter:Trans. Sn 2:Late	*CTL	
080	P-B/Inserter:Trans. Sn 2:Stay on	*CTL	
081	P-B/Relay:Transport Sn:Late	*CTL	
082	P-B/Relay:Transport Sn:Stay on	*CTL	
095	R-Binder: Entrance	*CTL	Ring Binder (D392)
096	R-Binder: Entrance	*CTL	
097	R-Binder: Transport	*CTL	
098	R-Binder: Transport	*CTL	
099	R-Binder: Exit Sn: L	*CTL	
100	R-Binder: Exit Sn: S	*CTL	
101	R-Binder: Pre-punch	*CTL	
102	R-Binder: After-pun	*CTL	
103	R-Binder: P TE Data	*CTL	
104	R-Binder: P LE Data	*CTL	
105	R-Binder: Ring Erro	*CTL	
106	R-Binder: Binder Un	*CTL	

107	R-Binder: Output Be	*CTL	Ring Binder (D392)
108	R-Binder: Output Be	*CTL	
109	R-Binder: Stacker J	*CTL	
110	R-Binder: Punch Mot	*CTL	
111	R-Binder: Shutter M	*CTL	
112	R-Binder: Line-up P	*CTL	
113	R-Binder: Paper Jog	*CTL	
114	R-Binder: Line-up P	*CTL	
115	R-Binder: Clamp Mot	*CTL	
116	R-Binder: 50/100 ad	*CTL	
117	R-Binder: Out-Belt	*CTL	
118	R-Binder: Job Data	*CTL	
125	Buffer Pass Unit: Relay Sensor 1: Late	*CTL	Buffer Pass Unit (M379)
126	Buffer Pass Unit: Relay Sensor 1: Stay on	*CTL	
127	Buffer Pass Unit: Relay Sensor 2: Late	*CTL	
128	Buffer Pass Unit: Relay Sensor 2: Stay on	*CTL	
129	Buffer Pass Unit: Relay Sensor 3: Late	*CTL	
130	Buffer Pass Unit: Relay Sensor 3: Stay on	*CTL	
131	Buffer Pass Unit: Relay Sensor 4: Late	*CTL	
132	Buffer Pass Unit: Relay Sensor 4: Stay on	*CTL	

133	Buffer Pass Unit: Relay Sensor 5: Late	*CTL	Buffer Pass Unit (M379)
134	Buffer Pass Unit: Relay Sensor 5: Stay on	*CTL	
135	Buffer Pass Unit: Relay Sensor 6: Late	*CTL	
136	Buffer Pass Unit: Relay Sensor 6: Stay on	*CTL	
137	Buffer Pass Unit: Relay Sensor 7: Late	*CTL	
138	Buffer Pass Unit: Relay Sensor 7: Stay on	*CTL	
139	Buffer Pass Unit: Relay Sensor 8: Late	*CTL	
140	Buffer Pass Unit: Relay Sensor 8: Stay on	*CTL	
141	Buffer Pass Unit: Job Data Error	*CTL	
145	A3 LCT1: Exit Sn:La	*CTL	LCT-MF or LCT (D532)
146	A3 LCT1: Entrance S	*CTL	
147	A3 LCT1: Right Ver.	*CTL	
148	A3 LCT1: H-Trans. E	*CTL	
148	A3 LCT1: H-Trans. E	*CTL	
150	A3 LCT1: V-Trans. E	*CTL	
151	A3 LCT1: Exit Sn: La	*CTL	LCT-MF or LCT (D532)
196	A3 LCT1: Entrance S	*CTL	
197	A3 LCT1: Right Ver.	*CTL	
198	A3 LCT1: H-Trans. E	*CTL	
199	A3 LCT1: H-Trans. E	*CTL	
200	A3 LCT1: V-Trans. E	*CTL	
201	A3 LCT2: Exit Sn:	*CTL	LCT (D532)

7617	PM Parts Counter
	Displays the each counter for PM parts alarm.
001	Normal (Paper Feed Counter)

002	Df (Original Feed Counter)

7618	PM Parts Counter Reset
	Clears the each counter for PM parts alarm.
001	Normal (Paper Feed Counter)
002	Df (Original Feed Counter)

7621	PM Counter
	Displays the total counter for each PM parts.
001	Y PCU Developer
002	M PCU Developer
003	C PCU Developer
004	Bk PCU Developer
005	Y PCU Drum
006	M PCU Drum
007	C PCU Drum
008	Bk PCU Drum
009	Used Toner Bottle
010	Dust Filter:K
011	Dust Filter:YCM
012	Ozone Filter
016	Charge Corona Unit:Y
022	Charge Corona Unit:M
028	Charge Corona Unit:C
034	Charge Corona Unit:Bk
040	Drum Cleaning Unit:Y
041	Drum Cleaning Brush Roller:Y

042	Drum Cleaning Blade:Y
043	Drum Lubricant Brush Roller:Y
044	Drum Lubricant Blade:Y
045	Drum Lubricant Bar:Y
046	Drum Cleaning Gear:Y
053	Drum Cleaning Unit:M
054	Drum Cleaning Brush Roller:M
055	Drum Cleaning Blade:M
056	Drum Lubricant Brush Roller:M
057	Drum Lubricant Blade:M
058	Drum Lubricant Bar:M
059	Drum Cleaning Gear:M
066	Drum Cleaning Unit:C
067	Drum Cleaning Brush Roller:C
068	Drum Cleaning Blade:C
069	Drum Lubricant Brush Roller:C
070	Drum Lubricant Blade:C
071	Drum Lubricant Bar:C
072	Drum Cleaning Gear:C
079	Drum Cleaning Unit:K
080	Drum Kleaning Brush Roller:K
081	Drum Kleaning Blade:K
082	Drum Lubricant Brush Roller:K
083	Drum Lubricant Blade:K
084	Drum Lubricant Bar:K
085	Drum Kleaning Gear:K

092	Image Transfer Roller:Y
093	Image Transfer Roller:M
094	Image Transfer Roller:C
095	Image Transfer Roller:K
096	ITB
097	ITB Bias Roller
098	ITB Cleaning Unit
099	ITB Cleaning Blade
100	ITB Cleaning Brush Roller
101	ITB Lubricant Brush Roller
102	ITB Lube Bar
105	PTR Unit
106	Paper Transfer Roller
107	PTR Cleaning Brush Roller
108	PTR Lubricant Brush Roller
109	PTR Cleaning Blade
110	PTR Lubricant Bar
111	PTR Discharge Plate
112	Brush Roller Gear
115	Fusing Unit
117	Hot Roller
118	Fusing Belt
119	Pressure Roller
125	Thermistor 1 2 3
129	Web Cleaning Unit
151	Pick-up Roller:Tray 1

152	Feed Roller:Tray 1
153	Separation Roller:Tray 1
154	Pick-up Roller:Tray 2
155	Feed Roller:Tray 2
156	Separation Roller:Tray 2
157	Pickup:A4LCT Upper **(M077 only)**
158	Feed:A4LCT Upper **(M077 only)**
159	Separate:A4LCT Upper **(M077 only)**
160	Pickup:A4LCT Middle **(M077 only)**
161	Feed:A4LCT Middle **(M077 only)**
162	Separate:A4LCT Middle **(M077 only)**
163	Pickup:A4LCT Lower **(M077 only)**
164	Feed:A4LCT Lower **(M077 only)**
165	Separate:A4LCT Lower **(M077 only)**
178	ADF Transport Belt **(D095 only)**
179	ADF Reverse Roller **(D095 only)**
180	ADF Feed Belt # **(D095 only)**
181	ADF Separation **(D095 only)**
182	By-pass:Pick-up Roller
183	By-pass:Feed Roller
184	By-pass:Separation Roller
185	Contact Glass (Exposure Glass) **(D095 only)**
186	Inserter Tray1: Feed belt : U-Tray
187	Inserter Tray1: Separation Roller : U-Tray
188	Inserter Tray1: Pick-up Roller : U-Tray
190	Inserter Tray2: Feed Belt : L-Tray

191	Inserter Tray2: Separation Roller : L-Tray
192	Inserter Tray2: Pick-up Roller : L-Tray
198	Pickup Roller:Perfect Binder:Lower-Tray
199	Separation Roller:Perfect Binder:Lower-Tray
200	Feed Roller:Perfect Binder:Lower-Tray
201	Switchback Rollers Torque Limiter : Cover Transport
202	Signature Thickness Sensor Volume : Perfect Binder
203	Electro Magnetic Clutch:Perfect Binder:Lower-Tray
204	Torque Diode : Trimming Signature Rotation Unit : Perfect Binder
205	Trimming Buffer Motor : Perfect Binder
206	Pickup Roller : Perfect Binder
207	Separation Roller : Perfect Binder
208	Feed Roller : Perfect Binder
209	Magnetic Clutch : Perfect Binder
210	Torque Limiter : Perfect Binder
211	Grip Motor Gear : Perfect Binder
212	Torque Limiter : Perfect Binder : Lower-Tray
213	Torque Limiter : Trimming Signature Rotation U
214	Right Spine Fold Unit Harness: Perfect Binder
215	Left Spine Fold Unit Harness: Perfect Binder
232	A3LCT Tray3 Paper Feed
233	A3LCT Tray3 Pickup
234	A3LCT Tray3 Feed
235	A3LCT Tray3 Separate
236	A3LCT Tray4 Paper Feed
237	A3LCT Tray4 Pickup

238	A3LCT Tray4 Feed
239	A3LCT Tray4 Separate
240	A3LCT Tray5 Paper Feed
241	A3LCT Tray5 Pickup
242	A3LCT Tray5 Feed
243	A3LCT Tray5 Separate
244	A3LCT Tray6 Paper Feed
245	A3LCT Tray6 Pickup
246	A3LCT Tray6 Feed
247	A3LCT Tray6 Separate

7622	Reset (PM Counter)
	Resets the total counter for each PM parts.

7623	Standard Value (of PM Parts Life)
	Displays the standard value of PM parts life for each PM parts.

7624	Operational Value
	Uses or does not use the PM counters as the reference for displaying the alert on the SMC. [0 or 1 / **1** / -] 0: Does not use, 1: Uses

7625	Pg Count History:Latest 1	Displays the PM counter history.
7626	Pg Count History:Latest 2	Displays the PM counter history.

7628	Clear PM Counter
001	Clear Exceeded Counts
	Clears the PM counters which exceed the PM life for each PM part.

002	Reset All Counts
	Resets the all PM counters and standard values of the PM parts life.

7801	ROM No./Firmware Version Displays the serial number and the ROM version for each unit or peripheral.
002	Engine
005	ADF **(D095 only)**
007	FNS1 (3000-sheet Finisher: B830)
008	FNS2 (Booklet Finisher: D434)
010	LCT1 (A4 LCT B832 or 1st A3 LCT: D355)
020	Cover Interposer (B835)
025	Folding Unit (Z-Folding Unit ZF4000: B660)
028	LCT 2: Board Serial No. (2nd A3 LCT: D532)
029	Ring Binder: Board1 Serial No. (D392)
030	Ring Binder:Board2 Serial No (D392)
031	Perfect Binder: Board1 Serial No. (D391) for future use
032	Perfect Binder: Board2 Serial No. (D391) for future use
033	Perfect Binder: Board3 Serial No. (D391) for future use
034	Perfect Binder: Board4 Serial No. (D391) for future use
035	Perfect Binder: Board5 Serial No. (D391) for future use
036	Stacker 1: Board Serial No. (D447)
037	Stacker 2: Board Serial No. (D447)
038	Engine2
039	Buffer Pass Unit (M379)
102	Engine
107	FNS1

108	FNS2
110	LCT1
120	Cover Interposer
125	Folding Unit
128	LCT 2:Version No.
129	Ring Binder:Board1 Version No.
130	Ring Binder:Board2 Version No.
131	Perfect Binder:Board1 Version No. for future use
132	Perfect Binder:Board2 Version No. for future use
133	Perfect Binder:Board3 Version No. for future use
134	Perfect Binder:Board4 Version No. for future use
135	Perfect Binder:Board5 Version No. for future use
136	Stacker 1:Version No.
137	Stacker 2:Version No.
138	Engine2
139	Buffer Pass Unit (M379)
255	Rom Version

7803	PM Counter Display		
001	-	CTL*	Displays the PM count since the last PM.

7804	PM Counter Reset		
001	-	CTL*	Clears the PM count.

7807	[SC/Jam Counter Reset]		
	Clears the counters related to SC codes and paper jams.		
001	SC/Jam Clear	-	-

7826	MF Error Counter		
001	Error Staple	-	-
002	Error Total		

7827	MF Error Counter Clear
001	Execute

7832	[Self-Diagnose Result Display]		
	Displays the result of the diagnostics.		
001	Diag. Result	*CTL	-

7835	ACC Counter **(D095 only)**		
001	Copy ACC	*CTL	Displays the ACC execution times for each mode.

7836	Total Memory Size
	Displays the memory capacity of the controller system.

7855	Coverage Range		
001	Coverage Range 1	-	[1 to 200 / **5** / 1%]
002	Coverage Range 2	-	[1 to 200 / **20** / 1%]

7860	Fusing: Paper Pass Time
	Displays the paper passing time history from the PTB sensor to the fusing exit sensor.
001	Latest 1
002	Latest 2
003	Latest 3
004	Latest 4
005	Latest 5

006	Latest 6
007	Latest 7
008	Latest 8
009	Latest 9
010	Latest 10
011	Latest 11
012	Latest 12
013	Latest 13
014	Latest 14
015	Latest 15
016	Latest 16

7901	[Assert Info] **DFU**		
	Records the location where a problem is detected in the program. The data stored in this SP is used for problem analysis.		
001	File Name	*CTL	-
002	Number of Lines		
003	Location		

7931*	Toner Bottle Bk
7932*	Toner Bottle M
7933*	Toner Bottle C
7934*	Toner Bottle Y
	Displays the toner bottle information for each color.
001	Model ID (API code)
002	Cartridge Ver (Version)
003	Brand ID

004	Area ID
005	Production ID (Toner amount information)
006	Color ID
007	Maintenance ID [20H: Excluding toner, 21H: Including toner, 99H: Sample]
008	New
009	Recycle Count Displays the recycled times.
010	Product Date
011	Serial No
012	Toner Remaining [0 to 100 / **100** / 1%]
013	EDP Code
014	Toner End [E: Toner end detected, N: Toner near end detected]
015	Toner Refill [RF: Toner refill detected, IS: IS product detected]
016	Total Count Start The total counter (BW or Mono Color) of the mainframe is stored when a toner bottle has been installed in the mainframe.
017	Total Count Start The total counter (Color) of the mainframe is stored when a toner bottle has been installed in the mainframe.
018	Total Count End The total counter (BW or Mono Color) of the mainframe is stored when the toner end for a toner bottle has been detected.
019	Total Count End The total counter (Color) of the mainframe is stored when the toner end for a toner bottle has been detected.

020	Set Date The date of a toner installation is stored.
021	End Date The date of toner end is stored.

7935*	Toner Bottle Log 1 to 5: Bk
7936*	Toner Bottle 1 to 5: M
7937*	Toner Bottle 1 to 5: C
7938*	Toner Bottle 1 to 5: Y
	Displays the toner bottle information for each color.
001	Serial No (Log 1)
002	Set Date (Log 1)
003	Total Count Start (Log 1)
004	Toner Refill (Log 1)
011	Serial No (Log 2)
012	Set Date (Log 2)
013	Total Count Start (Log 2)
014	Toner Refill (Log 2)
021	Serial No (Log 3)
022	Set Date (Log 3)
023	Total Count Start (Log 3)
024	Toner Refill (Log 3)
031	Serial No (Log 4)
032	Set Date (Log 4)
033	Total Count Start (Log 4)
034	Toner Refill (Log 4)

041	Serial No (Log 5)
042	Set Date (Log 5)
043	Total Count Start (Log 5)
044	Toner Refill (Log 5)

System SP7-xxx: 3

7940*	Drive Distance:End Std Value
	Displays the standard value (motor rotation count) of PM end for each PM part.
001	Y PCU Developer [0 to 99999999 / **368602** / 1 m]
002	M PCU Developer [0 to 99999999 / **368602** / 1 m]
003	C PCU Developer [0 to 99999999 / **368602** / 1 m]
004	Bk PCU Developer [0 to 99999999 / **349125** / 1 m]
005	Y PCU Drum [0 to 99999999 / **993571** / 1 m]
006	M PCU Drum [0 to 99999999 / **993571** / 1 m]
007	C PCU Drum [0 to 99999999 / **993571** / 1 m]
008	Bk PCU Drum [0 to 99999999 / **595582** / 1 m]
009	Used Toner Bottle [0 to 99999999 / **99999999** / 1 m]
010	Dust Filter:K [0 to 99999999 / **188528** / 1 m]
011	Dust Filter:YCM [0 to 99999999 / **188528** / 1 m]
012	Ozone Filter [0 to 99999999 / **565582** / 1 m]
016	Charge Corona Unit:Y [0 to 99999999 / **194937** / 1 m]
022	Charge Corona Unit:M [0 to 99999999 / **194937** / 1 m]
028	Charge Corona Unit:C [0 to 99999999 / **194937** / 1 m]
034	Charge Corona Unit:K [0 to 99999999 / **184764** / 1 m]
040	Drum Cleaning Unit:Y [0 to 99999999 / **198342** / 1 m]
041	Drum Cleaning Brush Roller:Y [0 to 99999999 / **198342** / 1 m]
042	Drum Cleaning Blade:Y [0 to 99999999 / **198342** / 1 m]
043	Drum Lubricant Brush Roller:Y [0 to 99999999 / **198342** / 1 m]
044	Drum Lubricant Blade:Y [0 to 99999999 / **198342** / 1 m]
045	Drum Lubricant Bar:Y [0 to 99999999 / **198342** / 1 m]

046	Drum Cleaning Gear:Y [0 to 99999999 / **198342** / 1 m]
053	Drum Cleaning Unit:M [0 to 99999999 / **198342** / 1 m]
054	Drum Cleaning Brush Roller:M [0 to 99999999 / **198342** / 1 m]
055	Drum Cleaning Blade:M [0 to 99999999 / **198342** / 1 m]
056	Drum Lubricant Brush Roller:M [0 to 99999999 / **198342** / 1 m]
057	Drum Lubricant Blade:M [0 to 99999999 / **198342** / 1 m]
058	Drum Lubricant Bar:M [0 to 99999999 / **198342** / 1 m]
059	Drum Cleaning Gear:M [0 to 99999999 / **198342** / 1 m]
066	Drum Cleaning Unit:C [0 to 99999999 / **198342** / 1 m]
067	Drum Cleaning Brush Roller:C [0 to 99999999 / **198342** / 1 m]
068	Drum Cleaning Blade:C [0 to 99999999 / **198342** / 1 m]
069	Drum Lubricant Brush Roller:C [0 to 99999999 / **198342** / 1 m]
070	Drum Lubricant Blade:C [0 to 99999999 / **198342** / 1 m]
071	Drum Lubricant Bar:C [0 to 99999999 / **198342** / 1 m]
072	Drum Cleaning Gear:C [0 to 99999999 / **198342** / 1 m]
079	Drum Cleaning Unit:K [0 to 99999999 / **188163** / 1 m]
080	Drum Kleaning Brush Roller:K [0 to 99999999 / **188163** / 1 m]
081	Drum Kleaning Blade:K [0 to 99999999 / **188163** / 1 m]
082	Drum Lubricant Brush Roller:K [0 to 99999999 / **188163** / 1 m]
083	Drum Lubricant Blade:K [0 to 99999999 / **188163** / 1 m]
084	Drum Lubricant Bar:K [0 to 99999999 / **188163** / 1 m]
085	Drum Kleaning Gear:K [0 to 99999999 / **188163** / 1 m]
092	Image Transfer Roller:Y [0 to 99999999 / **370704** / 1 m]
093	Image Transfer Roller:M [0 to 99999999 / **370704** / 1 m]
094	Image Transfer Roller:C [0 to 99999999 / **370704** / 1 m]
095	Image Transfer Roller:K [0 to 99999999 / **370704** / 1 m]

096	ITB [0 to 99999999 / **722582** / 1 m]
097	ITB Bias Roller [0 to 99999999 / **361291** / 1 m]
098	ITB Cleaning Unit [0 to 99999999 / **180646** / 1 m]
099	ITB Cleaning Blade [0 to 99999999 / **180646** / 1 m]
100	ITB Cleaning Brush Roller [0 to 99999999 / **180646** / 1 m]
101	ITB Lubricant Brush Roller [0 to 99999999 / **180646** / 1 m]
102	ITB Lube Bar [0 to 99999999 / **180646** / 1 m]
105	PTR Unit [0 to 99999999 / **181089** / 1 m]
106	Paper Transfer Roller [0 to 99999999 / **181089** / 1 m]
107	PTR Cleaning Brush Roller [0 to 99999999 / **181089** / 1 m]
108	PTR Lubricant Brush Roller [0 to 99999999 / **181089** / 1 m]
109	PTR Cleaning Blade [0 to 99999999 / **181089** / 1 m]
110	PTR Lubricant Bar [0 to 99999999 / **181089** / 1 m]
111	PTR Discharge Plate [0 to 99999999 / **181089** / 1 m]
112	Brush Roller Gear [0 to 99999999 / **99999999** / 1 m]
115	Fusing Unit [0 to 99999999 / **212667** / 1 m]
117	Hot Roller [0 to 99999999 / **425334** / 1 m]
118	Fusing Belt [0 to 99999999 / **425334** / 1 m]
119	Pressure Roller [0 to 99999999 / **425334** / 1 m]
125	Thermistor 1 2 3 [0 to 99999999 / **850668** / 1 m]
129	Web Cleaning Unit [0 to 99999999 / **99999999** / 1 m]

7941*	Drive Distance:N-End Std Value
	Displays the standard value (motor rotation count) of PM near-end for each PM part.
001	Y PCU Developer [0 to 99999999 / **331742** / 1 m]
002	M PCU Developer [0 to 99999999 / **331742** / 1 m]

003	C PCU Developer [0 to 99999999 / **331742** / 1 m]
004	Bk PCU Developer [0 to 99999999 / **324146** / 1 m]
005	Y PCU Drum [0 to 99999999 / **894214** / 1 m]
006	M PCU Drum [0 to 99999999 / **894214** / 1 m]
007	C PCU Drum [0 to 99999999 / **894214** / 1 m]
008	Bk PCU Drum [0 to 99999999 / **509024** / 1 m]
009	Used Toner Bottle [0 to 99999999 / **99999999** / 1 m]
010	Dust Filter: K [0 to 99999999 / **174564** / 1 m]
011	Used Toner Bottle [0 to 99999999 / **174564** / 1 m]
016	Charge Corona Unit:Y [0 to 99999999 / **175444** / 1 m]
022	Charge Corona Unit:M [0 to 99999999 / **175444** / 1 m]
028	Charge Corona Unit:C [0 to 99999999 / **175444** / 1 m]
034	Charge Corona Unit:K [0 to 99999999 / **166288** / 1 m]
040	Drum Cleaning Unit:Y [0 to 99999999 / **178508** / 1 m]
053	Drum Cleaning Unit:M [0 to 99999999 / **178508** / 1 m]
066	Drum Cleaning Unit:C [0 to 99999999 / **178508** / 1 m]
079	Drum Cleaning Unit:K [0 to 99999999 / **169347** / 1 m]
098	ITB Cleaning Unit [0 to 99999999 / **162582** / 1 m]
105	PTR Unit [0 to 99999999 / **162981** / 1 m]
115	Fusing Unit [0 to 99999999 / **189238** / 1 m]

7942*	Drive Distance % Counter
	Displays the drive distance rate (motor rotation count) of PM parts life for each PM part.
	[0 to 255 / **-** / 1%]

7943	Drive Distance PM Mode

001	Selects the PM counter mode. [0 or 1 / **1** / 1] 0: Drive distance counter, 1: Page counter

7944*	Drive Distance Counter
	Displays the drive distance counter for each PM part. [0 to 99999999 / **–** / 1 m]

7945*	Pg Counter
	Displays the page counter for each PM part. [0 to 99999999 / **–** / 1 page]

7946*	Pick Count
	Displays the page counter for each PM part. [0 to 99999999 / **–** / 1 page]

7951*	Page Counter:End Std Value
	Displays the standard value (page count) of PM end for each PM part.
001	Y PCU Developer [0 to 99999999 / **1,200,000** / 1 page]
002	M PCU Developer [0 to 99999999 / **1,200,000**/ 1 page]
003	C PCU Developer [0 to 99999999 / **1,200,000** / 1 page]
004	Bk PCU Developer [0 to 99999999 /**1,200,000** / 1 page]
005	Y PCU Drum [0 to 99999999 / **2,400,000** / 1 page]
006	M PCU Drum [0 to 99999999 / **2,400,000** / 1 page]

007	C PCU Drum [0 to 99999999 / **2,400,000** / 1 page]
008	Bk PCU Drum [0 to 99999999 / **2,400,000** / 1 page]
009	Used Toner Bottle [0 to 99999999 / **230,000** / 1 page]
010	Dust Filter:K [0 to 99999999 / **400000** / 1 page]
011	Dust Filter:YCM [0 to 99999999 / **400000** / 1 page]
012	Ozone Filter [0 to 99999999 / **1200000** / 1 page]
016	Charge Corona Unit:Y [0 to 99999999 / **400000** / 1 page]
022	Charge Corona Unit:M [0 to 99999999 / **400000** / 1 page]
028	Charge Corona Unit:C [0 to 99999999 / **400000** / 1 page]
034	Charge Corona Unit:Bk [0 to 99999999 / **400000** / 1 page]
040	Drum Cleaning Unit:Y [0 to 99999999 / **400000** / 1 page]
041	Drum Cleaning Brush Roller:Y [0 to 99999999 / **400000** / 1 page]
042	Drum Cleaning Blade:Y [0 to 99999999 / **400000** / 1 page]
043	Drum Lubricant Brush Roller:Y [0 to 99999999 / **400000** / 1 page]
044	Drum Lubricant Blade:Y [0 to 99999999 / **400000** / 1 page]

045	Drum Lubricant Bar:Y [0 to 99999999 / **400000** / 1 page]
046	Drum Cleaning Gear:Y [0 to 99999999 / **400000** / 1 page]
053	Drum Cleaning Unit:M [0 to 99999999 / **400000** / 1 page]
054	Drum Cleaning Brush Roller:M [0 to 99999999 / **400000** / 1 page]
055	Drum Cleaning Blade:M [0 to 99999999 / **400000** / 1 page]
056	Drum Lubricant Brush Roller:M [0 to 99999999 / **400000** / 1 page]
057	Drum Lubricant Blade:M [0 to 99999999 / **400000** / 1 page]
058	Drum Lubricant Bar:M [0 to 99999999 / **400000** / 1 page]
059	Drum Cleaning Gear:M [0 to 99999999 / **400000** / 1 page]
066	Drum Cleaning Unit:C [0 to 99999999 / **400000** / 1 page]
067	Drum Cleaning Brush Roller:C [0 to 99999999 / **400000** / 1 page]
068	Drum Cleaning Blade:C [0 to 99999999 / **400000** / 1 page]
069	Drum Lubricant Brush Roller:C [0 to 99999999 / **400000** / 1 page]
070	Drum Lubricant Blade:C [0 to 99999999 / **400000** / 1 page]

071	Drum Lubricant Bar:C [0 to 99999999 / **400000** / 1 page]
072	Drum Cleaning Gear:C [0 to 99999999 / **400000** / 1 page]
079	Drum Cleaning Unit:K [0 to 99999999 / **400000** / 1 page]
080	Drum Kleaning Brush Roller:K [0 to 99999999 / **400000** / 1 page]
081	Drum Kleaning Blade:K [0 to 99999999 / **400000** / 1 page]
082	Drum Lubricant Brush Roller:K [0 to 99999999 / **400000** / 1 page]
083	Drum Lubricant Blade:K [0 to 99999999 / **400000** / 1 page]
084	Drum Lubricant Bar:K [0 to 99999999 / **400000** / 1 page]
085	Drum Kleaning Gear:K [0 to 99999999 / **400000** / 1 page]
092	Image Transfer Roller:Y [0 to 99999999 / **800000** / 1 page]
093	Image Transfer Roller:M [0 to 99999999 / **800000** / 1 page]
094	Image Transfer Roller:C [0 to 99999999 / **800000** / 1 page]
095	Image Transfer Roller:K [0 to 99999999 / **800000** / 1 page]
096	ITB [0 to 99999999 / **1600000** / 1 page]

097	ITB Bias Roller [0 to 99999999 / **800000** / 1 page]
098	ITB Cleaning Unit [0 to 99999999 / **400000** / 1 page]
099	ITB Cleaning Blade [0 to 99999999 / **400000** / 1 page]
100	ITB Cleaning Brush Roller [0 to 99999999 / **400000** / 1 page]
101	ITB Lubricant Brush Roller [0 to 99999999 / **400000** / 1 page]
102	ITB Lube Bar [0 to 99999999 / **400000** / 1 page]
105	PTR Unit [0 to 99999999 / **400000** / 1 page]
106	Paper Transfer Roller [0 to 99999999 / **400000** / 1 page]
107	PTR Cleaning Brush Roller [0 to 99999999 / **400000** / 1 page]
108	PTR Lubricant Brush Roller [0 to 99999999 / **400000** / 1 page]
109	PTR Cleaning Blade [0 to 99999999 / **400000** / 1 page]
110	PTR Lubricant Bar [0 to 99999999 / **400000** / 1 page]
111	PTR Discharge Plate [0 to 99999999 / **400000** / 1 page]
112	Brush Roller Gear [0 to 99999999 / **99999999**/ 1 page]
115	Fusing Unit [0 to 99999999 / **400000** / 1 page]

117	Hot Roller [0 to 99999999 / **800000** / 1 page]
118	Fusing Belt [0 to 99999999 / **400000** / 1 page]
119	Pressure Roller [0 to 99999999 / **400000** / 1 page]
125	Heating Roller Thermistor [0 to 99999999 / **1600000** / 1 page]
129	Web Cleaning Unit [0 to 99999999 / **400000** / 1 page]

7952*	Pick Counter:End Std Value
	Displays the standard value (pick-up count) of PM end for each PM part.
151	Pick-up Roller:Tray 1 [0 to 99999999 / **1000000** / 1 sheet]
152	Feed Roller:Tray 1 [0 to 99999999 / **1000000** / 1 sheet]
153	Separation Roller:Tray 1 [0 to 99999999 / **1000000** / 1 sheet]
154	Pick-up Roller:Tray 2 [0 to 99999999 / **1000000** / 1 sheet]
155	Feed Roller:Tray 2 [0 to 99999999 / **1000000** / 1 sheet]
156	Separation Roller:Tray 2 [0 to 99999999 / **1000000** / 1 sheet]
157	Pickup:A4LCT Upper [0 to 99999999 / **1000000** / 1 sheet] **(M077 only)**
158	Feed:A4LCT Upper [0 to 99999999 / **1000000** / 1 sheet] **(M077 only)**
159	Separate:A4LCT Upper [0 to 99999999 / **1000000** / 1 sheet] **(M077 only)**
160	Pickup:A4LCT Middle [0 to 99999999 / **1000000** / 1 sheet] **(M077 only)**

161	Feed:A4LCT Middle [0 to 99999999 / **1000000** / 1 sheet] **(M077 only)**
162	Separate:A4LCT Middle [0 to 99999999 / **1000000** / 1 sheet] **(M077 only)**
163	Pickup:A4LCT Lower [0 to 99999999 / **1000000** / 1 sheet] **(M077 only)**
164	Feed:A4LCT Lower [0 to 99999999 / **1000000** / 1 sheet] **(M077 only)**
165	Separate:A4LCT Lower [0 to 99999999 / **1000000** / 1 sheet] **(M077 only)**
178	ADF Transport Belt [0 to 99999999 / **140000** / 1 sheet]
179	ADF Reverse Roller # [0 to 99999999 / **120000** / 1 sheet]
180	ADF Feed Belt # [0 to 99999999 / **120000** / 1 sheet]
181	ADF Pickup Roller # [0 to 99999999 / **120000** / 1 sheet]
182	By-pass:Pick-up Roller [0 to 99999999 / **1000000** / 1 sheet]
183	By-pass:Feed Roller [0 to 99999999 / **1000000** / 1 sheet]
184	By-pass:Separation Roller [0 to 99999999 / **1000000** / 1 sheet]
185	Contact Glass [0 to 99999999 / **1000000** / 1 sheet] **(D095 only)**
186	Feed Belt:U-Tray [0 to 99999999 / **600000** / 1 sheet]
187	Separation Roller:U-Tray [0 to 99999999 / **600000** / 1 sheet]
188	Pick-up Roller:U-Tray [0 to 99999999 / **600000** / 1 sheet]
190	Feed Belt:L-Tray [0 to 99999999 / **600000** / 1 sheet]
191	Separation Roller:L-Tray [0 to 99999999 / **600000** / 1 sheet]
192	Pick-up Roller:L-Tray [0 to 99999999 / **600000** / 1 sheet]
198	Pickup Roller:Perfect Binder:Lower-Tray [0 to 99999999 / **100000** / 1 sheet]

199	Separation Roller:Perfect Binder:Lower-Tray [0 to 99999999 / **100000** / 1 sheet]
200	Feed Roller:Perfect Binder:Lower-Tray [0 to 99999999 / **100000** / 1 sheet]
201	Switchback Rollers Torque Limiter : Cover Transport [0 to 99999999 / **1000000** / 1 sheet]
202	Signature Thickness Sensor Volume : Perfect Binder [0 to 99999999 / **50000** / 1 sheet]
203	Electro Magnetic Clutch:Perfect Binder:Lower-Tray [0 to 99999999 / **1000000** / 1 sheet]
204	Torque Diode : Trimming Signature Rotation Unit : Perfect Binder [0 to 99999999 / **50000** / 1 sheet]
205	Trimming Buffer Motor : Perfect Binder [0 to 99999999 / **50000** / 1 sheet]
206	Pickup Roller : Perfect Binder [0 to 99999999 / **100000** / 1 sheet]
207	Separation Roller : Perfect Binder [0 to 99999999 / **100000** / 1 sheet]
208	Feed Roller : Perfect Binder [0 to 99999999 / **100000** / 1 sheet]
209	Magnetic Clutch : Perfect Binder [0 to 99999999 / **1000000** / 1 sheet]
210	Torque Limiter : Perfect Binder [0 to 99999999 / **1000000** / 1 sheet]
211	Grip Motor Gear : Perfect Binder [0 to 99999999 / **50000** / 1 sheet]
212	Torque Limiter : Perfect Binder : Lower-Tray [0 to 99999999 / **1000000** / 1 sheet]
213	Torque Limiter : Trimming Signature Rotation U [0 to 99999999 / **50000** / 1 sheet]
214	Right Spine Fold Unit Harness: Perfect Binder [0 to 99999999 / **50000** / 1 sheet]
215	Left Spine Fold Unit Harness: Perfect Binder [0 to 99999999 / **50000** / 1 sheet]

232	A3LCT Tray3 Paper Feed [0 to 99999999 / **300000** / 1 sheet]
233	A3LCT Tray3 Pickup [0 to 99999999 / **300000** / 1 sheet]
234	A3LCT Tray3 Feed [0 to 99999999 / **300000** / 1 sheet]
235	A3LCT Tray3 Separate [0 to 99999999 / **300000** / 1 sheet]
236	A3LCT Tray4 Paper Feed [0 to 99999999 / **300000** / 1 sheet]
237	A3LCT Tray4 Pickup [0 to 99999999 / **300000** / 1 sheet]
238	A3LCT Tray4 Feed [0 to 99999999 / **300000** / 1 sheet]
239	A3LCT Tray4 Separate [0 to 99999999 / **300000** / 1 sheet]
240	A3LCT Tray5 Paper Feed [0 to 99999999 / **300000** / 1 sheet]
241	A3LCT Tray5 Pickup [0 to 99999999 / **300000** / 1 sheet]
242	A3LCT Tray5 Feed [0 to 99999999 / **300000** / 1 sheet]
243	A3LCT Tray5 Separate [0 to 99999999 / **300000** / 1 sheet]
244	A3LCT Tray6 Paper Feed [0 to 99999999 / **300000** / 1 sheet]
245	A3LCT Tray6 Pickup [0 to 99999999 / **300000** / 1 sheet]

246	A3LCT Tray6 Feed [0 to 99999999 / **300000** / 1 sheet]
247	A3LCT Tray6 Separate [0 to 99999999 / **300000** / 1 sheet]

7953*	Page Counter:N-End Std Value
	Displays the standard value (page count) of PM near-end for each PM part.
001	Y PCU Developer [0 to 99999999 / **1,080,000** / 1 page]
002	M PCU Developer [0 to 99999999 / **1,080,000** / 1 page]
003	C PCU Developer [0 to 99999999 / **1,080,000** / 1 page]
004	Bk PCU Developer [0 to 99999999 / **1,080,000** / 1 page]
005	Y PCU Drum [0 to 99999999 / **2,304,000** / 1 page]
006	M PCU Drum [0 to 99999999 / **2,304,000** / 1 page]
007	C PCU Drum [0 to 99999999 / **2,304,000** / 1 page]
008	Bk PCU Drum [0 to 99999999 / **2,304,000** / 1 page]
009	Used Toner Bottle [0 to 99999999 / **180000** / 1 page]
016	Charge Corona Unit:Y [0 to 99999999 / **360000** / 1 page]
022	Charge Corona Unit:M [0 to 99999999 / **360000** / 1 page]

028	Charge Corona Unit:C [0 to 99999999 / **360000** / 1 page]
034	Charge Corona Unit:K [0 to 99999999 / **360000** / 1 page]
040	Drum Cleaning Unit:Y [0 to 99999999 / **360,000** / 1 page]
053	Drum Cleaning Unit:M [0 to 99999999 / **360,000** / 1 page]
066	Drum Cleaning Unit:C [0 to 99999999 / **360,000** / 1 page]
079	Drum Cleaning Unit:K [0 to 99999999 / **360,000** / 1 page]
098	ITB Cleaning Unit [0 to 99999999 / **360,000** / 1 page]
105	PTR Unit [0 to 99999999 / **360,000** / 1 page]
115	Fusing Unit [0 to 99999999 / **360,000** / 1 page]

7954*	Consumption Rate Counter
	Displays the consumption rate counter (page count) of PM parts life for each PM part.
	[0 to 255 / **-** / 1%]

7955*	Pick Counter: N-End Std Value
220	A3LCT Tray3 Paper Feed [0 to 99999999 / **270000** / 1 page]
236	
240	
244	

232	A3LCT Tray3 Paper Feed [0 to 99999999 / **270000** / 1 page]
236	
240	
244	

7956*	TCRU Mode
	Selects whether the TCRU (trained customer replaceable unit) mode is used.
	[0 or 1 / **0** / 1] 0: No Operation, 1: Operation

7957*	TCRU Target
	Fusing Unit
	Selects whether the fusing unit is set as a TCRU (trained customer replaceable unit).
	[0 or 1 / **0** / 1] 0: Target, 1: Not Target

7963*	Operation Env. Log:PCU:Bk
	Displays the drive distance of the drum motor: K when the machine is operated in the following conditions.
001	Temp<=5: 0<=Hum<30
	This condition is "Temperature < 5/ 0% < Humidity < 30%". [0 to 99999999 / – / 1 m]
002	Temp<=5: 30<=Hum<55
	This condition is "Temperature < 5/ 30% < Humidity < 55%". [0 to 99999999 / – / 1 m]
003	Temp<=5: 55<=Hum<80
	This condition is "Temperature < 5/ 55% < Humidity < 80%". [0 to 99999999 / – / 1 m]

004	Temp<=5: 80<=Hum<100
	This condition is "Temperature < 5/ 80% < Humidity < 100%". [0 to 99999999 / – / 1 m]
005	5<Temp<=15: 0<=Hum<30
	This condition is "5 < Temperature < 15/ 0% < Humidity < 30%". [0 to 99999999 / – / 1 m]
006	5<Temp<=15: 30<=Hum<55
	This condition is "5 < Temperature < 15/ 30% < Humidity < 55%". [0 to 99999999 / – / 1 m]
007	5<Temp<=15: 55<=Hum<80
	This condition is "5 < Temperature < 15/ 55% < Humidity < 80%". [0 to 99999999 / – / 1 m]
008	5<Temp<=15: 80<=Hum<100
	This condition is "5 < Temperature < 15/ 80% < Humidity < 100%". [0 to 99999999 / – / 1 m]
009	15<Temp<=25: 0<=Hum<30
	This condition is "15 < Temperature < 25/ 0% < Humidity < 30%". [0 to 99999999 / – / 1 m]
010	15<Temp<=25: 30<=Hum<55
	This condition is "15 < Temperature < 25/ 30% < Humidity < 55%". [0 to 99999999 / – / 1 m]
011	15<Temp<=25: 55<=Hum<80
	This condition is "15 < Temperature < 25/ 55% < Humidity < 80%". [0 to 99999999 / – / 1 m]
012	15<Temp<=25: 80<=Hum<100
	This condition is "15 < Temperature < 25/ 80% < Humidity < 100%". [0 to 99999999 / – / 1 m]

013	25<Temp<=30: 0<=Hum<30
	This condition is "25 < Temperature < 30/ 0% < Humidity < 30%". [0 to 99999999 / – / 1 m]
014	25<Temp<=30: 30<=Hum<55
	This condition is "25 < Temperature < 30/ 30% < Humidity < 55%". [0 to 99999999 / – / 1 m]
015	25<Temp<=30: 55<=Hum<80
	This condition is "25 < Temperature < 30/ 55% < Humidity < 80%". [0 to 99999999 / – / 1 m]
016	25<Temp<=30: 80<=Hum<100
	This condition is "25 < Temperature < 30/ 80% < Humidity < 100%". [0 to 99999999 / – / 1 m]
017	30<=Temp: 0<=Hum<30
	This condition is "30 < Temperature/ 0% < Humidity < 30%". [0 to 99999999 / – / 1 m]
018	30<=Temp: 30<=Hum<55
	This condition is "30 < Temperature/ 30% < Humidity < 55%". [0 to 99999999 / – / 1 m]
019	30<=Temp: 55<=Hum<80
	This condition is "30 < Temperature/ 55% < Humidity < 80%". [0 to 99999999 / – / 1 m]
020	30<=Temp: 80<=Hum<100
	This condition is "30 < Temperature/ 80% < Humidity < 100%". [0 to 99999999 / – / 1 m]

7964	Operation Env. Log Clear
001	Clears all operation environmental logs

7989

System SP8-xxx: 1

SP8-xxx: Data Log2

Many of these counters are provided for features that are currently not available, such as sending color faxes, and so on. However, here are some Group 8 codes that when used in combination with others, can provide useful information.

SP Numbers	What They Do
SP8 211 to SP8 216	The number of pages scanned to the document server.
SP8 401 to SP8 406	The number of pages printed from the document server
SP8 691 to SP8 696	The number of pages sent from the document server

Specifically, the following questions can be answered:

- How is the document server actually being used?
- What application is using the document server most frequently?
- What data in the document server is being reused?

Most of the SPs in this group are prefixed with a letter that indicates the mode of operation (the mode of operation is referred to as an "application"). Before reading the Group 8 Service Table, make sure that you understand what these prefixes mean.

Prefixes	What it means	
T:	Total: (Grand Total).	Grand total of the items counted for all applications (C, F, P, etc.)..
C:	Copy application.	Totals (pages, jobs, etc.) executed for each application when the job was not stored on the document server.
F:	Fax application.	
P:	Print application.	
S:	Scan application.	

L:	Local storage (document server)	Totals (jobs, pages, etc.) for the document server. The L: counters work differently case by case. Sometimes, they count jobs/pages stored on the document server; this can be in document server mode (from the document server window), or from another mode, such as from a printer driver or by pressing the Store File button in the Copy mode window. Sometimes, they include occasions when the user uses a file that is already on the document server. Each counter will be discussed case by case.
O:	Other applications (external network applications, for example)	Refers to network applications such as Web Image Monitor. Utilities developed with the SDK (Software Development Kit) will also be counted with this group in the future.

The Group 8 SP codes are limited to 17 characters, forced by the necessity of displaying them on the small LCDs of printers and faxes that also use these SPs. Read over the list of abbreviations below and refer to it again if you see the name of an SP that you do not understand.

Key for Abbreviations

Abbreviation	What it means
/	"By", e.g. "T:Jobs/Apl" = Total Jobs "by" Application
>	More (2> "2 or more", 4> "4 or more"
AddBook	Address Book
Apl	Application
B/W	Black & White
Bk	Black
C	Cyan
ColCr	Color Create
ColMode	Color Mode
Comb	Combine
Comp	Compression
Deliv	Delivery

Abbreviation	What it means
DesApl	Designated Application. The application (Copy, Fax, Scan, Print) used to store the job on the document server, for example.
Dev Counter	Development Count, no. of pages developed.
Dup, Duplex	Duplex, printing on both sides
Emul	Emulation
FC	Full Color
FIN	Post-print processing, i.e. finishing (punching, stapling, etc.)
Full Bleed	No Margins
GenCopy	Generation Copy Mode
GPC	Get Print Counter. For jobs 10 pages or less, this counter does not count up. For jobs larger than 10 pages, this counter counts up by the number that is in excess of 10 (e.g., for an 11-page job, the counter counts up 11-10 =1)
IFax	Internet Fax
ImgEdt	Image Edit performed on the original with the copier GUI, e.g. border removal, adding stamps, page numbers, etc.
K	Black (YMCK)
LS	Local Storage. Refers to the document server.
LSize	Large (paper) Size
Mag	Magnification
MC	One color (monochrome)
NRS	New Remote Service (@Remote), which allows a service center to monitor machines remotely. "@Remote" is used overseas, "CSS" is used in Japan.
Org	Original for scanning
OrgJam	Original Jam

Abbreviation	What it means
Palm 2	Print Job Manager/Desk Top Editor: A pair of utilities that allows print jobs to be distributed evenly among the printers on the network, and allows files to moved around, combined, and converted to different formats.
PC	Personal Computer
PGS	Pages. A page is the total scanned surface of the original. Duplex pages count as two pages, and A3 simplex count as two pages if the A3/DLT counter SP is switched ON.
PJob	Print Jobs
Ppr	Paper
PrtJam	Printer (plotter) Jam
PrtPGS	Print Pages
R	Red (Toner Remaining). Applies to the wide format model A2 only. This machine is under development and currently not available.
RCG	Remote Communication Gate
Rez	Resolution
SC	Service Code (Error SC code displayed)
Scn	Scan
Sim, Simplex	Simplex, printing on 1 side.
S-to-Email	Scan-to-E-mail
SMC	SMC report printed with SP5990. All of the Group 8 counters are recorded in the SMC report.
Svr	Server
TonEnd	Toner End
TonSave	Toner Save
TXJob	Send, Transmission
YMC	Yellow, Magenta, Cyan

Abbreviation	What it means
YMCK	Yellow, Magenta, Cyan, Black

Note

- All of the Group 8 SPs are reset with SP5 801 1 Memory All Clear.

8 001	T:Total Jobs	*CTL	These SPs count the number of times each application is used to do a job. [0 to 99999999/ 0 / 1] Note: The L: counter is the total number of times the other applications are used to send a job to the document server, plus the number of times a file already on the document server is used.
8 002	C:Total Jobs	*CTL	
8 004	P:Total Jobs	*CTL	
8 005	S:Total Jobs	*CTL	
8 006	L:Total Jobs	*CTL	

- These SPs reveal the number of times an application is used, not the number of pages processed.
- When an application is opened for image input or output, this counts as one job.
- Interrupted jobs (paper jams, etc.) are counted, even though they do not finish.
- Only jobs executed by the customer are counted. Jobs executed by the customer engineer using the SP modes are not counted.
- When using secure printing (when a password is required to start the print job), the job is counted at the time when either "Delete Data" or "Specify Output" is specified.
- A job is counted as a fax job when the job is stored for sending.
- When a fax is received to fax memory, the F: counter increments but the L: counter does not (the document server is not used).
- A fax broadcast counts as one job for the F: counter (the fax destinations in the broadcast are not counted separately).
- A fax broadcast is counted only after all the faxes have been sent to their destinations. If one transmission generates an error, then the broadcast will not be counted until the transmission has been completed.
- A printed fax report counts as one job for the F: counter.
- The F: counter does not distinguish between fax sending or receiving.
- When a copy job on the document server is printed, SP8022 also increments, and when a print job stored on the document server is printed, SP8024 also increments.
- When an original is both copied and stored on the document server, the C: and L: counters both increment.
- When a print job is stored on the document server, only the L: counter increments.

- When the user presses the Document Server button to store the job on the document server, only the L: counter increments.
- When the user enters document server mode and prints data stored on the document server, only the L: counter increments.
- When an image received from Palm 2 is received and stored, the L: counter increments.
- When the customer prints a report (user code list, for example), the O: counter increments. However, for fax reports and reports executed from the fax application, the F: counter increments.

8 011	T:Jobs/LS	*CTL	These SPs count the number of jobs stored to the document server by each application, to reveal how local storage is being used for input. [0 to 9999999/ **0** / 1] The L: counter counts the number of jobs stored from within the document server mode screen at the operation panel.
8 012	C:Jobs/LS	*CTL	
8 014	P:Jobs/LS	*CTL	
8 015	S:Jobs/LS	*CTL	
8 016	L:Jobs/LS	*CTL	
8 017	O:Jobs/LS	*CTL	

- When a scan job is sent to the document server, the S: counter increments. When you enter document server mode and then scan an original, the L: counter increments.
- When a print job is sent to the document server, the P: counter increments.
- When a network application sends data to the document server, the O: counter increments.
- When an image from Palm 2 is stored on the document server, the O: counter increments.
- When a fax is sent to the document server, the F: counter increments.

8 021	T:Pjob/LS	*CTL	These SPs reveal how files printed from the document server were stored on the document server originally. [0 to 99999999/ 0 / 1] The L: counter counts the number of jobs stored from within the document server mode screen at the operation panel.
8 022	C:Pjob/LS	*CTL	
8 024	P:Pjob/LS	*CTL	
8 025	S:Pjob/LS	*CTL	
8 026	L:Pjob/LS	*CTL	
8 027	O:Pjob/LS	*CTL	

- When a copy job stored on the document server is printed with another application, the C: counter increments.
- When an application like DeskTopBinder merges a copy job that was stored on the document server with a print job that was stored on the document server, the C: and P: counters both increment.

- When a job already on the document server is printed with another application, the L: counter increments.
- When a scanner job stored on the document server is printed with another application, the S: counter increments. If the original was scanned from within document server mode, then the L: counter increments.
- When images stored on the document server by a network application (including Palm 2), are printed with another application, the O: counter increments.
- When a copy job stored on the document server is printed with a network application (Web Image Monitor, for example), the C: counter increments.
- When a fax on the document server is printed, the F: counter increments.

8 031	T:Pjob/DesApl	*CTL	These SPs reveal what applications were used to output documents from the document server. [0 to 99999999/ 0 / 1] The L: counter counts the number of jobs printed from within the document server mode screen at the operation panel.
8 032	C:Pjob/DesApl	*CTL	
8 034	P:Pjob/DesApl	*CTL	
8 035	S:Pjob/DesApl	*CTL	
8 036	L:Pjob/DesApl	*CTL	
8 037	O:Pjob/DesApl	*CTL	

- When documents already stored on the document server are printed, the count for the application that started the print job is incremented.
- When the print job is started from a network application (Desk Top Binder, Web Image Monitor, etc.) the L: counter increments.

8 041	T:TX Jobs/LS	*CTL	These SPs count the applications that stored files on the document server that were later accessed for transmission over the telephone line or over a network (attached to an e-mail, or as a fax image by I-Fax). [0 to 9999999/ **0** / 1] **Note**: Jobs merged for sending are counted separately. The L: counter counts the number of jobs scanned from within the document server mode screen at the operation panel.
8 042	C:TX Jobs/LS	*CTL	
8 044	P:TX Jobs/LS	*CTL	
8 045	S:TX Jobs/LS	*CTL	
8 046	L:TX Jobs/LS	*CTL	
8 047	O:TX Jobs/LS	*CTL	

- When a stored copy job is sent from the document server, the C: counter increments.

- When images stored on the document server by a network application or Palm2 are sent as an e-mail, the O: counter increments.

8 051	T:TX Jobs/DesApl	*CTL	These SPs count the applications used to send files from the document server over the telephone line or over a network (attached to an e-mail, or as a fax image by I-Fax). Jobs merged for sending are counted separately. [0 to 9999999/ **0** / 1] The L: counter counts the number of jobs sent from within the document server mode screen at the operation panel.
8 052	C:TX Jobs/DesApl	*CTL	
8 054	P:TX Jobs/DesApl	*CTL	
8 055	S:TX Jobs/DesApl	*CTL	
8 056	L:TX Jobs/DesApl	*CTL	
8 057	O:TX Jobs/DesApl	*CTL	

- If the send is started from Desk Top Binder or Web Image Monitor, for example, then the O: counter increments.

8 061	T:FIN Jobs	*CTL	[0 to 99999999/ 0 / 1]
	These SPs total the finishing methods. The finishing method is specified by the application.		
8 062	C:FIN Jobs	*CTL	[0 to 99999999/ 0 / 1]
8 064	P:FIN Jobs	*CTL	[0 to 99999999/ 0 / 1]
	These SPs total finishing methods for print jobs only. The finishing method is specified by the application.		
8 065	S:FIN Jobs	*CTL	[0 to 99999999/ 0 / 1]
8 066	L:FIN Jobs	*CTL	[0 to 99999999/ 0 / 1]
8 067	O:FIN Jobs	*CTL	[0 to 99999999/ 0 / 1]
	These SPs total finishing methods for jobs executed by an external application, over the network. The finishing method is specified by the application.		

8 06x 1	Sort	Number of jobs started in Sort mode. When a stored copy job is set for Sort and then stored on the document server, the L: counter increments. (See SP8 066 1)
8 06x 2	Stack	Number of jobs started out of Sort mode.
8 06x 3	Staple	Number of jobs started in Staple mode.

8 06x 4	Booklet	Number of jobs started in Booklet mode. If the machine is in staple mode, the Staple counter also increments.
8 06x 5	Z-Fold	Number of jobs started In any mode other than the Booklet mode and set for folding (Z-fold).
8 06x 6	Punch	Number of jobs started in Punch mode. When Punch is set for a print job, the P: counter increments. (See SP8 064 6.)
8 06x 7	Other	Reserved. Not used.

8 071	T:Jobs/PGS	*CTL	[0 to 99999999/ 0 / 1]
	These SPs count the number of jobs broken down by the number of pages in the job, regardless of which application was used.		
8 072	C:Jobs/PGS	*CTL	[0 to 99999999/ 0 / 1]
8 074	P:Jobs/PGS	*CTL	[0 to 99999999/ 0 / 1]
	These SPs count and calculate the number of print jobs by size based on the number of pages in the job.		
8 075	S:Jobs/PGS	*CTL	[0 to 99999999/ 0 / 1]
8 076	L:Jobs/PGS	*CTL	[0 to 99999999/ 0 / 1]
8 077	O:Jobs/PGS	*CTL	[0 to 99999999/ 0 / 1]
	These SPs count and calculate the number of "Other" application jobs (Web Image Monitor, Palm 2, etc.) by size based on the number of pages in the job.		
8 07x 1	1 Page	8 07x 8	21 to 50 Pages
8 07x 2	2 Pages	8 07x 9	51 to 100 Pages
8 07x 3	3 Pages	8 07x 10	101 to 300 Pages
8 07x 4	4 Pages	8 07x 11	301 to 500 Pages
8 07x 5	5 Pages	8 07x 12	501 to 700 Pages
8 07x 6	6 to 10 Pages	8 07x 13	701 to 1000 Pages
8 07x 7	11 to 20 Pages	8 07x 14	1001 to Pages

- For example: When a copy job stored on the document server is printed in document server mode, the appropriate L: counter (SP8076 0xx) increments.
- Printing a fax report counts as a job and increments the F: counter (SP 8073).
- Interrupted jobs (paper jam, etc.) are counted, even though they do not finish.
- If a job is paused and re-started, it counts as one job.
- If the finisher runs out of staples during a print and staple job, then the job is counted at the time the error occurs.
- For copy jobs (SP 8072) and scan jobs (SP 8075), the total is calculated by multiplying the number of sets of copies by the number of pages scanned. (One duplex page counts as 2.)
- The first test print and subsequent test prints to adjust settings are added to the number of pages of the copy job (SP 8072).
- When printing the first page of a job from within the document server screen, the page is counted.

8 131	T:S-to-Email Jobs	*CTL	[0 to 9999999/ **0** / 1]
	These SPs count the total number of jobs (color or black-and-white) scanned and attached to an e-mail, regardless of whether the document server was used or not.		
8 135	S: S-to-Email Jobs	*CTL	[0 to 9999999/ **0** / 1]
	These SPs count the number of jobs (color or black-and-white) scanned and attached to e-mail, without storing the original on the document server.		
8 13x 1	B/W		
8 13x 2	Color		
8 13x 3	ACS		

- These counters count jobs, not pages.
- If the job is stored on the document server, after the job is stored it is determined to be color or black-and-white then counted.
- If the job is cancelled during scanning, or if the job is cancelled while the document is waiting to be sent, the job is not counted.
- If the job is cancelled during sending, it may or may not be counted, depending on what stage of the process had been reached when the job was cancelled.
- If several jobs are combined for sending to the Scan Router, Scan-to-Email, or Scan-to-PC, or if one job is sent to more than one destination. each send is counted separately. For example, if the same document is sent by Scan-to-Email as well as Scan-to-PC, then it is counted twice (once for Scan-to-Email and once for Scan-to-PC).

8 141	T:Deliv Jobs/Svr	*CTL	[0 to 9999999/ **0** / 1]
	These SPs count the total number of jobs (color or black-and-white) scanned and sent to a Scan Router server.		
8 145	S: Deliv Jobs/Svr	*CTL	[0 to 9999999/ **0** / 1]
	These SPs count the number of jobs (color or black-and-white) scanned in scanner mode and sent to a Scan Router server.		
8 14x 1	B/W		
8 14x 2	Color		
8 14x 3	ACS		

- These counters count jobs, not pages.
- The jobs are counted even though the arrival and reception of the jobs at the Scan Router server cannot be confirmed.
- If even one color image is mixed with black-and-white images, then the job is counted as a "Color" job.
- If the job is cancelled during scanning, or if the job is cancelled while the document is waiting to be delivered, the job is not counted.
- If the job is cancelled during sending, it may or may not be counted, depending on what stage of the process had been reached when the job was cancelled.
- Even if several files are combined for sending, the transmission counts as one job.

8 151	T:Deliv Jobs/PC	*CTL	[0 to 9999999/ **0** / 1]
	These SPs count the total number of jobs (color or black-and-white) scanned and sent to a folder on a PC (Scan-to-PC). **Note**: At the present time, 8 151 and 8 155 perform identical counts.		
8 155	S:Deliv Jobs/PC	*CTL	[0 to 9999999/ **0** / 1]
	These SPs count the total number of jobs (color or black-and-white) scanned and sent with Scan-to-PC.		
8 15x 1	B/W		
8 15x 2	Color		
8 15x 3	ACS		

- These counters count jobs, not pages.
- If the job is cancelled during scanning, it is not counted.
- If the job is cancelled while it is waiting to be sent, the job is not counted.
- If the job is cancelled during sending, it may or may not be counted, depending on what stage of the process had been reached when the job was cancelled.
- Even if several files are combined for sending, the transmission counts as one job.

8 191	T:Total Scan PGS	*CTL	These SPs count the pages scanned by each application that uses the scanner to scan images. [0 to 9999999/ **0** / 1]
8 192	C:Total Scan PGS	*CTL	
8 195	S:Total Scan PGS	*CTL	
8 196	L:Total Scan PGS	*CTL	

- SP 8 191 to 8 196 count the number of scanned sides of pages, not the number of physical pages.
- These counters do not count reading user stamp data, or reading color charts to adjust color.
- Previews done with a scanner driver are not counted.
- A count is done only after all images of a job have been scanned.
- Scans made in SP mode are not counted.

Examples

- If 3 B5 pages and 1 A3 page are scanned with the scanner application but not stored, the S: count is 4.
- If both sides of 3 A4 sheets are copied and stored to the document server using the Store File button in the Copy mode window, the C: count is 6 and the L: count is 6.
- If both sides of 3 A4 sheets are copied but not stored, the C: count is 6.
- If you enter document server mode then scan 6 pages, the L: count is 6.

8 201	T:LSize Scan PGS	*CTL	[0 to 9999999/ **0** / 1]
	These SPs count the total number of large pages input with the scanner for scan and copy jobs. Large size paper (A3/DLT) scanned for fax transmission are not counted. **Note**: These counters are displayed in the SMC Report, and in the User Tools display.		
	These SPs count the total number of large pages input with the scanner for fax transmission. **Note**: These counters are displayed in the SMC Report, and in the User Tools display.		

8 205	S:LSize Scan PGS	*CTL	[0 to 9999999/ **0** / 1]
	These SPs count the total number of large pages input with the scanner for scan jobs only. Large size paper (A3/DLT) scanned for fax transmission are not counted. **Note**: These counters are displayed in the SMC Report, and in the User Tools display.		

8 211	T:Scan PGS/LS	*CTL	These SPs count the number of pages scanned into the document server . [0 to 9999999/ **0** / 1] The L: counter counts the number of pages stored from within the document server mode screen at the operation panel, and with the Store File button from within the Copy mode screen
8 212	C:Scan PGS/LS	*CTL	
8 215	S:Scan PGS/LS	*CTL	
8 216	L:Scan PGS/LS	*CTL	

- Reading user stamp data is not counted.
- If a job is cancelled, the pages output as far as the cancellation are counted.
- If the scanner application scans and stores 3 B5 sheets and 1 A4 sheet, the S: count is 4.
- If pages are copied but not stored on the document server, these counters do not change.
- If both sides of 3 A4 sheets are copied and stored to the document server, the C: count is 6 and the L: count is 6.
- If you enter document server mode then scan 6 pages, the L: count is 6.

8 221	ADF Org Feeds	*CTL	[0 to 9999999/ **0** / 1]
	These SPs count the number of pages fed through the ADF for front and back side scanning.		
8 221 1	Front	Number of front sides fed for scanning: With an ADF that can scan both sides simultaneously, the Front side count is the same as the number of pages fed for either simplex or duplex scanning. With an ADF that cannot scan both sides simultaneously, the Front side count is the same as the number of pages fed for duplex front side scanning. (The front side is determined by which side the user loads face up.)	

8 221 2	Back	Number of rear sides fed for scanning: With an ADF that can scan both sides simultaneously, the Back count is the same as the number of pages fed for duplex scanning. With an ADF that cannot scan both sides simultaneously, the Back count is the same as the number of pages fed for duplex rear-side scanning.

- When 1 sheet is fed for duplex scanning the Front count is 1 and the Back count is 1.
- If a jam occurs during the job, recovery processing is not counted to avoid double counting. Also, the pages are not counted if the jam occurs before the first sheet is output.

8 231	Scan PGS/Mode	*CTL	[0 to 9999999/ **0** / 1]
	These SPs count the number of pages scanned by each ADF mode to determine the work load on the ADF.		
8 231 1	Large Volume	Selectable. Large copy jobs that cannot be loaded in the ADF at one time.	
8 231 2	SADF	Selectable. Feeding pages one by one through the ADF.	
8 231 3	Mixed Size	Selectable. Select "Mixed Sizes" on the operation panel.	
8 231 4	Custom Size	Selectable. Originals of non-standard size.	
8 231 5	Platen	Book mode. Raising the ADF and placing the original directly on the platen.	
8 231 6	Mixed 1side/ 2side	Simplex and Duplex mode.	

- If the scan mode is changed during the job, for example, if the user switches from ADF to Platen mode, the count is done for the last selected mode.
- The user cannot select mixed sizes or non-standard sizes with the fax application so if the original's page sizes are mixed or non-standard, these are not counted.
- If the user selects "Mixed Sizes" for copying in the platen mode, the Mixed Size count is enabled.
- In the SADF mode if the user copies 1 page in platen mode and then copies 2 pages with SADF, the Platen count is 1 and the SADF count is 3.

8 241	T:Scan PGS/Org	*CTL	[0 to 9999999/ **0** / 1]
	These SPs count the total number of scanned pages by original type for all jobs, regardless of which application was used.		

8 242	C:Scan PGS/Org	*CTL	[0 to 9999999/ **0** / 1]
	These SPs count the number of pages scanned by original type for Copy jobs.		
8 245	S:Scan PGS/Org	*CTL	[0 to 9999999/ **0** / 1]
	These SPs count the number of pages scanned by original type for Scan jobs.		
8 246	L:Scan PGS/Org	*CTL	[0 to 9999999/ **0** / 1]
	These SPs count the number of pages scanned and stored from within the document server mode screen at the operation panel, and with the Store File button from within the Copy mode screen		

	8 241	8 242	8 245	8 246
8 24x 1: Text	Yes	Yes	Yes	Yes
8 24x 2: Text/Photo	Yes	Yes	Yes	Yes
8 24x 3: Photo	Yes	Yes	Yes	Yes
8 24x 4: GenCopy, Pale	Yes	Yes	Yes	Yes
8 24x 5: Map	Yes	Yes	No	Yes
8 24x 6: Normal/Detail	Yes	No	No	No
8 24x 7: Fine/Super Fine	Yes	No	No	No
8 24x 8: Binary	Yes	No	Yes	No
8 24x 9: Grayscale	Yes	No	Yes	No
8 24x 10: Color	Yes	No	Yes	No
8 24x 11: Other	Yes	Yes	Yes	Yes

- If the scan mode is changed during the job, for example, if the user switches from ADF to Platen mode, the count is done for the last selected mode.

8 251	T:Scan PGS/ImgEdt	*CTL	These SPs show how many times Image Edit features have been selected at the operation panel for each application. Some examples of these editing features are: • Erase> Border • Erase> Center • Image Repeat • Centering • Positive/Negative [0 to 9999999/ **0** / 1] Note: The count totals the number of times the edit features have been used. A detailed breakdown of exactly which features have been used is not given.
8 252	C:Scan PGS/ImgEdt	*CTL	
8 255	S : Scan PGS/ImgEdr	*CTL	
8 256	L:Scan PGS/ImgEdt	*CTL	
8 257	O:Scan PGS/ImgEdt	*CTL	

The L: counter counts the number of pages stored from within the document server mode screen at the operation panel, and with the Store File button from within the Copy mode screen.

8 261	T:Scan PGS/ColCr	*CTL	-
8 262	C:Scan PGS/ ColCr	*CTL	-
8 265	S:Scn PGS/Color	*CTL	-
8 266	L:Scn PGS/ColCr	*CTL	-
8 26x 1	Color Conversion	These SPs show how many times color creation features have been selected at the operation panel.	
8 26x 2	Color Erase		
8 26x 3	Background		
8 26x 4	Other		

8 281	T:Scan PGS/TWAIN	*CTL	These SPs count the number of pages scanned using a TWAIN driver. These counters reveal how the TWAIN driver is used for delivery functions. [0 to 9999999/ **0** / 1] **Note**: At the present time, these counters perform identical counts.
8 285	S:Scan PGS/TWAIN	*CTL	

8 291	T:Scan PGS/Stamp	*CTL	These SPs count the number of pages stamped with the stamp in the ADF unit. [0 to 9999999/ **0** / 1] The L: counter counts the number of pages stored from within the document server mode screen at the operation panel, and with the Store File button from within the Copy mode screen
8 295	S:Scan PGS/Stamp	*CTL	

8 301	T:Scan PGS/Size	*CTL	[0 to 9999999/ **0** / 1]
	These SPs count by size the total number of pages scanned by all applications. Use these totals to compare original page size (scanning) and output (printing) page size [SP 8-441].		
8 302	C:Scan PGS/Size	*CTL	[0 to 9999999/ **0** / 1]
	These SPs count by size the total number of pages scanned by the Copy application. Use these totals to compare original page size (scanning) and output (printing) page size [SP 8-442].		
	These SPs count by size the total number of pages scanned by the Fax application. Use these totals to compare original page size (scanning) and output page size [SP 8-443].		
8 305	S:Scan PGS/Size	*CTL	[0 to 9999999/ **0** / 1]
	These SPs count by size the total number of pages scanned by the Scan application. Use these totals to compare original page size (scanning) and output page size [SP 8-445].		
8 306	L:Scan PGS/Size	*CTL	[0 to 9999999/ **0** / 1]
	These SPs count by size the total number of pages scanned and stored from within the document server mode screen at the operation panel, and with the Store File button from within the Copy mode screen. Use these totals to compare original page size (scanning) and output page size [SP 8-446].		

8 30x 1	A3	-
8 30x 2	A4	
8 30x 3	A5	
8 30x 4	B4	
8 30x 5	B5	
8 30x 6	DLT	
8 30x 7	LG	
8 30x 8	LT	
8 30x 9	HLT	
8 30x 10	Full Bleed	
8 30x 254	Other (Standard)	
8 30x 255	Other (Custom)	

8 311	T:Scan PGS/Rez	*CTL	[0 to 9999999/ **0** / 1]
	These SPs count by resolution setting the total number of pages scanned by applications that can specify resolution settings.		

8 381	T:Total PrtPGS	*CTL	These SPs count the number of pages printed by the customer. The counter for the application used for storing the pages increments. [0 to 99999999/ 0 / 1] The L: counter counts the number of pages stored from within the document server mode screen at the operation panel. Pages stored with the Store File button from within the Copy mode screen go to the C: counter.
8 382	C:Total PrtPGS	*CTL	
8 384	P:Total PrtPGS	*CTL	
8 385	S:Total PrtPGS	*CTL	
8 386	L:Total PrtPGS	*CTL	
8 387	O:Total PrtPGS	*CTL	

- When the A3/DLT double count function is switched on with SP5104, 1 A3/DLT page is counted as 2.
- When several documents are merged for a print job, the number of pages stored are counted for the application that stored them.

- These counters are used primarily to calculate charges on use of the machine, so the following pages are not counted as printed pages:
- Blank pages in a duplex printing job.
- Blank pages inserted as document covers, chapter title sheets, and slip sheets.
- Reports printed to confirm counts.
- All reports done in the service mode (service summaries, engine maintenance reports, etc.)
- Test prints for machine image adjustment.
- Error notification reports.
- Partially printed pages as the result of a copier jam.

8 391	LSize PrtPGS	*CTL	[0 to 99999999/ 0 / 1]
	These SPs count pages printed on paper sizes A3/DLT and larger. Note: In addition to being displayed in the SMC Report, these counters are also displayed in the User Tools display on the copy machine.		

8 401	T: PrtPGS/LS	*CTL	
8 402	C: PrtPGS/LS	*CTL	
8 404	P: PrtPGS/LS	*CTL	
8 405	S: PrtPGS/LS	*CTL	
8 406	L:T PrtPGS/LS	*CTL	

8 411	Prints/Duplex	*CTL	This SP counts the amount of paper (front/back counted as 1 page) used for duplex printing. Last pages printed only on one side are not counted. [0 to 9999999/ 0 / 1]

8 421	T:PrtPGS/Dup Comb	*CTL	[0 to 99999999/ 0 / 1]
	These SPs count by binding and combine, and n-Up settings the number of pages processed for printing. This is the total for all applications.		
8 422	C:PrtPGS/Dup Comb	*CTL	[0 to 99999999/ 0 / 1]

8 424	P:PrtPGS/Dup Comb	*CTL	[0 to 99999999/ 0 / 1]
	These SPs count by binding and combine, and n-Up settings the number of pages processed for printing by the printer application.		
	S:PrtPGS/Dup Comb	*CTL	[0 to 99999999/ 0 / 1]
	L:PrtPGS/Dup Comb	*CTL	[0 to 99999999/ 0 / 1]
8 427	O:PrtPGS/Dup Comb	*CTL	[0 to 99999999/ 0 / 1]
	These SPs count by binding and combine, and n-Up settings the number of pages processed for printing by Other applications		
8 42x 1	Simplex> Duplex		
8 42x 2	Duplex> Duplex		
8 42x 3	Book> Duplex		
8 42x 4	Simplex Combine		
8 42x 5	Duplex Combine		
8 42x 6	2>	2 pages on 1 side (2-Up)	
8 42x 7	4>	4 pages on 1 side (4-Up)	
8 42x 8	6>	6 pages on 1 side (6-Up)	
8 42x 9	8>	8 pages on 1 side (8-Up)	
8 42x 10	9>	9 pages on 1 side (9-Up)	
8 42x 11	16>	16 pages on 1 side (16-Up)	
8 42x 12	Booklet	-	
8 42x 13	Magazine	-	

- These counts (SP8 421 to SP8 427) are especially useful for customers who need to improve their compliance with ISO standards for the reduction of paper consumption.
- Pages that are only partially printed with the n-Up functions are counted as 1 page.
- Here is a summary of how the counters work for Booklet and Magazine modes:

Booklet		Magazine

Original Pages	Count		Original Pages	Count
1	1		1	1
2	2		2	2
3	2		3	2
4	2		4	2
5	3		5	4
6	4		6	4
7	4		7	4
8	4		8	4

System SP8-xxx: 2

8 431	T:PrtPGS/ImgEdt	*CTL	[0 to 99999999/ 0 / 1]
	These SPs count the total number of pages output with the three features below, regardless of which application was used.		
8 432	C:PrtPGS/ImgEdt	*CTL	[0 to 99999999/ 0 / 1]
8 434	P:PrtPGS/ImgEdt	*CTL	[0 to 99999999/ 0 / 1]
	These SPs count the total number of pages output with the three features below with the print application.		
8 435	C:PrtPGS/ImgEdt	*CTL	[0 to 99999999/ 0 / 1]
8 436	C:PrtPGS/ImgEdt	*CTL	[0 to 99999999/ 0 / 1]
8 437	O:PrtPGS/ImgEdt	*CTL	[0 to 99999999/ 0 / 1]
	These SPs count the total number of pages output with the three features below with Other applications.		
8 43x 1	Cover/Slip Sheet	Total number of covers or slip sheets inserted. The count for a cover printed on both sides counts 2.	
8 43x 2	Series/Book	The number of pages printed in series (one side) or printed as a book with booklet right/left pagination.	
8 43x 3	User Stamp	The number of pages printed where stamps were applied, including page numbering and date stamping.	

8 441	T:PrtPGS/Ppr Size	*CTL	[0 to 99999999/ 0 / 1]
	These SPs count by print paper size the number of pages printed by all applications.		
8 444	P:PrtPGS/Ppr Size	*CTL	[0 to 99999999/ 0 / 1]
	These SPs count by print paper size the number of pages printed by the printer application.		

8 447	O:PrtPGS/Ppr Size	*CTL	[0 to 99999999/ 0 / 1]
	These SPs count by print paper size the number of pages printed by Other applications.		
8 44x 1	A3		
8 44x 2	A4		
8 44x 3	A5		
8 44x 4	B4		
8 44x 5	B5		
8 44x 6	DLT		
8 44x 7	LG		
8 44x 8	LT		
8 44x 9	HLT		
8 44x 10	Full Bleed		
8 44x 254	Other (Standard)		
8 44x 255	Other (Custom)		

- These counters do not distinguish between LEF and SEF.

8 451	PrtPGS/Ppr Tray	*CTL	[0 to 99999999/ 0 / 1]
	These SPs count the number of sheets fed from each paper feed station.		
001	Bypass	Bypass Tray	
002	Tray 1	Copier	
003	Tray 2	Copier	
004	Tray 3	Paper Tray Unit or LCT (Option)	
005	Tray 4	Paper Tray Unit (Option)	
006	Tray 5	Paper Tray Unit (Option)	
007	Tray 6	Currently not used.	

008	Tray 7	Currently not used.
009	Tray 8	Currently not used.
010	Tray 9	Currently not used.
011	Tray 10	
012	Tray 11	

8 461	T:PrtPGS/Ppr Type	*CTL	[0 to 99999999/ 0 / 1]
	These SPs count by paper type the number pages printed by all applications. These counters are not the same as the PM counter. The PM counter is based on feed timing to accurately measure the service life of the feed rollers. However, these counts are based on output timing. Blank sheets (covers, chapter covers, slip sheets) are also counted. During duplex printing, pages printed on both sides count as 1, and a page printed on one side counts as 1.		
8 462	C:PrtPGS/Ppr Type	*CTL	[0 to 99999999/ 0 / 1]
8 464	P:PrtPGS/Ppr Type	*CTL	[0 to 99999999/ 0 / 1]
	These SPs count by paper type the number pages printed by the printer application.		
8 466	L:PrtPGS/Ppr Type	*CTL	[0 to 99999999/ 0 / 1]
8 46x 1	Normal		
8 46x 2	Recycled		
8 46x 3	Special		
8 46x 4	Thick		
8 46x 5	Normal (Back)		
8 46x 6	Thick (Back)		
8 46x 7	OHP		
8 46x 8	Other		

8 471	PrtPGS/Mag	*CTL	[0 to 99999999/ 0 / 1]
	These SPs count by magnification rate the number of pages printed.		
001	< 49%		
002	50% to 99%		
003	100%		
004	101% to 200%		
005	201% <		

- Counts are done for magnification adjusted for pages, not only on the operation panel but performed remotely with an external network application capable of performing magnification adjustment as well.
- Magnification adjustments done with printer drivers with PC applications such as Excel are also counted.
- Magnification adjustments done for adjustments after they have been stored on the document server are not counted.
- Magnification adjustments performed automatically during Auto Reduce/Enlarge copying are counted.
- The magnification rates of blank cover sheets, slip sheets, etc. are automatically assigned a rate of 100%.

8 481	T:PrtPGS/TonSave	*CTL	
8 484	P:PrtPGS/TonSave	*CTL	
	These SPs count the number of pages printed with the Toner Save feature switched on. Note: These SPs return the same results as this SP is limited to the Print application. [0 to 9999999/ 0 / 1]		

8 491	T: PrtPGS/LS	*CTL	
8 492	C: PrtPGS/LS	*CTL	
8 496	P: PrtPGS/LS	*CTL	
8 497	S: PrtPGS/LS	*CTL	
8 50x 1	B/W		

8 50x 2	Mono Color
8 50x 3	Full Color
8 50x 4	Single Color
8 50x 5	Two Color

8 501	T:PrtPGS/Col Mode	*CTL	These SPs count the number of pages printed in the Color Mode by the print application.
8 502	C:PrtPGS/Col Mode	*CTL	
8 504	P:PrtPGS/Col Mode	*CTL	
8 505	S:PrtPGS/Col Mode	*CTL	
8 506	L:PrtPGS/Col Mode	*CTL	
8 507	O:PrtPGS/Col Mode	*CTL	
8 50x 1	B/W		
8 50x 2	Mono Color		
8 50x 3	Full Color		
8 50x 4	Single Color		
8 50x 5	Two Color		

8 511	T:PrtPGS/Emul	*CTL	[0 to 99999999/ 0 / 1]
	These SPs count by printer emulation mode the total number of pages printed.		
8 514	P:PrtPGS/Emul	*CTL	[0 to 99999999/ 0 / 1]
	These SPs count by printer emulation mode the total number of pages printed.		
001	RPCS		
002	RPDL		
003	PS3		
004	R98		
005	R16		
006	GL/GL2		

007	R55
008	RTIFF
009	PDF
010	PCL5e/5c
011	PCL XL
012	IPDL-C
013	BM-Links (Japan Only)
014	Other

- SP8 511 and SP8 514 return the same results as they are both limited to the Print application.
- Print jobs output to the document server are not counted.

8 521	T:PrtPGS/FIN	*CTL	[0 to 99999999 / 0 / 1]
	These SPs count by finishing mode the total number of pages printed by all applications.		
8 522	C:PrtPGS/FIN	*CTL	[0 to 99999999 / 0 / 1]
8 524	P:PrtPGS/FIN	*CTL	[0 to 99999999 / 0 / 1]
	These SPs count by finishing mode the total number of pages printed by the Print application.		
8 525	S:PrtPGS/FIN	*CTL	[0 to 99999999 / 0 / 1]
8 526	L:PrtPGS/FIN	*CTL	[0 to 99999999 / 0 / 1]
8 52x 1	Sort		
8 52x 2	Stack		
8 52x 3	Staple		
8 52x 4	Booklet		
8 52x 5	Z-Fold		
8 52x 6	Punch		
8 52x 7	Other		

Note

- If stapling is selected for finishing and the stack is too large for stapling, the unstapled pages are still counted.
- The counts for staple finishing are based on output to the staple tray, so jam recoveries are counted.

8 531	Staples	*CTL	This SP counts the amount of staples used by the machine. [0 to 99999999 / 0 / 1]

8 581	T:Counter	*CTL	[0 to 99999999 / 0 / 1]
	These SPs count the total output broken down by color output, regardless of the application used. In addition to being displayed in the SMC Report, these counters are also displayed in the User Tools display on the copy machine.		
8 581 1	Total		
002	Total: Full Color		
003	B&W/Single Color		
004	Development: CMY		
005	Development: K		
006	Copy: Color		
007	Copy: B/W		
008	Print: Color		
009	Print: B/W		
010	Total: Color		
011	Total: B/W		
012	Full Color: A3		
013	Full Color: B4 JIS or Smaller		
014	Full Color Print		
015	Mono Color Print		
016	Full Color GPC		

8 582	C:Counter	*CTL	[0 to 99999999/ 0 / 1]
001	B/W		
002	Single Color		
003	Two Color		
004	Full Color		

8 584	P:Counter	*CTL	[0 to 99999999/ 0 / 1]
	These SPs count the total output of the print application broken down by color output.		
001	B/W		
002	Mono Color		
003	Full Color		
004	Single Color		
005	Two Color		

8 586	L:Counter	*CTL	[0 to 99999999/ 0 / 1]
	-		
001	B/W		
002	Single Color		
003	Two Color		
004	Full Color		

8 591	O:Counter	*CTL	[0 to 99999999/ 0 / 1]
	These SPs count the totals for A3/DLT paper use, number of duplex pages printed, and the number of staples used. These totals are for Other (O:) applications only.		
001	A3/DLT		
002	Duplex		

8 601	Coverage Counter	*CTL	[0 to 99999999/ 0 / 1]
	These SPs count the total coverage for each color and the total printout pages for each printing mode.		
001	B/W		
002	Color		
011	B/W Printing Pages		
012	Color Printing Pages		
021	Coverage Counter 1		
022	Coverage Counter 2		
023	Coverage Counter 3		

8 651	T: S-to Email PGS	*CTL	[0 to 99999999/ 0 / 1]
001	B/W		
002	Color		

8 661	T:Deliv PGS/Svr	*CTL	[0 to 9999999/ **0** / 1]
	These SPs count by color mode the total number of pages sent to a Scan Router server by both Scan and LS applications.		
8 665	S:Deliv PGS/Svr	*CTL	[0 to 9999999/ **0** / 1]
	These SPs count by color mode the total number of pages sent to a Scan Router server by the Scan application.		
8 66x 1	B/W		
8 66x 2	Color		

Note

- The B/W and Color counts are done after the document is stored on the HDD of the Scan Router server.
- If the job is canceled before storage on the Scan Router server finishes, the counts are not done.
- The count is executed even if regardless of confirmation of the arrival at the Scan Router server.

8 671	T:Deliv PGS/PC	*CTL	[0 to 9999999/ **0** / 1]
	These SPs count by color mode the total number of pages sent to a folder on a PC (Scan-to-PC) with the Scan and LS applications.		
8 675	S: Deliv PGS/PC	*CTL	[0 to 9999999/ **0** / 1]
	These SPs count by color mode the total number of pages sent with Scan-to-PC with the Scan application.		
8 67x 1	B/W		
8 67x 2	Color		

8 691	T:TX PGS/LS	*CTL	These SPs count the number of pages sent from the document server. The counter for the application that was used to store the pages is incremented. [0 to 9999999/ **0** / 1] The L: counter counts the number of pages stored from within the document server mode screen at the operation panel. Pages stored with the Store File button from within the Copy mode screen go to the C: counter.
8 692	C:TX PGS/LS	*CTL	
8 694	P:TX PGS/LS	*CTL	
8 695	S:TX PGS/LS	*CTL	
8 696	L:TX PGS/LS	*CTL	

Note

- Print jobs done with Web Image Monitor and Desk Top Binder are added to the count.
- If several documents are merged for sending, the number of pages stored are counted for the application that stored them.
- When several documents are sent by a Fax broadcast, the F: count is done for the number of pages sent to each destination.

8 701	TX PGS/Port	*CTL	[0 to 9999999/ **0** / 1]
	These SPs count the number of pages sent by the physical port used to send them. For example, if a 3-page original is sent to 4 destinations via ISDN G4, the count for ISDN (G3, G4) is 12.		
8 701 1	PSTN-1		
8 701 2	PSTN-2		
8 701 3	PSTN-3		
8 701 4	ISDN (G3,G4)		

8 701 5	Network	

8 711	T:Scan PGS/Comp	*CTL	[0 to 9999999/ **0** / 1]
8 715	S:Scan PGS/Comp	*CTL	[0 to 9999999/ **0** / 1]
	These SPs count the number of pages sent by each compression mode.		
8 715 1	JPEG/JPEG2000		
8 715 2	TIFF(Multi/Single)		
8 715 3	PDF		
8 715 4	Other		
8 715 5	PDF/Comp		

8 741	RX PGS/Port	*CTL	[0 to 9999999/ **0** / 1]
	These SPs count the number of pages received by the physical port used to receive them.		
8 741 1	PSTN-1	-	
8 741 2	PSTN-2	-	
8 741 3	PSTN-3	-	
8 741 4	ISDN (G3,G4)	-	
8 741 5	Network	-	

8 771	Dev Counter	*CTL	[0 to 99999999/ 0 / 1]
	These SPs count the frequency of use (number of rotations of the development rollers) for black and other color toners.		
001	Total		
002	K		
003	Y		
004	M		
005	C		

8 781	Toner Bottle Info.	*ENG	[0 to 99999999/ 0 / 1]
	These SPs display the number of already replaced toner bottles. NOTE: Currently, the data in SP7-833-011 through 014 and the data in SP8-781-001 through 004 are the same.		
001	Toner: BK	The number of black-toner bottles	
002	Toner: Y	The number of yellow-toner bottles	
003	Toner: M	The number of magenta-toner bottles	
004	Toner: C	The number of cyan-toner bottles	

8 791	LS Memory Remain	*CTL	This SP displays the percent of space available on the document server for storing documents. [0 to 100 / **0** / 1]

8 801	Toner Remain	*CTL	[0 to 100/ 0 / 1]
	These SPs display the percent of toner remaining for each color. This SP allows the user to check the toner supply at any time. Note: This precise method of measuring remaining toner supply (1% steps) is better than other machines in the market that can only measure in increments of 10 (10% steps).		
001	K		
002	Y		
003	M		
004	C		

8 851	Cvr Cnt: 0 – 10%	-	-
011	0 to 2%		
012	0 to 2%		
013	0 to 2%		
014	0 to 2%		
021	3 to 4%		

022	3 to 4%
023	3 to 4%
024	3 to 4%
031	5 to 7%
032	5 to 7%
033	5 to 7%
034	5 to 7%
041	8 to 10%
042	8 to 10%
043	8 to 10%
044	8 to 10%

8861	Toner Coverage 11-20%		[0 to 9999999 / **0** / 1]
	These SPs count the percentage of dot coverage for black other color toners.		
001	K	Black toner	Do not display for this machine.

8871	Toner Coverage 21-30%		[0 to 9999999 / **0** / 1]
	These SPs count the percentage of dot coverage for black other color toners.		
001	K	Black toner	Do not display for this machine.

8881	Toner Coverage 31 -%		[0 to 9999999 / **0** / 1]
	These SPs count the percentage of dot coverage for black other color toners.		
001	K	Black toner	Do not display for this machine.

8891	Printing PGS: Present Ink	[0 to 9999999 / **0** / 1]
	These SPs display the amount of the remaining current toner.	

8901	Printing PGS: Log: Latest 1	[0 to 9999999 / **0** / 1]
	These SPs display the amount of the remaining previous toner.	

8911	Printing PGS: Log: Latest 2	[0 to 9999999 / **0** / 1]
	These SPs display the amount of the remaining 2nd previous toner.	

8 921	Coverage Count: Total	*CTL	[0 to 99999999/ 0 / 1]
	Displays the total coverage and total printout number for each color.		
001	BK (%)		
002	Y (%)		
003	M (%)		
004	C (%)		
011	BK (Page)		
012	Y (Page)		
013	M (Page)		
014	C (Page)		

8 941	Machine Status	*CTL	[0 to 99999999/ 0 / 1]
	These SPs count the amount of time the machine spends in each operation mode. These SPs are useful for customers who need to investigate machine operation for improvement in their compliance with ISO Standards.		
001	Operation Time	Engine operation time. Does not include time while controller is saving data to HDD (while engine is not operating).	
002	Standby Time	Engine not operating. Includes time while controller saves data to HDD. Does not include time spent in Energy Save, Low Power, or Off modes.	
003	Energy Save Time	Includes time while the machine is performing background printing.	

004	Low Power Time	Includes time in Energy Save mode with Engine on. Includes time while machine is performing background printing.
005	Off Mode Time	Includes time while machine is performing background printing. Does not include time machine remains powered off with the power switches.
006	SC	Total time when SC errors have been staying.
007	PrtJam	Total time when paper jams have been staying during printing.
008	OrgJam	Total time when original jams have been staying during scanning.
009	Supply PM Unit End	Total time when toner end has been staying

8 951	AddBook Register	*CTL	
	These SPs count the number of events when the machine manages data registration.		
8 951 1	User Code/User ID	User code registrations.	[0 to 9999999/ **0** / 1]
8 951 2	Mail Address	Mail address registrations.	
8 951 3	Fax Destination	Fax destination registrations.	
8 951 4	Group	Group destination registrations.	
8 951 5	Transfer Request	Fax relay destination registrations for relay TX.	
8 951 6	F-Code	F-Code box registrations.	
8 951 7	Copy Program	Copy application registrations with the Program (job settings) feature.	[0 to 255 / **0** / 255]
8 951 8	Fax Program	Fax application registrations with the Program (job settings) feature.	
8 951 9	Printer Program	Printer application registrations with the Program (job settings) feature.	
8 951 10	Scanner Program	Scanner application registrations with the Program (job settings) feature.	

8 999	Adomin. Counter List	*CTL	[0 to 99999999/ 0 / 1]
	Displays the total coverage and total printout number for each color.		
001	Total		
006	Printer Full Color		
007	Printer BW		
008	Printer Single Color		
009	Printer Two Color		
0012	A3/DLT		
013	Duplex		
014	Coverage: Color (%)		
015	Coverage: BW (%)		
016	Coverage: Color Print Page (%)		
017	Coverage: BW Print Page (%)		
020	Full Color GPC		

Input Check: 1

Main Machine Input Check: SP5803

This procedure allows you to test sensors and other components of the machine. After you select one of the categories below by number, you will see a small 8-bit table with the number of the bit and its current setting (0 or 1) or current input value from a target device.

In the 8-bit tables, the bits are numbered 0 to 7, reading right to left.

5803	Description	Reading	
		0	1
5803 9	Belt Centering Sensor	Input [mm]	
5803 38	Temp/Humidity Sensor K: Temp	Input [deg]	
5803 39	Temp/Humidity Sensor K: Hum	Input [%RH]	
5803 40	Temp/Humidity Sensor Y: Temp	Input [deg]	
5803 41	Temp/Humidity Sensor Y: Hum	Input [%RH]	
5803 42	T/H Sensor Laser Unit:Temp	Input [deg]	
5803 43	T/H Sensor Laser Unit:Hum	Input [%RH]	
5803 44	Temp/Humidity Sensor Rear:Temp	Input [deg]	
5803 45	Temp/Humidity Sensor Rear:Hum	Input [%RH]	
5803 46	Double-feed Sensor (Recep)	Input [V]	
5803 47	CIS	Input [dot]	

5803 50	RCB-eIO1-PORTB		Reading	
			0	1
	Bit 7	PTR Motor Flag	Off	On
	Bit 6	Duplex Transport Motor 2 Flag	Off	On
	Bit 5	PTR Timing Motor Flag	Off	On
	Bit 4	Shift Roller Unit Motor Flag	Off	On

	Bit 3	PTR Timing Motor Flag	Off	On
	Bit 2	Registration Timing Motor Flag	Off	On
	Bit 1	Registration Entrance Motor Flag	Off	On
	Bit 0	Registration Gate Motor Flag	Off	On

5803 51	RCB-eIO1-PORTL		Reading	
			0	1
	Bit 7		-	-
	Bit 6		-	-
	Bit 5		-	-
	Bit 4		-	-
	Bit 3	PTR Lift Sensor	Off	On
	Bit 2	CIS Fan Alarm	Off	On
	Bit 1	Separation HV Alarm	Off	On
	Bit 0		-	-

5803 52	RCB-H8-PORT7		Reading	
			0	1
	Bit 7		-	-
	Bit 6		-	-
	Bit 5		-	-
	Bit 4		-	-
	Bit 3		-	-
	Bit 2	24VINTA2	Off	On
	Bit 1	24V_2BINT	Off	On
	Bit 0	24VINTA1	Off	On

5803 101	Mst elo1-PortC		Reading	
			0	1
	Bit 7		-	-
	Bit 6		-	-
	Bit 5		-	-
	Bit 4		-	-
	Bit 3	Development Fan Y Alarm	Off	On
	Bit 2	Development Fan M Alarm	Off	On
	Bit 1	Development Fan C Alarm	Off	On
	Bit 0	Development Fan K Alarm	Off	On

5803 102	Mst elo1-PortD		Reading	
			0	1
	Bit 7	Ozone Fan-Y Alarm	Off	On
	Bit 6	Ozone Fan-M Alarm	Off	On
	Bit 5	Ozone Fan-C Alarm	Off	On
	Bit 4	Ozone Fan-K Alarm	Off	On
	Bit 3	Controller Fan1 Alarm	Off	On
	Bit 2	Controller Fan2 Alarm	Off	On
	Bit 1	Controller Fan3 Alarm	Off	On
	Bit 0	Controller Fan4 Alarm	Off	On

5803 103	Mst elo1-PortE		Reading	
			0	1
	Bit 7	PSU Fan 1 Alarm	Off	On
	Bit 6	PSU Fan 2 Alarm	Off	On
	Bit 5	PSU Fan 3 Alarm	Off	On

	Bit 4	PSU Fan 4 Alarm	Off	On
	Bit 3	PSU Fan 5 Alarm	Off	On
	Bit 2	YM Laser Unit Fan	Off	On
	Bit 1	CK Laser Unit Fan	Off	On
	Bit 0	Registration Drawer Set Detection	Off	On

5803 104	Mst elo2-PortA		Reading	
			0	1
	Bit 7	Charge Cleaning Unit HP Sensor Y	Off	On
	Bit 6	Charge Cleaning Unit HP Sensor M	Off	On
	Bit 5	Charge Cleaning Unit HP Sensor C	Off	On
	Bit 4	Charge Cleaning Unit HP Sensor K	Off	On
	Bit 3	Registration Entrance Sensor	Off	On
	Bit 2	LCT Entrance Sensor	Off	On
	Bit 1	Duplex Transport Sensor 3	Off	On
	Bit 0	Duplex Transport Sensor 4	Off	On

5803 105	Mst elo2-PortD		Reading	
			0	1
	Bit 7	Drum Cleaning Unit Set Sensor Y	Off	On
	Bit 6	Drum Cleaning Unit Set Sensor M	Off	On
	Bit 5	Drum Cleaning Unit Set Sensor C	Off	On
	Bit 4	Drum Cleaning Unit Set Sensor K	Off	On
	Bit 3	Drum Cleaning Motor Y	Off	On
	Bit 2	Drum Cleaning Motor M	Off	On
	Bit 1	Drum Cleaning Motor C	Off	On
	Bit 0	Drum Cleaning Motor K	Off	On

5803 106	Mst eIo2-PortF		Reading	
			0	1
	Bit 7	Shift Roller HP Sensor	Off	On
	Bit 6	Registration Gate Lift Sensor	Off	On
	Bit 5	Registration Timing Sensor	Off	On
	Bit 4		-	-
	Bit 3		-	-
	Bit 2		-	-
	Bit 1		-	-
	Bit 0		-	-

5803 107	Mst eIo2-PortL		Reading	
			0	1
	Bit 7	Toner End Sensor Y	Off	On
	Bit 6	Toner End Sensor M	Off	On
	Bit 5	Toner End Sensor C	Off	On
	Bit 4	Toner End Sensor K	Off	On
	Bit 3	Not used	-	-
	Bit 2	Not used	-	-
	Bit 1	Not used	-	-
	Bit 0	Not used	-	-

5803 108	Mst eIo3-PortA		Reading	
			0	1
	Bit 7	Development Roller Rotation Sensor Y	Off	On
	Bit 6	Development Unit Y Set Detection	Off	On

	Bit 5	Development Unit Y Color Detection: Bit0	Off	On
	Bit 4	Development Unit Y Color Detection: Bit1	Off	On
	Bit 3	Development Roller Rotation Sensor M	Off	On
	Bit 2	Development Unit M Set Detection	Off	On
	Bit 1	Development Unit M Color Detection: Bit0	Off	On
	Bit 0	Development Unit M Color Detection: Bit1	Off	On

5803 109	Mst elo3-PortB		Reading	
			0	1
	Bit 7	Development Roller Rotation Sensor C	Off	On
	Bit 6	Development Unit C Set Detection	Off	On
	Bit 5	Development Unit C Color Detection: Bit0	Off	On
	Bit 4	Development Unit C Color Detection: Bit1	Off	On
	Bit 3	Development Roller Rotation Sensor K	Off	On
	Bit 2	Development Unit K Set Detection	Off	On
	Bit 1	Development Unit K Color Detection: Bit0	Off	On
	Bit 0	Development Unit K Color Detection: Bit1	Off	On

5803 110	Mst elo3-PortD	Reading	
		0	1

	Bit 7	Development Motor Y	Off	On
	Bit 6	Development Motor M	Off	On
	Bit 5	Development Motor C	Off	On
	Bit 4	Development Motor K	Off	On
	Bit 3		-	-
	Bit 2		-	-
	Bit 1	Waste Toner Transport Motor 1	Off	On
	Bit 0	Toner Supply Motor	Off	On

5803 111	Mst elo4-PortB		Reading	
			0	1
	Bit 7	Y Charge HV Alarm	Off	On
	Bit 6	Y Grid HV Alarm	Off	On
	Bit 5	Y Bias HV Alarm	Off	On
	Bit 4	M Charge HV Alarm	Off	On
	Bit 3	M Grid HV Alarm	Off	On
	Bit 2	M Bias HV Alarm	Off	On
	Bit 1	Toner Bottle Motor Y Error	Off	On
	Bit 0	Toner Bottle Motor M Error	Off	On

5803 112	Mst elo4-PortC		Reading	
			0	1
	Bit 7	C Charge HV Alarm	Off	On
	Bit 6	C Grid HV Alarm	Off	On
	Bit 5	C Bias HV Alarm	Off	On
	Bit 4	K Charge HV Alarm	Off	On
	Bit 3	K Grid HV Alarm	Off	On

	Bit 2	K Bias HV Alarm	Off	On
	Bit 1	Toner Bottle Motor C Error	Off	On
	Bit 0	Toner Bottle Motor K Error	Off	On

5803 113	Mst elo4-PortE		Reading	
			0	1
	Bit 7		-	-
	Bit 6		-	-
	Bit 5		-	-
	Bit 4		-	-
	Bit 3	Toner Hopper Door Switch	Off	On
	Bit 2		-	-
	Bit 1	Key Card Set Detection	Off	On
	Bit 0	Key Counter Set Detection	Off	On

5803 114	Mst elo2-PortM		Reading	
			0	1
	Bit 7		-	-
	Bit 6		-	-
	Bit 5		-	-
	Bit 4	Development CK Fan	Off	On
	Bit 3	Registration Fan	Off	On
	Bit 2		-	-
	Bit 1		-	-
	Bit 0		-	-

5803 115	Mst elo3-PortE		Reading	
			0	1
	Bit 7	+24V_2AINT	Off	On
	Bit 6	+24V_2BINT	Off	On
	Bit 5	+24V_1AINT	Off	On
	Bit 4	+24V_4A	Off	On
	Bit 3	+24V_4B	Off	On
	Bit 2	+24VINTA	Off	On
	Bit 1	TSNS_VCC	Off	On
	Bit 0		-	-

5803 116	Mst elo1-PortF		Reading	
			0	1
	Bit 7		-	-
	Bit 6	Not used	-	-
	Bit 5	Not used	-	-
	Bit 4		-	-
	Bit 3		-	-
	Bit 2		-	-
	Bit 1		-	-
	Bit 0		-	-

5803 117	Mst elo1-PortP		Reading	
			0	1
	Bit 7		-	-
	Bit 6		-	-
	Bit 5		-	-

	Bit 4		-	-
	Bit 3		-	-
	Bit 2	Fusing Exhaust Fan 1	Off	On
	Bit 1	Fusing Exhaust Fan 2	Off	On
	Bit 0	Fusing Exhaust Fan 3	Off	On

5803 118	Mst elo5-PortL		Reading	
			0	1
	Bit 7		-	-
	Bit 6	Waste Toner Bottle Full SensorNot used	Off	On
	Bit 5		-	-
	Bit 4		-	-
	Bit 3		-	-
	Bit 2		-	-
	Bit 1		-	-
	Bit 0		-	-

5803 119	Mst elo5-PortM		Reading	
			0	1
	Bit 7		-	-
	Bit 6		-	-
	Bit 5	PTB Cooling Fan	Off	On
	Bit 4		-	-
	Bit 3		-	-
	Bit 2		-	-

	Bit 1	Waste Toner Bottle Near-Full Sensor	Off	On
	Bit 0		-	-

5803 120	Mst elo5-PortB		Reading	
			0	1
	Bit 7	Fusing Fan 1	Off	On
	Bit 6	Fusing Fan 2	Off	On
	Bit 5	Fusing Fan 3	Off	On
	Bit 4	Fusing Fan 4	Off	On
	Bit 3	Fusing Fan 5	Off	On
	Bit 2	Fusing Fan 6	Off	On
	Bit 1	PTB FAN 1	Off	On
	Bit 0	PTB FAN 2	Off	On

5803 121	Mst elo5-PortC		Reading	
			0	1
	Bit 7	Paper Cooling Fan 3	Off	On
	Bit 6	Paper Cooling Fan 1	Off	On
	Bit 5	Paper Cooling Fan 2	Off	On
	Bit 4	ITB FAN	Off	On
	Bit 3	Exit Fan	Off	On
	Bit 2		Off	On
	Bit 1		Off	On
	Bit 0	PTB FAN 2	Off	On

5803 122	Mst elo5-PortD		Reading	
			0	1
	Bit 7	Not used	-	-
	Bit 6	Waste Toner Bottle Set Sensor	Off	On
	Bit 5	Decurler Unit HP Sensor	Off	On
	Bit 4	Decurler Unit Limit Sensor	Off	On
	Bit 3	Paper Exit Sensor	Off	On
	Bit 2	Switchback Lower Sensor	Off	On
	Bit 1	Exit Junction Timing Sensor	Off	On
	Bit 0	Switchback Sensor	Off	On

5803 123	Mst elo5-PortE		Reading	
			0	1
	Bit 7	Duplex Transport Sensor 1	Off	On
	Bit 6	Duplex Transport Sensor 2	Off	On
	Bit 5	Inverter/ Paper Exit Drawer Set Detection	Off	On
	Bit 4	Accordion Jam Sensor	Off	On
	Bit 3	Pressure Roller Lift Sensor	Off	On
	Bit 2	Oil End Sensor	Off	On
	Bit 1	Web End Sensor	Off	On
	Bit 0	+24V Power	Off	On

5803 124	Mst elo5-PortF		Reading	
			0	1
	Bit 7	+24VINT Power	Off	On

	Bit 6	Waste Toner Transport Motor 2 Sensor	Off	On
	Bit 5		-	-
	Bit 4		-	-
	Bit 3		-	-
	Bit 2		-	-
	Bit 1		-	-
	Bit 0		-	-

5803 125	Mst elo5-PortJ		Reading	
			0	1
	Bit 7		-	-
	Bit 6		-	-
	Bit 5	Fusing Exit Sensor	Off	On
	Bit 4	PTB Jam Sensor	Off	On
	Bit 3		-	-
	Bit 2		-	-
	Bit 1		-	-
	Bit 0		-	-

Input Check: 2

Main Machine Input Check: SP5803

5803 126	Mst eIo5-PortP		Reading	
			0	1
	Bit 7		-	-
	Bit 6		-	-
	Bit 5	Waste Toner Transport Motor 2	Off	On
	Bit 4	Paper Exit Motor Overload Signal	Off	On
	Bit 3	Fusing Unit Drawer Set Detection	Off	On
	Bit 2	Fusing Motor Overload Signal	Off	On
	Bit 1		-	-
	Bit 0		-	-

5803 127	Mst eIo6-PortE		Reading	
			0	1
	Bit 7		-	-
	Bit 6		-	-
	Bit 5		-	-
	Bit 4	PTR HV Alarm	Off	On
	Bit 3	K ITB Roller HV Alarm	Off	On
	Bit 2	C ITB Roller HV Alarm	Off	On
	Bit 1	M ITB Roller HV Alarm	Off	On
	Bit 0	Y ITB Roller HV Alarm	Off	On

5803 128	Mst elo6-PortF		Reading	
			0	1
	Bit 7		-	-
	Bit 6	Front Left Door Open Switch	Off	On
	Bit 5	Inverter Motor Fan	Off	On
	Bit 4		-	-
	Bit 3		-	-
	Bit 2		-	-
	Bit 1		-	-
	Bit 0		-	-

5803 129	Mst elo6-PortJ		Reading	
			0	1
	Bit 7		-	-
	Bit 6		-	-
	Bit 5	Not used	-	-
	Bit 4	Front Door Open Detection	Off	On
	Bit 3		-	-
	Bit 2		-	-
	Bit 1		-	-
	Bit 0		-	-

5803 130	Mst elo3-PortL		Reading	
			0	1
	Bit 7		-	-
	Bit 6		-	-
	Bit 5	+24V_EA1CH2INT	Off	On

	Bit 4	+24V_EA2CH4	Off	On
	Bit 3	+24V_EA1CH1INT	Off	On
	Bit 2	+24VINT	Off	On
	Bit 1		-	-
	Bit 0		-	-

5803 131	Mst elo4-PortA		Reading	
			0	1
	Bit 7	Drum Motor Y Flag	Off	On
	Bit 6	Drum Motor M Flag	Off	On
	Bit 5	Drum Motor C Flag	Off	On
	Bit 4	Drum Motor K Flag	Off	On
	Bit 3	Charge Cleaning Motor Y Flag	Off	On
	Bit 2	Charge Cleaning Motor M Flag	Off	On
	Bit 1	Charge Cleaning Motor C Flag	Off	On
	Bit 0	Charge Cleaning Motor K Flag	Off	On

5803 132	Mst elo5-PortA		Reading	
			0	1
	Bit 7		-	-
	Bit 6		-	-
	Bit 5		-	-
	Bit 4		-	-
	Bit 3		-	-
	Bit 2		-	-
	Bit 1	Oil Pump Alarm	Off	On
	Bit 0	Oil Supply Unit Sensor	Off	On

5803 133	Mst elo6-PortA		Reading	
			0	1
	Bit 7	+24V_3A	Off	On
	Bit 6	+24V_3B	Off	On
	Bit 5	+24V_3C	Off	On
	Bit 4		-	-
	Bit 3		-	-
	Bit 2		-	-
	Bit 1		-	-
	Bit 0		-	-

5803 134	Mst elo6-PortB		Reading	
			0	1
	Bit 7	+24VINT	Off	On
	Bit 6		-	-
	Bit 5		-	-
	Bit 4		-	-
	Bit 3		-	-
	Bit 2		-	-
	Bit 1		-	-
	Bit 0		-	-

5803 135	Mst elo6-PortC		Reading	
			0	1
	Bit 7		-	-
	Bit 6		-	-
	Bit 5		-	-

	Bit 4		-	-
	Bit 3		-	-
	Bit 2		-	-
	Bit 1	Mechanical Counter 2 Set Detection	Off	On
	Bit 0	Mechanical Counter 1 Set Detection	Off	On

5803 136	Mst elo6-PortD		Reading	
			0	1
	Bit 7		-	-
	Bit 6		-	-
	Bit 5		-	-
	Bit 4		-	-
	Bit 3		-	-
	Bit 2		-	-
	Bit 1	PTB Motor Flag	Off	On
	Bit 0		-	-

5803 137	Mst elo6-PortL		Reading	
			0	1
	Bit 7		-	-
	Bit 6	FIB Boost Converter 3 Error	Off	On
	Bit 5		-	-
	Bit 4		-	-
	Bit 3	FIB Boost Converter 1 Error	Off	On
	Bit 2		-	-

	Bit 1	FIB Boost Converter 2 Error	Off	On
	Bit 0		-	-

5803 138	Mst elo6-PortM		Reading	
			0	1
	Bit 7		-	-
	Bit 6		-	-
	Bit 5	Inverter Motor Flag	Off	On
	Bit 4		-	-
	Bit 3	Not used	-	-
	Bit 2		-	-
	Bit 1		-	-
	Bit 0		-	-

5803 139	Mst elo6-PortP		Reading	
			0	1
	Bit 7		-	-
	Bit 6	Duplex Transport Motor Flag	Off	On
	Bit 5		-	-
	Bit 4	Not used	-	-
	Bit 3	Decarler Feed Motor Flag	Off	On
	Bit 2	Pressure Roller Lift Motor Flag	Off	On
	Bit 1	Decarler Drive Motor Flag	Off	On
	Bit 0	Oil Supply Motor Flag	Off	On

5803 140	CTB_H8S-PORT9 (Buffer Pass Unit: M379)	Reading	
		0	1

	Bit 7	Reserve Fan 4	-	-
	Bit 6	Reserved	-	-
	Bit 5	Lower Exhaust Fan	Normal	Error
	Bit 4	Lower Exhaust Fan	Normal	Error
	Bit 3	Reserve Fan 3	-	-
	Bit 2	Reserved	-	-
	Bit 1	Lower Cooling Fan	Normal	Error
	Bit 0	Lower Cooling Fan	Normal	Error

5803 141	CTB_H8S-PortA (Buffer Pass Unit: M379)		**Reading**	
			0	**1**
	Bit 7	Interlock Switch: Front Door	Close	Open
	Bit 6	Debug monitor	SCI	
	Bit 5	Debug monitor	SCI	
	Bit 4	LED	On	Off
	Bit 3	Not used	-	-
	Bit 2	Not used	-	-
	Bit 1	Not used	-	-
	Bit 0	Not used	-	-

5803 142	CTB_H8S-PortB (Buffer Pass Unit: M379)		**Reading**	
			0	**1**
	Bit 7	Drive Motor Left	Normal	Error
	Bit 6	Drive Motor Right	Normal	Error
	Bit 5	Drive Motor Left	Motor Lock	
	Bit 4	Drive Motor Left	CCW	CW
	Bit 3	Drive Motor Left	On	Off

	Bit 2	Drive Motor Right	Motor Lock	
	Bit 1	Drive Motor Right	CCW	CW
	Bit 0	Drive Motor Right	On	Off

5803 143	CTB_H8S-PortC (Buffer Pass Unit: M379)		**Reading**	
			0	**1**
	Bit 7	Reserve Fan 2	-	-
	Bit 6	Reserved	-	-
	Bit 5	Upper Exhaust Fan	Normal	Error
	Bit 4	Upper Exhaust Fan	Normal	Error
	Bit 3	Reserve Fan 1	-	-
	Bit 2	Reserved	-	-
	Bit 1	Upper Cooling Fan	Normal	Error
	Bit 0	Upper Cooling Fan	Normal	Error

5803 144	CTB_H8S-PortD (Buffer Pass Unit: M379)		**Reading**	
			0	**1**
	Bit 7	Transport Sensor 6	Paper detected	Paper not detected
	Bit 6	Transport Sensor 3	Paper detected	Paper not detected
	Bit 5	Transport Sensor 7	Paper detected	Paper not detected
	Bit 4	Transport Sensor 2	Paper detected	Paper not detected
	Bit 3	Transport Sensor 8	Paper detected	Paper not detected
	Bit 2	Transport Sensor 1	Paper detected	Paper not detected

	Bit 1	Not used	-	-
	Bit 0	Not used	-	-

5803 145	CTB_H8S-PortE (Buffer Pass Unit: M379)		Reading	
			0	1
	Bit 7	Not used	-	-
	Bit 6	Not used	-	-
	Bit 5	+24V	+24V On	+24V Off
	Bit 4	+24V INT	+24V_INT On	+24V_INT Off
	Bit 3	Not used	-	-
	Bit 2	Not used	-	-
	Bit 1	Transport Sensor 5	Paper detected	Paper not detected
	Bit 0	Transport Sensor 4	Paper detected	Paper not detected

5803	Description	Reading	
		0	1
5803 150	Htg Roller Thermistor 1	Input [deg]	
5803 151	Prs Roller Thermistor 2		
5803 152	Thermopile		
5803 154	IOB:3V Std Voltage (S)	Input [V]	

5803 155	Slv elo1-PortK		Reading	
			0	1
	Bit 7	-	-	-
	Bit 6	-	-	-
	Bit 5	-	-	-

	Bit 4	1st Paper Feed Motor Flag	Off	On
	Bit 3	-	-	-
	Bit 2	-	-	-
	Bit 1	-	-	-
	Bit 0	-	-	-

5803 156	Slv elo1-PortL		Reading	
			0	1
	Bit 7	-	-	-
	Bit 6	1st Grip Motor	Off	On
	Bit 5	-	-	-
	Bit 4	-	-	-
	Bit 3	-	-	-
	Bit 2	-	-	-
	Bit 1	2nd Paper Feed Motor	Off	On
	Bit 0	-	-	-

5803 157	Slv elo1-PortM		Reading	
			0	1
	Bit 7	-	-	-
	Bit 6	-	-	-
	Bit 5	-	-	-
	Bit 4	-	-	-
	Bit 3	2nd Grip Motor	Off	On
	Bit 2	-	-	-
	Bit 1	-	-	-
	Bit 0	-	-	-

5803 158	Slv elo2-PortJ		Reading	
			0	1
	Bit 7	-	-	-
	Bit 6	-	-	-
	Bit 5	Zero Cross 1	Off	On
	Bit 4	Belt Centering Roller Sensor	Off	On
	Bit 3	-	-	-
	Bit 2	-	-	-
	Bit 1	-	-	-
	Bit 0	-	-	-

5803 159	Slv elo2-PortK		Reading	
			0	1
	Bit 7	-	-	-
	Bit 6	-	-	-
	Bit 5	Vertical Relay Mot	Off	On
	Bit 4	-	-	-
	Bit 3	-	-	-
	Bit 2	-	-	-
	Bit 1	-	-	-
	Bit 0	-	-	-

5803 160	Slv elo2-PortL		Reading	
			0	1
	Bit 7	-	-	-
	Bit 6	ITB Color Lift Motor Flag	Off	On
	Bit 5	-	-	-

	Bit 4	-	-	-
	Bit 3	-	-	-
	Bit 2	-	-	-
	Bit 1	Belt Centering Roller Motor Flag	Off	On
	Bit 0	-	-	-

5803 161	Slv elo1-PortB		Reading	
			0	1
	Bit 7	Paper Feed Sensor 1	Off	On
	Bit 6	Paper End Sensor 1	Off	On
	Bit 5	Vertical Transport Sensor 1	Off	On
	Bit 4	Paper Feed Sensor 2	Off	On
	Bit 3	Paper End Sensor 2	Off	On
	Bit 2	Vertical Transport Sensor 2	Off	On
	Bit 1	Tray Lift Sensor 1	Off	On
	Bit 0	Tray Lift Sensor 2	Off	On

Input Check: 3

Main Machine Input Check: SP5803

5803 162	Slv elo2-PortM		Reading	
			0	1
	Bit 7	-	-	-
	Bit 6	-	-	-
	Bit 5	-	-	-
	Bit 4	-	-	-
	Bit 3	ITB Black Lift Motor Flag	Off	On
	Bit 2	-	-	-
	Bit 1	-	-	-
	Bit 0	-	-	-

5803 164	Slv elo1-PortN		Reading	
			0	1
	Bit 7	-	-	-
	Bit 6	-	-	-
	Bit 5	2nd Tray Lift Motor: Paper Height Sensor 1	Off	On
	Bit 4	2nd Tray Lift Motor: Paper Height Sensor 2	Off	On
	Bit 3	Rear Fence HP Sensor	Off	On
	Bit 2	Rear Fence Return Sensor	Off	On
	Bit 1	Left Tray Paper Sensor	Off	On
	Bit 0	-	-	-

5803 165	Slv elo2-PortA		Reading	
			0	1
	Bit 7	Paper Height Sensor 1	Off	On
	Bit 6	Paper Height Sensor 2	Off	On
	Bit 5	Paper Height Sensor 3	Off	On
	Bit 4	Paper Height Sensor 4	Off	On
	Bit 3	Front Side Fence Open Sensor	Off	On
	Bit 2	Front Side Fence Close Sensor	Off	On
	Bit 1	Rear Side Fence Open Sensor	Off	On
	Bit 0	Rear Side Fence Close Sensor	Off	On

5803 166	Slv elo2-PortC		Reading	
			0	1
	Bit 7	ITB Unit Drawer Set Detection	Off	On
	Bit 6	-	-	-
	Bit 5	-	-	-
	Bit 4	-	-	-
	Bit 3	-	-	-
	Bit 2	-	-	-
	Bit 1	-	-	-
	Bit 0	ITB Cleaning Motor	Off	On

5803 167	Slv elo2-PortE		Reading	
			0	1
	Bit 7	Tray1: Right Tray Set Detection	Off	On
	Bit 6	Tray1: Left Tray Set Detection	Off	On
	Bit 5	Right Tray 1 Paper Sensor	Off	On

	Bit 4	Paper Size Switch 1	Off	On
	Bit 3	Paper Size Switch 2	Off	On
	Bit 2	Paper Size Switch 3	Off	On
	Bit 1	Paper Size Switch 4	Off	On
	Bit 0	Paper Size Switch 5	Off	On

5803 168	Slv elo2-PortF		Reading	
			0	1
	Bit 7	Lower Limit Sensor	Off	On
	Bit 6	Zero Cross 1	Off	On
	Bit 5	-	-	-
	Bit 4	-	-	-
	Bit 3	-	-	-
	Bit 2	-	-	-
	Bit 1	-	-	-
	Bit 0	-	-	-

5803 169	Slv elo2-PortN		Reading	
			0	1
	Bit 7	-	-	-
	Bit 6	-	-	-
	Bit 5	-	-	-
	Bit 4	ITB Drive Motor Flag	Off	On
	Bit 3	ITB Black Lift Sensor	Off	On
	Bit 2	ITB Color Lift Sensor	Off	On
	Bit 1	ITB Cleaning Unit Set Sensor	Off	On
	Bit 0	-	-	-

5803	Description	Reading	
		0	1
5803 170	Belt Overrun Sensor:Front	Not overrun	Overrun
5803 171	Belt Overrun Sensor:Rear	Not overrun	Overrun
5803 172	PTR Timing Sensor	No paper detected	Paper detected

5803 181	A4LCT:CPU-Port7 (M077 only)		Reading	
			0	1
	Bit 7	LCT Exit Sensor	Paper detected	Not detected
	Bit 6	-	-	-
	Bit 5	-	-	-
	Bit 4	-	-	-
	Bit 3	LCT Front Door Safety Switch	Close	Open
	Bit 2	-	-	-
	Bit 1	-	-	-
	Bit 0	-	-	-

5803 182	A4LCT:eIO2-PortP (M077 only)		Reading	
			0	1
	Bit 7	-	-	-
	Bit 6	-	-	-
	Bit 5	-	-	-
	Bit 4	-	-	-
	Bit 3	-	-	-
	Bit 2	-	-	-
	Bit 1	Transport Sensor Bypass	Paper detected	Not detected

	Bit 0	-	-	-

5803 183	A4LCT:eIO2-PortA (M077 only)		Reading	
			0	1
	Bit 7	3rd Transport Sensor	Paper detected	Not detected
	Bit 6	3rd Lift Sensor	Upper limit	Not upper limit
	Bit 5	3rd Paper End Sensor	Paper detected	Not detected
	Bit 4	3rd Paper Feed Sensor	Paper detected	Not detected
	Bit 3	-	-	-
	Bit 2	3rd Paper Size Sensor 3	On	Off
	Bit 1	3rd Paper Size Sensor 2	On	Off
	Bit 0	3rd Paper Size Sensor 1	On	Off

Note

- When this LCT is installed in another mainframe, the upper tray of this LCT may show "4th".

5803 184	A4LCT:eIO2-PortB (M077 only)		Reading	
			0	1
	Bit 7	-	-	-
	Bit 6	-	-	-
	Bit 5	-	-	-
	Bit 4	-	-	-
	Bit 3	3rd Paper Height Sensor 4	Off	On
	Bit 2	3rd Paper Height Sensor 3	Off	On
	Bit 1	3rd Paper Height Sensor 2	Off	On
	Bit 0	3rd Paper Height Sensor 1	Off	On

Note

- When this LCT is installed in another mainframe, the upper tray of this LCT may show "4th".

5803 185	A4LCT:eIO2-PortC (M077 only)		Reading	
			0	1
	Bit 7	4th Transport Sensor	Paper detected	Not detected
	Bit 6	4th Lift Sensor	Upper limit	Not upper limit
	Bit 5	4th Paper End Sensor	Paper detected	Not detected
	Bit 4	4th Paper Feed Sensor	Paper detected	Not detected
	Bit 3	-	-	-
	Bit 2	4th Paper Size Sensor 3	On	Off
	Bit 1	4th Paper Size Sensor 2	On	Off
	Bit 0	4th Paper Size Sensor 1	On	Off

Note

- When this LCT is installed in another mainframe, the upper tray of this LCT may show "5th".

5803 186	A4LCT:eIO2-PortD (M077 only)		Reading	
			0	1
	Bit 7	-	-	-
	Bit 6	-	-	-
	Bit 5	-	-	-
	Bit 4	-	-	-
	Bit 3	4th Paper Height Sensor 4	Off	On
	Bit 2	4th Paper Height Sensor 3	Off	On
	Bit 1	4th Paper Height Sensor 2	Off	On
	Bit 0	4th Paper Height Sensor 1	Off	On

Note

- When this LCT is installed in another mainframe, the upper tray of this LCT may show "5th".

5803 187	A4LCT:eIO3-PortA (M077 only)		Reading	
			0	1
	Bit 7	5th Transport Sensor	Paper detected	Not detected
	Bit 6	5th Lift Sensor	Upper limit	Not upper limit
	Bit 5	5th Paper End Sensor	Paper detected	Not detected
	Bit 4	5th Paper Feed Sensor	Paper detected	Not detected
	Bit 3	-	-	-
	Bit 2	5th Paper Size Sensor 3	On	Off
	Bit 1	5th Paper Size Sensor 2	On	Off
	Bit 0	5th Paper Size Sensor 1	On	Off

Note

- When this LCT is installed in another mainframe, the upper tray of this LCT may show "6th".

5803 188	A4LCT:eIO3-PortB (M077 only)		Reading	
			0	1
	Bit 7	-	-	-
	Bit 6	-	-	-
	Bit 5	-	-	-
	Bit 4	-	-	-
	Bit 3	5th Paper Height Sensor 4	Off	On
	Bit 2	5th Paper Height Sensor 3	Off	On
	Bit 1	5th Paper Height Sensor 2	Off	On
	Bit 0	5th Paper Height Sensor 1	Off	On

Note

- When this LCT is installed in another mainframe, the upper tray of this LCT may show "6th".

5803 189	A4LCT:eIO2-PortE **(M077 only)** (By-pass Unit B833)		**Reading**	
			0	**1**
	Bit 7	-	-	-
	Bit 6	-	-	-
	Bit 5	Paper Length Sensor	On	Off
	Bit 4	Paper Width Switch 5	On	Off
	Bit 3	Paper Width Switch 4	On	Off
	Bit 2	Paper Width Switch 3	On	Off
	Bit 1	Paper Width Switch 2	On	Off
	Bit 0	Paper Width Switch 1	On	Off

5803 190	A4LCT:eIO3-PortC **(M077 only)** (By-pass Unit B833)		**Reading**	
			0	**1**
	Bit 7	Relay Sensor	Paper detected	Not detected
	Bit 6	Lift Sensor	Upper limit	Not upper limit
	Bit 5	Paper End Sensor	Paper detected	Not detected
	Bit 4	Paper Feed Sensor	Paper detected	Not detected
	Bit 3	-	-	-
	Bit 2	-	-	-
	Bit 1	-	-	-
	Bit 0	-	-	-

5803 191	A4LCT:eIO3-PortD **(M077 only)**		**Reading**	
			0	**1**
	Bit 7	Feed Unit Slide Detection	Close	Open
	Bit 6	Feed Unit Set Detection	Set	Not set
	Bit 5	-	-	-

	Bit 4	Tray Lift Switch	On (Pushed)	Off
	Bit 3	Tray Lower Limit Sensor	Not lower limit	Lower limit
	Bit 2	-	-	-
	Bit 1	Paper End Sensor	Off	On
	Bit 0	Paper Near End Sensor	Off	On

5803	**Description**	**Reading**	
		0	**1**
5803 201	Platen Cover Sensor **(D095 only)**	Open	Close

5803 202	Scanner fan lock signal **(D095 only)**		**Reading**	
			0	**1**
	Bit 7	Scanner HP Sensor	Not HP	HP
	Bit 6	Lamp Regulator Fan (Right)	Normal	Lock
	Bit 5	SBU Cooling Fan	Normal	Lock
	Bit 4	Scanner Intake Fan	Normal	Lock
	Bit 3	Scanner Unit Exhaust Fan	Normal	Lock
	Bit 2	Lamp Regulator Fan (Left)	Normal	Lock
	Bit 1	Scanner Motor Cooling Fan	Normal	Lock
	Bit 0	Not used	-	-

5803 211	A3LCT1:CPU-Port7		**Reading**	
			0	**1**
	Bit 7	-	-	-
	Bit 6	-	-	-
	Bit 5	-	-	-
	Bit 4	-	-	-

	Bit 3	Right Door Open Switch	Close	Open
	Bit 2	Left Door Open Switch	Close	Open
	Bit 1	-	-	-
	Bit 0	-	-	-

5803 212	A3LCT1:CPU-Port9		Reading	
			0	1
	Bit 7	-	-	-
	Bit 6	-	-	-
	Bit 5	-	-	-
	Bit 4	-	-	-
	Bit 3	Dip Switch 101-1	On	Off
	Bit 2	Dip Switch 101-2	On	Off
	Bit 1	Dip Switch 101-3	On	Off
	Bit 0	Dip Switch 101-4	On	Off

5803 213	A3LCT1:eIO2-PortA		Reading	
			0	1
	Bit 7	LCT Paper Width Sensor 1: T1	Off	On
	Bit 6	LCT Paper Width Sensor 2: T1	Off	On
	Bit 5	LCT Paper Width Sensor 3: T1	Off	On
	Bit 4	LCT Paper Length Sensor 1	Off	On
	Bit 3	-	-	-
	Bit 2	-	-	-
	Bit 1	-	-	-
	Bit 0	-	-	-

5803 214	A3LCT1:eIO2-PortB		Reading	
			0	1
	Bit 7	LCT Paper Height Sensor 1: T1	Off	On
	Bit 6	LCT Paper Height Sensor 2: T1	Off	On
	Bit 5	LCT Paper Height Sensor 3: T1	Off	On
	Bit 4	LCT Paper Height Sensor 4: T1	Off	On
	Bit 3	LCT Paper End Sensor 1	Paper detected	Not detected
	Bit 2	LCT Paper Lift Sensor 1	Upper limit	Not upper limit
	Bit 1	LCT Tray Set Detection: T1	Set	Not set
	Bit 0	-	-	-

5803 215	A3LCT1:eIO2-PortC		Reading	
			0	1
	Bit 7	LCT Paper Width Sensor 1: T2	Off	On
	Bit 6	LCT Paper Width Sensor 2: T2	Off	On
	Bit 5	LCT Paper Width Sensor 3: T2	Off	On
	Bit 4	LCT Paper Length Sensor 2	Off	On
	Bit 3	-	-	-
	Bit 2	-	-	-
	Bit 1	-	-	-
	Bit 0	-	-	-

5803 216	A3LCT1:eIO2-PortD		Reading	
			0	1
	Bit 7	LCT Paper Height Sensor 1: T2	Off	On
	Bit 6	LCT Paper Height Sensor 2: T2	Off	On
	Bit 5	LCT Paper Height Sensor 3: T2	Off	On

	Bit 4	LCT Paper Height Sensor 4: T2	Off	On
	Bit 3	LCT Paper End Sensor 2	Paper detected	Not detected
	Bit 2	LCT Paper Lift Sensor 2	Upper limit	Not upper limit
	Bit 1	LCT Tray Set Detection: T2	Set	Not set
	Bit 0	-	-	-

5803 217	A3LCT1:eIO2-PortE (By-pass Unit B833)		Reading	
			0	1
	Bit 7	Paper Width Switch 1	On	Off
	Bit 6	Paper Width Switch 2	On	Off
	Bit 5	Paper Width Switch 3	On	Off
	Bit 4	Paper Width Switch 4	On	Off
	Bit 3	Paper Width Switch 5	On	Off
	Bit 2	Paper Length Sensor	On	Off
	Bit 1		-	-
	Bit 0	-	-	-

5803 218	A3LCT1:eIO2-PortP		Reading	
			0	1
	Bit 7	Air Assist fan 1: Front Error	No Error	Error
	Bit 6	Air Assist fan 1: Rear Error	No Error	Error
	Bit 5	Air Assist fan 1: Left Error	No Error	Error
	Bit 4	-	No Error	Error
	Bit 3	Air Assist fan 2: Front Error	No Error	Error
	Bit 2	Air Assist fan 2: Rear Error	No Error	Error
	Bit 1	Air Assist fan 2: Left Error	No Error	Error
	Bit 0	-	-	-

5803 219	A3LCT1:eIO3-PortA		Reading	
			0	1
	Bit 7	LCT Paper Feed Sensor 1	Paper detected	Not detected
	Bit 6	LCT Paper Feed Sensor 2	Paper detected	Not detected
	Bit 5	(Bypass) Paper Feed Sensor	Paper detected	Not detected
	Bit 4	-	-	-
	Bit 3	LCT Grip Sensor 1	Paper detected	Not detected
	Bit 2	LCT Grip Sensor 2	Paper detected	Not detected
	Bit 1	(Bypass) Relay Sensor	Paper detected	Not detected
	Bit 0	-	-	-

5803 220	A3LCT1:eIO3-PortB		Reading	
			0	1
	Bit 7	LCT Vertical Transport Sensor 1	Paper detected	No paper
	Bit 6	LCT Vertical Transport Sensor 2	Paper detected	No paper
	Bit 5	LCT Vertical Transport Sensor 3	Paper detected	No paper
	Bit 4	-	-	-
	Bit 3	LCT Exit Sensor	Paper detected	No paper
	Bit 2	-	-	-
	Bit 1	-	-	-
	Bit 0	-	-	-

5803 221	A3LCT1:eIO3-PortC		Reading	
			0	1
	Bit 7	LCT Entrance Sensor	Paper detected	No paper
	Bit 6	LCT Right Vertical Sensor	Paper detected	No paper

	Bit 5	LCT Horizontal Transport Entrance Sensor	Paper detected	No paper
	Bit 4	LCT Horizontal Transport Exit Sensor	Paper detected	No paper
	Bit 3	LCT Vertical Transport Entrance Sensor	Paper detected	No paper
	Bit 2	-	-	-
	Bit 1	LCT Horizontal Bridge Unit Set Detection	Set	Not set
	Bit 0	LCT Paper Exit Roller Contact Sensor	Contact	Not contact

Input Check: 4

Main Machine Input Check: SP5803

5803 222	A3LCT1:eIO3-PortD (By-pass Unit B833)		Reading	
			0	1
	Bit 7	Paper Near End Sensor	Off	On
	Bit 6	Paper End Sensor	Off	On
	Bit 5	Tray Lower Limit Sensor	Not low limit	Low limit
	Bit 4	Tray Lift Switch	On (Pushed)	Off
	Bit 3	Paper End Sensor (Tray)	Paper detected	No paper
	Bit 2	Lift Sensor	Upper limit	Not upper limit
	Bit 1	Bypass Set Detection	Set	Not set
	Bit 0	Bypass Slide Open Detection	Close	Open

5803 223	A3LCT1:eIO3-PortP		Reading	
			0	1
	Bit 7	Reserved Sensor 1	-	-
	Bit 6	Reserved Sensor 2	-	-
	Bit 5	Reserved Sensor 3		
	Bit 4	-	-	-
	Bit 3	Dip Switch 740-1	On	Off
	Bit 2	Dip Switch 740-2	On	Off
	Bit 1	Dip Switch 740-3	On	Off
	Bit 0	Dip Switch 740-4	On	Off

5803 231	A3LCT2:CPU-Port7	Same as SP5803-211

5803 232	A3LCT2:CPU-Port9	Same as SP5803-212
5803 233	A3LCT2:eIO2-PortA	Same as SP5803-213
5803 234	A3LCT2:eIO2-PortB	Same as SP5803-214
5803 235	A3LCT2:eIO2-PortC	Same as SP5803-215
5803 236	A3LCT2:eIO2-PortD	Same as SP5803-216
5803 237	A3LCT2:eIO2-PortE	Same as SP5803-217
5803 238	A3LCT2:eIO2-PortP	Same as SP5803-218
5803 239	A3LCT2:eIO3-PortA	Same as SP5803-219
5803 240	A3LCT2:eIO3-PortB	Same as SP5803-220
5803 241	A3LCT2:eIO3-PortC	Same as SP5803-221
5803 242	A3LCT2:eIO3-PortD	Same as SP5803-222
5803 243	A3LCT2:eIO3-PortP	Same as SP5803-223

ADF Input Check: SP6007 (D095 only)

6007	ADF Input Check (D095 only)	Reading	
		0	1
001	Original Set Sensor	No original	Original detected
002	Original Width Sensor 1	No original	Original detected
003	Original Width Sensor 2	No original	Original detected
004	Original Width Sensor 3	No original	Original detected
005	Entrance Sensor	No original	Original detected
006	Registration Sensor	No original	Original detected
007	Exit Sensor	No original	Original detected
008	Inverter Sensor	No original	Original detected
009	DF Position Sensor	Down	Up

010	APS Start Sensor	Start	Off
011	Feed Cover Sensor	Close	Open
012	Exit Cover Sensor	Close	Open
013	Bottom Plate HP Sensor	At home position	Not home position
014	Bottom Plate Position Sensor	Detected	Not detected
015	Pick-up Roller HP Sensor	Home position	Not home position
016	Feed-in Motor Encoder Pulse	Change the "0" and "1" during rotation	
017	Transport Motor Encoder Pulse	Change the "0" and "1" during rotation	
018	Feed-out Motor Encoder Pulse	Change the "0" and "1" during rotation	
019	Original Length Sensor	No original	Original detected

Finisher Input Check: SP6112 (B830)

No.	Description	No.	Description
001	Entrance Sensor	026	Exit Guide Open Sensor
002	Upper Exit Tray Sensor	027	Stapler Rotation Sensor 2
003	Shift Tray Exit Sensor 1	028	Staple Ready Sensor
004	Stapler Tray Exit Sensor	029	Stack Plate HP Sensor (Front)
005	Shift Tray Lower Limit Sensor	030	Stack Plate HP Sensor (Back)
006	Shift Tray Near Full Sensor	031	Positioning Roller HP Sensor
007	Feed-Out Belt HP Sensor	032	Return Drive HP Sensor
008	Jogger HP Sensor	033	Stapling Paper Height Sensor
009	Shift Tray Half-Turn Sensor 1	034	Shift Lower Limit Sensor (Large Paper)
010	Stapler HP Sensor (Front/Rear)	035	Punch HP Sensor 2
011	Stapler HP Sensor	036	Shift Jogger Sensor
012	Staple Out Sensor	037	Shift Jogger HP Sensor

013	Staple Tray Paper Sensor	038	Shift Jogger Retraction HP Sensor
014	Front Door Open Switch	039	Emergency Stop Switch
015	Punch Detection Sensor	040	Top Fence HP Sensor
016	Punch HP Sensor 1	041	Bottom Fence HP Sensor
017	Punch-out Hopper Full Sensor	042	Shift Tray Full Sensor (Z-Folded Paper)
018	Stapling Paper Height Sensor	043	Shift Tray Exit Sensor 2
019	Staple Mode HP Sensor	044	Upper Tray Junction Gate HP Sensor
020	Jam Detection Sensor	045	Staple Junction Gate HP Sensor
021	Upper Tray Full Sensor	046	Pre-Stack Junction Gate HP Sensor
022	Stapler Rotation Sensor 1	047	Pre-Stack Sensor (Right)
023	Stapler Trimmings Hopper Full Sensor	048	Pre-Stack Junction Gate Release HP Sensor
024	Pre-Stack Sensor	049	Shift Tray Half-Turn Sensor 2
025	Stack Plate HP Sensor (Center)	050	Staple Trimmings Hopper Set Sensor

Booklet Finisher Input Check (D434): SP6218

6218	Booklet Finisher Input Check (D434)
	Displays the signals received from sensors and switches of the booklet finisher.
001	Finisher Entrance Sensor
002	Pre-Stack Paper Sensor
003	Pre-Stack Roller HP Sensor
004	Proof Tray JG HP Sensor
005	Stack JG HP Sensor
006	Proof Tray Exit Sensor
007	Proof Tray Full Sensor
008	Punch Vertical Registration Sensor

009	Punch Side-to-Side Registration Sensor
010	Punch Blade HP Sensor
011	Punch Unit HP Sensor
012	Punch Switch
013	Punch Hopper Full Sensor
014	Punch Set Sensor
015	Stack Plate HP Sensor: Front
016	Stack Plate HP Sensor: Center
017	Stack Plate HP Sensor: Rear
018	Corner Stapler HP Sensor
019	Stapler Rotation HP Sensor: Front
020	Stapler Rotation HP Sensor: Rear
021	Bottom Fence HP Sensor
022	Jogger Fence HP Sensor: Front
023	Jogger Fence HP Sensor: Rear
024	Positioning Roller HP Sensor
025	Top Fence HP Sensor
026	Stack Feed-Out Belt HP Sensor
027	Stapling Tray Paper Sensor
028	Corner Stapler HP Sensor
029	Staple End Sensor
030	Self-Limit Sensor
031	Staple Trimmings Hopper Set Sensor
032	Staple Trimmings Hopper Full Sensor
033	Stapling Tray Entrance Sensor
034	Stack Transport Unit HP Sensor

035	Stack JG HP Sensor
036	Booklet Top Fence HP Sensor
037	Booklet Stapler Clamp Roller HP Sensor
038	Fold Plate Cam HP Sensor
039	Fold Plate HP Sensor
040	Booklet Stapler Side Fence HP Sensor (Front)
041	Booklet Stapler Side Fence HP Sensor (Rear)
042	Booklet Stapler Bottom Fence HP Sensorr
043	Fold Unit Entrance Sensor
044	Booklet Stapler Entrance Sensor
045	Fold Unit Entrance Sensor
046	Booklet Stapler Staple End Sensor: Front
047	Booklet Stapler Staple End Sensor: Rear
048	Booklet Tray Full Sensor: Upper
049	Booklet Tray Full Sensor: Lower
050	Shift Tray Exit Sensor: Long
051	Shift Tray Exit Sensor: Short
052	Exit Guide HP Sensor
053	Drag Roller HP Sensor
054	Shift Tray Upper Limit Switch
055	Shift Tray HP Sensor: Front
056	Shift Tray HP Sensor: Rear
057	Paper Height Sensor: Staple
058	Paper Height Sensor: Shift
059	Paper Height Sensor: Z-Fold
060	Paper Height Sensor: TE

061	Shift Tray Full Sensor: 2500
062	Shift Tray Full Sensor: 1500
063	Shift Tray Full Sensor: 1000
064	Shift Tray Full Sensor: 500
065	Shift Tray Emergency Stop Switch
066	Shift Tray Jogger HP Sensor
067	Shift Jogger Fence Retract HP Sensor
068	Shift Tray Jogger HP Sensor
069	Front Door Switch
070	Punch Type 1
071	Punch Type 2
072	Staple Tray Set Sensor
073	Sub Board Set Sensor
074	Reserved

Cover Interposer Input Check (B835): SP6400

No.	Description
001	1st Paper Feed Sensor
002	2nd Paper Feed Sensor
003	1st Transport Roller
004	2nd Transport Roller
005	1st Vertical Transport Sensor
006	2nd Vertical Transport Sensor
007	Output Sensor
008	Entrance Sensor

009	Exit Sensor
010	1st Pick-up Roller HP Sensor
011	2nd Pick-up Roller HP Sensor
012	1st Upper Limit Sensor
013	2nd Upper Limit Sensor
014	1st Lower Limit Sensor
015	2nd Lower Limit Sensor
016	1st Paper Near End Sensor
017	2nd Paper Near End Sensor
018	1st Paper End Sensor
019	2nd Paper End Sensor
020	1st Paper Length Sensor
021	2nd Paper Length Sensor
022	1st Paper Width Sensor 1
023	1st Paper Width Sensor 2
024	1st Paper Width Sensor 3
025	1st Paper Width Sensor 4
026	1st Paper Width Sensor 5
027	2nd Paper Width Sensor 1
028	2nd Paper Width Sensor 2
029	2nd Paper Width Sensor 3
030	2nd Paper Width Sensor 4
031	2nd Paper Width Sensor 5
032	1st Feed Cover Sensor
033	2nd Feed Cover Sensor
034	Cover Vertical Transport Switch

035	Front Door Open Switch

Ring Binder Input Check (D392): SP6508

6508	Input Check: Ring Binder	Ring Binder D392
001	Entrance Sensor	
002	Transport Sensor	
003	Exit Sensor	
004	Punch Reference Sensor	
005	Binder Delivery Base Sensor	
006	Path JG HP Sensor	
007	Paper Jog HP Sensor	
008	Jog Roller Lift HP Sensor	
009	Punch HP Sensor	
010	Punch Encoder Sensor	
011	Unit Detect Sensor	
012	Punch Size A4/LT Sensor	
013	Punch Type Sensor	
014	Full Sensor	
015	Chad Box Sensor	
016	Output Belt 1 HP Sensor	
017	Output Belt 2 HP Sensor	
018	Output Belt Rotation HP Sensor	
019	Output Unit Entrance Sensor	
020	Booklet Pass Sensor	
021	Stack HP Sensor	

022	Stack Height Sensor 1
023	Stack Height Sensor 2
024	Stacker Paper Detect Sensor
025	Tray Detect Sensor
026	Obstacle Detect Sensor
027	Book Position Sensor
028	Binder Unit Sensor
029	Width Align HP Sensor 1
030	Paddle Roller HP Sensor
031	Clamp HP Sensor
032	Alignment Pin HP Sensor
033	Shutter HP Sensor
034	50-Sheet Detect Sensor
035	Paper Thickness Sensor
037	Paper LE Detect Sensor
038	Alignment Pin Top Edge Sensor
039	Width Align HP Sensor 2
040	De-curler Motor HP Sensor
041	Shutter Motor HP Sensor
042	Roller Lift Motor HP Sensor
043	Binder HP Sensor
044	Bind Timing Sensor
045	Ring Replace HP Sensor
046	Ring Replace Timing Sensor
047	Ring Supply Detect Sensor
048	Cartridge Reversed Sensor

049	Ring Near-End Sensor
050	Ring 50/100 Sensor
051	Ring A4/LT Sensor

Perfect Binder Input Check (D391): SP6526

6526	Input Check: Perfect Binder	Perfect Binder (D391)
001	Entrance sensor	
002	Timing Sensor	
003	Jog Sensor HP: Front	
004	Jog Sensor HP: Rear	
005	Jog Sensor HP: Front Large	
006	Jog Sensor HP: Rear Large	
007	Cover Path: Sensor 1	
008	Cover Path: Sensor 2	
009	Signature Path: Sensor 1	
010	Signature Path: Sensor 2	
011	Inserter Communication Sensor: Before Joining	
012	Switchback Flapper HP Sensor	
013	Switchback Roller HP Sensor	
014	Cover Registration Sensor	
015	Straight-Through Exit Sensor	
016	TE Press Lever HP Sensor	
017	Stack Overflow Sensor	
018	Tray Lower Limit Sensor	
019	Paper Detect Sensor: Front	

020	Paper Detect Sensor: Rear
021	Cover Guide HP Sensor: Right
022	Cover Guide HP Sensor: Left
023	Cover Guide Open Sensor: Right
024	Cover Guide Open Sensor: Left
025	Stack Weight Move HP Sensor
026	Stack Tray HP Sensor
027	Front Door SW
028	Top Cover Sensor
029	Top Cover Switch
030	Glue Tank Cover Sensor
031	Temperature Start Switch
032	Inserter Connect Signal
033	Glue Tank Empty Sensor
034	Glue Tank Full Sensor
035	24 V Guard 1
036	24 V Guard 2
037	Stack Tray Empty Sensor
038	Front Door Lock Sensor
039	Power Supply Fan Lock: Left
040	Sub Grip Upper HP Sensor
041	Signature Exit Sensor
042	Size Move HP Sensor
043	Registration Unit HP Sensor
044	Post Main Grip Encoder Sensor
045	24V 2 Check Signal

046	Spine Fold Press Sensor: Right
047	Main Grip HP Sensor: Left
048	Cover Horizontal Registration Sensor: Small
049	Cover Horizontal Registration Sensor: Large
050	Glue Tank HP Sensor
051	Main Grip HP Sensor
052	Main Grip Front Encoder Sensor
053	24V 3 Check Signal
054	Main Grip Press Sensor: Left
055	Main Grip Press Sensor: Small
056	Sub Grip Paper Sensor
057	Sub Grip Open Sensor
058	Sub Grip Close Sensor
059	Spine Fold Close Sensor: Left
060	Spine Plate Open Sensor
061	Spine Plate Closed Sensor
062	Spine Fold HP Sensor: Left
063	Spine Fold HP Sensor: Right
064	Cutter LE Detect Sensor
065	Main Grip Rotate Enable Sensor
066	Main Grip Rotate Bind Position Sensor
067	Main Grip Rotate HP Sensor
068	Rear Main Grip Open Sensor
069	Rear Main Grip Close Sensor
070	Front Main Grip Open Sensor
071	Front Main Grip Close Sensor

072	Main Grip Signature Sensor
073	Thermostat Abnormal
074	Glue Heater Thermistor
075	Glue Unit HP Sensor
076	Book Output Path HP Sensor
077	Book Output Path Push Sensor
078	Sub Grip HP Sensor
079	Signature Main Grip Position Sensor
080	Signature Fan 2 Lock: Rear
081	Signature Fan 2 Lock: Front
082	Signature Fan 1 Lock: Rear
083	Signature Fan 1 Lock: Front
084	Power Supply Fan Lock: Center
085	Power Supply Fan Lock: Rear
086	Spine Plate Fan Lock: Upper Rear
087	Spine Plate Fan Lock: Front
088	Spine Plate Fan Lock: Lower Rear
089	Spine Plate Fan Lock: Lower Front
090	Glue Tank Roller: Rotate Detect Sensor
091	Glue Tank HP Sensor: Front
092	Glue Supply Fan: Lock 1
093	Glue Supply Fan Lock 2
094	Book Catch Fence HP Sensor
095	Output Stack Door Sensor
096	Output Stack Door Switch
097	Book Buffer Tray HP Sensor

098	Trim Scrap Buffer HP Sensor: Right
099	Press HP Sensor
100	Blade Cradle HP Sensor
101	Cutter Limit Sensor
102	Cutter Area Sensor 1
103	Entrance Path Sensor
104	Book Registration Sensor
105	Cutter Area Sensor 2
106	LE Detect Sensor
107	Grip End Sensor
108	Book Rotate HP Sensor 1: Right
109	Press End Sensor
110	Slide HP Sensor
111	Grip HP Sensor
112	Book Rotate HP Sensor 2: Left
113	Press Limit Sensor
114	Trim Scrap Box Sensor
115	Book Arrival Sensor
116	Book Detect Sensor: Output Tray
117	Output Tray HP Sensor
118	Trim Scrap Buffer HP Sensor
119	Trim Scrap Box Full Sensor
120	Front Door SW: Center
121	Front Door SW: 36V
122	Thrust Plate Sensor
123	Upper Tray Empty Sensor

124	Lower Tray Empty Sensor
125	Upper Tray Pickup Sensor
126	Lower Tray Pickup Sensor
127	Inserter Cover Sensor
128	Lower Tray Paper Out Sensor
129	Lower Tray Registration Sensor
130	Upper Tray Registration Sensor
131	Upper Tray: Large Paper Sensor
132	Upper Tray: Small Paper Sensor
133	Lower Tray Lower Limit Sensor
134	Transport Sensor: Midway
135	Inserter Unit Sensor
136	Upper Tray Lower Limit Sensor
137	Drive Gear Switching Sensor
138	Transport Sensor 1
139	Transport Sensor 2
140	Relay Unit Transport Sensor
141	Relay Unit Front Door Sensor

High Capacity Stacker Input Check (D447): SP6600/SP6606

6600	Input Check: Stacker 1	High Capacity Stacker (D447)
6606	Input Check: Stacker 2	
001	Entrance Sensor	
002	Shift Tray Exit Sensor	
003	Proof Tray Exit Sensor	

004	Exit Sensor
005	Transport Sensor
006	Proof Tray Full Sensor
007	Shift Tray JG HP Sensor
008	Proof Tray JG HP Sensor
009	Shift Tray Roller HP Sensor
010	Front Jogger Fence HP Sensor
011	Rear Jogger Fence HP Sensor
012	Jogger Fence Retraction HP Sensor
013	LE Stopper HP Sensor
014	Paper Height Sensor
015	Shift Tray Paper Sensor
016	Tray Full Sensor 1: 25%
017	Tray Full Sensor 2: 50%
018	Tray Full Sensor 3: 75%
019	Tray Full Sensor 4: 100%
020	Tray Low Limit Sensor
021	Roll Away Cart Set SW
022	Tray Guard Sensor 1
023	Tray Guard Sensor 2
024	Sub Jogger HP Sensor
025	Down Button
026	Jam Button
027	Top DoorSW
028	Front Door SW

Trimmer Unit Input Check (D455): SP6650

6650	Input Check: Trimmer (D455)
001	Entrance Sensor
002	Stopper Sensor
003	Exit Sensor
004	Booklet Sensor 1
005	Booklet Sensor 2
006	Booklet Sensor 3
007	Trimming Blade HP Sensor
008	Cut Position HP Sensor
009	Press Roller HP Sensor
010	Press Stopper HP Sensor
011	Scrap Hopper Full HP Sensor
012	Scrap Hopper HP Sensor
013	Door Switch

Output Check

Main Machine Output Check: SP5804

Note

- Motors keep turning in this mode regardless of upper or lower limit sensor signals. To prevent mechanical or electrical damage, do not keep an electrical component on for a long time.

Main Machine Output Check (SP5-804)

1. Open SP mode 5-804.
2. Select the SP number that corresponds to the component you wish to check. (Refer to the table on the next page.)
3. Press "On" then press "Off" to test the selected item.

No.	Description
001	Switchback Gate Solenoid
002	Exit Gate Solenoid
003	Inverter Roller Solenoid
004	Regist Entrance Solenoid
005	LCT Entrance Solenoid
006	ID/MUSIC Sensor Shutter Sol
007	Tandem Tray Connect Solenoid
008	Left Tray Lock Solenoid
009	Separation Roller 1 Solenoid
010	Separation Roller 2 Solenoid
011	Pick-up Roller 1 Solenoid
012	Pick-up Roller 2 Solenoid
013	Front Side Fence Solenoid
014	Rear Side Fence Solenoid

015	Tray 1 Lift Motor
016	Tray 2 Lift Motor
017	PTB Cooling Fan
018	Fusing Fan 4
019	PSU Fan 4-5
020	Fusing Fan 1-3
021	Controller Fan 3-4
022	Fusing Fan 4:Half Speed
023	YM-CK Laser Unit Fan:Half Speed
024	PSU Fan 1-3:Half Speed
025	PSU Fan 4-5:Half Speed
026	Fusing Ex Fan 1-3:Half Speed
027	Controller Fan 1-2:Half Speed
028	Controller Fan 3-4:Half Speed
029	ITB Fan:Half Speed
030	Toner Pump Clutch Y
031	Toner Pump Clutch M
032	Toner Pump Clutch C
033	Toner Pump Clutch K
034	Toner Supply Clutch Y
035	Toner Supply Clutch M
036	Toner Supply Clutch C
037	Toner Supply Clutch K
038	Toner Bottle Motor Y
039	Toner Bottle Motor M
040	Toner Bottle Motor C

041	Toner Bottle Motor K
042	Oil Pump
044	PTB Fan 1-2
045	Fusing Fan 5-6
046	Fusing Fan 1-3
047	YM-CK Laser Unit Fan
048	Paper Cooling Fan 1-2
049	PSU Fan 1-3
050	Controller Fan 1-2
051	Ozone Fan Y
052	Ozone Fan M
053	Ozone Fan C
054	Ozone Fan K
055	Development Fan Y
056	Development Fan M
057	Development Fan C
058	Development Fan K
059	CIS Fan
060	ITB Fan
061	Paper Cooling Fan 3
062	Fusing Fan 5-6:Half Speed
063	Fusing Fan 1-3:Half Speed
068	Registration Fan
069	Paper Exit Fan
070	Black PCDU Fan
071	Mechanical Counter 1

072	Mechanical Counter 2
073	Fusing Lamp 1:Htg Roller
074	Fusing Lamp 2:Htg Roller
076	LCT Tray Heater
077	Fusing Lamp 3:Htg Roller
078	Fusing Lamp 4:Prs Roller
081	Erase Lamp Y
082	Erase Lamp M
083	Erase Lamp C
084	Erase Lamp K
093	Y Bias:HV
094	M Bias:HV
095	C Bias:HV
096	K Bias:HV
097	Separation:HV DC
098	Separation:HV AC
100	BTL Adjust Motor Y
101	BTL Adjust Motor M
102	BTL Adjust Motor C
103	BTL Adjust Motor K
104	Duplex Transport Motor 1
105	Switchback Motor
106	Inverter Motor
107	Oil Supply Motor
108	Pressure Roller Lift Motor
109	De-curler Feed Motor

111	PTB Motor
112	PTR Lift Motor
113	Duplex Transport Motor 2
114	Charge Unit Cleaning Motor Y
115	Charge Unit Cleaning Motor M
116	Charge Unit Cleaning Motor C
117	Charge Unit Cleaning Motor K
118	Shift Roller Unit Motor
119	Registration Gate Motor
120	Registration Entrance Motor
121	Registration Timing Motor
122	Shift Roller Motor
123	PTR Timing Motor
124	1st Paper Feed Motor
125	2nd Paper Feed Motor
126	1st Grip Motor
127	3rd Grip Motor
128	2nd Grip Motor
129	Belt Centering Roller Motor
130	ITB Color Lift Motor
131	ITB Black Lift Motor
132	Drum Motor Y
133	Drum Motor M
134	Drum Motor C
135	Drum Motor K
136	ITB Motor

142	RFID ON/OFF:Y
143	RFID ON/OFF:M
144	RFID ON/OFF:C
145	RFID ON/OFF:K
146	RFID ON:Y
147	RFID ON:M
148	RFID ON:C
149	RFID ON:K
150	Fusing Motor
151	Paper Exit Motor
152	Waste Toner Transport Motor 1
153	Waste Toner Transport Motor 2
158	Drum Cleaning Motor Y
159	Drum Cleaning Motor M
160	Drum Cleaning Motor C
161	Drum Cleaning Motor K
162	Development Motor Y
163	Development Motor M
164	Development Motor C
165	Development Motor K
166	PTR Motor
168	Toner Supply Motor
169	ITB Cleaning Motor
170	Feed Motor 1 (Drive Motor Right in Buffer Pass Unit (M379))

171	Feed Motor 2 (Drive Motor Left in Buffer Pass Unit (M379))
172	Cool Fan Drv 1 (Upper Cooling Fan in Buffer Pass Unit (M379))
173	Exhaust Fan Drv 1 (Upper Exhaust Fan in Buffer Pass Unit (M379))
174	Cool Fan Drv 2 (Lower Cooling Fan in Buffer Pass Unit (M379))
175	Exhaust Fan Drv 2 (Lower Exhaust Fan in Buffer Pass Unit (M379))
From -190 to -199 only for M077	
190	A4LCT Upper Feed Motor
191	A4LCT Middle Feed Motor
192	A4LCT Lower Feed Motor
193	A4LCT Upper Transport Motor
194	A4LCT Middle Transport Motor
195	A4LCT Lower Transport Motor
196	A4LCT Upper Relay Motor
197	A4LCT Middle Relay Motor
198	A4LCT Lower Relay Motor
199	A4LCT Exit Motor
-	
200	Web Motor
From -202 to -206 only for D095	
202	Scanner lamp1 (Exposure Lamp 1)
203	Scanner lamp2 (Exposure Lamp 2)

204	Scanner fanmotor A (Lamp Regulator Fan: Left and Right)
205	Scanner fanmotor B (Scanner Motor Cooling Fan)
206	Scanner fanmotor C (Scanner Intake and Exhaust Fan)
From -210 to -215 only for M077	
210	A4LCT Upper Pick-up SOL
211	A4LCT Middle Pick-up SOL
212	A4LCT Lower Pick-up SOL
213	A4LCT Upper Separation Roller SOL
214	A4LCT Middle Separation Roller SOL
215	A4LCT Lower Separation Roller SOL
-	
216	A3 LCT1:Paper Feed Motor 1
217	A3 LCT1:Paper Feed Motor 2
218	A3 LCT1:Grip Motor 1
219	A3 LCT1:Grip Motor 2
220	A3 LCT1:V-Transport Motor 1
221	A3 LCT1:V-Transport Motor 2
222	A3 LCT1:Exit Motor
223	A3 LCT1:Horizontal Relay Motor
224	A3 LCT1:Entrance Motor
225	A3 LCT1:Exit Roller Contact Motor
226	A3 LCT1:Pick-up Solenoid 1
227	A3 LCT1:Pick-up Solenoid 2

228	A3 LCT1:Air Assist Front Fan 1
229	A3 LCT1:Air Assist Rear Fan 1
230	A3 LCT1:Air Assist Front Fan 2
231	A3 LCT1:Air Assist Rear Fan 2
232	By-pass Feed Motor
233	By-pass Transport Motor
234	By-pass V-Transport Motor
235	By-pass Pick-up Solenoid
236	A3 LCT2:Paper Feed Motor 1
237	A3 LCT2:Paper Feed Motor 2
238	A3 LCT2:Grip Motor 1
239	A3 LCT2:Grip Motor 2
240	A3 LCT2:V-Transport Motor 1
241	A3 LCT2:V-Transport Motor 2
242	A3 LCT2:Exit Motor
243	A3 LCT2:Horizontal Relay Motor
244	A3 LCT2:Entrance Motor
245	A3 LCT2:Exit Roller Contact Motor
246	A3 LCT2:Pick-up Solenoid 1
247	A3 LCT2:Pick-up Solenoid 2
248	A3 LCT2:Air Assist Front Fan 1
249	A3 LCT2:Air Assist Rear Fan 1
250	A3 LCT2:Air Assist Front Fan 2
251	A3 LCT2:Air Assist Rear Fan 2

ADF Output Check: SP6008 (D095 only)

No.	Description
001	Feed-in Motor(Fast)
002	Feed-in Motor(Slow)
003	Transport Motor (Forward)
004	Transport Motor (Reverse)
005	Feed-out Motor
006	Exit Gate SOL
007	Inverter Gate SOL
008	Check LEDs
009	Pick-up Motor
010	Bottom Plate Motor
011	Paper Feed Clutch

Finisher Output Check SP6113 (B830)

No.	Description
001	OFF (Stop)
002	Upper Transport Motor
003	Shift Tray Exit Motor
004	Upper Tray Junction Gate Motor
005	Shift Tray Lift Motor
006	Jogger Motor
007	Shift Jogger Motor
008	Staple Hammer Motor
009	Punch Motor

010	Staple Junction Gate Motor
011	Positioning Roller Motor
012	Stack Feed-Out Belt Motor
013	Shift Motor
014	Stapler Rotation Motor
015	Staple Tray Exit Motor
016	Exit Guide Motor
017	Stack Plate Motor (Center)
018	Pre-Stack Junction Gate Motor
019	Pre-Stack Junction Gate Release Motor
020	Stack Plate Motor (Front)
021	Stack Plate Motor (Rear)
022	Stacking Roller Motor
023	Stacking Roller Drag Motor
024	Shift Jogger Motor
025	Shift Jogger Lift Motor
026	Jogger Top Fence Motor
027	Jogger Bottom Fence Motor
028	Lower Transport Motor
029	Upper Tray Exit Motor
030	Positioning Transport Motor
031	Pre-Stack Transport Motor
032	Staple Trimming Shooter Solenoid

Booklet Finisher Output Check: SP6219 (D434)

6219	Finisher Output Check (D434)	
001	Entrance Motor	
002	Registration Motor	
003	Proof Tray Vertical Transport Motor	
004	Pre-stack Release Motor	
005	Pre-stack Motor	
006	Shift JG Motor	
007	Stapler JG Motor	
008	Proof Tray Exit Motor	
009	Horizontal Transport Motor	
010	Punch Movement Motor	
011	Punch Switch Motor	
012	Punch Drive Motor	
013	Stapling Tray Entrance Motor	
014	Stack Plate Motor: Front	
015	Stack Plate Motor: Center	
016	Stack Plate Motor: Rear	
017	Punch S-to-S Registration: CIS Lamp	
018	Stapler Rotation Motor	
019	Stapler Movement Motor	
020	Bottom Fence Lift Motor	
021	Front Jogger Fence Motor	
022	Rear Jogger Fence Motor	
023	Positioning Roller Rotation Motor	

024	Positioning Roller Motor	
025	Stack Feed-out Belt Motor	
026	Top Fence Motor	
027	Shutter Solenoid	
028	Booklet Stapler Motor	
029	Stack Transport Motor	
030	Stack JG Motor	
031	Stack Transport Motor	
032	Reserved	
033	Booklet Stapler Clamp Roller Motor	
034	Booklet Stapler Bottom Fence Motor	
035	Booklet Stapler Side Fence Motor	
036	Booklet Stapler Top Fence Motor	
037	Booklet Stapler Motor	
038	Fold Roller Motor	
039	Fold Plate Motor	
040	Shift Tray Exit Motor	
041	Shift Motor	
042	Drag Drive Motor	
043	Drag Roller Motor	
044	Exit Guide Motor	
045	Shift Tray Lift Motor	
046	Shift Tray Jogger Fence Motor	
047	Shift Tray Jogger Fence Retraction Motor	

Cover Interposer (B835) Output Check: SP6401

No.	Description
001	OFF (Stop)
002	1st Pick-up Motor
003	2nd Pick-up Motor
004	1st Paper Feed Motor
005	2nd Paper Feed Motor
006	1st Transport Motor
007	2nd Transport Motor
008	Vertical Transport Motor
009	Horizontal Transport Motor

Ring Binder (D392) Output Check: SP6509

6509	Output Check: Ring Binder	Ring Binder D392
001	Entrance Motor	
002	Transport Motor	
003	Exit Motor	
004	Path JG Motor	
005	Jog Roller Motor	
006	Side Jogger Motor	
007	After-Punch Output Motor	
008	Jog Roller Lift Motor	
009	Hole Clear Motor	
010	Top Fence SOL	
011	Output Belt 1 Motor	

012	Output Belt 2 Motor
013	Output Belt Rotation Motor
014	Stacker Motor
015	De-curler Motor
016	Shutter Motor
017	Paddle Roller Motor
018	Alignment Pin Motor
019	Paddle Roller Lift Motor
020	Width Align Motor 1
021	Clamp Motor
022	Width Align Motor 2
023	Roller Motor
024	Roller Lift Motor
025	Main Lift Motor
026	50/100 Adjustment Motor

High Capacity Stacker Output Check (D447): SP6601/SP6607

6601	Output Check: Stacker 1	High Capacity Stacker (D447)
6607	Output Check: Stacker 2	
001	Stop	
002	Entrance Motor	
003	Proof Tray Exit Motor	
004	Shift Exit Motor	
005	Transport Motor	
006	Shift JG Motor	

007	Proof Tray JG Motor
008	Shift Motor
009	Front Jogger Fence Motor
010	Rear Jogger Fence Motor
011	Jogger Fence Retraction Motor
013	LE Stopper Motor
014	Sub Jogger Motor
015	Tray Lift Motor
016	Front Door Lock SOL
017	Fan Motor
018	Tray Full LED
019	Jog In Progress LED
020	Tray Lift LED
021	Error LED

Trimmer Unit Output Check (D455): SP6651

6651	Output Check: Trimmer (D455)
001	Entrance Motor
002	Exit Motor
003	Press Roller Motor
004	Cut Position Motor
005	Press Stopper Motor
006	Tray Motor
007	Trimming Blade Motor

Printer and Scanner SP Tables

Printer SP

There are no printer SPs in this model.

Scanner SP (D095 only)

1001	[Scan Nv Version]		
1001 5		*CTL	Displays the NV version of the scanner.

1004	[Compression Type]		
	Selects the compression type for binary picture processing.		
1004 1	Compression Type	*CTL	[1 to 3 / **1** / 1/step] 1: MH, 2: MR, 3: MMR

1005	[Erase margin]		
	Creates an erase margin for all edges of the scanned image. If the machine has scanned the edge of the original, create a margin. This SP is activated only when the machine uses TWAIN scanning.		
1005 1	Range from 0 to 5 mm	*CTL	[0 to 5 / **0** / 1 mm/step]