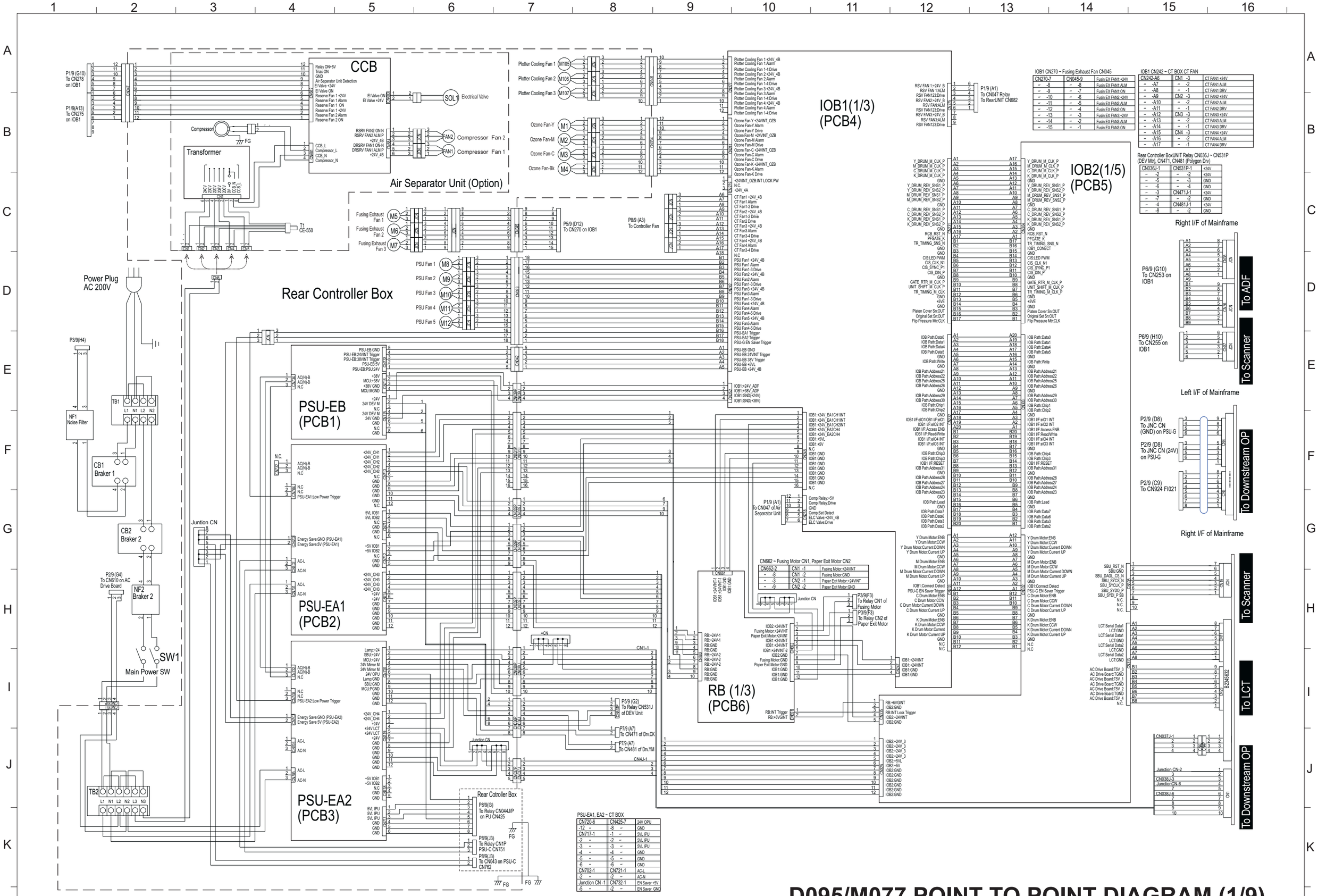

CN720-6	CN425-7	24V OPU
-12	-8 〃	GND
CN717-1	-1 〃	5VL IPU
-2 〃	-2 〃	5VL IPU
-3 〃	-3 〃	5VL IPU
-4 〃	-4 〃	GND
-5 〃	-5 〃	GND
-6 〃	-6 〃	GND
CN702-1	CN721-1	AC-L
-2 〃	-2 〃	AC-N
Junction CN -1	CN732-1	EN Saver +5V
-5 〃	-2 〃	EN Saver GND

PSU-EA1, EA2 ~ CT BOX

CN702-7	CN045-9	Fusin EX FAN1:+24V
〃 -8	〃 -8	Fusin EX FAN1:ALM
〃 -9	〃 -7	Fusin EX FAN1:ON
〃 -10	〃 -6	Fusin EX FAN2:+24V
〃 -11	〃 -5	Fusin EX FAN2:ALM
〃 -12	〃 -4	Fusin EX FAN2:ON
〃 -13	〃 -3	Fusin EX FAN3:+24V
〃 -14	〃 -2	Fusin EX FAN3:ALM
〃 -15	〃 -1	Fusin EX FAN3:ON

IOB1 CN270 ~ Fusing Exhaust Fan CN045

CN242-A6	CN1 -3	CT FAN1 +24V
〃 -A7	〃 -2	CT FAN1 ALM
〃 -A8	〃 -1	CT FAN1 DRV
〃 -A9	CN2 -3	CT FAN2 +24V
〃 -A10	〃 -2	CT FAN2 ALM
〃 -A11	〃 -1	CT FAN2 DRV
〃 -A12	CN3 -3	CT FAN3 +24V
〃 -A13	〃 -2	CT FAN3 ALM
〃 -A14	〃 -1	CT FAN3 DRV
〃 -A15	CN4 -3	CT FAN4 +24V
〃 -A16	〃 -2	CT FAN4 ALM
〃 -A17	〃 -1	CT FAN4 DRV

IOB1 CN242 ~ CT BOX CT FAN

CN036J-1	CN531P-1	+24V
〃 -2	〃 -2	+24V
〃 -5	〃 -3	GND
〃 -6	〃 -4	GND
〃 -3	CN471J-1	+24V
〃 -7	〃 -2	GND
〃 -4	CN481J-1	+24V
〃 -8	〃 -2	GND

Rear Controller BoxUNIT Relay CN036J ~ CN531P (DEV Mtr), CN471, CN481 (Polygon Drv)

CN662-2	CN1 -1	Fusing Motor:+24VINT
〃 -8	CN1 -2	Fusing Motor:GND
〃 -3	CN2 -1	Paper Exit Motor:+24VINT
〃 -9	CN2 -2	Paper Exit Motor:GND

CN662 ~ Fusing Motor CN1, Paper Exit Motor CN2

D095/M077 POINT TO POINT DIAGRAM (1/9)

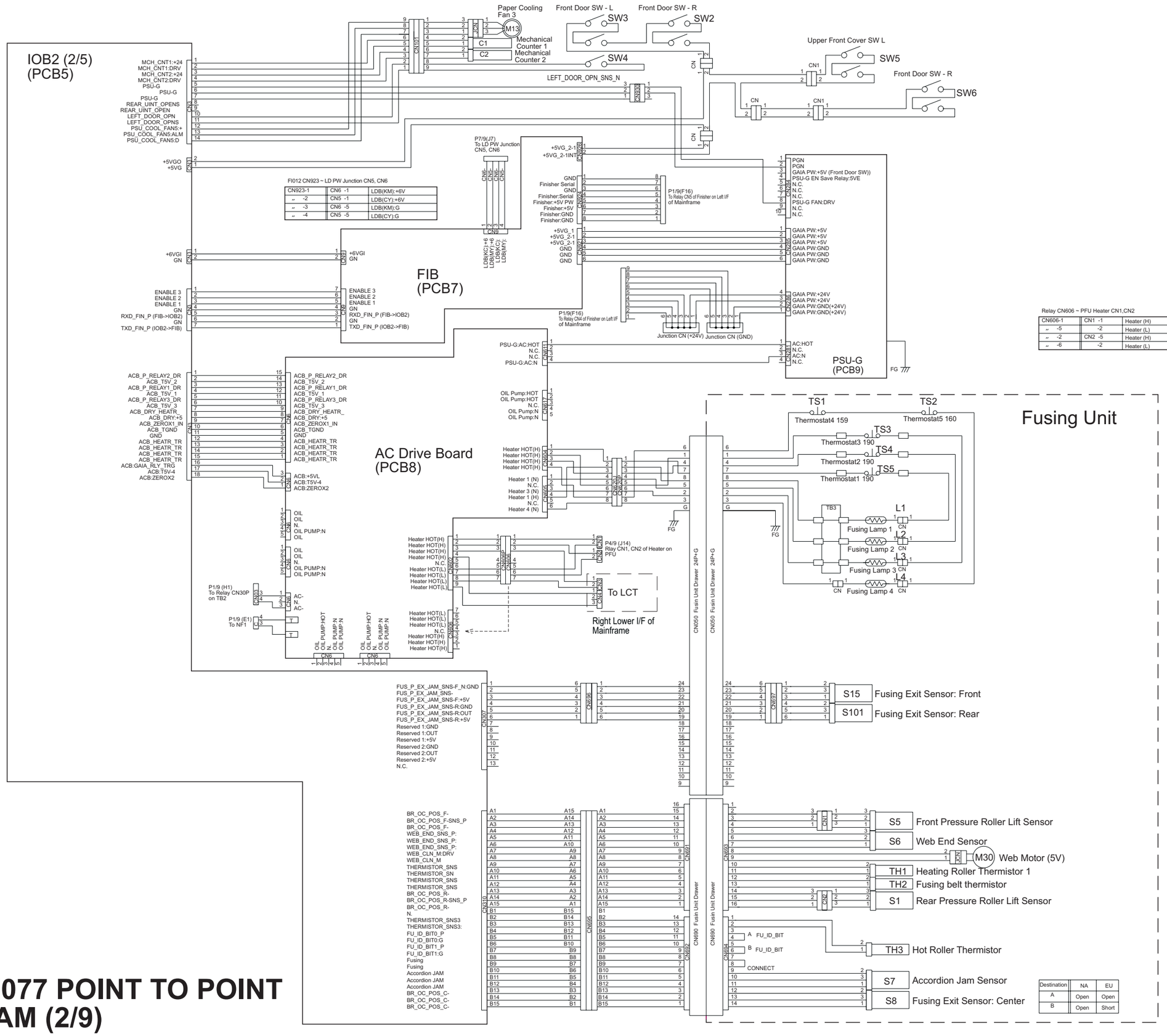

CN923-1	CN6 -1	LDB(KM):+6V
〃 -2	CN5 -1	LDB(CY):+6V
〃 -3	CN6 -5	LDB(KM):G
〃 -4	CN5 -5	LDB(CY):G

FI012 CN923 ~ LD PW Junction CN5, CN6

CN606-1	CN1 -1	Heater (H)
〃 -5	-2	Heater (L)
〃 -2	CN2 -5	Heater (H)
〃 -6	-2	Heater (L)

Relay CN606 ~ PFU Heater CN1,CN2

Destination	NA	EU
A	Open	Open
B	Open	Short

D095/M077 POINT TO POINT DIAGRAM (2/9)

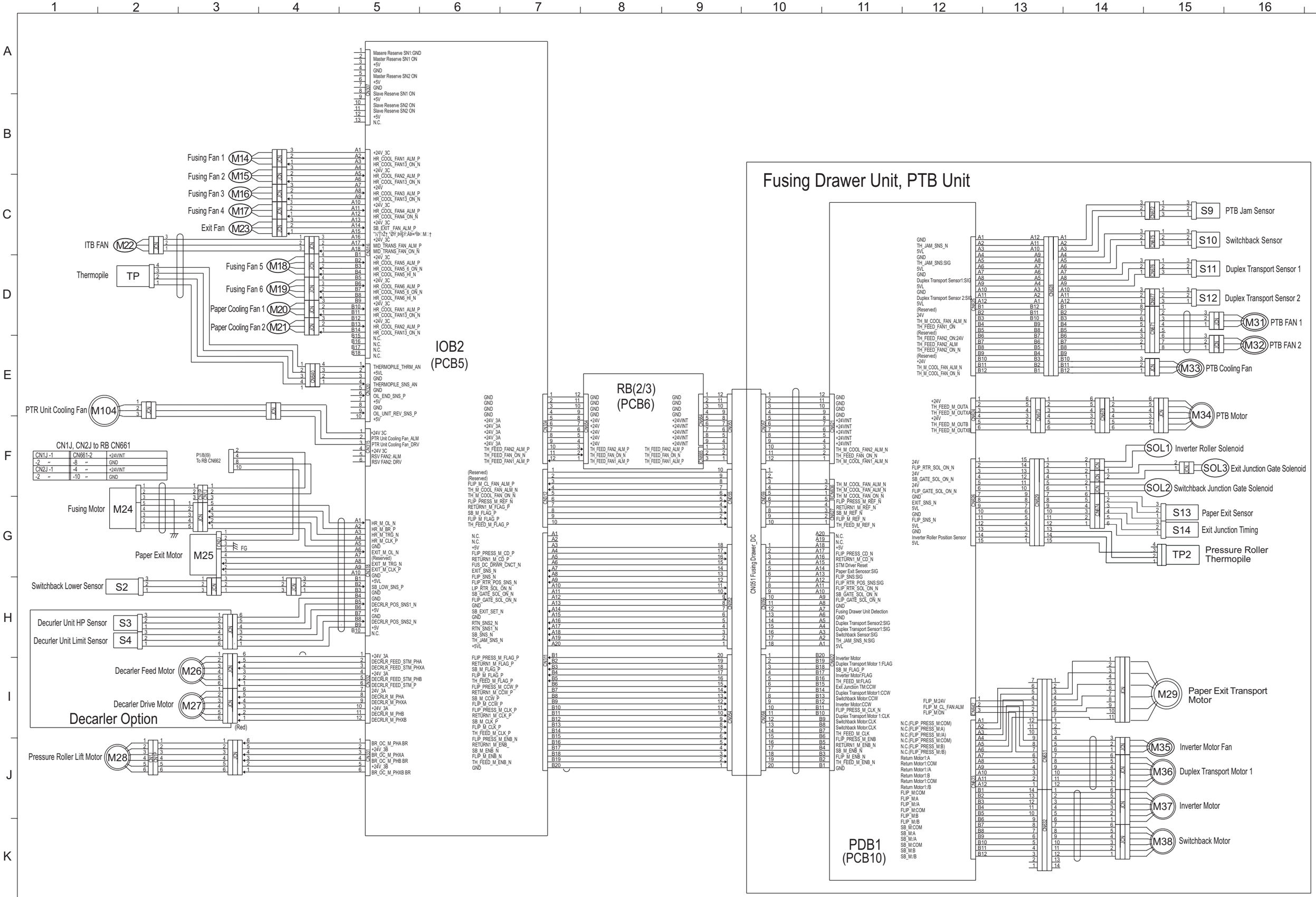

D095/M077 POINT TO POINT DIAGRAM (3/9)

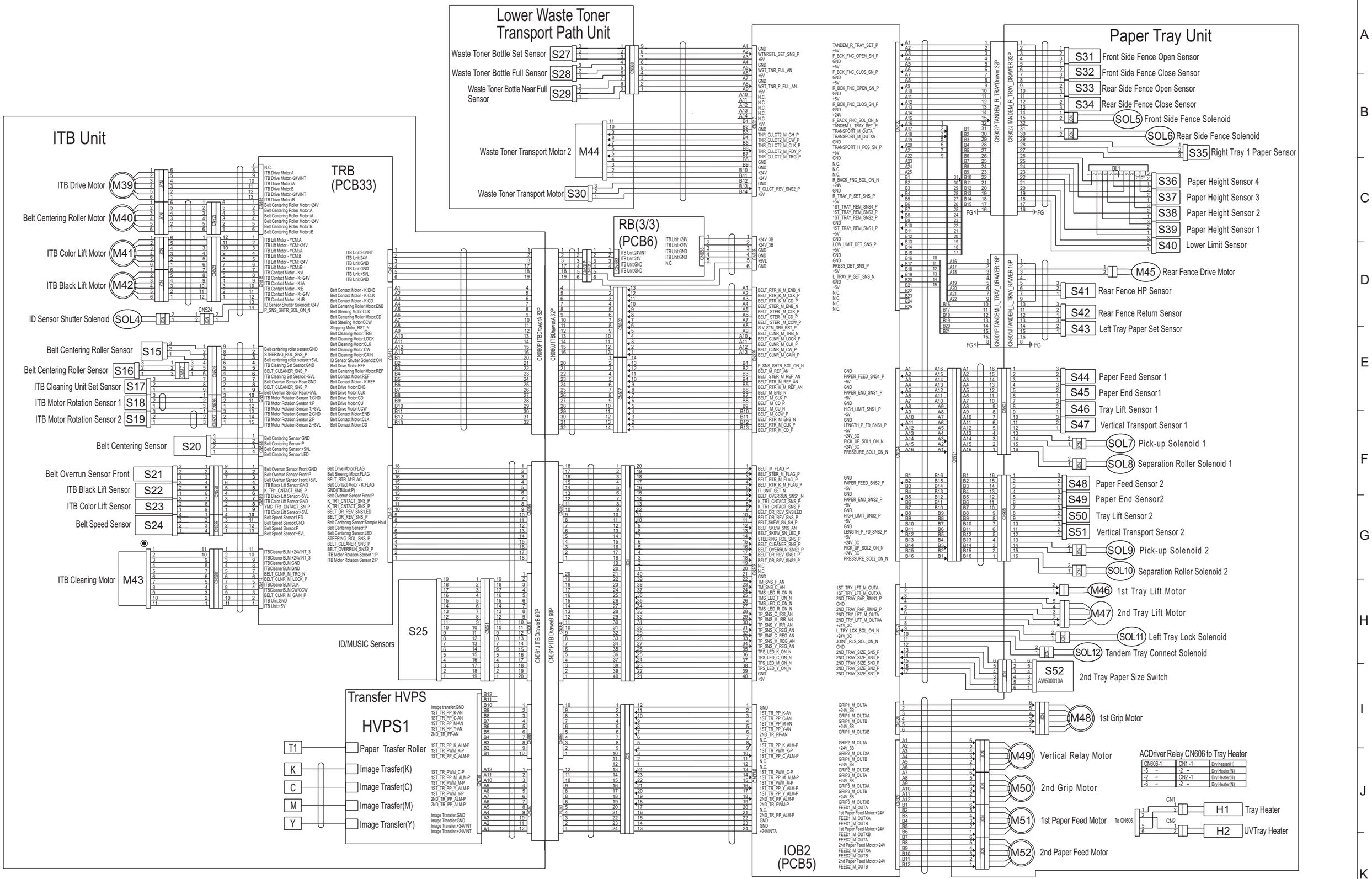

D095/M077 POINT TO POINT DIAGRAM (4/9)

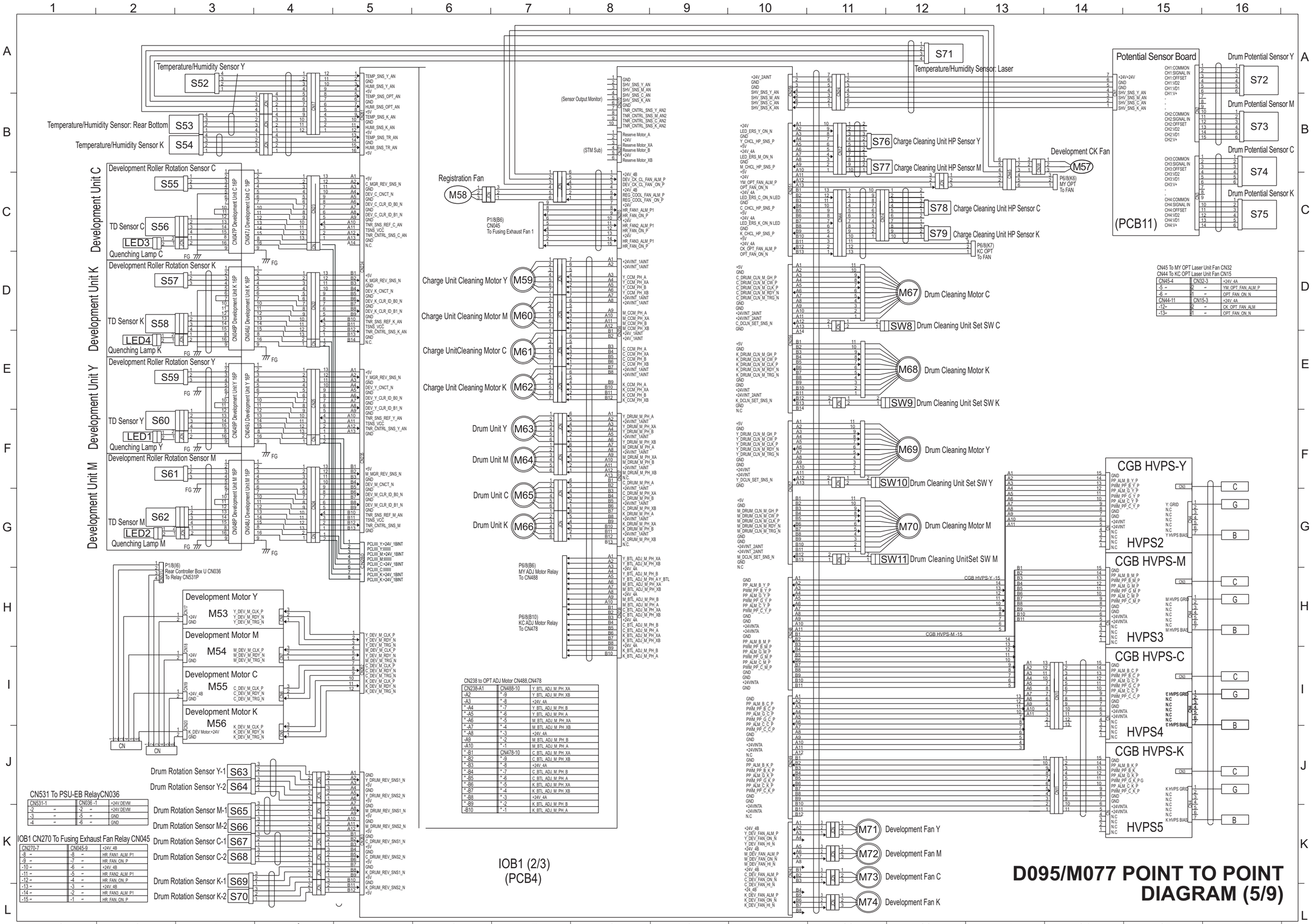

CN531 To PSU-EB RelayCN036

CN531-1	CN036 -1	+24V DEVM
-2 〃	-2 〃	+24V DEVM
-3 〃	-5 〃	GND
-4 〃	-6 〃	GND

IOB1 CN270 To Fusing Exhaust Fan Relay CN045

CN270-7	CN045-9	+24V 4B
-8 〃	-8 〃	HR_FAN1_ALM_P1
-9 〃	-7 〃	HR_FAN_ON_P
-10 〃	-6 〃	+24V 4B
-11 〃	-5 〃	HR_FAN2_ALM_P1
-12 〃	-4 〃	HR_FAN_ON_P
-13 〃	-3 〃	+24V 4B
-14 〃	-2 〃	HR_FAN3_ALM_P1
-15 〃	-1 〃	HR_FAN_ON_P

CN238 to OPT ADJ Motor CN488,CN478

CN238-A1	CN488-10	Y_BTL_ADJ_M_PH_XA
-A2	"-9	Y_BTL_ADJ_M_PH_XB
-A3	"-8	+24V 4A
"-A4	"-7	Y_BTL_ADJ_M_PH_B
"-A5	"-6	Y_BTL_ADJ_M_PH_A
"-A6	"-5	M_BTL_ADJ_M_PH_XA
"-A7	"-4	M_BTL_ADJ_M_PH_XB
"-A8	"-3	+24V 4A
-A9	"-2	M_BTL_ADJ_M_PH_B
-A10	"-1	M_BTL_ADJ_M_PH_A
"-B1	CN478-10	C_BTL_ADJ_M_PH_XA
"-B2	"-9	C_BTL_ADJ_M_PH_XB
"-B3	"-8	+24V 4A
"-B4	"-7	C_BTL_ADJ_M_PH_B
"-B5	"-6	C_BTL_ADJ_M_PH_A
"-B6	"-5	K_BTL_ADJ_M_PH_XA
"-B7	"-4	K_BTL_ADJ_M_PH_XB
"-B8	"-3	+24V 4A
"-B9	"-2	K_BTL_ADJ_M_PH_B
-B10	"-1	K_BTL_ADJ_M_PH_A

CN45 To MY OPT Laser Unit Fan CN32
CN44 To KC OPT Laser Unit Fan CN15

CN45-4	CN32-3	+24V 4A
-5 〃	2 〃	YM_OPT_FAN_ALM_P
-6 〃	1 〃	OPT_FAN_ON_N
CN44-11	CN15-3	+24V 4A
-12〃	2 〃	CK_OPT_FAN_ALM
-13〃	1 〃	OPT_FAN_ON_N

D095/M077 POINT TO POINT DIAGRAM (5/9)

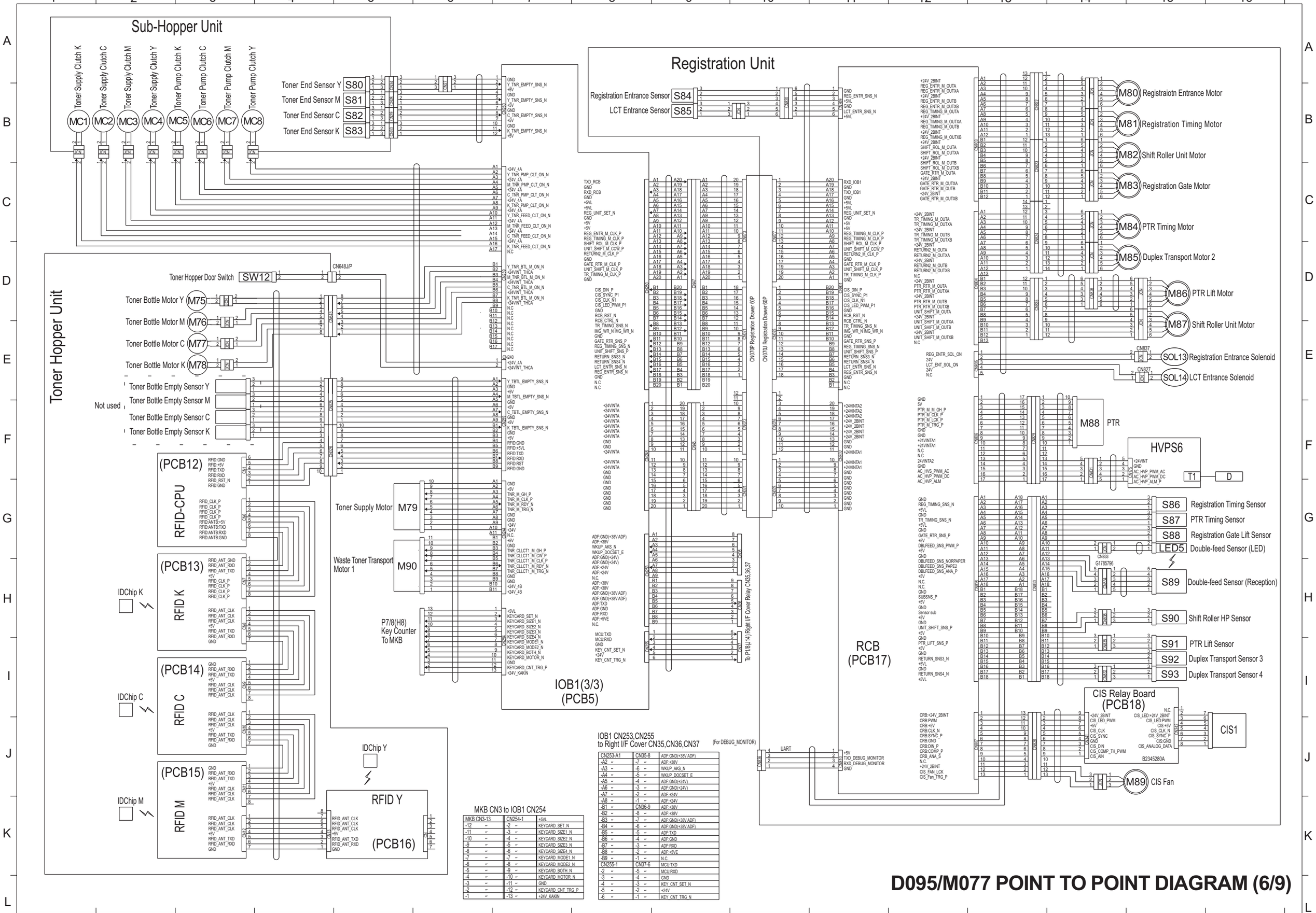
Sub-Hopper Unit
Toner Supply Clutch K
Toner Supply Clutch C
Toner Supply Clutch M
Toner Supply Clutch Y
Toner Pump Clutch K
Toner Pump Clutch C
Toner Pump Clutch M
Toner Pump Clutch Y
MC1
MC2
MC3
MC4
MC5
MC6
MC7
MC8
Toner End Sensor Y S80
Toner End Sensor M S81
Toner End Sensor C S82
Toner End Sensor K S83
Toner Hopper Unit
Toner Hopper Door Switch SW12
Toner Bottle Motor Y M75
Toner Bottle Motor M M76
Toner Bottle Motor C M77
Toner Bottle Motor K M78
Toner Bottle Empty Sensor Y
Toner Bottle Empty Sensor M
Toner Bottle Empty Sensor C
Toner Bottle Empty Sensor K
Not used
(PCB12)
RFID-CPU
(PCB13)
RFID K
IDChip K
(PCB14)
RFID C
IDChip C
(PCB15)
RFID M
IDChip M
Toner Supply Motor M79
Waste Toner Transport Motor 1 M90
P7/8(H8) Key Counter To MKB
IDChip Y
RFID Y
(PCB16)
IOB1(3/3)
(PCB5)
Registration Unit
Registration Entrance Sensor S84
LCT Entrance Sensor S85
CN071P Registration Drawer 60P
CN070L Registration Drawer 60P
To P1(8/14) Right I/F Cover Relay CN35,36,37
RCB
(PCB17)
M80 Registraiotn Entrance Motor
M81 Registration Timing Motor
M82 Shift Roller Unit Motor
M83 Registration Gate Motor
M84 PTR Timing Motor
M85 Duplex Transport Motor 2
M86 PTR Lift Motor
M87 Shift Roller Unit Motor
SOL13 Registration Entrance Solenoid
SOL14 LCT Entrance Solenoid
M88 PTR
HVPS6
T1
D
S86 Registration Timing Sensor
S87 PTR Timing Sensor
S88 Registration Gate Lift Sensor
LED5 Double-feed Sensor (LED)
S89 Double-feed Sensor (Reception)
S90 Shift Roller HP Sensor
S91 PTR Lift Sensor
S92 Duplex Transport Sensor 3
S93 Duplex Transport Sensor 4
CIS Relay Board
(PCB18)
CIS1
M89 CIS Fan
UART
IOB1 CN253,CN255
to Right I/F Cover CN35,CN36,CN37
(For DEBUG_MONITOR)
MKB CN3 to IOB1 CN254
D095/M077 POINT TO POINT DIAGRAM (6/9)

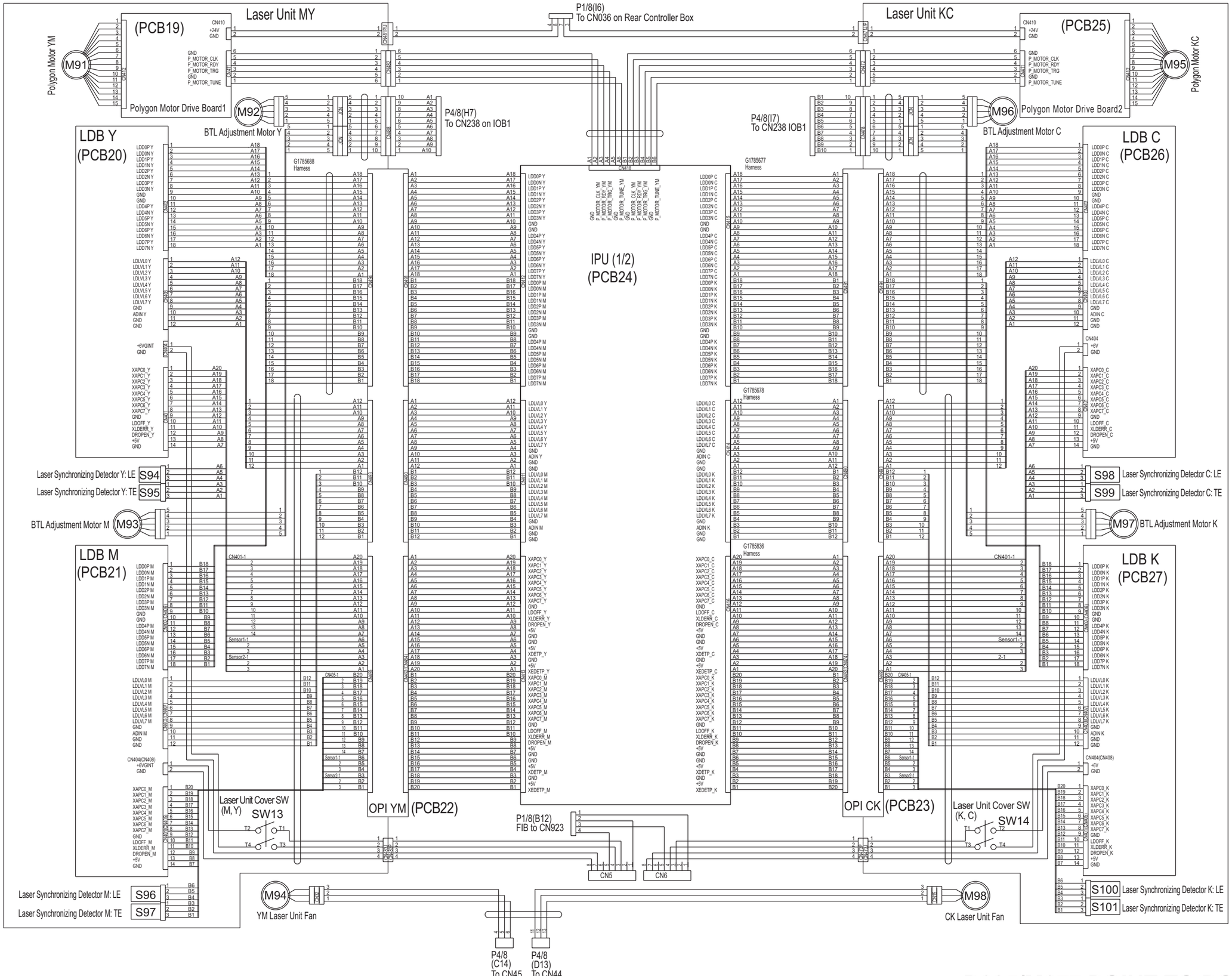

D095/M077 POINT TO POINT DIAGRAM (7/9)

Rear Controller Box Relay CN036 to CN471, CN481

CN036J-3	CN471 -1	+24V
-7 〃	-2 〃	GND
-4 〃	CN481 -1	+24V
-8 〃	-2 〃	GND

IOB2 CN238 to BTL Adjust. M Relay CN478, CN488

CN238-A1	CN488-10	+24V
-A2 〃	-9 〃	+24V
-A3 〃	-8 〃	GND
-A4 〃	-7 〃	GND
-A5 〃	-6 〃	+24V
-A6 〃	-5 〃	GND
-A7 〃	-4 〃	+24V
-A8 〃	-3 〃	GND
-A9 〃	-2 〃	+24V
-A10〃	-1 〃	GND
-B1 〃	CN478-10	GND
-B2 〃	-9 〃	+24V
-B3 〃	-8 〃	GND
-B4 〃	-7 〃	+24V
-B5 〃	-6 〃	GND
-B6 〃	-5 〃	GND
-B7 〃	-4 〃	+24V
-B8 〃	-3 〃	GND
-B9 〃	-2 〃	+24V
-B10〃	-1 〃	GND

FIB CN923 to Laser Unit Cover SW(+6V) CN5, CN6

CN923 -1	CN6 -1	+6V
-2 〃	CN5 -1	+6V
-3 〃	CN6 -5	GND
-4 〃	CN5 -5	GND

IOB2 CN251 to Laser Unit FAN Relay CN13, CN15

CN251-A11	CN13 -3	Laser Unit Fan YM:+24V
-A12〃	-2 〃	Laser Unit Fan YM:Alarm
-A13〃	-1 〃	Laser Unit Fan YM:Drive
-B11〃	CN15 -3	Laser Unit Fan CK:+24V
-B12〃	-2 〃	Laser Unit Fan CK:Alarm
-B13〃	-1 〃	Laser Unit Fan CK:Dorive

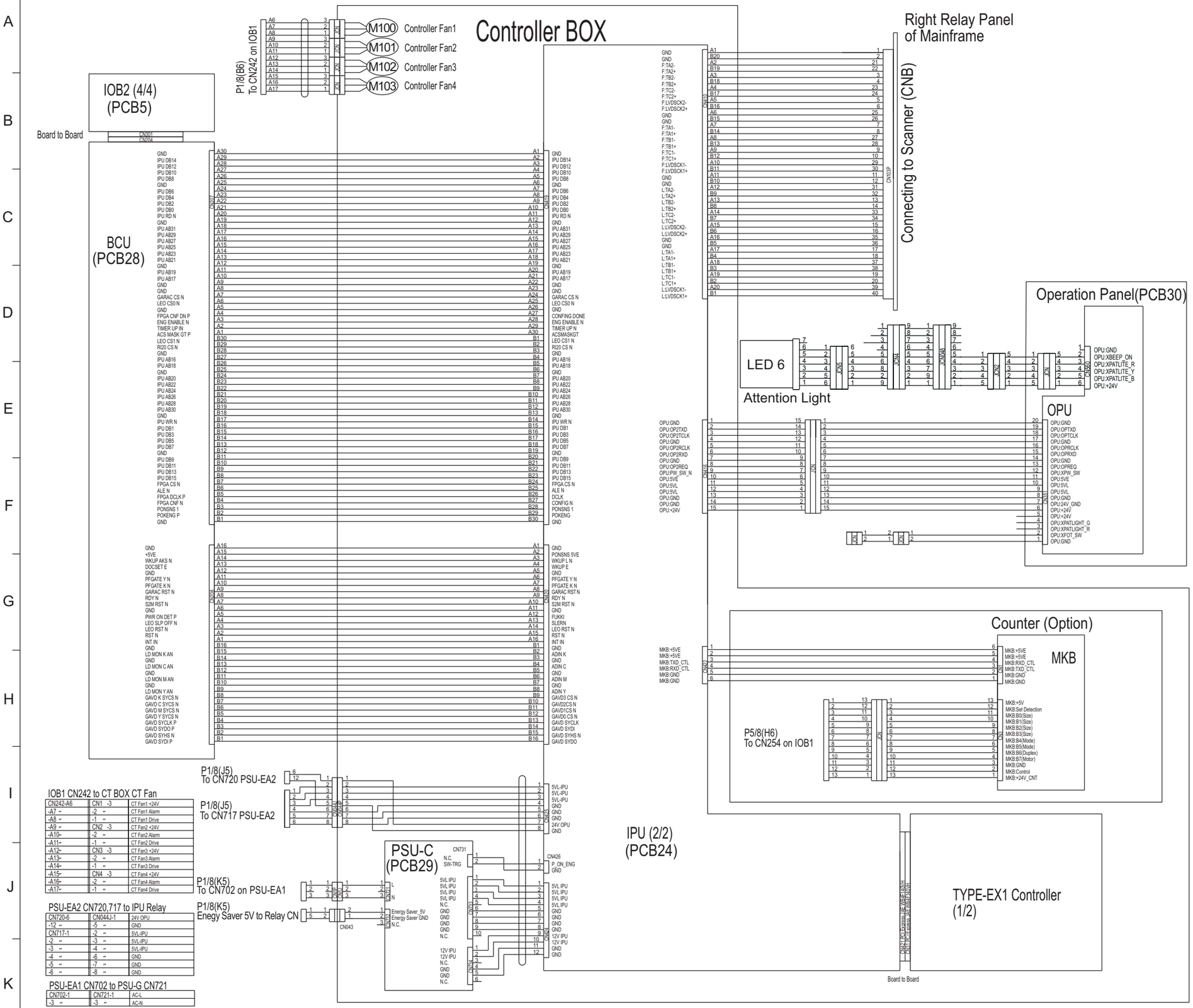

IOB-BCU I/F IOB2(CN301)-BCU(CN204)

1	GND	51	GND	101	+5V	151	GND
2	GND	52	M_DRUM_M_CLK_P	102	+5V	152	GATE RTR M_CLK_P
3	GND	53	GND	103	+5VL	153	GND
4	GND	54	C_DRUM_M_CLK_P	104	+5VL	154	UNIT SHIFT M_CLK_P
5	GND	55	GND	105	+5VL	155	GND
6	GND	56	Y_DRUM_M_CLK_P	106	+5VL	156	TR TIMING M_CLK_P
7	IOB SEI01 INT1 N	57	GND	107	IOB SEI02 INT1 N	157	GND
8	IOB SEI01 INT0 N	58	IOB1 CONECT A N	108	IOB SEI02 INT0 N	158	IOB1 CONECT C N
9	IOB_SEI01_CS_N	59	SLV TXD DEBUG P	109	IOB_SEI02_CS_N	159	MST TXD DEBUG P
10	IOB_SAB(30)	60	SLV RXD DEBUG P	110	IOB2 RST N	160	MST RXD DEBUG P
11	IOB_SAB(29)	61	NC	111	IOB_SAB(31)	161	FRONT DOOR OPEN N
12	GND	62	GND	112	GND	162	GND
13	IOB_SAB(26)	63	MST LED RED IOB N	113	IOB_SAB(28)	163	ERR_LED4_IOB_N
14	IOB_SAB(25)	64	MST LED ORNG IOB N	114	IOB_SAB(27)	164	ERR_LED3_IOB_N
15	IOB_SAB(22)	65	MST LED GRN IOB N	115	IOB_SAB(24)	165	ERR_LED2_IOB_N
16	IOB_SAB(21)	66	FPGA_LED_IOB_N	116	IOB_SAB(23)	166	ERR_LED1_IOB_N
17	GND	67	GND	117	GND	167	GND
18	IOB SWR N	68	TM SNS F AN	118	IOB SRD N	168	TMS LED F PWM P
19	GND	69	GND	119	GND	169	GND
20	IOB_SDB(5)	70	TM_SNS_C_AN	120	IOB_SDB(7)	170	TMS LED C PWM P
21	IOB_SDB(4)	71	GND	121	IOB_SDB(6)	171	GND
22	IOB SDB(1)	72	TM SNS R AN	122	IOB SDB(3)	172	TMS LED R PWM P
23	IOB SDB(0)	73	GND	123	IOB SDB(2)	173	GND
24	GND	74	IOB_MEI06_CS_N	124	GND	174	IOB MEI06 INT N
25	IOB MST RST SW N	75	IOB_MEI05_CS_N	125	IOB SLV RST SW N	175	IOB MEI05 INT N
26	GND	76	IOB1 BUF ENB N	126	BELT SKEW SNS LED P	176	IOB MEI04 INT N
27	BELT SKEW SNS AN	77	IOB MEI02 INT N	127	BELT SKEW SNS SH P	177	IOB MEI03 INT N
28	GND	78	IOB MEI01 INT N	128	SLV LED RED IOB N	178	IOB_M_RD_WR_N
29	BELT OVERRUN SNS2 N	79	GND	129	SLV LED ORNG IOB N	179	GND
30	BELT OVERRUN SNS1 N	80	IOB_MEI02_CS_N	130	SLV LED GRN IOB N	180	IOB_MEI04_CS_N
31	GND	81	IOB_MEI01_CS_N	131	GND	181	IOB_MEI03_CS_N
32	BELT FR REV SNS2 N	82	IOB_MAB(30)	132	BELT DR REV SNS2 N	182	IOB1 RST N
33	BELT FR REV SNS1 N	83	IOB_MAB(29)	133	BELT DR REV SNS1 N	183	IOB_MAB(31)
34	GND	84	GND	134	GND	184	GND
35	IOB PFGATE K N	85	IOB_MAB(26)	135	BELT M CLK P	185	IOB_MAB(28)
36	RCB_RST_N	86	IOB_MAB(25)	136	GND	186	IOB_MAB(27)
37	GND	87	IOB_MAB(22)	137	BELT RESERVE SNS N	187	IOB_MAB(24)
38	K DRUM REV SNS2 N	88	IOB_MAB(21)	138	TR TIMING SNS N	188	IOB_MAB(23)
39	K DRUM REV SNS1 N	89	GND	139	IOB2_CONECT_N	189	GND
40	GND	90	IOB_MWR_N	140	GND	190	IOB_MRD_N
41	M DRUM REV SNS2 N	91	GND	141	CIS LED PWM P	191	GND
42	M DRUM REV SNS1 N	92	IOB_MDB(5)	142	GND	192	IOB_MDB(7)
43	GND	93	IOB_MDB(4)	143	CIS_CLK_N	193	IOB_MDB(6)
44	C DRUM REV SNS2 N	94	IOB_MDB(1)	144	GND	194	IOB_MDB(3)
45	C DRUM REV SNS1 N	95	IOB_MDB(0)	145	CIS SYNC P	195	IOB_MDB(2)
46	GND	96	GND	146	CIS DIN P	196	GND
47	Y DRUM REV SNS2 N	97	SBU_RST_N	147	GND	197	SBU_SYCLK_P
48	Y DRUM REV SNS1 N	98	SBU DASL F SEL P	148	+5VE	198	SBU_SYDO_P
49	GND	99	SBU SYCS N	149	WKUP AKS N	199	SBU SYDI P
50	K_DRUM_M_CLK_P	100	GND	150	WKUP DOCSET E	200	GND

GROUP-E:ENGINE I/F IPU(CN421)-Controller(CN31)

1	+24V	36	PERn3	71	+5V	106	+5VE
2	NC	37	GND	72	NC	107	NC
3	GND	38	PERST#	73	GND	108	GND
4	GND	39	GND	74	GND	109	GND
5	RSVD	40	RSVD	75	GND	110	GND
6	WAKE#(NC)	41	RSVD(OP4_BUZZER)	76	GND	111	NC
7	GND	42	GND	77	GND	112	+12V
8	REFCLK1+	43	GND	78	NC	113	+12V
9	REFCLK1-	44	GND	79	+5VE	114	+12V
10	GND	45	GND	80	+5VE	115	+12V
11	REFCLK0+	46	GND	81	+5VE	116	+12V
12	REFCLK0-	47	PETXD	82	+5VE	117	+12V
13	GND	48	PERXD	83	+5VE	118	+12V
14	PETp0	49	GND	84	+5VE	119	+12V
15	PETn0	50	TIMER_UP#	85	+5VE	120	+12V
16	GND	51	ENG_ENABLE#	86	+5VE	121	+12V
17	PERp0	52	GND	87	+5VE	122	+12V
18	PERn0	53	PONSENS#	88	+5VE	123	+12V
19	GND	54	ENGRDY1#	89	+5VE	124	+12V
20	PETp1	55	GND	90	+5VE	125	NC
21	PETn1	56	PW_SW#	91	+5VE	126	GND
22	GND	57	WKUP_L#	92	+5VE	127	OP2_TCLK
23	PERp1	58	WKUP_E	93	+5VE	128	OP2_TXD
24	PERn1	59	VDET_EPCI	94	+5VE	129	OP2_REQ
25	GND	60	PONENG#	95	+5VE	130	OP2_RCLK
26	PETp2	61	GND	96	+5VE	131	OP2_RXD
27	PETn2	62	PONPCI#	97	+5VE	132	GND
28	GND	63	PSAVE_FCU	98	+5VE	133	NC(OP0_CLK)
29	PERp2	64	GND	99	+5VE	134	GND
30	PERn2	65	USB_0D+	100	+5VE	135	NC(OP0_TXD)
31	GND	66	USB_0D-	101	+5VE	136	NC(OP0_RXD)
32	PETp3	67	GND	102	+5VE	137	NC(OP4_IRQ#)
33	PETn3	68	USB_1D+	103	+5VE	138	NC(OP4 ONLINE_LED_ON#)
34	GND	69	USB_1D-	104	+5VE	139	NC(OP4_RST#)
35	PERp3	70	GND	105	+5VE	140	GND

IOB1 CN242 to CT BOX CT Fan

CN242-A6	CN1 -3	CT Fan1 +24V
-A7 〃	-2 〃	CT Fan1 Alarm
-A8 〃	-1 〃	CT Fan1 Drive
-A9 〃	CN2 -3	CT Fan2 +24V
-A10〃	-2 〃	CT Fan2 Alarm
-A11〃	-1 〃	CT Fan2 Drive
-A12〃	CN3 -3	CT Fan3 +24V
-A13〃	-2 〃	CT Fan3 Alarm
-A14〃	-1 〃	CT Fan3 Drive
-A15〃	CN4 -3	CT Fan4 +24V
-A16〃	-2 〃	CT Fan4 Alarm
-A17〃	-1 〃	CT Fan4 Drive

PSU-EA2 CN720,717 to IPU Relay

CN720-6	CN044J-1	24V OPU
-12 〃	-5 〃	GND
CN717-1	-2 〃	5VL-IPU
-2 〃	-3 〃	5VL-IPU
-3 〃	-4 〃	5VL-IPU
-4 〃	-6 〃	GND
-5 〃	-7 〃	GND
-6 〃	-8 〃	GND

PSU-EA1 CN702 to PSU-G CN721

CN702-1	CN721-1	AC-L
-3 〃	-3 〃	AC-N

PSU Energy Saver 5V CN to PSU-G CN732

CN -1	CN732-1	Energy Saver +5V
-5 〃	-2 〃	GND

Counter (MKB) CN3 to IOB1 CN254

MKB CN3-13	CN254-1	MKB:+5V
-12 〃	-2 〃	MKB:Set Detection
-11 〃	-3 〃	MKB:B0(Size)
-10 〃	-4 〃	MKB:B1(Size)
-9 〃	-5 〃	MKB:B2(Size)
-8 〃	-6 〃	MKB:B3(Size)
-7 〃	-7 〃	MKB:B4(Mode)
-6 〃	-8 〃	MKB:B5(Mode)
-5 〃	-9 〃	MKB:B6(Duplex)
-4 〃	-10 〃	MKB:B7(Motor)
-3 〃	-11 〃	MKB:GND
-2 〃	-12 〃	MKB:Control
-1 〃	-13 〃	MKB:+24V_CNT

D095/M077 POINT TO POINT DIAGRAM (8/9)

D095/M077 POINT TO POINT DIAGRAM (9/9)

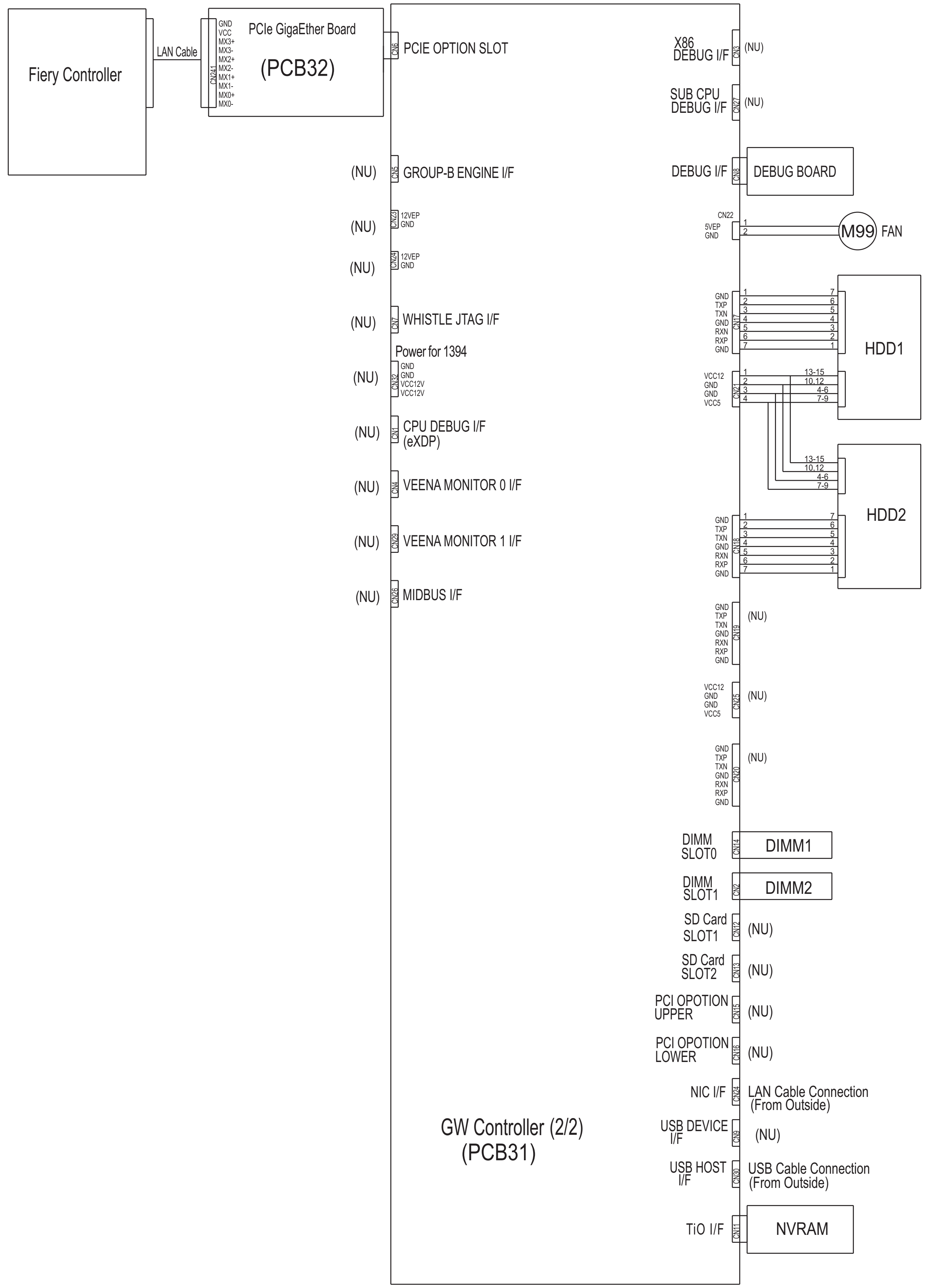

GROUP-B:ENGINE I/F (CN5)

1	+5VE(+3.3VE)	51	PCIAD58	101	+5VE(+3.3VE)	151	PCIAD59
2	+5VE(+3.3VE)	52	PCIAD56	102	+5VE(+3.3VE)	152	PCIAD57
3	+5VE(+3.3VE)	53	GND	103	+5VE(+3.3VE)	153	GND
4	+5VE(+3.3VE)	54	PCIAD54	104	+5VE(+3.3VE)	154	PCIAD55
5	+5VE(+3.3VE)	55	PCIAD52	105	+5VE(+3.3VE)	155	PCIAD53
6	+5VE	56	PCIAD50	106	+5VE	156	PCIAD51
7	+5VE	57	PCIAD48	107	+5VE	157	PCIAD49
8	+5V	58	GND	108	+5VE	158	GND
9	INTD#	59	PCIAD46	109	INTC#	159	PCIAD47
10	INTA#	60	PCIAD44	110	INTB#	160	PCIAD45
11	REQ6#	61	PCIAD42	111	REQ3#	161	PCIAD43
12	GNT6#	62	PCIAD40	112	GNT3#	162	PCIAD41
13	REQ1#	63	GND	113	REQ2#	163	GND
14	GNT1#	64	PCIAD38	114	GNT2#	164	PCIAD39
15	GND	65	PCIAD36	115	GND	165	PCIAD37
16	PCIAD30	66	PCIAD34	116	PCIAD31	166	PCIAD35
17	PCIAD28	67	PCIAD32	117	PCIAD29	167	PCIAD33
18	PCIAD26	68	GND	118	PCIAD27	168	GND
19	PCIAD24	69	PETXD	119	PCIAD25	169	PERXD
20	GND	70	PONSENS#	120	GND	170	INTF#(Reserved)
21	PCIAD22	71	OP2_TCLK/OP0_CLK	121	PCIAD23	171	OP2_RCLK
22	PCIAD20	72	OP2_TXD/OP0_TXD	122	PCIAD21	172	OP2_RXD/OP0_RXD
23	PCIAD18	73	OP2_REQ	123	PCIAD19	173	SD_CMDDIR
24	PCIAD16	74	REQ5#	124	PCIAD17	174	SD_DTDIR
25	GND	75	SD_DT_EN#	125	GND	175	GNT5#
26	C/BE2#	76	SD_CMD_EN#	126	C/BE3#	176	PCICLKE6
27	C/BE0#	77	GND	127	C/BE1#	177	GND
28	PCIRST#	78	SDCLK	128	PME#	178	SD_DT0
29	DEVSEL#	79	SDCD#	129	TRDY#	179	SD_DT1
30	IRDY#	80	SD_CMD	130	FRAME#	180	SD_DT2
31	PERR#	81	SDWP	131	STOP#	181	SD_DT3
32	PAR	82	GND	132	SERR#	182	GND
33	GND	83	OP4_CLK/OP0_CLK	133	GND	183	ENGRDY1#
34	PCIAD14	84	OP4_CS#/OP0_TXD	134	PCIAD15	184	ENGRDY2#
35	PCIAD12	85	OP4_SDA/OP0_RXD	135	PCIAD13	185	PW_SW#
36	PCIAD10	86	OP4_IRQ#	136	PCIAD11	186	WKUP_L#
37	PCIAD8	87	OP4_ONLINE_LED_ON#	137	PCIAD9	187	WKUP_E
38	GND	88	CSSTXD	138	GND	188	OP4_RST#
39	PCIAD6	89	CSSRXD	139	PCIAD7	189	RESERVE
40	PCIAD4	90	PONENG#	140	PCIAD5	190	VDET_EPCI
41	PCIAD2	91	PONPCI#	141	PCIAD3	191	SD_POWER_+3.3VE
42	PCIAD0	92	PSAVE_FCU	142	PCIAD1	192	PCICLKE3
43	GND	93	GND	143	GND	193	GND
44	C/BE6#	94	PCICLKE1	144	C/BE7#	194	PCICLKE2
45	C/BE4#	95	GND	145	C/BE5#	195	GND
46	64REQ#	96	PCICLKE4	146	64ACK#	196	PCICLKE5
47	64PER	97	GND	147	INTE#	197	GND
48	GND	98	+12VE	148	GND	198	+12VE
49	PCIAD62	99	+12VE	149	PCIAD63	199	+12VE
50	PCIAD60	100	+12VE	150	PCIAD61	200	+12VE

PCI-Express(x1)Option I/F (CN6)

A1	PRSNT1#	B1	+12V
A2	+12V	B2	+12V
A3	+12V	B3	RSVD
A4	GND	B4	GND
A5	JTAG2	B5	SMBCLK
A6	JTAG3	B6	SMBDAT
A7	JTAG4	B7	GND
A8	JTAG5	B8	+3.3V
A9	+3.3V	B9	JTAG1
A10	+3.3V	B10	+3.3VAUX
A11	PERST#	B11	WAKE#
A12	GND	B12	RSVD
A13	REFCLK+	B13	GND
A14	REFCLK-	B14	PETp0
A15	GND	B15	PETn0
A16	PERp0	B16	GND
A17	PERn0	B17	PRSNT2#
A18	GND	B18	GND

JTAG I/F (CN7)

1	TRST
2	TDI
3	TDO
4	TMS
5	TCK
6	RESET#
7	DINT
8	3.3VE_WSL
9	NC
10	GND
11	GND
12	GND
13	GND
14	GND

VEENA MONITOR 0 I/F (CN4)

1	MON33	21	GND
2	MON32	22	MON16
3	MON31	23	MON15
4	MON30	24	MON14
5	MON29	25	MON13
6	MON28	26	MON12
7	MON27	27	MON11
8	MON26	28	MON10
9	GND	29	MON9
10	GND	30	MON8
11	MON25	31	GND
12	MON24	32	GND
13	MON23	33	MON7
14	MON22	34	MON6
15	MON21	35	MON5
16	MON20	36	MON4
17	MON19	37	MON3
18	MON18	38	MON2
19	MON17	39	MON1
20	GND	40	MON0

VEENA MONITOR 1 I/F (CN29)

1	GND	21	GND
2	GND	22	MON48
3	MON63	23	MON47
4	MON62	24	MON46
5	MON61	25	MON45
6	MON60	26	MON44
7	MON59	27	MON43
8	MON58	28	MON42
9	MON57	29	GND
10	MON56	30	GND
11	GND	31	MON41
12	GND	32	MON40
13	MON55	33	MON39
14	MON54	34	MON38
15	MON53	35	MON37
16	MON52	36	MON36
17	MON51	37	MON35
18	MON50	38	MON34
19	MON49	39	GND
20	GND	40	GND

CPU DEBUG I/F(eXDP) (CN1)

1	GND	31	GND
2	GND	32	GND
3	OBSFN_A0	33	OBSDATA_B(2)
4	OBSFN_C0	34	OBSDATA_D(2)
5	OBSFN_A1	35	OBSDATA_B(3)
6	OBSFN_C1	36	OBSDATA_D(3)
7	GND	37	GND
8	GND	38	GND
9	OBSDATA_A(0)	39	HOOK0
10	OBSDATA_C(0)	40	HOOK4
11	OBSDATA_A(1)	41	HOOK1
12	OBSDATA_C(1)	42	HOOK5
13	GND	43	VCC_OBS_AB
14	GND	44	VCC_OBS_CD
15	OBSDATA_A(2)	45	HOOK2
16	OBSDATA_C(2)	46	HOOK6
17	OBSDATA_A(3)	47	HOOK3
18	OBSDATA_C(3)	48	HOOK7
19	GND	49	GND
20	GND	50	GND
21	OBSFN_B0	51	SDA
22	OBSFN_D0	52	TDO
23	OBSFN_B1	53	SCL
24	OBSFN_D1	54	TRSTn
25	GND	55	TCK1
26	GND	56	TDI
27	OBSDATA_B(0)	57	TCK0
28	OBSDATA_D(0)	58	TMS
29	OBSDATA_B(1)	59	GND
30	OBSDATA_D(1)	60	GND

MIDBUS (CN26)

1	C0p_Upstream
2	GND
3	C0n_Upstream
4	C0p_Downstream
5	GND
6	C0n_Downstream
7	C1p_Upstream
8	GND
9	C1n_Upstream
10	C1p_Downstream
11	GND
12	C1n_Downstream
13	C2p_Upstream
14	GND
15	C2n_Upstream
16	C2p_Downstream
17	GND
18	C2n_Downstream
19	C3p_Upstream
20	GND
21	C3n_Upstream
22	C3p_Downstream
23	GND
24	C3n_Downstream

PCI OPTION I/F (CN15,CN16)

1	GND	45	XDEVSEL
2	XINTC	46	XSTOP
3	GND	47	GND
4	XINTC	48	XPERR
5	GND	49	XSERR
6	RESERVE	50	PAR
7	GND	51	GND
8	XPCIRST	52	C/BE1
9	GND	53	AD15
10	PCICLK#	54	AD14
11	GND	55	GND
12	XGNT#	56	AD13
13	GND	57	AD12
14	XREQ	58	AD11
15	GND	59	GND
16	XPME	60	AD10
17	AD31	61	AD9
18	AD30	62	AD8
19	AD29	63	GND
20	AD28	64	C/BE0
21	AD27	65	AD7
22	AD26	66	AD6
23	GND	67	AD5
24	AD25	68	AD4
25	AD24	69	AD3
26	C/BE3	70	AD2
27	GND	71	+3.3V
28	IDSEL	72	AD1
29	AD23	73	+3.3V
30	AD22	74	AD0
31	GND	75	+3.3V
32	AD21	76	RESERVE
33	AD20	77	+3.3V
34	AD19	78	RESERVE
35	GND	79	+3.3V
36	AD18	80	RESERVE
37	AD17	81	+3.3V
38	AD16	82	RESERVE
39	GND	83	+5V
40	C/BE2	84	RESERVE
41	XFRAME	85	+5V
42	XIRDY	86	RESERVE
43	GND	87	+3.3V_AUX
44	XTRDY	88	RESERVE

DDR2 I/F (CN2,CN14)

1	VREF	51	DQS2	101	A1	151	DQ42
2	VSS	52	DM2	102	A0	152	DQ46
3	VSS	53	VSS	103	VDD	153	DQ43
4	DQ4	54	VSS	104	VDD	154	DQ47
5	DQ0	55	DQ18	105	A10/AP	155	VSS
6	DQ5	56	DQ22	106	BA1	156	VSS
7	DQ1	57	DQ19	107	BA0	157	DQ48
8	VSS	58	DQ23	108	RAS#	158	DQ52
9	VSS	59	VSS	109	WE#	159	DQ49
10	DM0	60	VSS	110	S0#	160	DQ53
11	DQS0#	61	DQ24	111	VDD	161	VSS
12	VSS	62	DQ28	112	VDD	162	VSS
13	DQS0	63	DQ25	113	CAS#	163	NC
14	DQ6	64	DQ29	114	ODT0	164	CK1
15	VSS	65	VSS	115	S1#	165	VSS
16	DQ7	66	VSS	116	A13	166	CK1#
17	DQ2	67	DM3	117	VDD	167	DQS6#
18	VSS	68	DQS3#	118	VDD	168	VSS
19	DQ3	69	NC	119	ODT1	169	DQS6
20	DQ12	70	DQS3	120	NC	170	DM6
21	VSS	71	VSS	121	VSS	171	VSS
22	DQ13	72	VSS	122	VSS	172	VSS
23	DQ8	73	DQ26	123	DQ32	173	DQ50
24	VSS	74	DQ30	124	DQ36	174	DQ54
25	DQ9	75	DQ27	125	DQ33	175	DQ51
26	DM1	76	DQ31	126	DQ37	176	DQ55
27	VSS	77	VSS	127	VSS	177	VSS
28	VSS	78	VSS	128	VSS	178	VSS
29	DQS1#	79	CKE0	129	DQS4#	179	DQ56
30	CK0	80	NC	130	DM4	180	DQ60
31	DQS1	81	VDD	131	DQS4	181	DQ57
32	CK0#	82	VDD	132	VSS	182	DQ61
33	VSS	83	NC	133	VSS	183	VSS
34	VSS	84	NC	134	DQ38	184	VSS
35	DQ10	85	BA2	135	DQ34	185	DM7
36	DQ14	86	NC	136	DQ39	186	DQS7#
37	DQ11	87	VDD	137	DQ35	187	VSS
38	DQ15	88	VDD	138	VSS	188	DQS7
39	VSS	89	A12	139	VSS	189	DQ58
40	VSS	90	A11	140	DQ44	190	VSS
41	VSS	91	A9	141	DQ40	191	DQ59
42	VSS	92	A7	142	DQ45	192	DQ62
43	DQ16	93	A8	143	DQ41	193	VSS
44	DQ20	94	A6	144	VSS	194	DQ63
45	DQ17	95	VDD	145	VSS	195	SDA
46	DQ21	96	VDD	146	DQS5#	196	VSS
47	VSS	97	A5	147	DM5	197	SCL
48	VSS	98	A4	148	DQS5	198	SA0
49	DQS2#	99	A3	149	VSS	199	VDDSPD
50	NC	100	A2	150	VSS	200	SA1

SD CARD I/F (CN12,CN13)

1	DAT3
2	CMD
3	GND
4	+3.3V
5	CLK
6	GND
7	DAT0
8	DAT1
9	DAT2
10	CD
11	GND
12	WP

DEBUG(MIPS) SERIAL (CN8)

1	3.3VE/5VEP
2	GND
3	GND
4	DB0TXD
5	DB0RXD
6	DB1TXD
7	DB1RXD
8	NC

DEBUG(x86) I/F (CN3)

1	DBINMI	26	LPC_FRAME
2	DBORXD_B	27	LPC_DREQ0#
3	PEACE_RXD	28	INT_SERIRQ
4	DBOTXD_B	29	5VEP
5	PEACE_TXD	30	5VEP
6	USBPP1_DB	31	5VEP
7	USBPN1_DB	32	5VEP
8	(RESERVED)	33	5VEP
9	GND	34	5VEP
10	SMB_CLK	35	GND
11	SMB_DATA	36	GND
12	EXT_SMI#	37	GND
13	GND	38	GND
14	CLK_SIO48	39	GND
15	GND	40	GND
16	PCIRST2#	41	3.3VE
17	GND	42	3.3VE
18	CLK_SIO_PCI	43	3.3VE
19	GND	44	3.3VE
20	A20GATE	45	(RESERVED)
21	RCIN#	46	(RESERVED)
22	LPC_AD3	47	(RESERVED)
23	LPC_AD2	48	(RESERVED)
24	LPC_AD1	49	(RESERVED)
25	LPC_AD0	50	(RESERVED)

DEBUG(SUB CPU/VEENA) SERIAL I/F (CN27)

1	3.3VE
2	GND
3	GND
4	DBSTXD
5	DBSRXD
6	DBVTXD
7	DBVRXD
8	NC

USB DEVICE I/F (CN9)

1	VBUS
2	D-
3	D+
4	GND

USB2.0 HOST I/F (CN30)

1	USB_OC#
2	USBP2#
3	USBP2
4	GND
5	USB_OC#
6	USBP3#
7	USBP3
8	GND

Giga Ether I/F (CN24)

1	VCC
2	MX0+
3	MX0-
4	MX1+
5	MX1-
6	MX2+
7	MX2-
8	MX3+
9	MX3-
10	GND
D1	-
D2	+
D3	+
D4	-

TiO1 OPTION I/F (CN11)

1	GND	16	SPI2 CLK
2	GND	17	SPI2 CS3#
3	VCC_SPI	18	PD2
4	VCC_I2C	19	RESERVE
5	SPI1 CS0#	20	RESET#
6	SPI1 CS1#	21	SP12 CS2#
7	SPI1 CS2#	22	INT_RTC#
8	SPI1 CS3#	23	I2C CLK
9	SPI1 DIN	24	I2C DATA
10	SPI1 CLK	25	PD0
11	SPI1 DOUT	26	PD1
12	SPI2 DOUT	27	VCC_I2C
13	SPI2 CS1#	28	VCC_SPI
14	SPI2 CS0#	29	GND
15	SPI2 DIN	30	GND

D095/M077 ELECTRICAL COMPONENT LAYOUT (1/5)

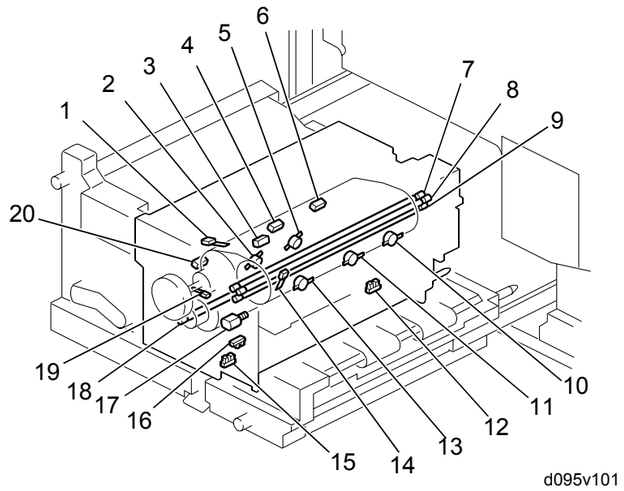

Fig.1

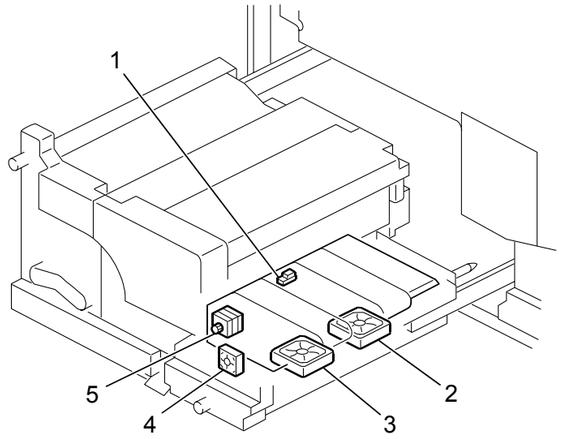

Fig.2

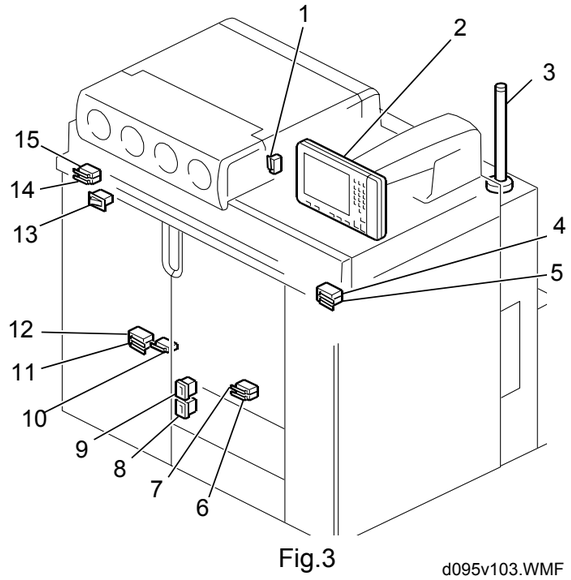

Fig.3

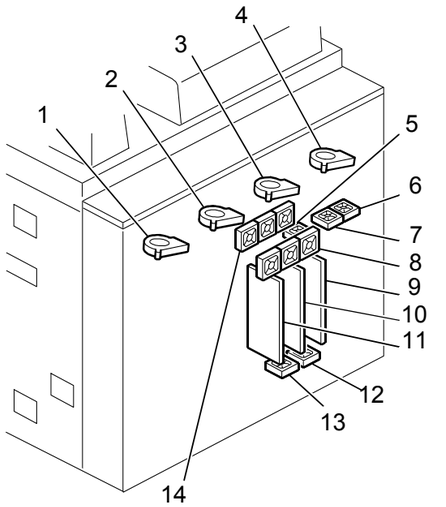

Fig.4

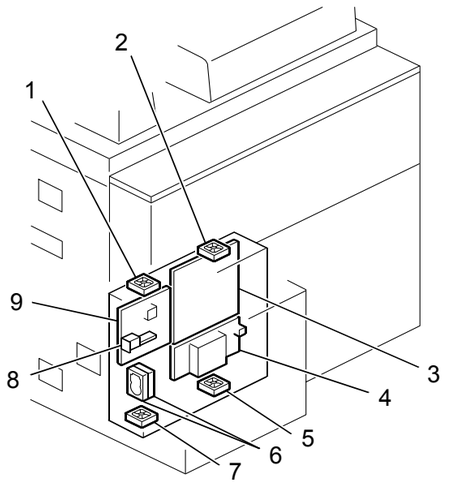

Fig.5

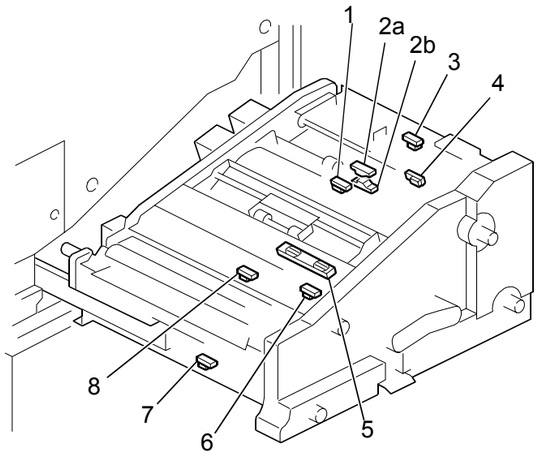

Fig.6

D095/M077 ELECTRICAL COMPONENT LAYOUT (2/5)

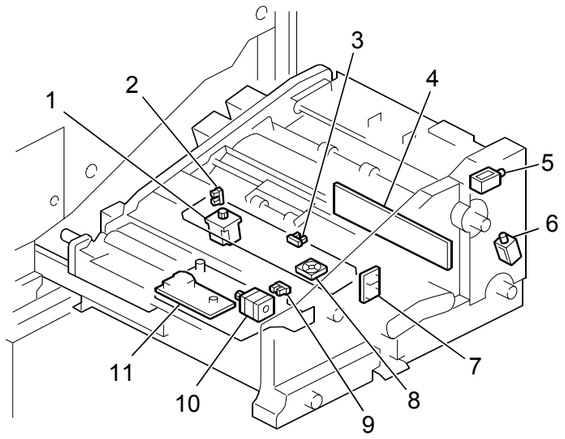

Fig.7

G178V107

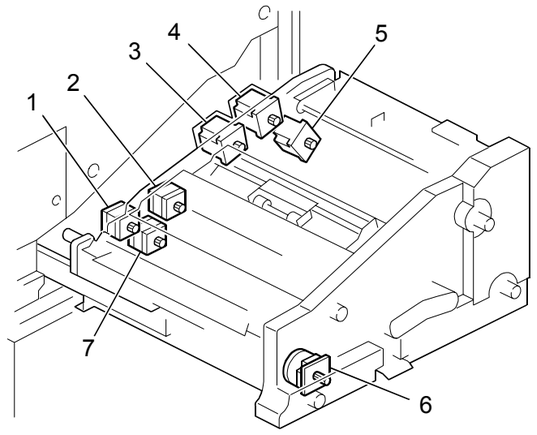

Fig.8

G178V108

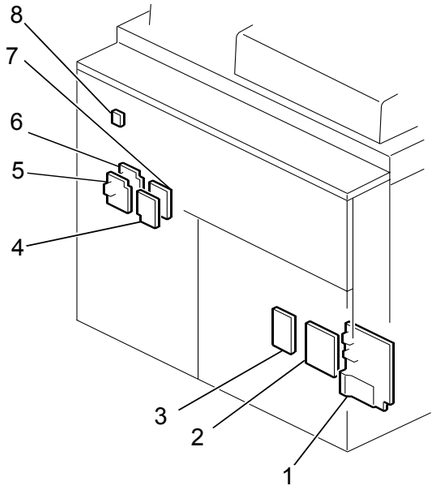

Fig.9

d095v109

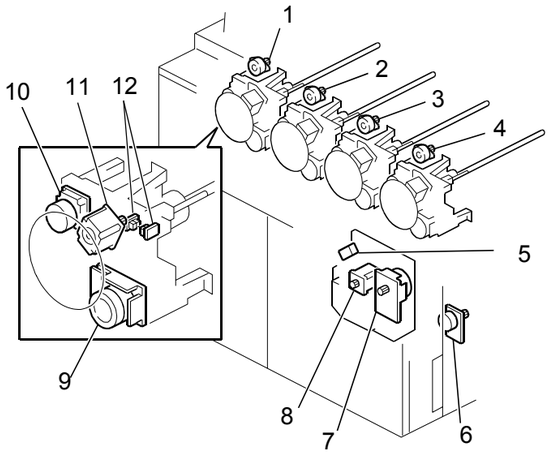

Fig.10

d095v110

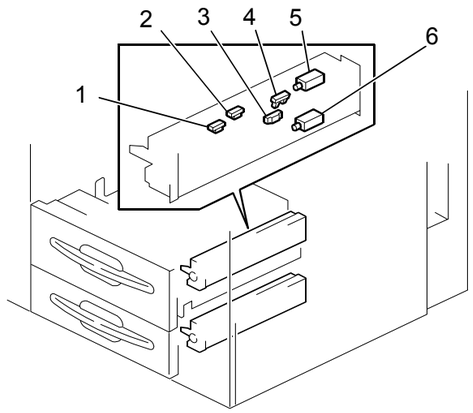

Fig.11

G178V111

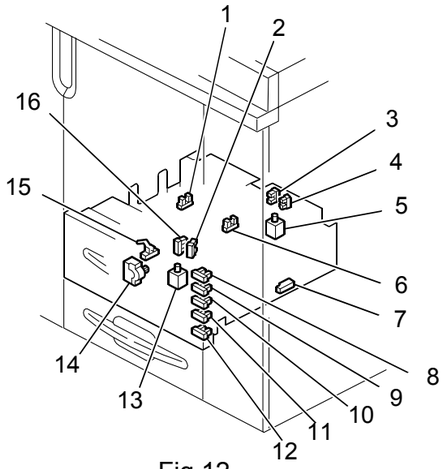

Fig.12

G178V112

D095/M077 ELECTRICAL COMPONENT LAYOUT (3/5)

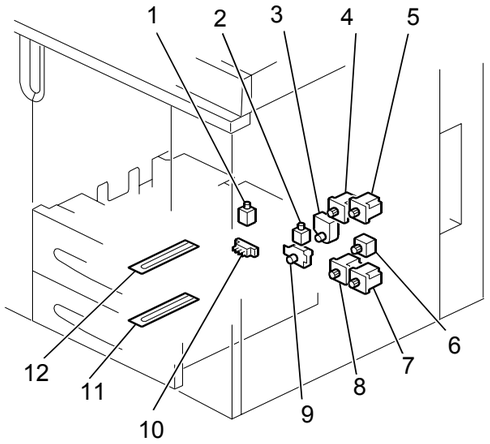

Fig.13 d095v113

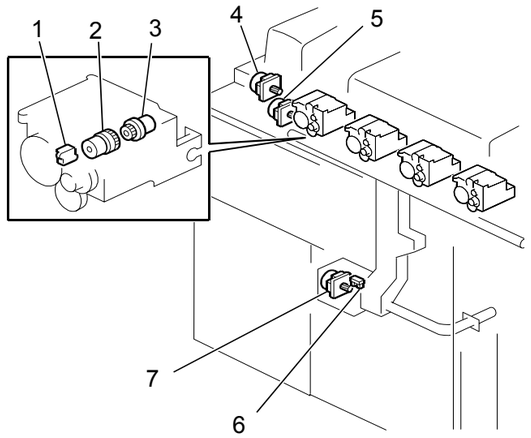

Fig.14 d095v114

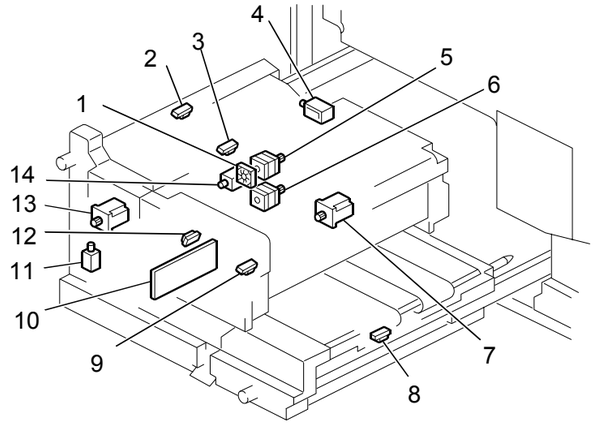

Fig.15 d095v115

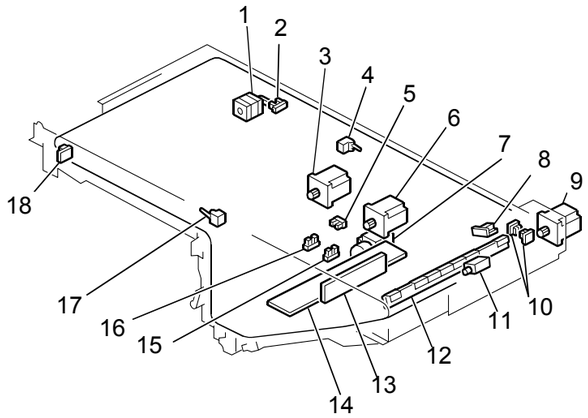

Fig.16 G178V116

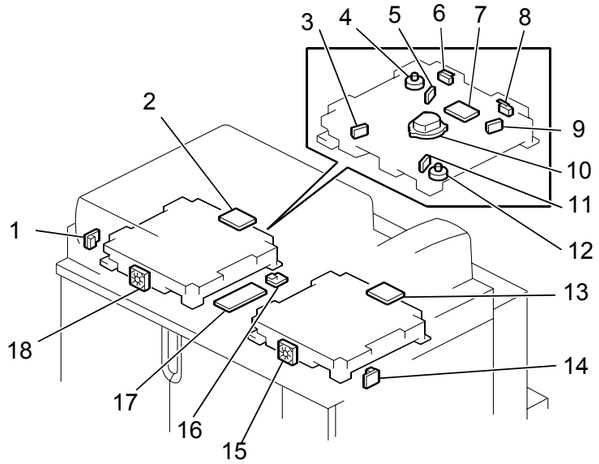

Fig.17 G178V117

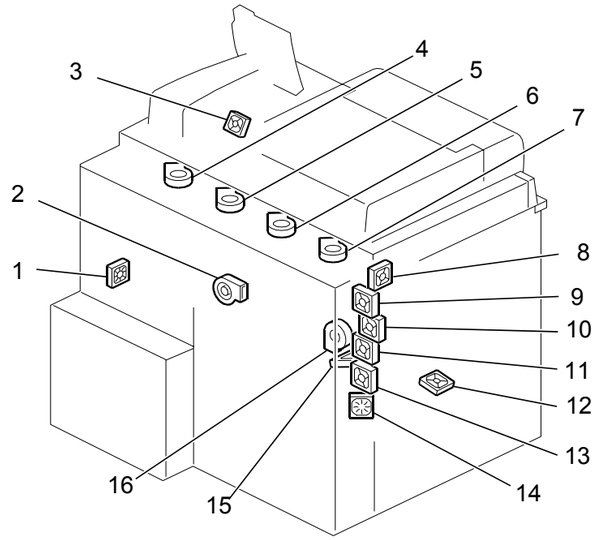

Fig.18 G178V118

D095/M077 ELECTRICAL COMPONENT LAYOUT (4/5)

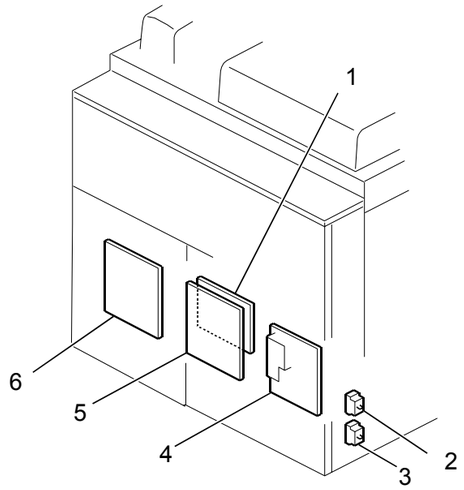

Fig.19

d095v119a

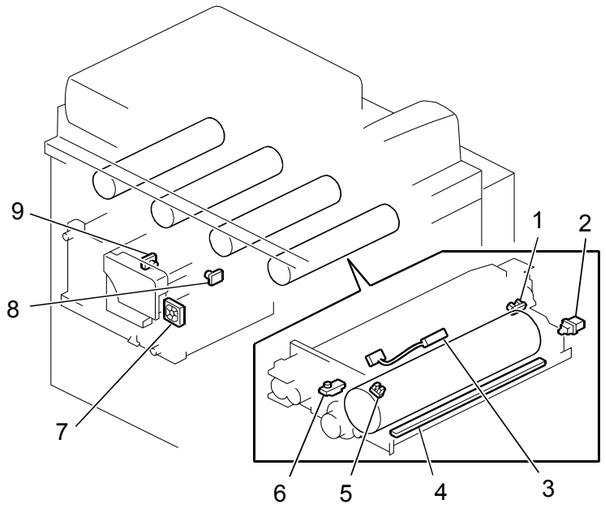

Fig.20

d095v120

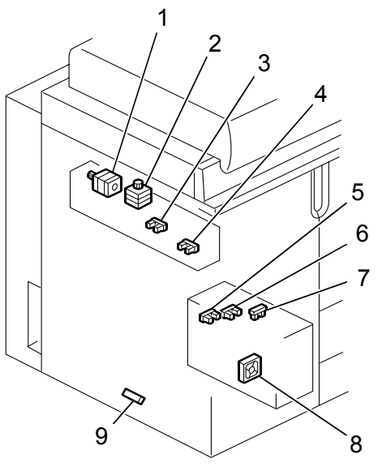

Fig.21

d095v121

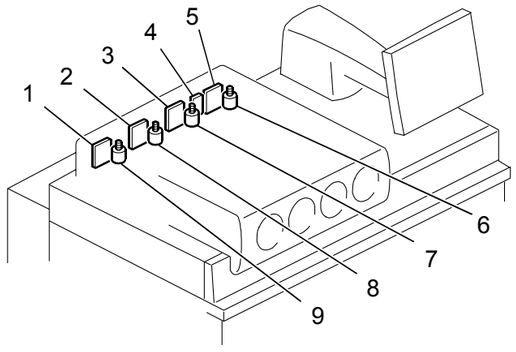

Fig.22

d095v122

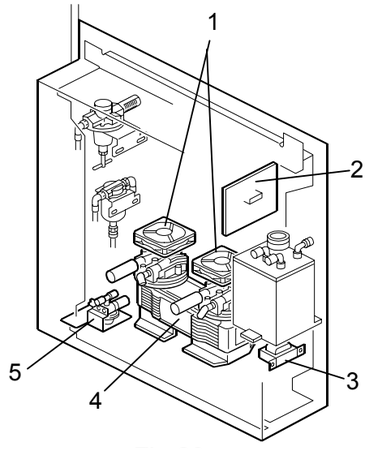

Fig.23

m390v100

Symbol	Index No.	Description	P to P
Motors			
M1	Fig.4-4	Ozone Fan-Y	1-B7
M2	Fig.4-3	Ozone Fan-M	1-B7
M3	Fig.4-2	Ozone Fan-C	1-B7
M4	Fig.4-1	Ozone Fan-K	1-C7
M5	Fig.4-5	Fusing Exhaust Fan 1	1-C5
M6	Fig.4-7	Fusing Exhaust Fan 2	1-C5
M7	Fig.4-6	Fusing Exhaust Fan 3	1-C5
M8	Fig.4-8	PSU Fan 1	1-D6
M9	Fig.4-8	PSU Fan 2	1-D6
M10	Fig.4-8	PSU Fan 3	1-D6
M11	Fig.4-13	PSU Fan 4	1-D6
M12	Fig.4-12	PSU Fan5	1-D6
M13	Fig.18-12	Paper Cooling Fan 3	2-A7
M14	Fig.18-9	Fusing Fan 1	3-B3
M15	Fig.18-10	Fusing Fan 2	3-B3
M16	Fig.18-11	Fusing Fan 3	3-C3
M17	Fig.18-8	Fusing Fan 4	3-C3
M18	Fig.18-2	Fusing Fan 5	3-D4
M19	Fig.18-16	Fusing Fan 6	3-D4
M20	Fig.18-15	Paper Cooling Fan 1	3D4
M21	Fig.18-13	Paper Cooling Fan 2	3-D4
M22	Fig.20-7	ITB FAN	3-C2
M23	Fig.18-14	Exit Fan	3-C3
M24	Fig.10-7	Fusing Motor	3-G2
M25	Fig.10-6	Paper Exit Motor	3-G3
M26	Fig.21-1	Decarler Feed Motor	3-I3
M27	Fig.21-2	Decarler Drive Motor	3-I3
M28	Fig.10-8	Pressure Roller Lift Motor	3-J2
M29	Fig.15-13	Paper Exit Transport Motor	3-I15
M30	Fig.1-17	Web Motor	2-J12
M31	Fig.2-3	PTB FAN 1	3-D16
M32	Fig.2-2	PTB FAN 2	3-E16
M33	Fig.2-4	PTB Cooling Fan	3-E15
M34	Fig.2-5	PTB Motor	3-E15
M35	Fig.15-1	Inverter Motor Fan	3-J15
M36	Fig.15-7	Duplex Transport Motor 1	3-J15
M37	Fig.15-5	Inverter Motor	3-J15
M38	Fig.15-6	Switchback Motor	3-K15
M39	Fig.16-9	ITB Drive Motor	4-C2
M40	Fig.16-1	Belt Centering Roller Motor	4-C2
M41	Fig.16-3	ITB Color Lift Motor	4-D2
M42	Fig.16-6	ITB Black Lift Motor	4-D2
M43	Fig.16-7	ITB Cleaning Motor	4-G2
M44	Fig.16-7	Waste Toner Transport Motor 2	4-C8
M45	Fig.12-14	Rear Fence Drive Motor	4-D14
M46	Fig.13-3	1st Tray Lift Motor	4-H14
M47	Fig.13-9	2nd Tray Lift Motor	4-H14
M48	Fig.13-5	1st Grip Motor	4-I14
M49	Fig.13-6	Vertical Relay Motor	4-J13
M50	Fig.13-7	2nd Grip Motor	4-J13
M51	Fig.13-4	1st Paper Feed Motor	4-J13
M52	Fig.13-8	2nd Paper Feed Motor	4-K13
M53	Fig.10-9	Development Motor Y	5-H3
M54	Fig.10-9	Development Motor M	5-H3
M55	Fig.10-9	Development Motor C	5-I3
M56	Fig.10-9	Development Motor K	5-I3
M57	Fig.18-3	Development CK Fan	5-B14
M58	Fig.18-1	Registration Fan	5-C6
M59	Fig.10-4	Charge Unit Cleaning Motor Y	5-D7
M60	Fig.10-3	Charge Unit Cleaning Motor M	5-D7
M61	Fig.10-2	Charge UnitCleaning Motor C	5-D7
M62	Fig.10-1	Charge Unit Cleaning Motor K	5-D7
M63	Fig.10-11	Drum Motor Y	5-F7

Symbol	Index No.	Description	P to P
Motors			
M64	Fig.10-11	Drum Motor M	5-F7
M65	Fig.10-11	Drum Motor C	5-G7
M66	Fig.10-11	Drum Motor K	5-G7
M67	Fig.10-10	Drum Cleaning Motor C	5-C12
M68	Fig.10-10	Drum Cleaning Moto K	5-E12
M69	Fig.10-10	Drum Cleaning Moto Y	5-F12
M70	Fig.10-10	Drum Cleaning Moto M	5-G12
M71	Fig.18-7	Development Fan Y	5-K11
M72	Fig.18-6	Development Fan M	5-K11
M73	Fig.18-5	Development Fan C	5-K11
M74	Fig.18-4	Development Fan K	5-L11
M75	Fig.22-9	Toner Bottle Motor Y	6-D3
M76	Fig.22-8	Toner Bottle Motor M	6-D3
M77	Fig.22-7	Toner Bottle Motor C	6-E3
M78	Fig.22-6	Toner Bottle Motor K	6-E3
M79	Fig.14-4	Toner Supply Motor	6-G5
M80	Fig.8-5	Registration Entrance Motor	6-B15
M81	Fig.8-4	Registration Timing Motor	6-B15
M82	Fig.7-1	Shift Roller Unit Motor	6-B15
M83	Fig.8-3	Registration Gate Motor	6-C15
M84	Fig.8-1	PTR Timing Motor	6-C15
M85	Fig.8-7	Duplex Transport Motor 2	6-D15
M86	Fig.7-10	PTR Lift Motor	6-D15
M87	Fig.8-2	Shift Roller Unit Motor	6-D15
M88	Fig.8-6	PTR Motor	6-F14
M89	Fig.7-8	CIS Fan	6-J15
M90	Fig.14-5	Waste Toner Transport Motor 1	6-G5
M91	Fig.17-10	Polygon Motor YM	7-A2
M92	Fig.17-4	BTL Adjustment Motor Y	7-B4
M93	Fig.17-12	BTL Adjustment Motor M	7-F2
M94	Fig.17-18	YM Laser Unit Fan	7-K4
M95	Fig.17-10	Polygon Motor KC	7-A14
M96	Fig.17-4	BTL Adjustment Motor C	7-B12
M97	Fig.17-12	BTL Adjustment Motor K (Not used)	7-G13
M98	Fig.17-15	CK Laser Unit Fan	7-K11
M99	-	Controller Board Fan	9-C11
M100	Fig.5-1	Controller Fan1	8-A4
M101	Fig.5-2	Controller Fan2	8-A4
M102	Fig.5-7	Controller Fan3	8-A4
M103	Fig.5-5	Controller Fan4	8-B4
M104	Fig.21-8	PTR Unit Cooling Fan	3-E2
M105	Fig.4-14	Plotter Cooling Fan 1	1-A7
M106	Fig.4-14	Plotter Cooling Fan 2	1-A7
M107	Fig.4-14	Plotter Cooling Fan 3	1-B7
Sensors			
S1	Fig.1-12	Rear Pressure Roller Lift Sensor	2-J11
S2	Fig.21-9	Switchback Lower Sensor	3-H2
S3	Fig.21-3	Decurler Unit HP Sensor	3-H2
S4	Fig.21-4	Decurler Unit Limit Sensor	3-H2
S5	Fig.1-15	Front Pressure Roller Lift Sensor	2-J11
S6	Fig.1-16	Web End Sensor	2-J11
S7	Fig.1-3	Accordion Jam Sensor	2-K11
S8	Fig.1-4	Fusing Exit Sensor: Center	2-L11
S9	Fig.2-1	PTB Jam Sensor	3-C15
S10	Fig.15-12	Switchback Sensor	3-C15
S11	Fig.15-9	Duplex Transport Sensor 1	3-D15
S12	Fig.15-8	Duplex Transport Sensor 2	3-D15
S13	Fig.15-2	Paper Exit Sensor	3-G15
S14	Fig.15-3	Exit Junction Timing Sensor	3-G15
S15	Fig.1-20	Fusing Exit Sensor: Front	2-H11
S16	Fig.16-2	Belt Centering Roller Sensor	4-E2

D095/M077 ELECTRICAL COMPONENT LAYOUT (5/5)

Symbol	Index No.	Description	P to P
Sensors			
S17	Fig.16-5	ITB Cleaning Unit Set Sensor	4-E2
S18	Fig.16-4	Belt Overrun Sensor Rear	4-E2
S19	Fig.16-10	ITB Motor Rotation Sensor 1	4-E2
S20	Fig.16-10	ITB Motor Rotation Sensor 2	4-D2
S21	Fig.16-8	Belt Centering Sensor	4-F3
S22	Fig.16-17	Belt Overrun Sensor Front	4-F2
S23	Fig.16-15	ITB Black Lift Sensor	4-F2
S24	Fig.16-16	ITB Color Lift Sensor	4-G2
S25	Fig.16-18	Belt Speed Sensor	4-G2
S26	Fig.16-12	ID/MUSIC Sensors	4-H5
S27	Fig.21-7	Waste Toner Bottle Set Sensor	4-A7
S28	Fig.21-6	Waste Toner Bottle Full Sensor	4-A7
S29	Fig.21-5	Waste Toner Bottle Near-Full Sensor	4-B7
S30	Fig.14-6	Waste Toner Transport Motor 2 Sensor	4-C8
S31	Fig.12-2	Front Side Fence Open Sensor	4-A14
S32	Fig.12-16	Front Side Fence Close Sensor	4-A14
S33	Fig.12-4	Rear Side Fence Open Sensor	4-B14
S34	Fig.12-3	Rear Side Fence Close Sensor	4-B14
S35	Fig.12-7	Right Tray 1 Paper Sensor	4-B14
S36	Fig.12-11	Paper Height Sensor 4	4-C15
S37	Fig.12-10	Paper Height Sensor 3	4-C15
S38	Fig.12-9	Paper Height Sensor 2	4-C15
S39	Fig.12-8	Paper Height Sensor 1	4-C15
S40	Fig.12-12	Lower Limit Sensor	4-C15
S41	Fig.12-1	Rear Fence HP Sensor	4-D14
S42	Fig.12-6	Rear Fence Return Sensor	4-D14
S43	Fig.12-15	Left Tray Paper Sensor	4-D14
S44	Fig.11-1	Paper Feed Sensor 1	4-E14
S45	Fig.11-2	Paper End Sensor 1	4-E14
S46	Fig.11-4	Tray Lift Sensor 1	4-E14
S47	Fig.11-3	Vertical Transport Sensor 1	4-F14
S48	Fig.11-1	Paper Feed Sensor 2	4-F13
S49	Fig.11-2	Paper End Sensor 2	4-G13
S50	Fig.11-4	Tray Lift Sensor 2	4-G13
S51	Fig.11-3	Vertical Transport Sensor 2	4-G13
S52	Fig.17-1	Temperature/Humidity Sensor Y	5-A2
S53	Fig.9-8	Temperature/Humidity Sensor: Rear Top Right	5-B2
S54	Fig.17-14	Temperature/Humidity Sensor K	5-B2
S55	Fig.20-1	Development Roller Rotation Sensor C	5-C2
S56	Fig.20-6	TD Sensor C	5-C2
S57	Fig.20-1	Development Roller Rotation Sensor K	5-D2
S58	Fig.20-6	TD Sensor K	5-D2
S59	Fig.20-1	Development Roller Rotation Sensor Y	5-E2
S60	Fig.20-6	TD Sensor Y	5-F2
S61	Fig.20-1	Development Roller Rotation Sensor M	5-F2
S62	Fig.20-6	TD Sensor M	5-G2
S63	Fig.10-12	Drum Rotation Sensor Y-1	5-J3
S64	Fig.10-12	Drum Rotation Sensor Y-2	5-J3
S65	Fig.10-12	Drum Rotation Sensor M-1	5-J3
S66	Fig.10-12	Drum Rotation Sensor M-2	5-K3
S67	Fig.10-12	Drum Rotation Sensor C-1	5-K3
S68	Fig.10-12	Drum Rotation Sensor C-2	5-K3
S69	Fig.10-12	Drum Rotation Sensor K-1	5-K3
S70	Fig.10-12	Drum Rotation Sensor K-2	5-L3
S71	Fig.17-16	Temperature/Humidity Sensor: Laser Unit	5-A12
S72	Fig.20-3	Drum Potential Sensor Y	5-A16
S73	Fig.20-3	Drum Potential Sensor M	5-B16
S74	Fig.20-3	Drum Potential Sensor C	5-B16
S75	Fig.20-3	Drum Potential Sensor K	5-C16
S76	Fig.20-5	Charge Cleaning Unit HP Sensor Y	5-B12
S77	Fig.20-5	Charge Cleaning Unit HP Sensor M	5-B12
S78	Fig.20-5	Charge Cleaning Unit HP Sensor C	5-C12
S79	Fig.20-5	Charge Cleaning Unit HP Sensor K	5-C12

Symbol	Index No.	Description	P to P
Sensors			
S80	Fig.14-1	Toner End Sensor Y	6-B5
S81	Fig.14-1	Toner End Sensor M	6-B5
S82	Fig.14-1	Toner End Sensor C	6-B5
S83	Fig.14-1	Toner End Sensor K	6-B5
S84	Fig.6-4	Registration Entrance Sensor	6-B9
S85	Fig.6-3	LCT Entrance Sensor	6-B9
S86	Fig.6-1	Registration Timing Sensor	6-G15
S87	Fig.6-8	PTR Timing Sensor	6-G15
S88	Fig.7-3	Registration Gate Lift Sensor	6-G15
S89	Fig.6-2b	Double-feed Sensor (Reception)	6-H15
S90	Fig.7-2	Shift Roller HP Sensor	6-H15
S91	Fig.7-9	PTR Lift Sensor	6-I15
S92	Fig.6-7	Duplex Transport Sensor 3	6-I15
S93	Fig.6-6	Duplex Transport Sensor 4	6-I15
S94	Fig.17-5	Laser Synchronizing Detector Y: LE	7-F3
S95	Fig.17-3	Laser Synchronizing Detector Y: TE	7-F3
S96	Fig.17-11	Laser Synchronizing Detector M: LE	7-K2
S97	Fig.17-9	Laser Synchronizing Detector M: TE	7-K2
S98	Fig.17-5	Laser Synchronizing Detector C: LE	7-F13
S99	Fig.17-3	Laser Synchronizing Detector C: TE	7-F13
S100	Fig.17-11	Laser Synchronizing Detector K: LE	7-J13
S101	Fig.1-6	Fusing Exit Sensor: Rear	2-H11
PCBs			
PCB1	Fig.4-9	PSU-EB	1-E4
PCB2	Fig.4-10	PSU-EA1	1-H4
PCB3	Fig.4-11	PSU-EA2	1-J4
PCB4	Fig.19-6	IOB 1	1-B11 5-K7 6-I8
PCB5	Fig.19-5	IOB 2	1-C14 2-B2 3-E6 4-K10 8-B2
PCB6	Fig.9-3	Relay Board	1-J10 3-F8 4-D8
PCB7	Fig.9-2	FIB	2-D6
PCB8	Fig.19-4	AC Drive Board	2-F6
PCB9	Fig.9-1	PSU-G	2-E11
PCB10	Fig.15-10	PDB1	3-K11
PCB11	Fig.17-17	Potential Sensor Board	5-A15
PCB12	Fig.22-4	RFID CPU	6-G3
PCB13	Fig.22-5	RFID K	6-H3
PCB14	Fig.22-3	RFID C	6-I3
PCB15	Fig.22-2	RFID M	6-K3
PCB16	Fig.22-1	RFID Y	6-K5
PCB17	Fig.7-4	RCB	6-I11
PCB18	Fig.7-7	CIS Relay Board	6-I14
PCB19	Fig.17-7	Polygon Motor Drive Board YM	7-B3
PCB20	-	LDB Y	7-B2
PCB21	-	LDB M	7-G2
PCB22	Fig.17-2	OPI YM	7-J5
PCB23	Fig.17-13	OPI CK	7-J10
PCB24	Fig.5-3	IPU	7-C8 8JI7
PCB25	Fig.17-7	Polygon Motor Drive Board CK	7-B12
PCB26	-	LDB C	7-B13
PCB27	-	LDB K	7-G13
PCB28	Fig.19-1	BCU	8-C2
PCB29	Fig.5-4	PSU-C	8-J5
PCB30	Fig.3-2	OPU	8-D12
PCB31	Fig.5-9	GW Controller	9-J8
PCB32	Fig.5-8	GigaEthernet Board	9-B7
PCB33	Fig.16-13	TRB	4-C5

Symbol	Index No.	Description	P to P
Switches			
SW1	Fig.3-13	Main Switch	1-I2
SW2	Fig.3-6/7	Front Door SW - R	2-A9
SW3	Fig.3-11/12	Front Door SW - L	2-A8
Symbol	**Index No.**	**Description**	**P to P**
Switches			
SW4	Fig.3-10	Front Left Door Open Switch	2-B9
SW5	Fig.3-14/15	Upper Front Cover SW -L	2-A11
SW6	Fig.3-4/5	Upper Front Cover SW -R	2-A12
SW7	Fig.13-10	Paper Size Switch	4-I13
SW8	Fig.20-2	Drum Cleaning Unit Set SW C	5-D12
SW9	Fig.20-2	Drum Cleaning Unit Set SW K	5-E12
SW10	Fig.20-2	Drum Cleaning Unit Set SW Y	5-F12
SW11	Fig.20-2	Drum Cleaning UnitSet SW M	5-G12
SW12	Fig.3-1	Toner Hopper Door Switch	6-D4
SW13	Fig.17-6/8	Laser Unit MY Cover Switch	7-J4
SW14	Fig.17-6/8	Laser Unit CK Cover Switch	7-J12
Solenoids			
SOL1	Fig.15-14	Inverter Roller Solenoid	3-G15
SOL2	Fig.15-11	Switchback Junction Gate Solenoid	3-F14
SOL3	Fig.15-4	Exit Junction Gate Solenoid	3-F15
SOL4	Fig.16-11	ID Sensor Shutter Solenoid	4-D2
SOL5	Fig.12-13	Front Side Fence Solenoid	4-B14
SOL6	Fig.12-5	Rear Side Fence Solenoid	4-B14
SOL7	Fig.11-5	Pick-up Solenoid 1	4-F14
SOL8	Fig.11-6	Separation Roller Solenoid 1	4-F14
SOL9	Fig.11-5	Pick-up Solenoid 2	4-G14
SOL10	Fig.11-6	Separation Roller Solenoid 2	4-G14
SOL11	Fig.13-1	Left Tray Lock Solenoid	4-H14
SOL12	Fig.13-2	Tandem Tray Connect Solenoid	4-H14
SOL13	Fig.7-6	Registration Entrance Solenoid	6-E15
SOL14	Fig.7-5	LCT Entrance Solenoid	6-E15
Thermostats			
TS1	Fig.1-10	Thermostat 1	2-F11
TS2	Fig.1-11	Thermostat 2	2-F11
TS3	Fig.1-13	Thermostat 3	2-E11
TS4	Fig.1-2	Thermostat 4	2-E11
TS5	Fig.1-5	Thermostat 5	2-E12
Lamps			
L1	Fig.1-7	Fusing Lamp 1	2-F12
L2	Fig.1-8	Fusing Lamp 2	2-G12
L3	Fig.1-9	Fusing Lamp 3	2-G12
L4	Fig.1-18	Fusing Lamp 4	2-G12
HVPSes			
HVPS1	Fig.16-14	Image Transfer HVPS	4-I5
HVPS2	Fig.9-4	CGB HVPS-Y	5-G14
HVPS3	Fig.9-5	CGB HVPS-M	5-H14
HVPS4	Fig.9-7	CGB HVPS-C	5-I14
HVPS5	Fig.9-6	CGB HVPS-K	5-K14
HVPS6	Fig.7-11	Separation HVPS	6-F15
Clutches			
MC1	Fig.14-2	Toner Supply Clutch K	6-B2
MC2	Fig.14-2	Toner Supply Clutch C	6-B2
MC3	Fig.14-2	Toner Supply Clutch M	6-B2
MC4	Fig.14-2	Toner Supply Clutch Y	6-B3
MC5	Fig.14-3	Toner Pump Clutch K	6-B3
MC6	Fig.14-3	Toner Pump Clutch C	6-B3
MC7	Fig.14-3	Toner Pump Clutch M	6-B3
MC8	Fig.14-3	Toner Pump Clutch Y	6-B4
LEDs			
LED1	Fig.20-4	Quenching Lamp Y	5-F2
LED2	Fig.20-4	Quenching Lamp M	5-G2
LED3	Fig.20-4	Quenching Lamp C	5-C2
LED4	Fig.20-4	Quenching Lamp K	5-E2
Counters			
C1	Fig.3-9	Mechanical Counter 1	2-A7
C2	Fig.3-8	Mechanical Counter 2	2-A7

Symbol	Index No.	Description	P to P
Others			
CB1	Fig.19-3	Braker 2	1-G2
CB2	Fig.19-2	Braker 1	1-F2
TP1	Fig.20-8	Heation Roller Thermopile	3-D2
TP2	Fig.20-9	Pressure Roller Thermopile	3-H15
TH1	Fig.1-14	Heating Roller Thermistor	2-J11
TH2	Fig.1-1	Fusing Belt Thermistor	2-J11
TH3	Fig.1-19	Hot Roller Thermistor	2-K11
H1	Fig.13-12	Tray Heater	4-J15
H2	Fig.13-11	UVTray Heater	4-J15
CIS1	Fig.6-5	CIS	6-J16
LED5	Fig.6-2a	Double-feed Sensor (LED)	6-G15
LED6	Fig.3-3	Attention Light	8-E8
ID Chip 1	-	ID Chip K	6-H2
ID Chip 2	-	ID Chip C	6-I2
ID Chip 3	-	ID Chip M	6-K2
ID Chip 4	-	ID Chip Y	6-J5
NVRAM	-	NVRAM	9-J11
HDD1	Fig.5-6	HDD1	9-D11
HDD2	Fig.5-6	HDD2	9-E11
DIMM1	-	DIMM1	9-H11
DIMM2	-	DIMM2	9-H11
V1	Fig.10-5	Electrical Valve	-

Symbol	Index No.	Description	P to P
Air Separtor Unit (Option)			
FAN1, 2	Fig.23-1	Compressor Fan 1, 2	1-B6
-	Fig.23-2	CCB	1-A5
-	Fig.23-3	Transformer	1-B3
-	Fig.23-4	Compressor	1-B3
SOL1	Fig.23-5	Electrical Valve	1-B6

D095 LCT-MF POINT TO POINT DIAGRAM (1/4)

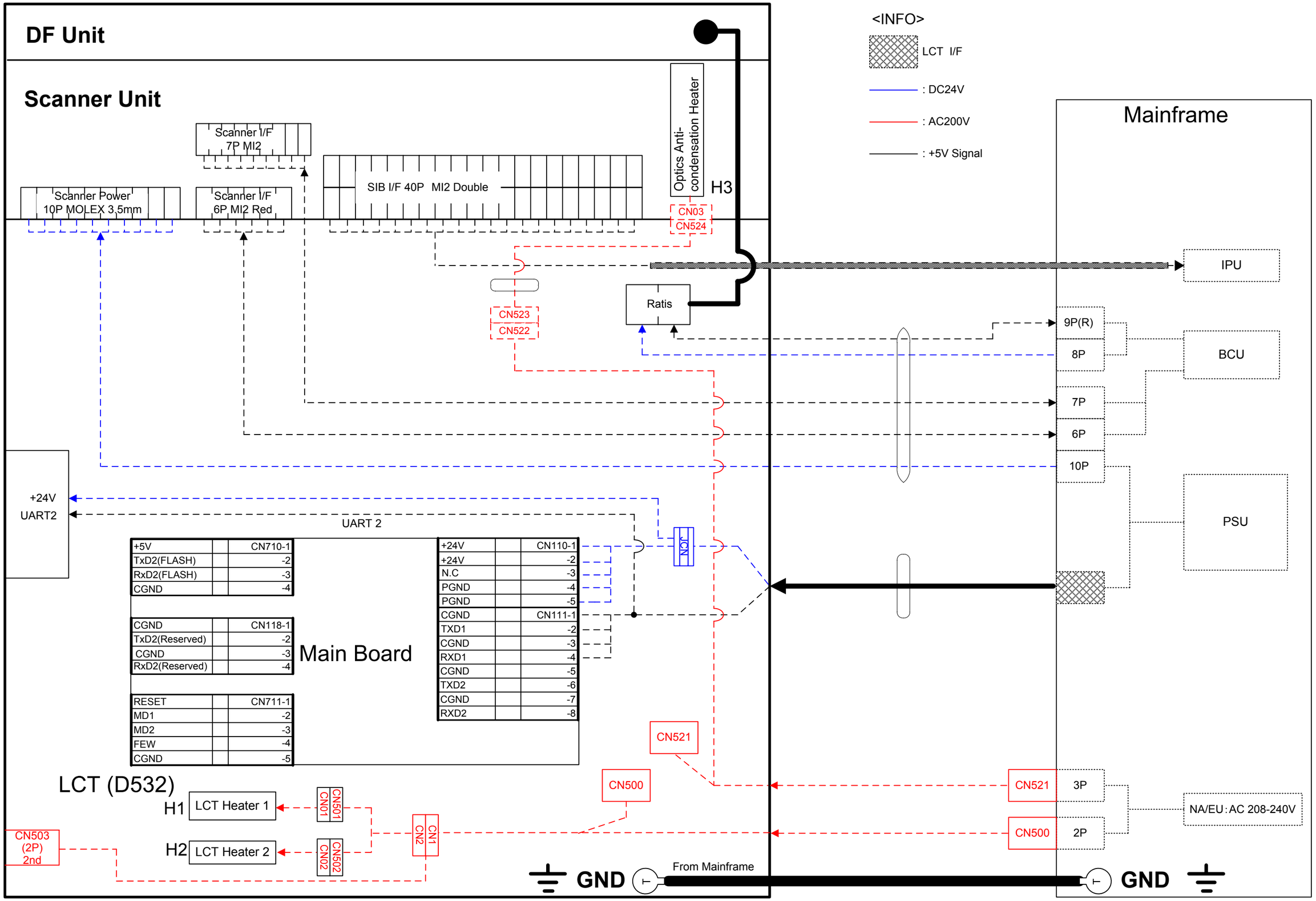

D095 LCT-MF POINT TO POINT DIAGRAM (2/4)

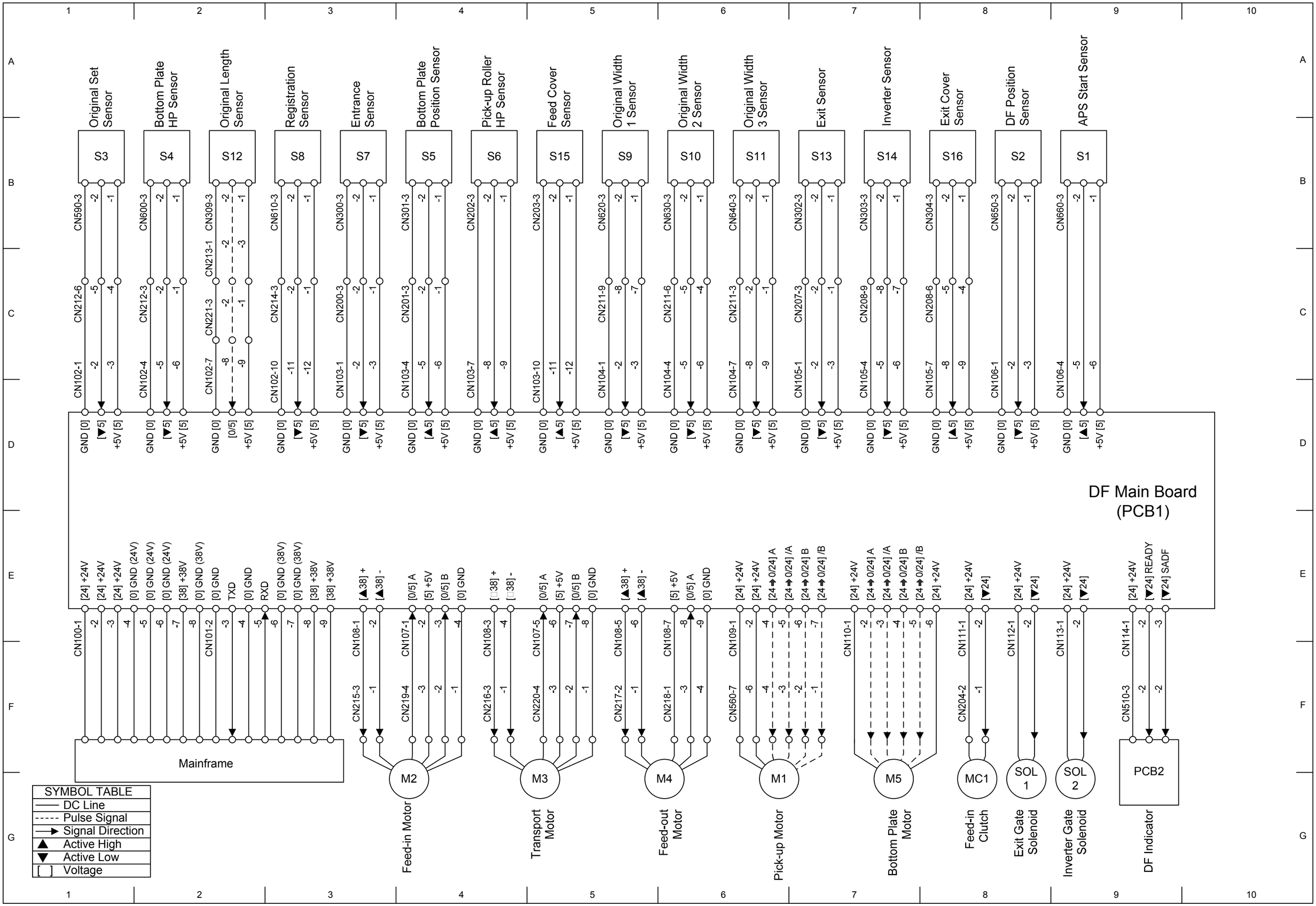

D095 LCT-MF POINT TO POINT DIAGRAM (3/4)

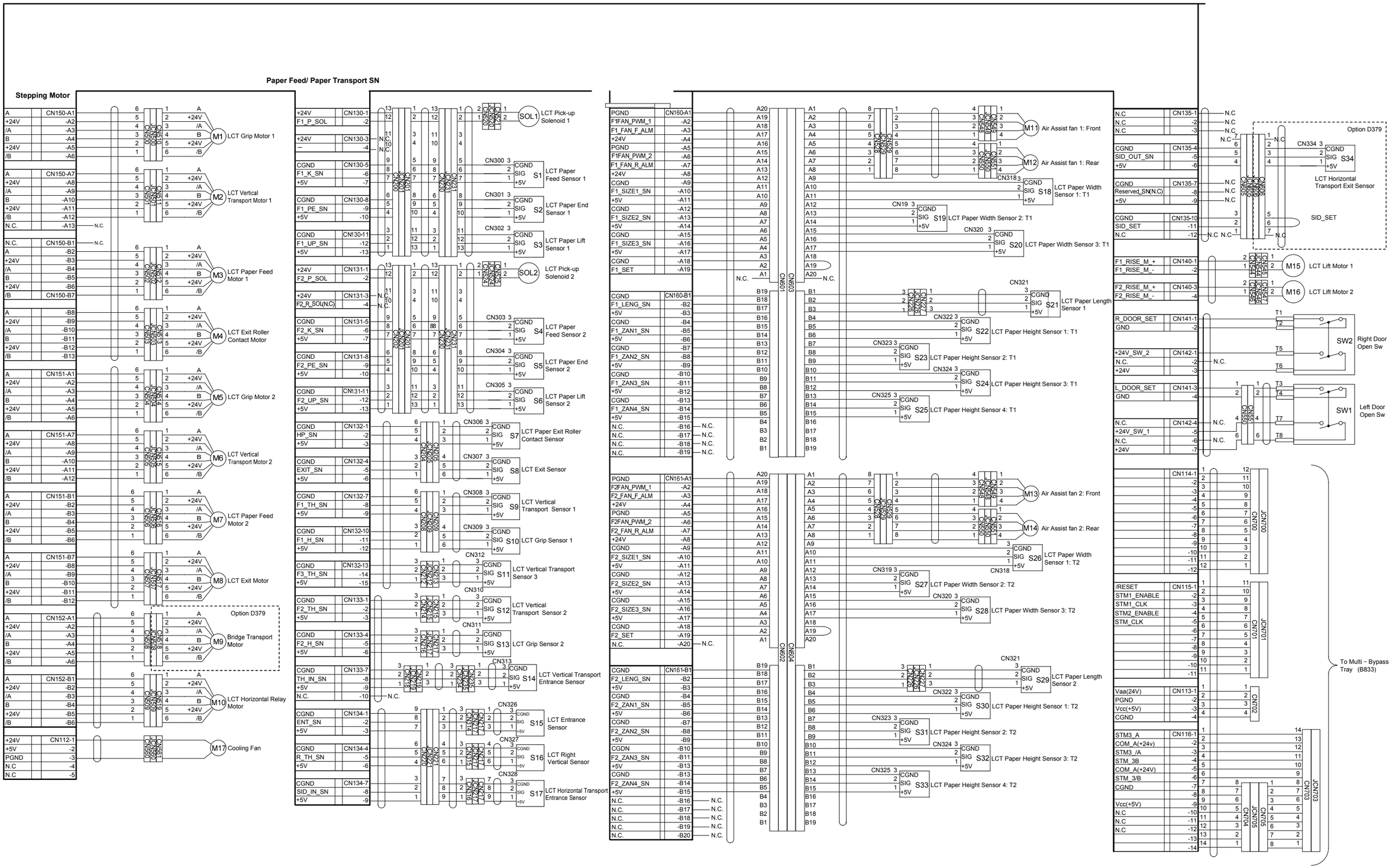

D095 LCT-MF POINT TO POINT DIAGRAM (4/4)

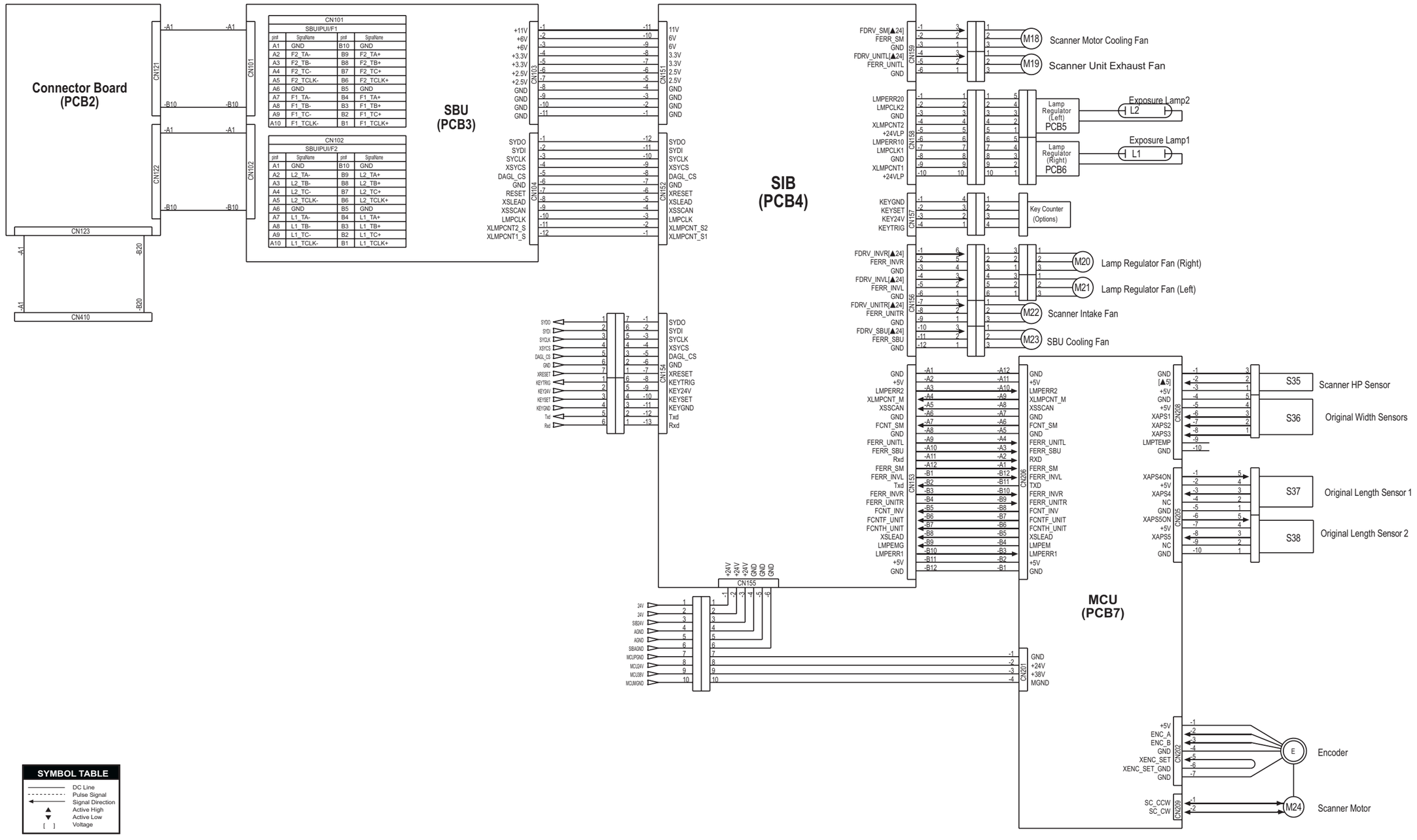

CN101 SBUIPUI/F1			
pin#	SignalName	pin#	SignalName
A1	GND	B10	GND
A2	F2_TA-	B9	F2_TA+
A3	F2_TB-	B8	F2_TB+
A4	F2_TC-	B7	F2_TC+
A5	F2_TCLK-	B6	F2_TCLK+
A6	GND	B5	GND
A7	F1_TA-	B4	F1_TA+
A8	F1_TB-	B3	F1_TB+
A9	F1_TC-	B2	F1_TC+
A10	F1_TCLK-	B1	F1_TCLK+

CN102 SBUIPUI/F2			
pin#	SignalName	pin#	SignalName
A1	GND	B10	GND
A2	L2_TA-	B9	L2_TA+
A3	L2_TB-	B8	L2_TB+
A4	L2_TC-	B7	L2_TC+
A5	L2_TCLK-	B6	L2_TCLK+
A6	GND	B5	GND
A7	L1_TA-	B4	L1_TA+
A8	L1_TB-	B3	L1_TB+
A9	L1_TC-	B2	L1_TC+
A10	L1_TCLK-	B1	L1_TCLK+

SYMBOL TABLE

———	DC Line
- - - -	Pulse Signal
←———	Signal Direction
▲	Active High
▼	Active Low
[ ]	Voltage

D095 (LCT-MF) ELECTRICAL COMPONENT LAYOUT (1/2)

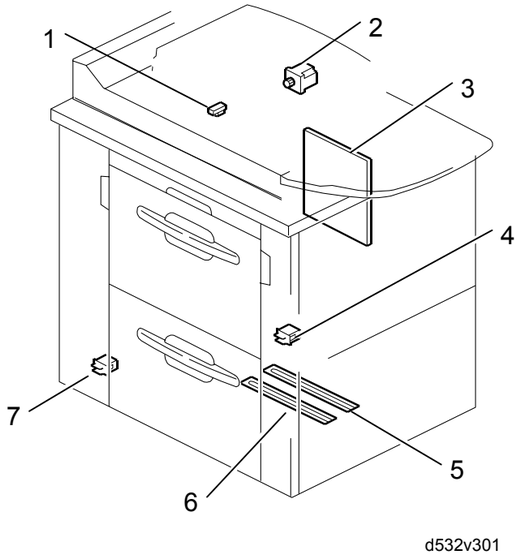

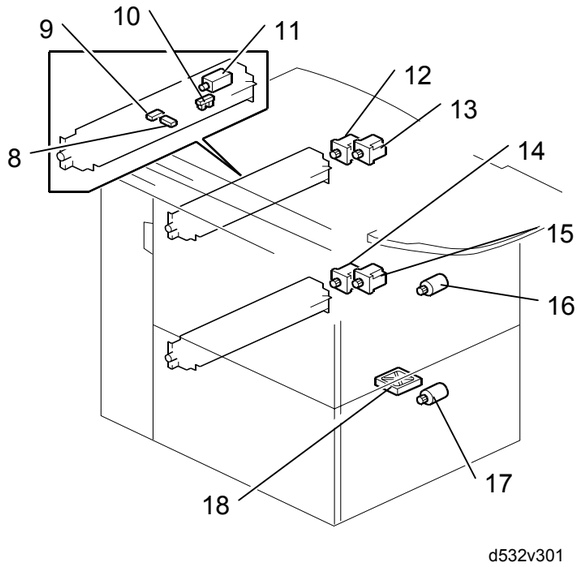

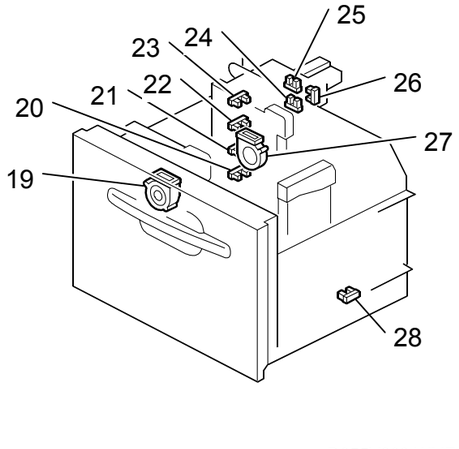

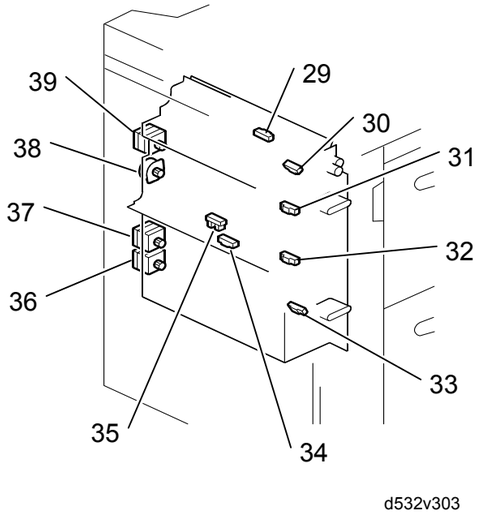

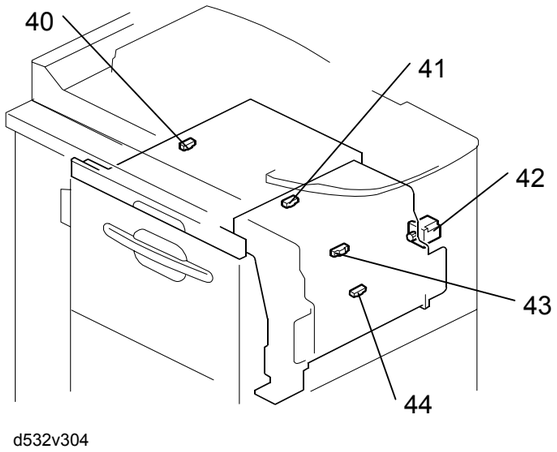

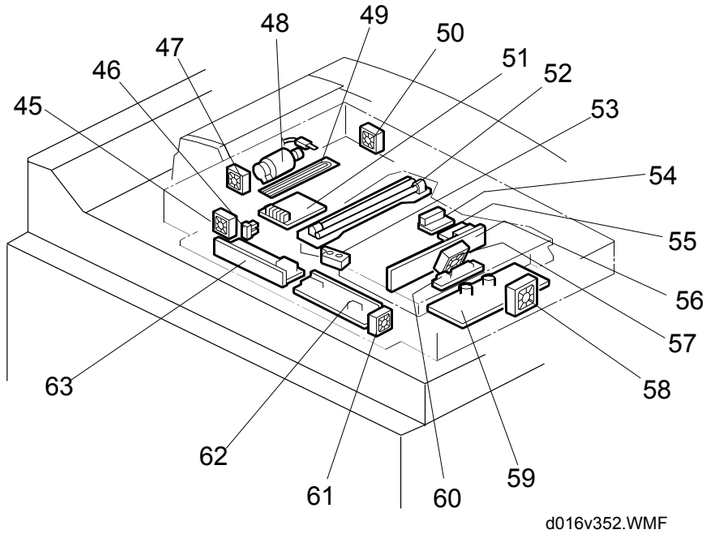

DF Unit

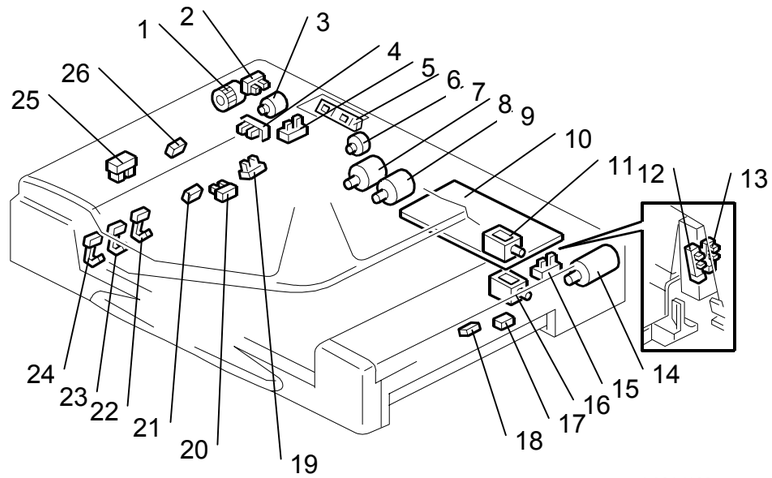

D095 (LCT-MF) ELECTRICAL COMPONENT LAYOUT (2/2)

Symbol	Index No.	Description	P to P	Page
Lamps				
L1	52	Exposure Lamp 1	A8	4/4
L2	52	Exposure Lamp 2	A8	4/4
Heaters				
H1	6	LCT Heater 1	E4	3/4
H2	5	LCT Heater 2	E4	3/4
H3	49	Optics Anti-condensation Heater	A5	4/4
PCBs				
PCB1	3	Main Board	A3	3/4
PCB2	60	Connector Board	A3	4/4
PCB3	56	SBU	A5	4/4
PCB4	59	SIB	B6	4/4
PCB5	63	Lamp Regulator (Left)	A7	4/4
PCB6	62	Lamp Regulator (Right)	A7	4/4
PCB7	51	MCU	C8	4/4
Switches				
SW1	7	Left Door Open Sw	D10	3/4
SW2	4	Right Door Open Sw	C10	3/4
Solenoids				
SOL1	11	LCT Pick-up Solenoid 1	B4	3/4
SOL2	11	LCT Pick-up Solenoid 2	C4	3/4

Symbol	Index No.	Description	P to P	Page
Motors				
M1	12	LCT Grip Motor 1	B2	3/4
M2	39	LCT Vertical Transport Motor 1	B2	3/4
M3	13	LCT Paper Feed Motor 1	C2	3/4
M4	38	LCT Exit Roller Contact Motor	C2	3/4
M5	14	LCT Grip Motor 2	D2	3/4
M6	36	LCT Vertical Transport Motor 2	D2	3/4
M7	15	LCT Paper Feed Motor 2	E2	3/4
M8	37	LCT Exit Motor	E2	3/4
M9	42	Bridge Transport Motor	E2	3/4
M10	2	LCT Horizontal Relay Motor	F2	3/4
M11	19	Air Assist fan 1: Front	B8	3/4
M12	27	Air Assist fan 1: Rear	B8	3/4
M13	19	Air Assist fan 2: Front	E8	3/4
M14	27	Air Assist fan 2: Rear	E8	3/4
M15	16	LCT Lift Motor 1	C10	3/4
M16	17	LCT Lift Motor 2	C10	3/4
M17	18	Cooling Fan	F2	3/4
M18	47	Scanner Motor Cooling Fan	A7	4/4
M19	50	Scanner Unit Exhaust Fan	A7	4/4
M20	61	Lamp Regulator Fan (Right)	B8	4/4
M21	45	Lamp Regulator Fan (Left)	B8	4/4
M22	58	Scanner Intake Fan	B7	4/4
M23	57	SBU Cooling Fan	B7	4/4
M24	48	Scanner Motor	D8	4/4

Symbol	Index No.	Description	P to P	Page
Sensors				
S1	9	LCT Paper Feed Sensor 1	B4	3/4
S2	8	LCT Paper End Sensor 1	B4	3/4
S3	10	LCT Paper Lift Sensor 1	C4	3/4
S4	9	LCT Paper Feed Sensor 2	C4	3/4
S5	8	LCT Paper End Sensor 2	C4	3/4
S6	10	LCT Paper Lift Sensor 2	D4	3/4
S7	35	LCT Paper Exit Roller Contact Sensor	D4	3/4
S8	34	LCT Exit Sensor	D4	3/4
S9	31	LCT Vertical Transport Sensor 1	E4	3/4
S10	30	LCT Grip Sensor 1	E4	3/4
S11	1	LCT Vertical Transport Sensor 3	E4	3/4
S12	32	LCT Vertical Transport Sensor 2	E4	3/4
S13	33	LCT Grip Sensor 2	E4	3/4
S14	29	LCT Vertical Transport Entrance Sensor	F4	3/4
S15	43	LCT Entrance Sensor	F4	3/4
S16	44	LCT Right Vertical Sensor	F4	3/4
S17	41	LCT Horizontal Transport Entrance Sensor	G4	3/4
S18	24	LCT Paper Width Sensor 1: T1	B8	3/4
S19	26	LCT Paper Width Sensor 2: T1	C7	3/4
S20	25	LCT Paper Width Sensor 3: T1	C8	3/4
S21	28	LCT Paper Length Sensor 1	C8	3/4
S22	20	LCT Paper Height Sensor 1: T1	C7	3/4
S23	21	LCT Paper Height Sensor 2: T1	D7	3/4
S24	22	LCT Paper Height Sensor 3: T1	D7	3/4
S25	23	LCT Paper Height Sensor 4: T1	D7	3/4
S26	24	LCT Paper Width Sensor 1: T2	E8	3/4
S27	26	LCT Paper Width Sensor 2: T2	E7	3/4
S28	25	LCT Paper Width Sensor 3: T2	E7	3/4
S29	28	LCT Paper Length Sensor 2	F8	3/4
S30	20	LCT Paper Height Sensor 1: T2	F7	3/4
S31	21	LCT Paper Height Sensor 2: T2	F7	3/4
S32	22	LCT Paper Height Sensor 3: T2	F7	3/4
S33	23	LCT Paper Height Sensor 4: T2	F7	3/4
S34	40	LCT Horizontal Transport Exit Sensor	B10	3/4
S35	46	Scanner HP Sensor	B8	4/4
S36	53	Original Width Sensors	C8	4/4
S37	54	Original Length Sensor 1	C8	4/4
S38	55	Original Length Sensor 2	C8	4/4

DF Unit

Symbol	Index No.	Description	P to P	Page
Motors				
M1	3	Pick-up	2-G6	2/4
M2	8	Feed-in	2-G4	2/4
M3	9	Transport	2-G5	2/4
M4	14	Feed-out	2-G6	2/4
M5	7	Bottom plate	2-G7	2/4
Sensors				
S1	12	APS Start	2-B9	2/4
S2	13	DF Position	2-B8	2/4
S3	19	Original Set	2-B1	2/4
S4	20	Bottom Plate HP	2-B2	2/4
S5	4	Bottom Plate Position	2-B4	2/4
S6	2	Pick-up Roller HP	2-B4	2/4
S7	26	Entrance	2-B3	2/4
S8	21	Registration	2-B3	2/4
S9	22	Original Width 1	2-B5	2/4
S10	23	Original Width 2	2-B6	2/4
S11	24	Original Width 3	2-B6	2/4
S12	25	Original Length	2-B2	2/4
S13	18	Exit	2-B7	2/4
S14	17	Inverter	2-B7	2/4
S15	5	Feed Cover	2-B5	2/4
S16	15	Exit Cover	2-B8	2/4
Solenoids				
SOL1	16	Exit Gate	2-G8	2/4
SOL2	11	Inverter Gate	2-G9	2/4
Magnetic Clutches				
MC1	1	Feed-in	2-G8	2/4
PCBs				
PCB1	10	DF Main	2-D9	2/4
PCB2	6	DF Indicator	2-G9	2/4