D120/D121/D122/ D139/D140/D141 Point to Point Diagram 1/2

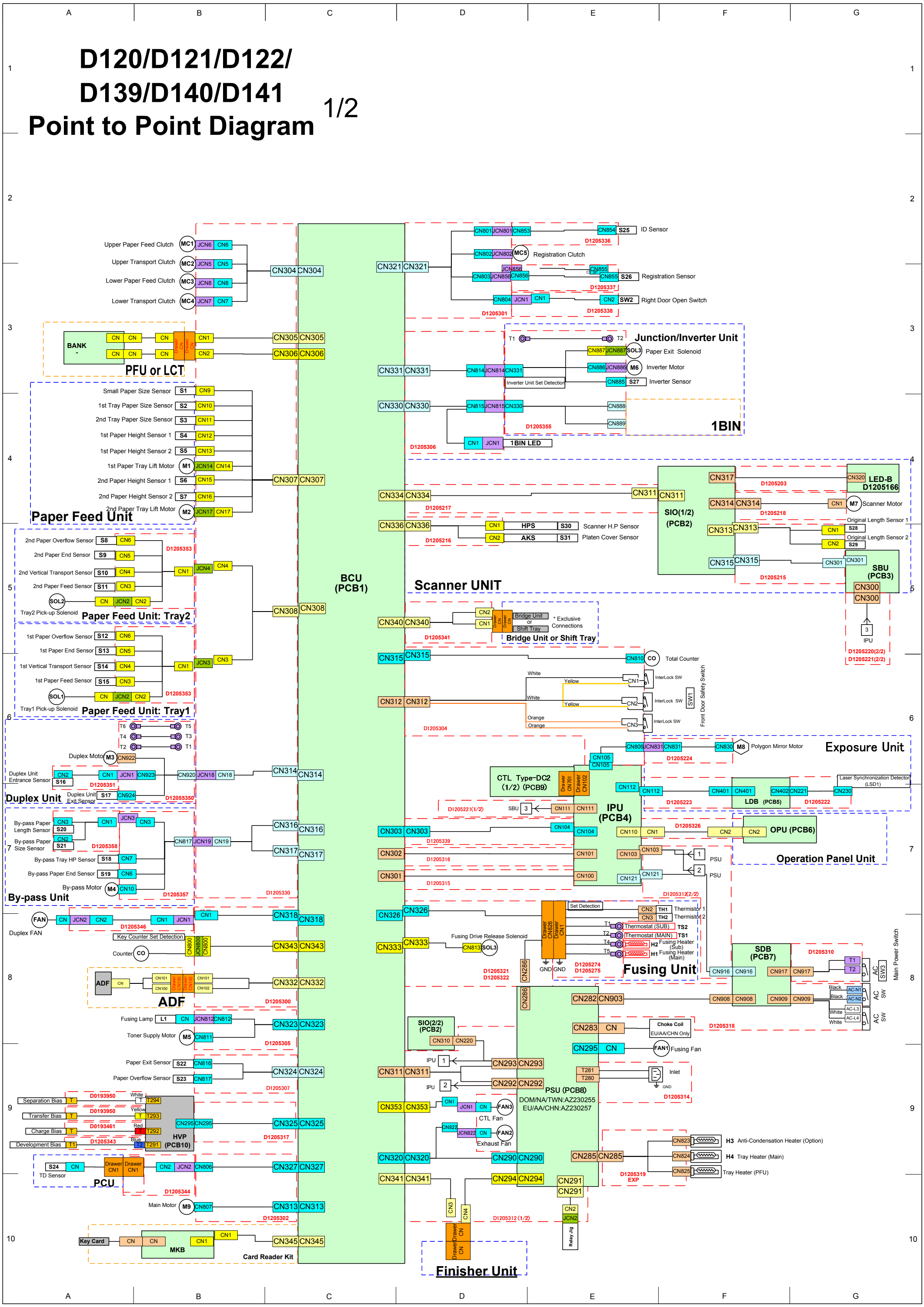

D120/D121/D122/ D139/D140/D141 Point to Point Diagram

2/2
CTL

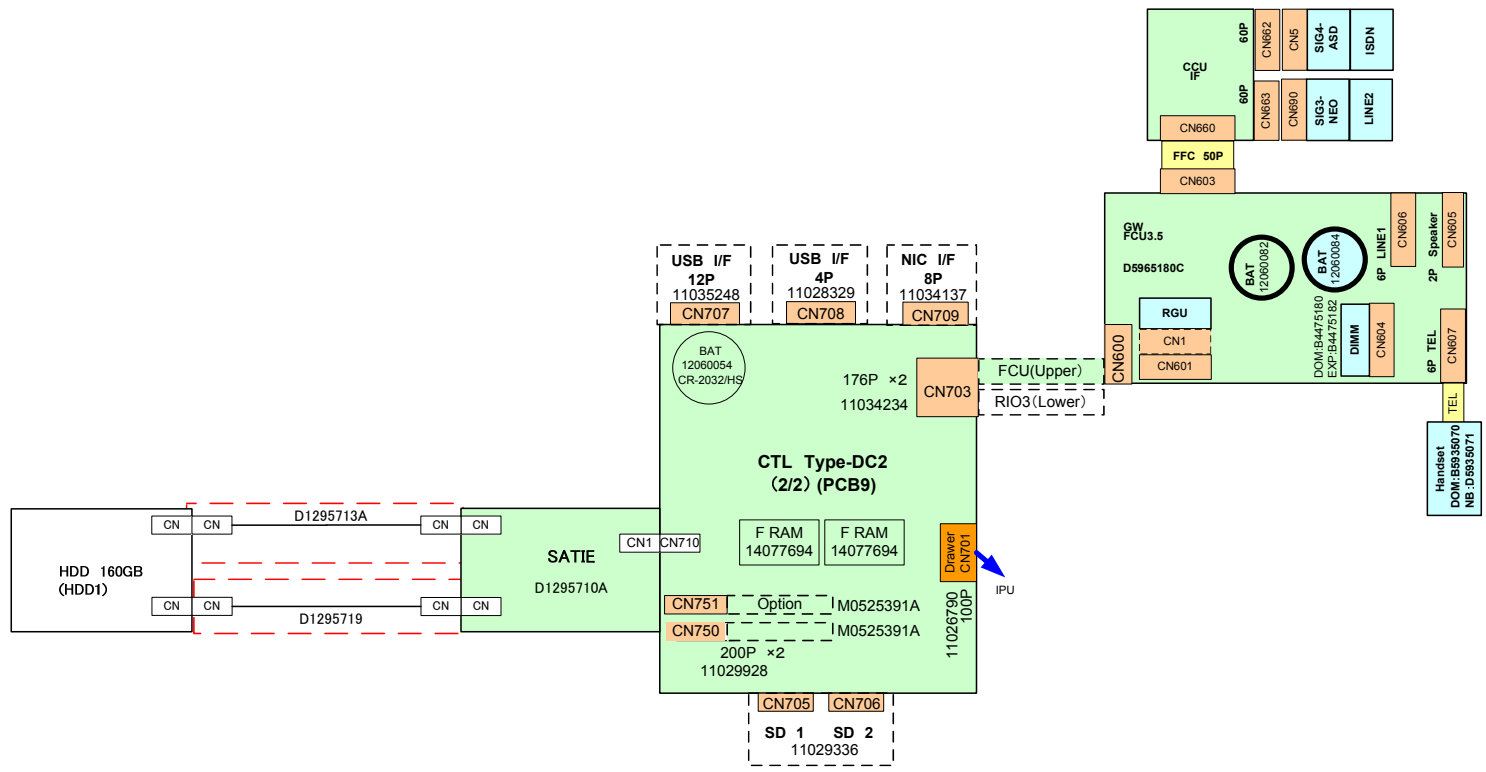

D120/D121/D122/D139/D140/D141 Pin Assignment Lists (1/3)

Harness No.	P/N	CN (FROM) From	CN (FROM) No.	CN (FROM) Pin No.	Signal Information Signal	Direction	L	H	Relay Harness P/N	CN (To) Pin No.	CN (To) No.	CN (To) To
1	D1205300	BCU	CN332	A1	ARDF:+5VE	P			-	8	CN101	ARDF
				A2	ARDF:UART RX	←				7		
				A3	ARDF:Original Set Detection	←				6		
				A4	ARDF:UART TX	→				5		
				A5	ADF Scan Gate	←				4		
				A6	ARDF:+5V	P				3		
				A7	ARDF:GND	G				2		
				A8	ARDF:ACS Mask	←				1		
				B1	ARDF:GND	G				9	CN102	
				B2	ARDF:GND	G				8		
				B3	ARDF:GND	G				7		
				B4	ARDF:GND	G				6		
				B5	ARDF:+24V	P				5		
				B6	ARDF:+24V	P				4		
				B7	ARDF:+24V	P				3		
				B8	ARDF:+24V	P				2		
					N.C	-				1		
			CN343	1	Key Counter:GND	G				4	CN800	Key Counter
				2	Key Counter:Set Detect	←	Set	Not Set		3		
				3	Key Counter:+24V	P				2		
				4	Key Counter:On	→	OFF	ON		1		
			CN318	1	Duplex Fan	→	OFF	ON	D1205346	3	CN1	Duplex Fan
				2	Duplex Fan: Lock Detect	←	Normal	Error		2		
				3	GND	G				1		
2	D1205301	BCU	CN321	1	ID Sensor:+5V	P			D1205336	4	CN801	ID Sensor
				2	ID Sensor:GND	G				3		
				3	ID Sensor:PWM	→				2		
				4	ID Sensor:FB	←				1		
				5	Registration Sensor:GND	G			D1205337	3	CN803	Registration Sensor
				6	Registration Sensor:Detection	←	Paper	No Paper		2		
				7	Registration Sensor:+5V	P				1		
				8	Door SW:GND	G			D1205338	2	CN804	Door SW
				9	Door SW:Right door open swit	←	Close	Open		1		
				10	N.C	-			-	-	-	-
				11	Registration Clutch:+24V	P				2	CN802	Registration Clutch
				12	Registration Clutch:Control	→	ON	OFF		1		
3	D1205302	BCU	CN313	1	Main Motor:Gain	→	Hi	Low	-	12	CN807	Main Motor
				2	Main Motor:CLK	→				11		
				3	Main Motor:Brake	→	ON	OFF		10		
				4	Main Motor:FW/REV	→	CCW	CW		9		
				5	Main Motor:ON	→	Start	Stop		8		
				6	Main Motor:LOCK	←	Normal	Error (Lock)		7		
				7	Main Motor:+5V	P				6		
				8	Main Motor:GND	G				5		
				9	Main Motor:GND	G				4		
				10	Main Motor:GND	G				3		
				11	Main Motor:+24V	P				2		
				12	Main Motor:+24V	P				1		
			CN327	1	PCU:Set Detect	←	Not Set	Set	D1205344	4	CN806	PCU
				2	PCU:GND	G				3		
				3	PCU:TD Sensor:FB	←				2		
				4	PCU:+5V	P				1		
				5	N.C	-				-	-	-
				6	N.C	-				-	-	-
				7	N.C	-				-	-	-
4	D1205304	BCU	CN312	1	Interlock SW:+5VS/Front Door C	←	Close	Open	-	2	CN2	Interlock SW
				2	Interlock SW:+5V	P				2	CN1	
				3	Interlock SW:+24VS/Front Door	←	Open	Close		1	CN3	
				4	Interlock SW:+24V	P				2		
		Interlock SW	CN1	1	Interlock SW:+5VS	→				1	CN2	
		BCU	CN315	1	Mechanical Counter:+24V	P				2	CN810	
				2	Mechanical Counter:Control	→	OFF	ON		1		
		IPU	CN105	1	Polygon MT:24V	PO			D12053224	5	CN809	Polygon Motor
				2	Polygon MT:GND	G				4		
				3	Polygon MT:Start	O	Start			3		
				4	Polygon MT:Synchronization	←	Synchronization			2		
				5	Polygon MT:CLK	O				1		
5	D1205305	BCU	CN323	1	Quenching lamp:+24V	P			-	2	CN812	Quenching Lamp
				2	Quenching lamp:ON	→				1		
				3	Toner Bottle Motor:ON	→	OFF	ON		2	CN811	Bottle Motor
				4	Toner Bottle Motor:POWER	→				1		
6	D1205306	BCU	CN331	1	Junction Solenoid:+24V	P			D1205355	13	CN814	Junction Solenoid
				2	Junction Solenoid:Control	→	ON	OFF		12		
				3	Inverter Motor:Excitation:B	→				11		Inverter Motor
				4	Inverter Motor:Excitation:A	→				10		
				5	Inverter Motor:+24V	P				9		
				6	Inverter Motor:+24V	P				8		
				7	Inverter Motor:Excitation:/B	→				7		
				8	Inverter Motor:Excitation:/A	→				6		
				9	Inverter Sensor:GND	G				5		Inverter Sensor
				10	Inverter Sensor:Detection	←	Paper	No Paper		4		
				11	Inverter Sensor:+5V	P				3		
				12	Inverter UNI:GND	G				2		Unit
				13	Inverter UNI:Set Detect	←	Set	Not Set		1		
			CN330	1	1BIN:RSV	→	ON	OFF		9	CN815	1BIN
				2	1BIN:CNVY_PDET	←	Paper	No Paper		8		
				3	1BIN:TRY_PDET	←	Paper	No Paper		7		
				4	1BIN:UNIT_SET	←	Set	Not Set		6		
				5	1BIN:GND	G				5		
				6	1BIN:+5VE	P				4		
				7	1BIN:+5V	P				3		
		1BIN LED	CN1	1	1BIN:LED:CATHODE					2		
				2	1BIN:LED:ANODE					1		
7	D1205307	BCU	CN324	1	Paper Exit Sensor:GND	G			-	3	CN816	Paper Exit Sensor
				2	Paper Exit Sensor:Detect	←	Paper	No Paper		2		
				3	Paper Exit Sensor:+5V	P				1		
				4	Paper Overflow Sensor:GND	G				3	CN817	Paper Overflow Sensor
				5	Paper Overflow Sensor:Detect	←	Full	Not Detected		2		
				6	Paper Overflow Sensor:+5V	P				1		
8	D1205310	SW	T1	1	AC_SW-ON-N	O			-	1	CN917	SDB
			T2	1	GND	G				2		

Harness No.	P/N	CN (FROM) From	CN (FROM) No.	CN (FROM) Pin No.	Signal Information Signal	Direction	L	H	Relay Harness P/N	CN (To) Pin No.	CN (To) No.	CN (To) To
9	D1205312	IPU	CN121	1	SD:REON_DC_N	→	ON	OFF	-	4	CN916	SDB
				2	SD:5VE	P				3		
				3	SD:ACSWON_N_	←	ON	OFF		2		
				4	SD:GND	G				1		
			CN2	1	Relay jig:+					2	CN291	PSU
				2	Relay jig:−					1		
		BCU	CN320	1	PSU Fan	→	OFF	ON		8	CN290	PSU
				2	Heater ON	→	OFF(Heater ON)	ON(Heater OFF)		7		
				3	Zero Cross Signal	←	Detected	Not Detected		6		
				4	Fusing Heater (Main) Trigger	→	OFF	ON		5		
				5	Fusing Heater (Sub) Trigger	→	OFF	ON		4		
				6	RELAY-TRG ON	→	OFF	ON		3		
				7	24V	P				2		
				8	GND	G				1		
				9	Exhaust Fan	→	OFF	ON		3	CN822	Exhaust Fan
				10	Exhaust Fan:Lock Detect	←	Normal	Error		2		
				11	Exhaust Fan:GND	G				1		
		BCU	CN353	1	CTL Fan:Fan	→	OFF	ON		3	CN1	CTL Fan
				2	CTL Fan:Lock Detect	←	Normal	Error		2		
				3	CTL Fan:GND	G				1		
		IPU	CN103	1	IPU:PONENG_N_:Power Control	→	ON	OFF		6	CN293	PSU
				2	IPU:GND	G				1	CN292	
				3	IPU:24V	PI				10	CN293	
				4	IPU:GND	G				2	CN292	
				5	IPU:5V	PI				12	CN293	
				6	IPU:GND	G				4	CN293	
				7	IPU:5VE	PI				4	CN292	
				8	IPU:5VE	PI				5	CN292	
		BCU	CN311	1	BCU:24V	P				7	CN293	
				2	BCU:24V	P				9	CN293	
				3	BCU:GND	G				3	CN292	
				4	BCU:GND	G				1	CN293	
				5	BCU:GND	G				2	CN293	
				6	BCU:5V	P				11	CN293	
				7	BCU:5VE	P				6	CN292	
		SIO	CN220	1	SIO:24V	P				8	CN293	
				2	SIO:GND	G				3	CN293	
					N.C.	−				5	CN293	
					N.C.	−				8	CN3	FIN
		BCU	CN341	1	FIN:RXD	←				7		
				2	N.C.	−				-	-	-
					N.C.	−				6	CN3	FIN
		BCU	CN341	3	FIN:TXD	→				5		
				4	FIN:+5V	P				4		
				5	FIN:+5V	P				3		
				6	FIN:GND	G				2		
				7	FIN:GND	G				1		
		PSU	CN294	1	FIN:GND	G				9	CN4	FIN
				2	FIN:GND	G				8		
				3	FIN:GND	G				7		
				4	FIN:GND	G				6		
				5	FIN:+24V	P				5		
				6	FIN:+24V	P				4		
				7	FIN:+24V	P				3		
				8	FIN:+24V	P				2		
					N.C.					1		
10	D1205313 DOM	PSU	CN285	1	Drum:AC_L	P			−	1	CN829	Drum Heater
				2	Scanner:AC_L	P				1	CN823	Scanner Heater
				3	Tray:AC_L	P				1	CN824	Tray Heater
				4	BANK:AC_L	P				1	CN825	BANK Heater
				5	Drum:AC_N	P				2	CN829	Drum Heater
				6	Scanner:AC_N	P				2	CN823	Scanner Heater
				7	Tray:AC_N	P				2	CN824	Tray Heater
				8	BANK:AC_N	P				2	CN825	BANK Heater
11	D1205314	Inlet	INLET	L	AC_L_IN	P			−		T280	PSU
				N	AC_N_IN	P					T281	
				E	GND	G					T1	
12	D1205315	BCU	CN301	1	GND	G			−	50	CN100	IPU
				2	IPU Address:bit16	→				49		
				3	IPU Address:bit17	→				48		
				4	IPU Address:bit18	→				47		
				5	IPU Address:bit19	→				46		
				6	GND	G				45		
				7	IPU Address:bit20	→				44		
				8	IPU Address:bit21	→				43		
				9	IPU Address:bit22	→				42		
				10	IPU Address:bit23	→				41		
				11	GND	G				40		
				12	IPU Address:bit24	→				39		
				13	IPU Address:bit25	→				38		
				14	IPU Address:bit26	→				37		
				15	IPU Address:bit27	→				36		
				16	GND	G				35		
				17	IPU Address:bit28	→				34		
				18	IPU Address:bit29	→				33		
				19	IPU Address:bit30	→				32		
				20	IPU Address:bit31	→				31		
				21	GND	G				30		
				22	IPU Data:bit0	I/O				29		
				23	IPU Data:bit1	I/O				28		
				24	IPU Data:bit2	I/O				27		
				25	IPU Data:bit3	I/O				26		
				26	GND	G				25		
				27	IPU Data:bit4	I/O				24		
				28	IPU Data:bit5	I/O				23		
				29	IPU Data:bit6	I/O				22		
				30	IPU Data:bit7	I/O				21		
				31	GND	G				20		
				32	IPU Data:bit8	I/O				19		
				33	IPU Data:bit9	I/O				18		
				34	IPU Data:bit10	I/O				17		
				35	IPU Data:bit11	I/O				16		
				36	GND	G				15		
				37	IPU Data:bit12	I/O				14		
				38	IPU Data:bit13	I/O				13		
				39	IPU Data:bit14	I/O				12		
				40	IPU Data:bit15	I/O				11		
				41	GND	G				10		
				42	LEO1 Chip Select	→				9		
				43	LEO2 Chip Select	→				8		
				44	Ri20 Chip Select	→				7		
				45	ICIB Chip Select	→				6		
				46	Address Write Enable Signal	→				5		
				47	IPU Write	→				4		
				48	IPU Read/Write	→				3		
				49	IPU Read	→				2		
				50	GND	G				1		
13	D1205316	BCU	CN302	1	GND	G			−	30	CN101	IPU
				2	IPU Reset	→				29		
				3	LVDS:OE Control(H:Enable(	→		Enable		28		
				4	GND	G				27		
				5	IPU Interrupt	←				26		
				6	3.3V Reset(H:Reset(	←		Reset		25		
				7	GND	G				24		
				8	White Plate Scan Gate	→				23		
				9	Image Scan Gate	→				22		
				10	GND	G				21		
				11	GAVD Sync SCI:Chip Select	→				20		
				12	GAVD Sync SCI:Data Input	←				19		
				13	GND	G				18		
				14	GAVD Sync SCI:Clock	→				17		
				15	GND	G				16		
				16	GAVD Sync SCI:Data Output	→				15		
				17	GAVD Sync SCI:High Speed	→				14		
				18	GND	G				13		
				19	SBU Sync SCI: Chip Select	→				12		
				20	SBU Sync SCI:Data Input	←				11		
				21	GND	G				10		
				22	SBU Sync SCI:Data Output	→				9		
				23	GND	G				8		
				24	SBU Sync SCI:Clock	→				7		
				25	GND	G				6		
				26	Energy Saver Resume Sensor Power Control	←	Power Supply			5		
				27	Platen Cover Lift Sensor	→				4		
				28	ARDF Original Set Detect	→				3		
				29	LEO Sleep Cancel	→				2		
				30	GND	G				1		

D120/D121/D122/D139/D140/D141 Pin Assignment Lists (2/3)

Harness No.	P/N	CN (FROM) From	CN (FROM) No.	CN (FROM) Pin No.	Signal Information Signal	Direction	L	H	Relay Harness P/N	CN (To) Pin No.	CN (To) No.	CN (To) To
14	D1205317	BCU	CN325	1	HVP: Development PWM	→			–	12	CN295	HVP
				2	HVP: Development FB	←				11		
				3	HVP: Charge FB	←				10		
				4	HVP: Charge PWM	→				9		
				5	HVP: Transfer (+)PWM	→				8		
				6	HVP: Transfer (-)PWM	→				7		
				7	HVP: Transfer FB	←				6		
				8	HVP: Separation PWM	→				5		
				9	HVP: Separation FB	←				4		
				10	HVP:+5V	P				3		
				11	HVP:GND	G				2		
				12	HVP:+24VS	P				1		
15	D1205318	SDB	CN909	1	AC_N_ON (Blue)	P			–		T1	Main SW
				2	AC_N (Blue)	P					T2	
				3	AC_L_ON (White)	P					T3	
				4	AC_L (White)	P					T4	
			CN908	2	AC_L_ON	P				1	CN903	
				4	AC_N_ON	P				2		
				1	AC_L	P				3		
				3	AC_N	P				4		
16	D1205319 EXP	PSU	CN285	1	N.C.				–		–	
				2	Scanner:AC_L	P				1	CN823	Scanner Heater
				3	Paper Feed:AC_L	P				1	CN824	Tray Heater
				4	BANK:AC_L	P				1	CN825	Tray Heater (option)
				5	N.C.						–	
				6	Scanner:AC_N	P				2	CN823	Scanner Heater
				7	Paper Feed:AC_N	P				2	CN824	Tray Heater
				8	BANK:AC_N	P				2	CN825	Tray Heater (option)
17	D1205320 DOM	PSU	CN286	1	Fusing Heater:Main:L	P			–	1	CN826	Fusing Unit
				2	Fusing Heater:Sub:L	P				2		
				3	Fusing Heater:Main:N	P				3		
				4	Fusing Heater:Sub:N	P				4		
		BCU	CN326	1	Fusing Heater (Main):GND	G				14		
				2	Fusing Heater (Main):FB	←				9		
				3	Fusing Heater (Sub):GND	G				13		
				4	Fusing Heater (Sub):FB	←				8		
				5	Fusing Unit Set:Detect	←	Set	Not Set		10		
				6	Fusing Unit Set:GND	G				5		
			T1		FG	G				G		
		BCU	CN333	1	Fusing Solenoid:+24V	P				4	CN813	Fusing Solenoid
					N.C.	–				3		
					N.C.	–				2		
				2	Fusing Solenoid:Control	→	ON	OFF		1		
18	D1205321 NA	PSU	CN286	1	Fusing Heater:Main:L	P			–	1	CN826	Fusing Unit
				2	Fusing Heater:Sub:L	P				2		
				3	Fusing Heater:Main:N	P				3		
				4	Fusing Heater:Sub:N	P				4		
		BCU	CN326	1	Fusing Heater (Main):GND	G				14		
				2	Fusing Heater (Main):FB	←				9		
				3	Fusing Heater (Sub):GND	G				13		
				4	Fusing Heater (Sub):FB	←				8		
				5	Fusing Unit Set:Detect	←	Set	Not Set		11		
				6	Fusing Unit Set:GND	G				5		
			T1		FG	G				G		
		BCU	CN333	1	Fusing Solenoid:+24V	P				4	CN813	Fusing Solenoid
					N.C.	–				3		
					N.C.	–				2		
				2	Fusing Solenoid:Control	→	ON	OFF		1		
19	D1205322 EU	PSU	CN286	1	Fusing Heater:Main:L	P			–	1	CN826	Fusing Unit
				2	Fusing Heater:Sub:L	P				2		
				3	Fusing Heater:Main:N	P				3		
				4	Fusing Heater:Sub:N	P				4		
		BCU	CN326	1	Fusing Heater (Main):GND	G				14		
				2	Fusing Heater (Main):FB	←				9		
				3	Fusing Heater (Sub):GND	G				13		
				4	Fusing Heater (Sub):FB	←				8		
				5	Fusing Unit Set:Detect	←	Set	Not Set		12		
				6	Fusing Unit Set:GND	G				5		
			T1		FG	G				G		
		BCU	CN333	1	Fusing Solenoid:+24V	P				4	CN813	Fusing Solenoid
					N.C.	–				3		
					N.C.	–				2		
				2	Fusing Solenoid:Control	→	ON	OFF		1		

Harness No.	P/N	CN (FROM) From	CN (FROM) No.	CN (FROM) Pin No.	Signal Information Signal	Direction	L	H	Relay Harness P/N	CN (To) Pin No.	CN (To) No.	CN (To) To
20	D1205330				N.C.				–	8	CN1	PFU
		BCU	CN305	1	PFU:RXD	←				7		
				2	PFU:TXD	→				6		
				3	PFU:GND	G				5		
				4	PFU:GND	G				4		
				5	PFU:+5V	P				3		
				6	PFU:+5V	P				2		
				7	PFU:GND	G				1		
		BCU	CN306	1	PFU:GND	G				7	CN2	
				2	PFU:GND	G				6		
				3	PFU:GND	G				5		
				4	PFU:+24V	P				4		
				5	PFU:+24V	P				3		
				6	PFU:+24V	P				2		
				7	PFU:+24V	P				1		
		BCU	CN308	A1	Tray 1 Pick-up Solenoid:24VS	P			D1205353	14	CN3	Pick-up Solenoid
				A2	Tray 1 Pick-up Solenoid:Control	→				13		
				A3	1st Paper Feed Sensor:GND	G				12		Paper Feed Sensor
				A4	1st Paper Feed Sensor:Output	←	Paper	No Paper		11		
				A5	1st Paper Feed Sensor:5V	P				10		
				A6	1st Vertical Transport Sensor:GND	G				9		Vertical Transport Sensor
				A7	1st Vertical Transport Sensor:Outpu	←	Paper	No Paper		8		
				A8	1st Vertical Transport Sensor:5V	P				7		
				A9	1st Paper End Sensor:GND	G				6		Paper End Sensor
				A10	1st Paper End Sensor:Output	←	No Paper	Paper		5		
				A11	1st Paper End Sensor:5V	P				4		
				A12	1st Paper Overflow Sensor:GND	G				3		Paper Overflow Sensor
				A13	1st Paper Overflow Sensor:Output	←	Not Limit	Upper Limit		2		
				A14	1st Paper Overflow Sensor:5V	P				1		
				B1	Tray2 Pick-up Solenoid:24VS2	P				14	CN4	Pick-up Solenoid
				B2	Tray2 Pick-up Solenoid:Control	→				13		
				B3	2nd Paper Feed Sensor:GND	G				12		Paper Feed Sensor
				B4	2nd Paper Feed Sensor:Output	←	Paper	No Paper		11		
				B5	2nd Paper Feed Sensor:5V	P				10		
				B6	2nd Vertical Transport Sensor:GND	G				9		Vertical Transport Sensor
				B7	2nd Vertical Transport Sensor:Outp	←	Paper	No Paper		8		
				B8	2nd Vertical Transport Sensor:5V	P				7		
				B9	2nd Paper End Sensor:GND	G				6		Paper End Sensor
				B10	2nd Paper End Sensor:Output	←	No Paper	Paper		5		
				B11	2nd Paper End Sensor:5V	P				4		
				B12	2nd Paper Overflow Sensor:GND	G				3		Paper Overflow Sensor
				B13	2nd Paper Overflow Sensor:Output	←	Not Limit	Upper Limit		2		
				B14	2nd Paper Overflow Sensor:5V	P				1		
		BCU	CN304	1	Upper Transport Clutch:24V	P				2	CN5	Transport Clutch
				2	Upper Transport Clutch:Control	→	OFF	ON		1		
				3	Upper Paper Feed Clutch:24V	P				2	CN6	Paper Feed Clutch
				4	Upper Paper Feed Clutch:Control	→	OFF	ON		1		
				5	Lower Transport Clutch:24V	P				2	CN7	Transport Clutch
				6	Lower Transport Clutch:Control	→	OFF	ON		1		
				7	Lower Paper Feed Clutch:24V	P				2	CN8	Paper Feed Clutch
				8	Lower Paper Feed Clutch:Control	→	OFF	ON		1		
		BCU	CN307	A1	1st Tray:SF:GND	G				3	CN9	Side Fence
				A2	1st Tray:SF:Size Detection 4	←				2		
				A3	1st Tray:SF:5V	P				1		
				A4	1st Tray Paper Size Sensor:Set	←				5	CN10	1st Tray Paper Size Sensor
				A5	1st Tray Paper Size Sensor:Detect 1	←				4		
				A6	1st Tray Paper Size Sensor:Detect 2	←				3		
				A7	1st Tray Paper Size Sensor:GND	G				2		
				A8	1st Tray Paper Size Sensor:Detect 3	←				1		
				A9	N.C.	–						
				A10	N.C.	–						
				A11	N.C.	–						
				A12	2nd Tray Paper Size Sensor:Set	←				5	CN11	2nd Tray Paper Size Sensor
				A13	2nd Tray Paper Size Sensor:Detect 1	←				4		
				A14	2nd Tray Paper Size Sensor:Detect 2	←				3		
				A15	Sensor:GND	G				2		
				A16	2nd Tray Paper Size Sensor:Detect 3	←				1		
				B1	1st Paper Tray Lift Motor:Paper Height Sensor 1:GND	G				3	CN12	1st Paper Height Sensor 1
				B2	1st Paper Tray Lift Motor:Paper Height Sensor 1:Detect	←				2		
				B3	1st Paper Tray Lift Motor:Paper Height Sensor 1:5V	P				1		
				B4	1st Paper Tray Lift Motor:Paper Height Sensor 2:GND	G				3	CN13	1st Paper Height Sensor 2
				B5	1st Paper Tray Lift Motor:Paper Height Sensor 2:Detect	←				2		
				B6	1st Paper Tray Lift Motor:Paper Height Sensor 2:5V	P				1		
				B7	1st Paper Tray Lift Motor:Control(−)	→				2	CN14	1st Paper Tray Lift Motor
				B8	Motor:Control(+)	→				1		
				B9	2nd Paper Tray Lift Motor:Paper Height Sensor 1:GND	G				3	CN15	2nd Paper Height Sensor 1
				B10	2nd Paper Tray Lift Motor:Paper Height Sensor 1:Detect	←				2		
				B11	2nd Paper Tray Lift Motor:Paper Height Sensor 1:5V	P				1		
				B12	2nd Paper Tray Lift Motor:Paper Height Sensor 2:GND	G				3	CN16	2nd Paper Height Sensor 2
				B13	2nd Paper Tray Lift Motor:Paper Height Sensor 2:Detect	←				2		
				B14	2nd Paper Tray Lift Motor:Paper Height Sensor 2:5V	P				1		
				B15	2nd Paper Tray Lift Motor:Control(−)	→				2	CN17	2nd Paper Tray Lift Motor
				B16	Motor:Control(+)	→				1		
		BCU	CN314	1	Duplex Motor:24VS	P			D1205350	12	CN18	Duplex Motor
				2	Duplex Motor:A	→				11		
				3	Duplex Motor:/A	→				10		
				4	Duplex Motor:24VS	P				9		
				5	Duplex Motor:B	→				8		
				6	Duplex Motor:/B	→				7		
				7	Duplex Unit Entrance Sensor:GND	G				6		Duplex Unit Entrance Sensor
				8	Duplex Unit Entrance Sensor:Detec	←	Paper	No Paper		5		
				9	Duplex Unit Entrance Sensor:5V	P				4		
				10	Duplex Unit Exit Sensor:GND	G				3		Duplex Unit Exit Sensor
				11	Duplex Unit Exit Sensor:Detect	←	Paper	No Paper		2		
				12	Duplex Unit Exit Sensor:5V	P				1		
				13	N.C.	G						
		BCU	CN316	1	By-pass Paper Size Detect 2	←			D1205357	18	CN19	By-pass Paper Size Sensor
				2	By-pass Paper Size Detect 1	←				17		
				3	By-pass:GND	G				16		
				4	By-pass Paper Size Detect 4	←				15		
				5	By-pass Paper Size Detect 3	←				14		
				6	By-pass Paper Length Sensor:GND	G				13		
				7	By-pass Paper Length Sensor:Dete	←	Paper	No Paper		12		By-pass Paper Length Sensor
				8	By-pass Paper Length Sensor:5V	P				11		
				9	By-pass Paper End Sensor:GND	G				10		By-pass Paper End Sensor
				10	By-pass Paper End Sensor:Detect	←	Paper	No Paper		9		
				11	By-pass Paper End Sensor:5V	P				8		
				12	By-pass Tray HP Sensor:GND	G				7		By-pass Tray HP Sensor
				13	By-pass Tray HP Sensor:Detect	←	Down	Upper Limit		6		
				14	By-pass Tray HP Sensor:5V	P				5		
		BCU	CN317	1	By-pass Motor:A	→				4		By-pass Motor
				2	By-pass Motor:/A	→				3		
				3	By-pass Motor:B	→				2		
				4	By-pass Motor:/B	→				1		
21	D1205336	BCU:Relay D1205301 CN801	CN853	1	ID Sensor:+5V	P			–	1	CN854	ID Sensor
				2	ID Sensor:GND	G				2		
				3	ID Sensor:PWM	→				3		
				4	ID Sensor:FB	←				4		
22	D1205337	BCU:Relay D1205301 CN804	CN856	1	Registration Sensor:GND	G			–	3	CN855	Registration Sensor
				2	Registration Sensor:Detect	←	Paper Detected	Not Detected		2		
				3	Registration Sensor:+5V	P				1		

D120/D121/D122/D139/D140/D141 Pin Assignment Lists (3/3)

Harness No.	P/N	CN (FROM) From	CN (FROM) No.	CN (FROM) Pin No.	Signal Information Signal	Direction	L	H	Relay Harness P/N	CN (To) Pin No.	CN (To) No.	CN (To) To
23	D1205338	BCU:Relay	CN1	1	Right Door Open Switch:GND	G			-	2	CN2	Right Door Open Switch
		D1205301		2	Right Door Open Switch:Right D	←	Close	Open		1		
24	D1205339	BCU	CN303	1	GND	G			-	2	CN104	IPU
				2	5VS	P				1		
25	D1205341	BCU	CN340	A1	BRDG:GND	G			-	10	CN1	Bridge Unit or Shift Tray
				A2	BRDG:5V	P				9		
				A3	BRDG:N.C. (SHFT_TRY:Set_DET	←	Shift Set	Not Set		8		
				A4	BRDG:RLY_SN (":HLF_TRN_SN)	←	Paper	No Paper		7		
				A5	BRDG:P-EXT_SN (":HLF_TRN_S	←	Paper	No Paper		6		
				A6	BRDG:DRV_MT:RST (":LIFT_MT:CTLB)	→	Reset	Cancel Reset		5		
				A7	BRDG:DRV_MT:CRRNT_SW (":":CTLA)	→	Power Up	Power Down		4		
				A8	BRDG:GND	G				3		
				A9	BRDG:24V	P				2		
					N.C.	-				1		
				B1	BRDG:24V	P				9	CN2	
				B2	BRDG:GND	G				8		
				B3	BRDG:DRV_MT:ENBL	→	Enable	Disable		7		
				B4	BRDG:SET_DETECT	←	Bridge Unit Set	Not Set		6		
				B5	BRDG:JNC_GAT:PWM	→	OFF	ON		5		
				B6	BRDG:DRV_MT:CLOCK	→				4		
				B7	N.C.	-				3		
				B8	BRDG:L-GUIDE_DETECT	←	Close	Open		2		
				B9	BRDG:R-GUIDE_DETECT	←	Close	Open		1		
26	D1205343	Development Bias	T1		HVP:Development(-1500 to 0V	←			-		T2	HVP T291
27	D1205344	BCU:Relay	CN1	1	PCU:Set Detect:5V	←	Not Set	Set	-	1	CN2	PCU
		D1205302	(D1203545)	2	PCU:GND	G				2		
				3	PCU:N.C.	-						
				4	PCU:TD Sensor:FB	←				3		
				5	PCU:+5V	P				4		
				6	PCU:N.C.	-						
28	D1205346	BCU:Relay	CN1	1	Duplex Fan	→	OFF	ON	-	1	CN2	Duplex Fan
		D1205300		2	Duplex Fan:Lock Detect	←	Normal	Error		2		
				3	Duplex Fan:GND	G				3		
29	D1205350	BCU:Relay	CN920	1	Duplex Motor:24VS	P			-	5	CN922	Motor
		D1205330		2	Duplex Motor:A	→				4		
				3	Duplex Motor:/A	→				6		
				4	Duplex Motor:24VS	P				2		
				5	Duplex Motor:B	→				3		
				6	Duplex Motor:/B	→				1		
				7	Duplex Unit Entrance Sensor:GN	G				3	CN923	Entrance Sensor
				8	Duplex Unit Entrance Sensor:De	←	Paper	No Paper		2		
				9	Duplex Unit Entrance Sensor:5V	P				1		
				10	Duplex Unit Exit Sensor:GND	G				3	CN924	Exit Sensor
				11	Duplex Unit Exit Sensor:Detect	←	Paper	No Paper		2		
				12	Duplex Unit Exit Sensor:5V	P				1		
			T1		Ground Wire:Motor						T2	
			T3		Ground Wire:Entrance Sensor						T4	
			T5		Ground Wire:Exit Sensor						T6	
30	D1205351	BCU:Relay	CN1	1	Duplex Unit Entrance Sensor:GN	G			-	3	CN2	Entrance Sensor
		D1205350		2	Duplex Unit Entrance Sensor:De	←	Paper	No Paper		2		
				3	Duplex Unit Entrance Sensor:5V	P				1		
31	D1205353	BCU:Relay	CN1	1	Pick-up Solenoid:+24VS2	P			-	2	CN2	Pick-up Solenoid
		D1205330		2	Pick-up Solenoid:Control	→				1		
		[CN3]		3	Paper Feed Sensor:GND	G				3	CN3	Paper Feed Sensor
				4	Paper Feed Sensor:Output	←	Paper	No Paper		2		
				5	Paper Feed Sensor:5V	P				1		
				6	Vertical Transport Sensor:G	G				3	CN4	Vertical Transport Sensor
				7	Vertical Transport Sensor:D	←	Paper	No Paper		2		
				8	Vertical Transport Sensor:+	P				1		
				9	Paper End Sensor:GND	G				3	CN5	Paper End Sensor
				10	Paper End Sensor:Detect	←	No Paper	Paper		2		
				11	Paper End Sensor:+5V	P				1		
				12	Paper Overflow Sensor:GN	G				3	CN6	Paper Overflow Sensor
				13	Paper Overflow Sensor:Det	←	Not Limit	Upper Limit		2		
				14	Paper Overflow Sensor:+5V	P				1		
32	D1205355	BCU:Relay	CN330	1	1BIN:Inverse signal	→	ON	OFF	-	7	CN888	1BIN
		D1205306		2	1BIN:Transport Sensor	←	Paper	No Paper		6		
		CN815		3	1BIN:Paper Sensor	←	Paper	No Paper		5		
				4	1BIN:Set Detect	←	Set	Not Set		4		
				5	1BIN:GND	G				3		
				6	1BIN:5VE	P				2		
				7	1BIN:5V	P				1		
				8	1BIN:LED:CATHODE					2	CN889	1BIN LED
				9	1BIN:LED:ANODE					1		
		BCU:Relay	CN331	1	Junction Solenoid:+24V	P			-	2	CN887	Junction Solenoid
		D1205306		2	Junction Solenoid:Control	→	ON	OFF		1		
		CN814		3	Inverter Motor:Excitation Signa	→				6	CN886	Inverter Motor
				4	Inverter Motor:Excitation Signa	→				5		
				5	Inverter Motor:+24V	P				4		
				6	Inverter Motor:+24V	P				3		
				7	Inverter Motor:Excitation Signa	→				2		
				8	Inverter Motor:Excitation Signa	→				1		
				9	Inverter Sensor:GND	G				3	CN885	Inverter Sensor
				10	Inverter Sensor:Detection	←	Paper	No Paper		2		
				11	Inverter Sensor:+5V	P				1		
				12	Inverter Unit Set Detection	G	Set	Not Set		13	CN331	
			T1		Ground Wire						T2	
33	D1205357	BCU:Relay	CN817	1	By-pass Paper Size Detect 2	←			D1205358	8	CN3	By-pass Paper Size Sensor
		D1205330		2	By-pass Paper Size Detect 1	←				7		
		[CN19]		3	By-pass:GND	G				6		
				4	By-pass Paper Size Detect 4	←				5		
				5	By-pass Paper Size Detect 3	←				4		
				6	By-pass Paper Length Sensor:GND	G				3		By-pass Paper Length Sensor
				7	By-pass Paper Length Sensor:Dete	←	Paper	No Paper		2		
				8	By-pass Paper Length Sensor:5V	P				1		
				9	By-pass Paper End Sensor:GND	G			-	3	CN6	By-pass Paper End Sensor
				10	By-pass Paper End Sensor:Detect	←	Paper	No Paper		2		
				11	By-pass Paper End Sensor:5V	P				1		
				12	By-pass Tray HP Sensor:GND	G				3	CN7	By-pass Tray HP Sensor
				13	By-pass Tray HP Sensor:Detect	←	Down	Up		2		
				14	By-pass Tray HP Sensor:5V	P				1		
				15	By-pass Motor:A	→				4	CN10	By-pass Motor
				16	By-pass Motor:/A	→				3		
				17	By-pass Motor:B	→				2		
				18	By-pass Motor:/B	→				1		
34	D1205358	D1205357	CN1	1	By-pass Paper Size Detect 2	←			-	6	CN2	By-pass Paper Size Sensor
		CN3		2	By-pass Paper Size Detect 1	←				5		
				3	By-pass:GND	G				4		
					N.C.					3		
				4	By-pass Paper Size Detect 4	←				2		
				5	By-pass Paper Size Detect 3	←				1		
				6	By-pass Paper Length Sensor:GND	G	Paper	No Paper		3	CN3	By-pass Paper Length Sensor
				7	By-pass Paper Length Sensor:Dete	←				2		
				8	By-pass Paper Length Sensor:5	P				1		
35	D1205203	SIO	CN317	1	GND	G			-	12	CN320	LED-B
				2	LED_8	←				11		
				3	LED_7	←				10		
				4	LED_6	←				9		
				5	LED_5	←				8		
				6	LED_4	←				7		
				7	V_LED1	P				6		
				8	LED_2	←				5		
				9	V_LED2	P				4		
				10	LED_1	←				3		
				11	LED_3	←				2		
				12	GND	G				1		

Harness No.	P/N	CN (FROM) From	CN (FROM) No.	CN (FROM) Pin No.	Signal Information Signal	Direction	L	H	Relay Harness P/N	CN (To) Pin No.	CN (To) No.	CN (To) To
36	D1205215	SIO	CN313	1	GND	G			-	3	CN1	APS3
				2	XAPS3	←	Original			2		
				3	+5VAPS	P				1		
				4	GND	G				3	CN2	APS5
				5	XAPS5	←	Original			2		
				6	+5VAPS	P				1		
			CN315	1	GND	G				17	CN301	SBU
				2	+5V	P				16		
				3	+5V	P				15		
				4	+10V	P				14		
				5	GND	G				13		
				6	GND	G				12		
				7	GND	G				11		
				8	GND	G				10		
				9	+3.3V	P				9		
				10	+3.3V	P				8		
				11	+3.3V	P				7		
				12	GND	G				6		
				13	GND	G				5		
				14	+6V	P				4		
				15	+6V	P				3		
				16	GND	G				2		
				17	LAMPCLK	←				1		
37	D1205216	BCU	CN336	1	GND	G			-	3	CN1	HPS
				2	HPS:Sensor Detect	←		Home		2		
				3	+5V	P				1		
				4	GND	G				3	CN2	AKS
				5	AKS_N:Platen Cover Sensor D	←	Cover Open	Cover Closed		2		
				6	+5VE_AKS:'+5VE	P				1		
38	D1205217	BCU	CN334	1	GND	G			-	19	CN311	SIO
				2	SCNPOWON_N	→	Power On			18		
				3	LED_ERR	←		Error		17		
				4	LAMP_ON_N	→		Lamp OFF		16		
				5	APS5_N	←				15		
				6	APS3_N	←				14		
				7	APS_ON	→		APS Drive		13		
				8	GND	G				12		
				9	SMD_ERR	←		Error		11		
				10	SMD_SYNC_N	→	No Synchronization			10		
				11	SMD_M1	→				9		
				12	SMD_M2	→				8		
				13	SMD_CLK_N	→				7		
				14	SMD_DIR	→	Return	Forward		6		
				15	SMD_RST	→		Reset		5		
				16	SMD_VR1	→				4		
				17	SMD_VR2	→				3		
				18	SMD_VR3	→				2		
				19	GND	G				1		
39	D1205218	SIO	CN314	1	XA	→			-	1	CN1	STM
				2	+24VA	P				2		
				3	XB	→				3		
				4	A	→				4		
				5	+24VA	P				5		
				6	B	→				6		
40	D1205220	IPU	CN111	A1	GND	G			-	B15	CN300	SBU
				A2	XSFGATE_SBU	→	Original Area			B14		
				A3	GND	G				B13		
				A4	SBU_SYDO	→				B12		
				A5	SBU_SYCLK	→				B11		
				A6	TA2-	←				B10		
				A7	TB2-	←				B9		
				A8	TC2-	←				B8		
				A9	LVDSCK2-	←				B7		
				A10	GND	G				B6		
				A11	TB1-	←				B5		
				A12	TC1-	←				B4		
				A13	GND	G				B3		
				A14	GND	G				B2		
				A15	XCNSBU	←	SBU connected			B1		
				B1	GND	G				A15		
				B2	GND	G				A14		
				B3	GND	G				A13		
				B4	TC+	←				A12		
				B5	TB+	←				A11		
				B6	GND	G				A10		
				B7	LVDSCK2+	←				A9		
				B8	TC2+	←				A8		
				B9	TB2+	←				A7		
				B10	TA2+	←				A6		
				B11	SBU_SYCS_N	→	Serial communication active			A5		
				B12	SBU_SYDI	←				A4		
				B13	XSHGATE_SBU	→		White plate area		A3		
				B14	GND	G				A2		
				B15	GND	G				A1		
41	D1205222	LDB	CN402	1	DETP_N	←	Synchronization Detect	-	-	3	CN230	Synchronization Detector
				2	LD5V	PO				2		
				3	GND	G				1		
42	D1205223	IPU	CN112	1	5VS	PO			-	10	CN401	LDB
				2	LDD_N	→				9		
				3	LDD	→				8		
				4	DETP_N	←	Synchronization Detect	-		7		
				5	VLDERR	←	Door Close	Door Open		6		
				6	LDERR_N	←	LD Error	Normal		5		
				7	LDOFF	→	Cancel LD OFF	LD Forced OFF		4		
				8	APCEN_N	→	APC Sample	APC Hold		3		
				9	GND	G				2		
				10	LDLVL	O	Analog voltage	Analog voltage		1		
43	D1205224	IPU:Relay	CN831	1	Polygon MT:24V	PO			-	5	CN830	Polygon Motor
		D1205304		2	Polygon MT:GND	G				4		
		CN809		3	Polygon MT:Start	→	Rotate	Stop		3		
				4	Polygon MT:Synchronization	←	Synchronization	Unlocked		2		
				5	Polygon MT:Clock	→	-	-		1		
44	D1205326	IPU	CN1	1	XPW_SW	←			-	12	CN2	OPU
		CN110		2	5VE_LPS	PO				11		
				3	OP_REQ	←				10		
				4	GND	G				9		
				5	OP_RXD	←				8		
				6	OP_RCLK	→				7		
				7	GND	G				6		
				8	OP_TCLK	→				5		
				9	OP_TXD	→				4		
				10	5V	PO				3		
				11	5V	PO				2		
				12	24V	PO				1		
45	D1205273	BCURelay	CN1	3	Motor(Main)	P			-	–	T5	Motor(Main)
	DOM	D1205320		1	Thermostat(Main)	P				–	T2	Thermostat(Main)
				9	Thermistor 1(+)	←				1	CN2	Thermistor 1
				14	Thermistor 1(−)					3		
				5	Connection Detection	→				10	CN1	Connection Detection
				G	FG					–	T3	
				4	Heater (Sub)	P				–	T4	Heater (Sub)
				2	Thermostat(Sub)	P				–	T1	Thermostat(Sub)
				8	Thermistor 2(+)	←				1	CN3	Thermistor 2
				13	Thermistor 2(−)					3		
46	D1205274	BCURelay	CN1	3	Motor(Main)	P			-	–	T5	Motor(Main)
	NA	D1205321		1	Thermostat(Main)	P				–	T2	Thermostat(Main)
				9	Thermistor 1(+)	←				1	CN2	Thermistor 1
				14	Thermistor 1(−)					3		
				5	Connection Detection	→				11	CN1	Connection Detection
				G	FG					–	T3	
				4	Heater (Sub)	P				–	T4	Heater (Sub)
				2	Thermostat(Sub)	P				–	T1	Thermostat(Sub)
				8	Thermistor 2(+)	←				1	CN3	Thermistor 2
				13	Thermistor 2(−)					3		
47	D1205275	BCURelay	CN1	3	Motor(Main)	P			-	–	T5	Motor(Main)
	EU	D1205322		1	Thermostat(Main)	P				–	T2	Thermostat(Main)
				9	Thermistor 1(+)	←				1	CN2	Thermistor 1
				14	Thermistor 1(−)					3		
				5	Connection Detection	→				12	CN1	Connection Detection
				G	FG					–	T3	
				4	Heater (Sub)	P				–	T4	Heater (Sub)
				2	Thermostat(Sub)	P				–	T1	Thermostat(Sub)
				8	Thermistor 2(+)	←				1	CN3	Thermistor 2
				13	Thermistor 2(−)					3		
	D0193464	Charge Bias	T		HVP:Charge(-2500 to 0V(	←			-	Red	T	HVP T292
	D0193951	Transfer Bias	T		HVP:Transfer(-2000 to 4000V(	←			-	Yellow	T	HVP T293
	D0193953	Separation Bias	T		HVP:Separation(-4000 to 0V(	←			-	White	T	HVP T294

D120/D121/D122/D139/D140/D141 ELECTRICAL COMPONENT LAYOUT (1/2)

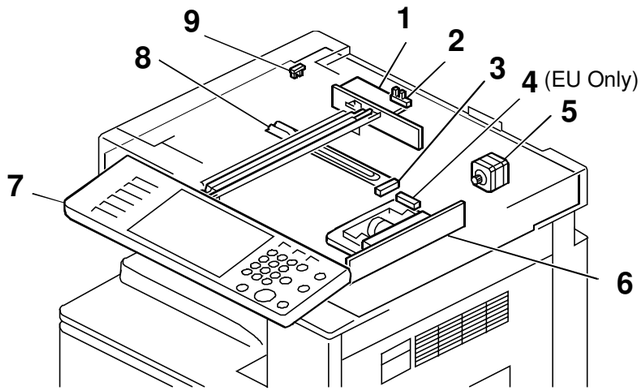

Fig-1 D120V101EU

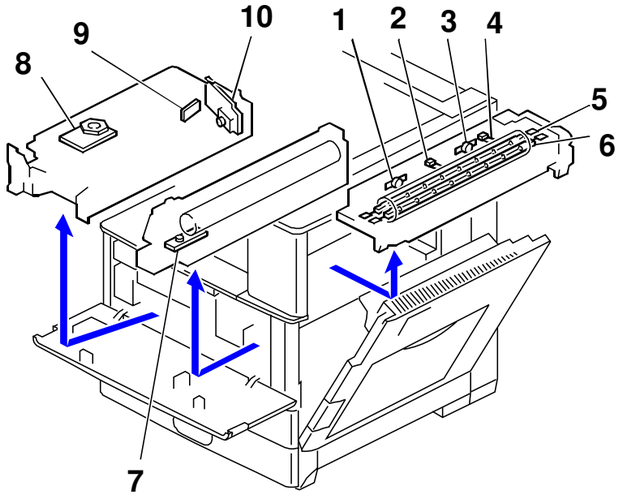

Fig-2 D120V102

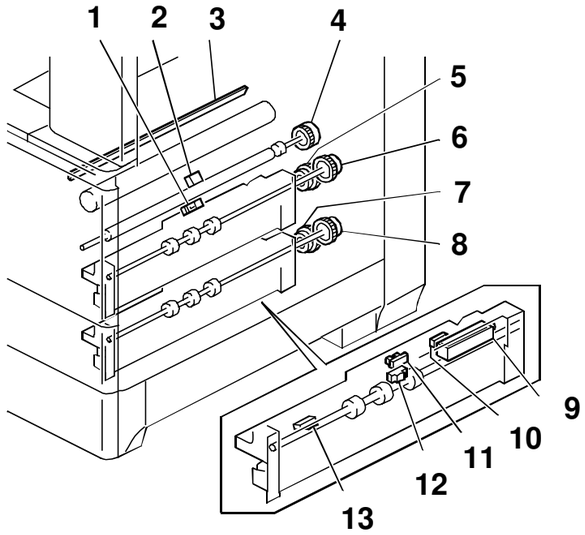

Fig-3 D120V103

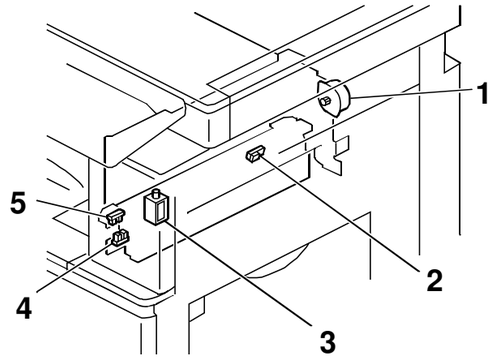

Fig-4 D120V104

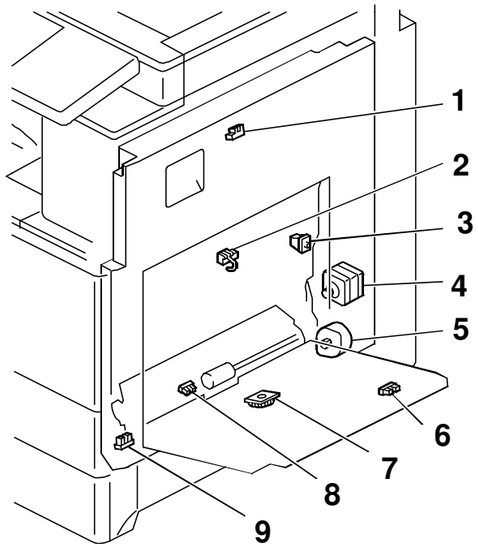

Fig-5 D120V105

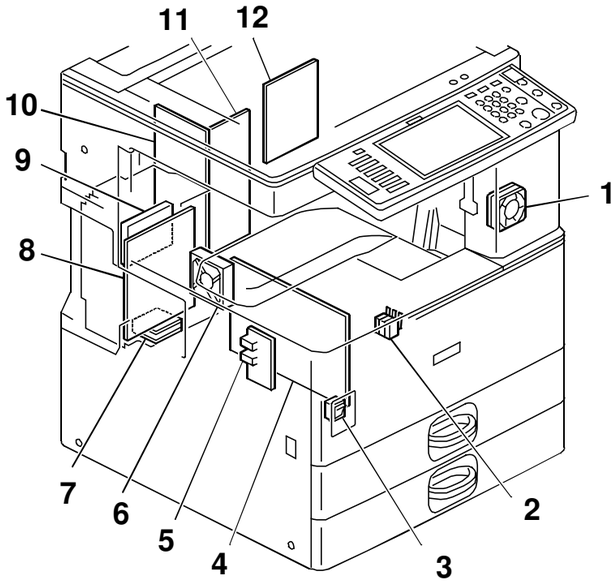

Fig-6 D120V106

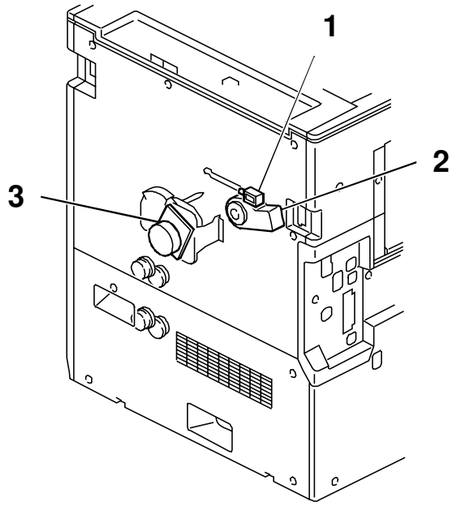

Fig-7 D120V107

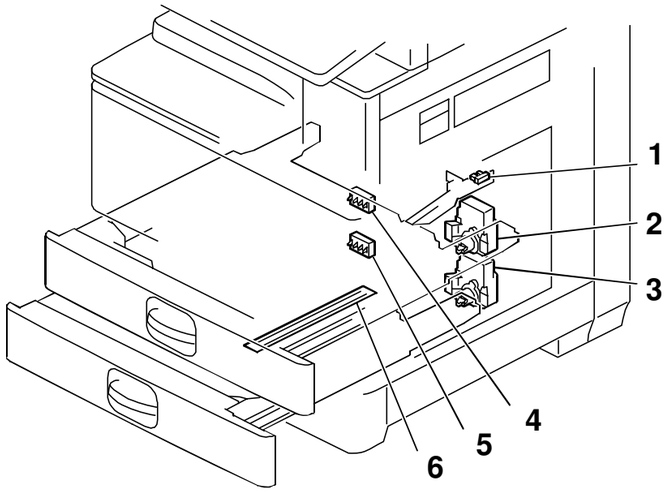

Fig-8 D120V108

D120/D121/D122/D139/D140/D141 ELECTRICAL COMPONENT LAYOUT (1/2)

Symbol	Index No.	Name	P to P	Page
PCBs				
PCB1	F6-11	BCU	5C	1/2
PCB2	F1-1	SIO	4F	1/2
PCB3	F1-6	SBU	5G	1/2
PCB4	F6-10	IPU	7E	1/2
PCB5	F2-10	LDB	7F	1/2
PCB6	F1-7	OPU	7F	2/2
PCB7	F6-5	SDB	8F	1/2
PCB8	F6-4	PSU	9E	1/2
PCB9	F6-8	CTL	6D	2/2
PCB10	F6-12	HVP	9B	1/2
Symbol	**Index No.**	**Name**	**P to P**	**Page**
Heaters				
H1	F2-5	Fusing Heater (Main)	8E	1/2
H2	F2-6	Fusing Heater (Sub)	8E	1/2
H3	F1-8	Anti-Condensation Heater (Option)	9F	1/2
H4	F8-6	Tray Heater	9F	1/2
Symbol	**Index No.**	**Name**	**P to P**	**Page**
Sensors				
S1	F8-1	Small Paper Size Sensor	4B	1/2
S2	F8-4	1st Tray Paper Size Sensor	4B	1/2
S3	F8-5	2nd Tray Paper Size Sensor	4B	1/2
S4,S5	F8-2	1st Paper Height Sensor 1,2 (Tray Lift Motor)	4B	1/2
S6,S7	F8-3	2ndPaper Height Sensor 1,2 (Tray Lift Motor)	4B	1/2
S8	F3-10	2nd Paper Overflow Sensor	5A	1/2
S9	F3-11	2nd Paper End Sensor	5A	1/2
S10	F3-12	2nd Vertical Transport Sensor	5A	1/2
S11	F3-13	2nd Paper Feed Sensor	5A	1/2
S12	F3-10	1st Paper Overflow Sensor	5A	1/2
S13	F3-11	1st Paper End Sensor	5A	1/2
S14	F3-12	1st Vertical Transport Sensor	6A	1/2
S15	F3-13	1st Paper Feed Sensor	6A	1/2
S16	F5-1	Duplex Unit Entrance Sensor	6A	1/2
S17	F5-2	Duplex Unit Exit Sensor	7A	1/2
S18	F5-9	By-pass Tray HP Sensor	7A	1/2
S19	F5-8	By-pass Paper End Sensor	7A	1/2
S20	F5-6	By-pass Paper Length Sensor	7A	1/2
S21	F5-7	By-pass Paper Size Sensor	7A	1/2
S22	F4-4	Paper Exit Sensor	9B	1/2
S23	F4-5	Paper Overflow Sensor	9B	1/2
S24	F2-7	TD Sensor	9A	1/2
S25	F3-2	ID Sensor	2E	1/2
S26	F3-1	Registration Sensor	3E	1/2
S27	F4-2	Inverter Sensor	3E	1/2
S28	F1-3	Original Length Sensor 1	5G	1/2
S29	F1-4	Original Length Sensor 2	5G	1/2
S30	F1-9	Scanner H.P Sensor	5D	1/2
S31	F1-2	Platen Cover Sensor	5D	1/2

Symbol	Index No.	Name	P to P	Page
FANs				
FAN1	F6-1	Fusing Fan	9F	1/2
FAN2	F6-6	Exhaust Fan	9D	1/2
FAN3	F6-7	CTL Fan	9D	1/2
Symbol	**Index No.**	**Name**	**P to P**	**Page**
Motors				
M1	F8-2	1st Paper Tray Lift Motor	4B	1/2
M2	F8-3	2nd Paper Tray Lift Motor	4B	1/2
M3	F5-4	Duplex Motor	6A	1/2
M4	F5-5	By-pass Motor	7A	1/2
M5	F7-2	Toner Supply Motor	8B	1/2
M6	F4-1	Inverter Motor	3E	1/2
M7	F1-5	Scannor Motor	4G	1/2
M8	F2-8	Polygon Mirror Motor	6F	1/2
M9	F7-3	Main Motor	10B	1/2
Symbol	**Index No.**	**Name**	**P to P**	**Page**
Clutches				
MC1	F3-6	Upper Paper Feed Clutch	2B	1/2
MC2	F3-5	Upper Transport Clutch	3B	1/2
MC3	F3-8	Lower Paper Feed Clutch	3B	1/2
MC4	F3-7	Lower Transport Clutch	3B	1/2
MC5	F3-4	Registration Clutch	2D	1/2
Symbol	**Index No.**	**Name**	**P to P**	**Page**
Solenoids				
SOL1	F3-9	Tray Pick-up Solenoid	6A	1/2
SOL2	F3-9	Tray2 Pick-up Solenoid	5A	1/2
SOL3	F4-3	Paper Exit Solenoid	3E	1/2
SOL4	F7-1	Fusing Drive Release Solenoid	8D	1/2
Symbol	**Index No.**	**Name**	**P to P**	**Page**
Switches				
SW1	F6-2	Front Door Safety Switch	6E	1/2
SW2	F5-3	Right Door Open Switch	3E	1/2
SW3	F6-3	Main Power Switch	8G	1/2
Symbol	**Index No.**	**Name**	**P to P**	**Page**
Others				
LSD1	F2-9	Laser Synchronization Detector	7G	1/2
L1	F3-3	Fusing Lamp	8B	1/2
TH1	F2-2	Thermistor (MAIN)	8E	1/2
TH2	F2-4	Thermistor (SUB)	8E	1/2
TS1	F2-1	Thermostat (MAIN)	8E	1/2
TS2	F2-3	Thermostat (SUB)	8E	1/2
HDD1	F6-9	HDD	4B	2/2

D579 POINT TO POINT DIAGRAM

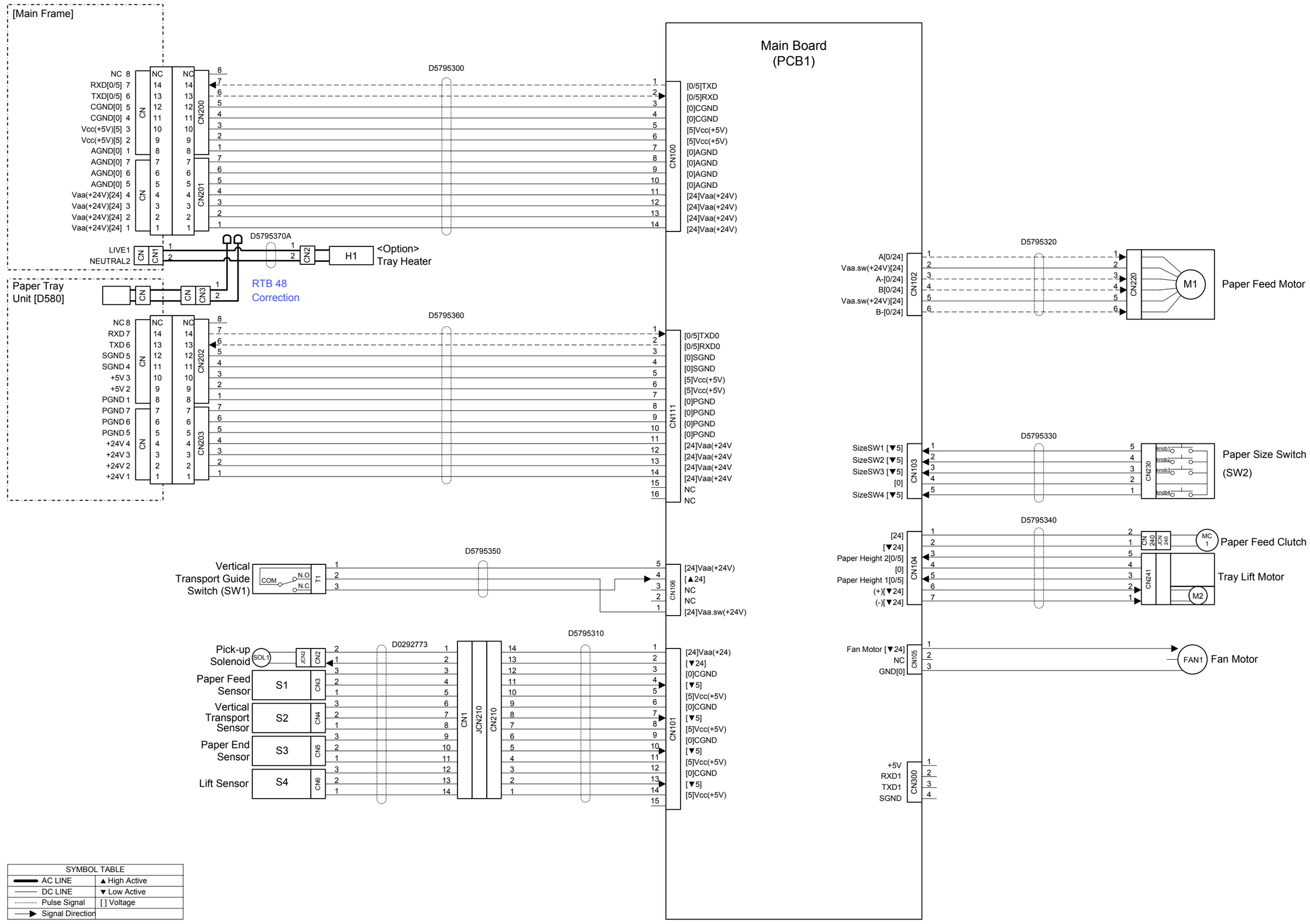

SYMBOL TABLE	
AC LINE	▲ High Active
DC LINE	▼ Low Active
Pulse Signal	[ ] Voltage
Signal Direction	

D579 ELECTRICAL COMPONENT LAYOUT

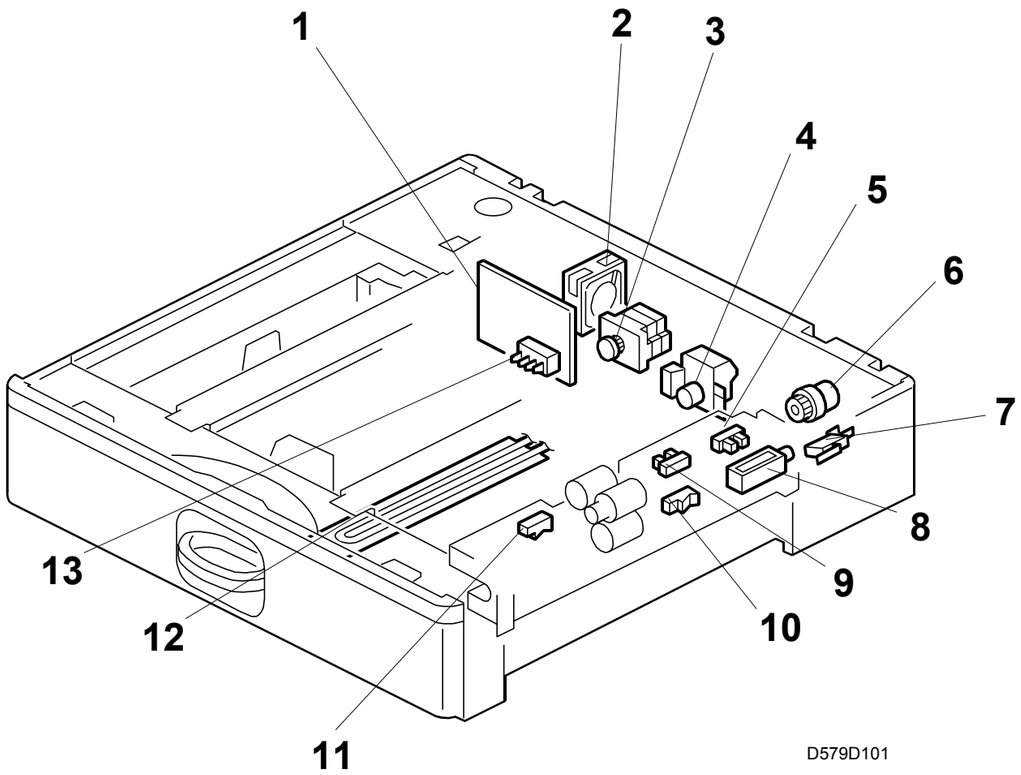

Symbol	Name	Index No.	P to P
Motors			
M1	Paper Feed	3	C9
M2	Tray Lift	4	E9
Sensors			
S1	Paper Feed	11	F3
S2	Vertical Transport	10	F3
S3	Paper End	9	F3
S4	Lift	5	F3
Solenoids			
SOL1	Pick-up	8	E3
Switches			
SW1	Vertical Transport	7	E3
SW2	Paper Size	13	D9
Magnetic Clutches			
MC1	Paper Feed	6	E9
PCBs			
PCB1	Main Board	1	B6
Others			
H1	Optional Tray Heater	12	C3
Fan			
FAN1	Fan Motor	2	E9

D580 POINT TO POINT DIAGRAM

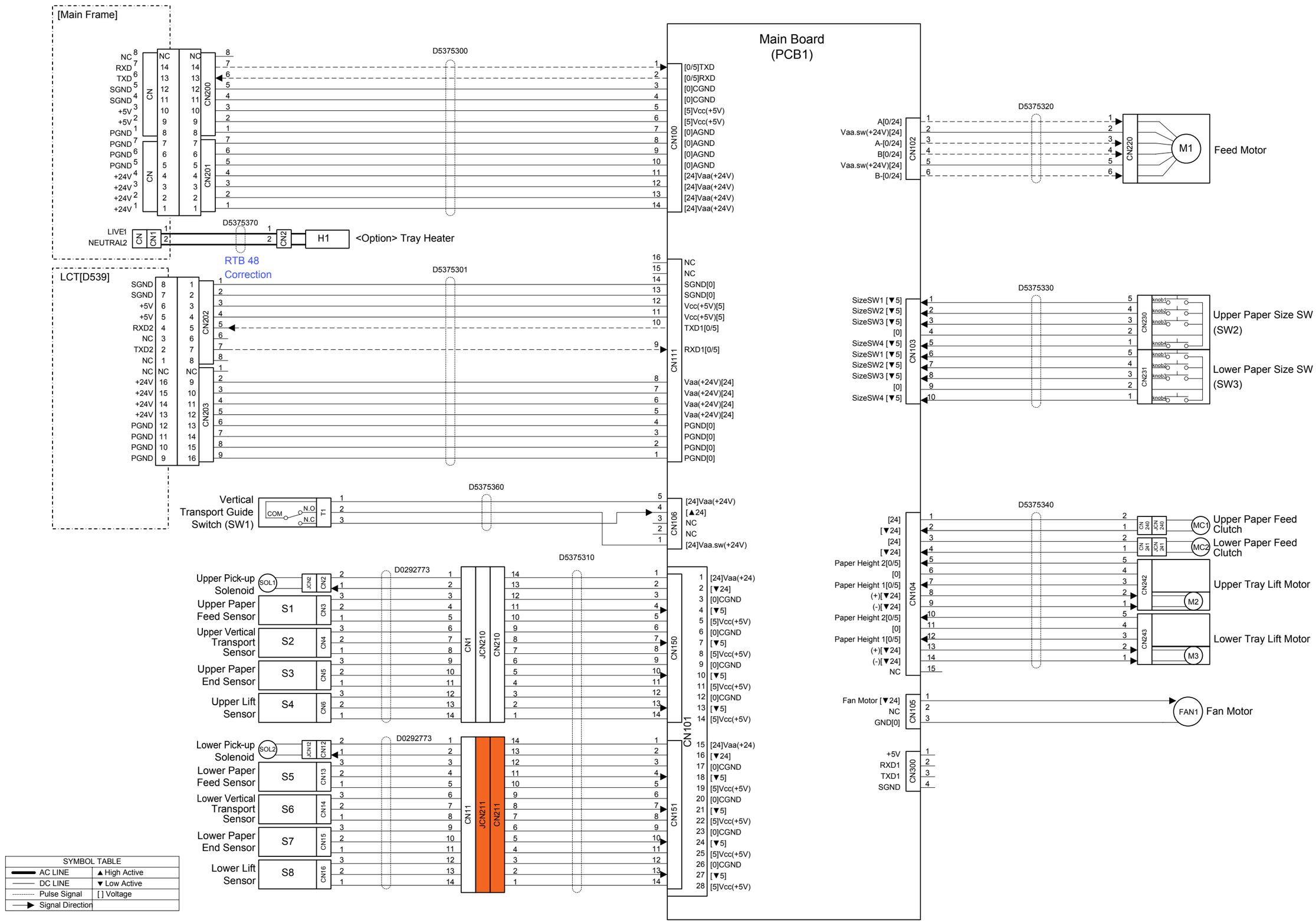

SYMBOL TABLE	
AC LINE	▲ High Active
DC LINE	▼ Low Active
Pulse Signal	[ ] Voltage
Signal Direction	

ELECTRICAL COMPONENT LAYOUT (D580)

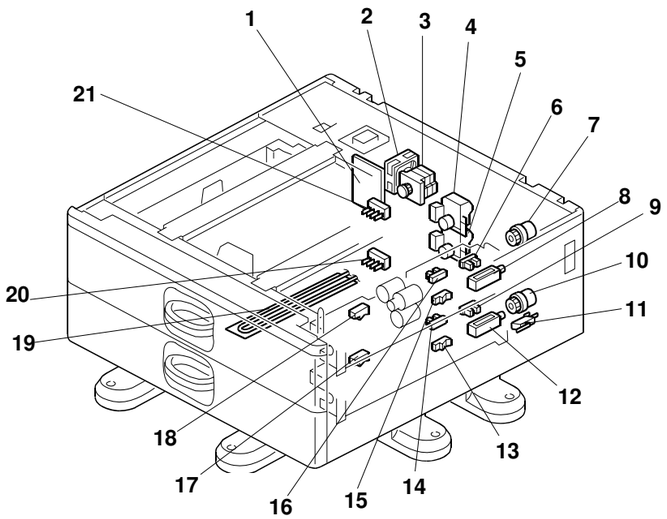

Symbol	Name	Index No.	P to P
Motors			
M1	Feed Motor	3	B9
M2	Upper Tray Lift Motor	4	E9
M3	Lower Tray Lift Motor	5	E9
Sensors			
S1	Upper Paper Feed	18	E3
S2	Upper Vertical Transport	15	E3
S3	Upper Paper End	16	F3
S4	Upper Lift	6	F3
S5	Lower Paper Feed	17	F3
S6	Lower Vertical Transport	13	F3
S7	Lower Paper End	14	G3
S8	Lower Lift	9	G3
Solenoids			
SOL1	Lower Pick-up	8	E3
SOL1	Upper Pick-up	12	F3
Switches			
SW1	Vertical Transport Guide	11	D3
SW2	Upper Paper Size	21	C9
SW3	Lower Paper Size	20	D9
Magnetic Clutches			
MC1	Upper Paper Feed	7	E9
MC2	Lower Paper Feed	10	E9
PCBs			
PCB1	Main Board	1	B6
Others			
H1	Optional Tray Heater	19	C3
Fan			
FAN1	Fan Motor	2	F9

D581 POINT TO POINT DIAGRAM

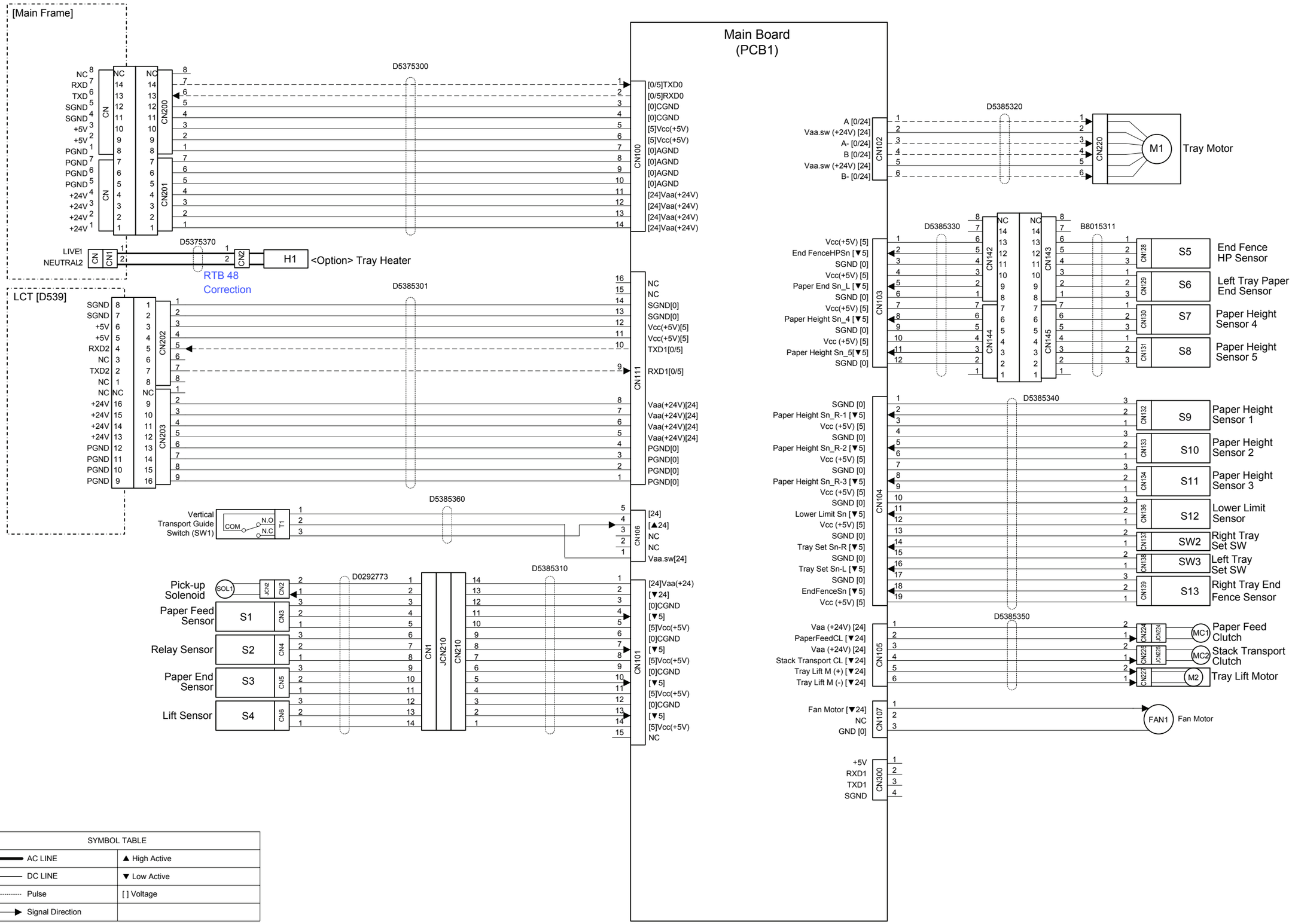

SYMBOL TABLE	
AC LINE	▲ High Active
DC LINE	▼ Low Active
Pulse	[ ] Voltage
Signal Direction	

ELECTRICAL COMPONENT LAYOUT (D581)

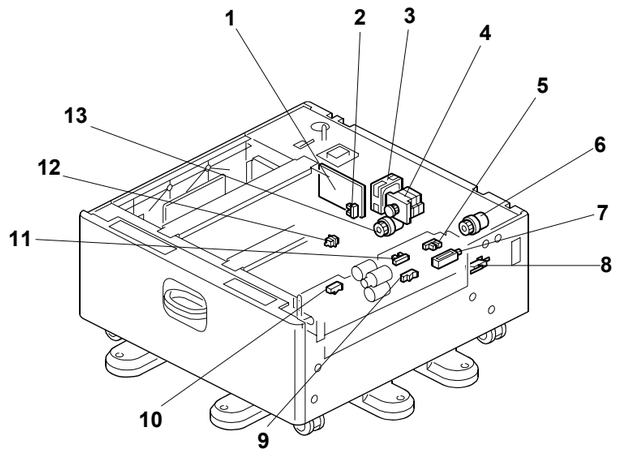

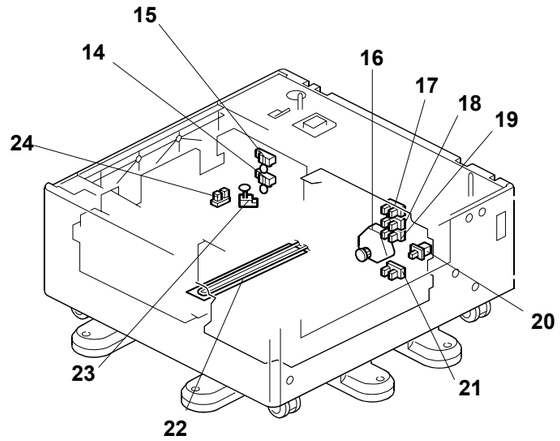

Symbol	Name	Index No.	P to P
Motors			
M1	Tray Motor	4	B9
M2	Tray Lift Motor	16	E9
Sensors			
S1	Paper Feed	10	E3
S2	Relay	9	E3
S3	Paper End	11	F3
S4	Lift	5	F3
S5	End Fence HP	24	C9
S6	Left Tray Paper End	23	C9
S7	Paper Height 4	15	C9
S8	Paper Height 5	14	C9
S9	Paper Height 1	17	D9
S10	Paper Height 2	18	D9
S11	Paper Height 3	19	D9
S12	Lower Limit	21	D9
S13	Right Tray End Fence	2	E9
Solenoids			
SOL1	Pick-up	7	E3
Switches			
SW1	Vertical Guide	8	D3
SW2	Right Tray Set	20	E9
SW3	Left Tray Set	12	E9
Magnetic Clutches			
MC1	Paper Feed	6	E9
MC2	Stack Transport	13	E9
PCBs			
PCB1	Main Board	1	B6
Others			
H1	Optional Tray Heater	22	C3
Fan			
FAN1	Fan Motor	3	F9

D578 POINT TO POINT DIAGRAM

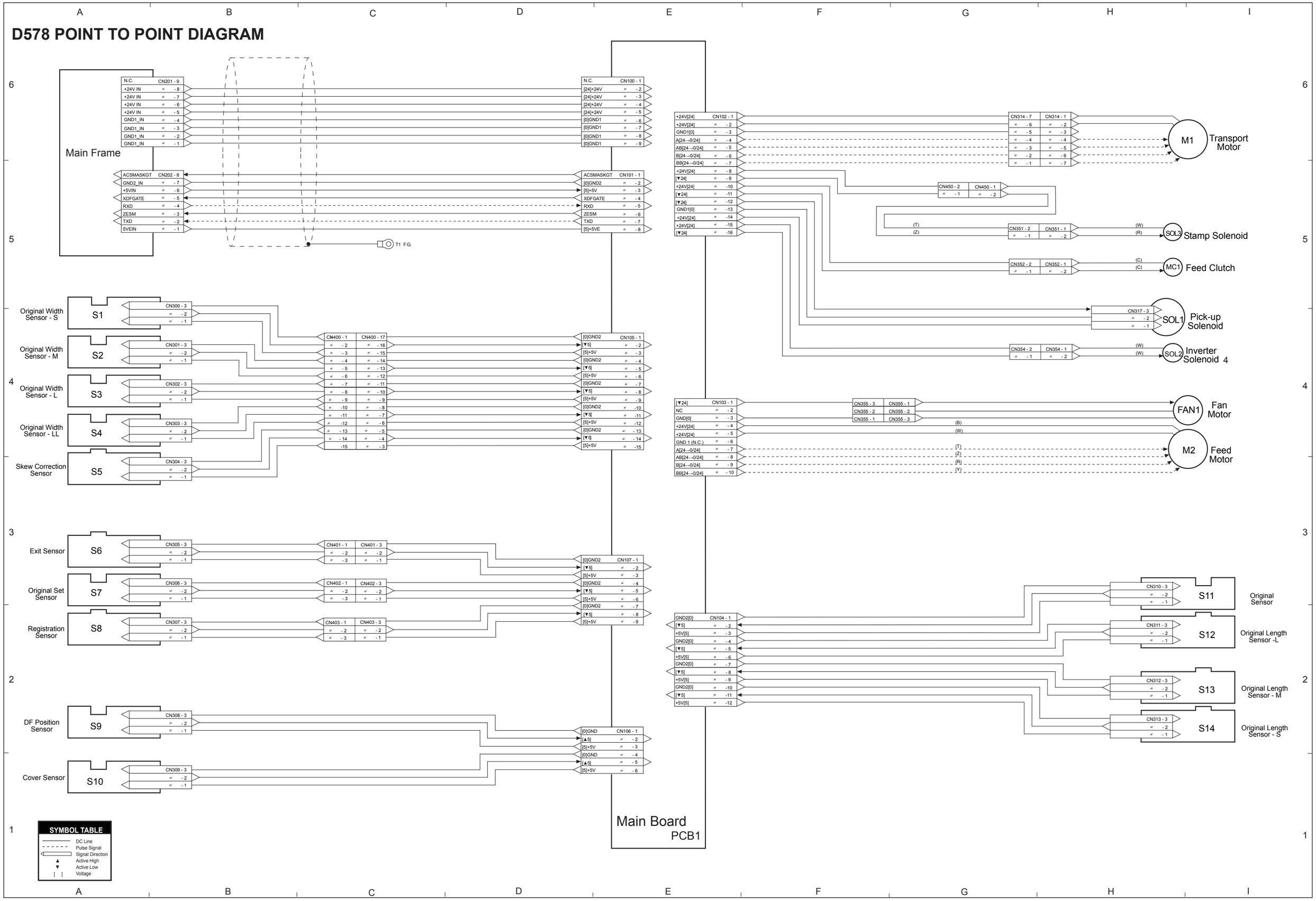

ARDF(D578) ELECTRICAL COMPONENT LAYOUT

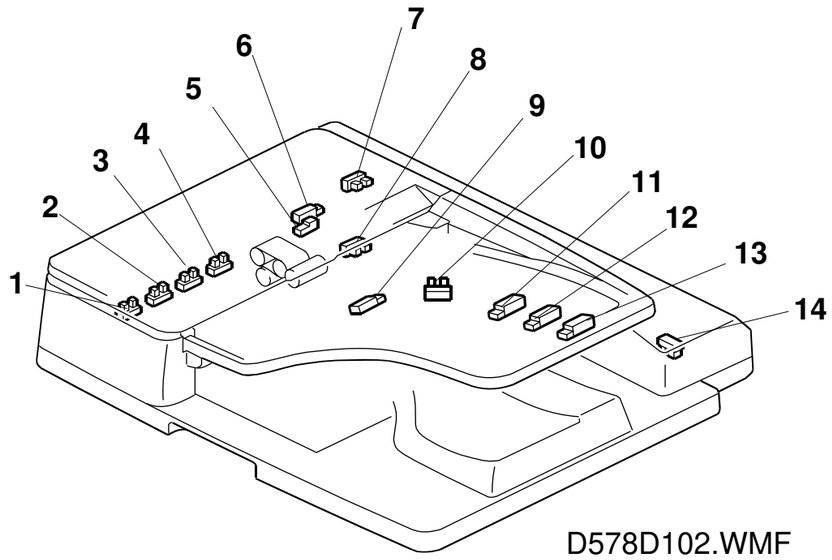

D578D102.WMF

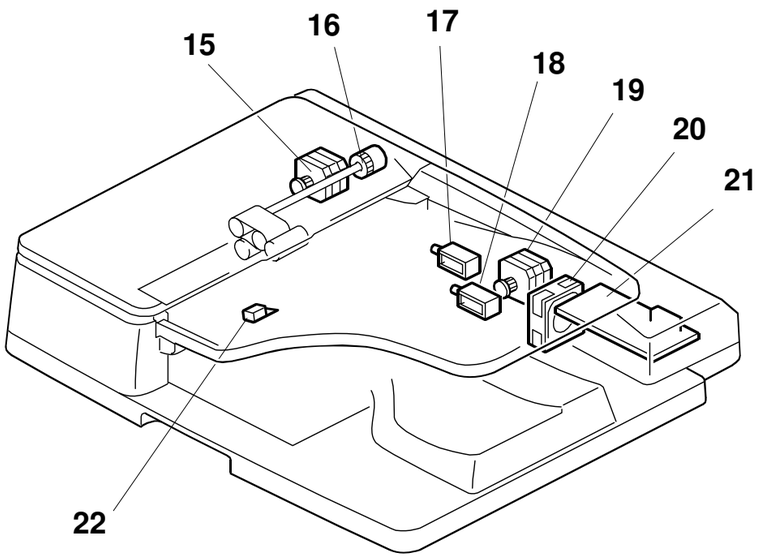

D578D103.WMF

Symbol	Name	Index No.	P to P
Motors			
M1	Transport	15	I6
M2	Feed	19	I4
Sensors			
S1	Original Width S	4	A4
S2	Original Width M	3	A4
S3	Original Width L	2	A4
S4	Original Width LL	1	A4
S5	Skew Correction	5	A3
S6	Exit	9	A3
S7	Original Set	8	A3
S8	Registration	6	A2
S9	DF Position	14	A2
S10	Cover	7	A1
S11	Original	10	I3
S12	Original Length L	13	I2
S13	Original Length M	12	I2
S14	Original Length S	11	I2
Solenoids			
SOL1	Pick-up	17	H4
SOL2	Inverter	18	H4
SOL3	Stamp	22	H5
Magnetic Clutches			
MC1	Feed	16	H5
PCBs			
PCB1	Main Board	21	E1-6
Fan			
FAN1	Fan Motor	20	I4

D582 POINT TO TOINT DIAGRAM

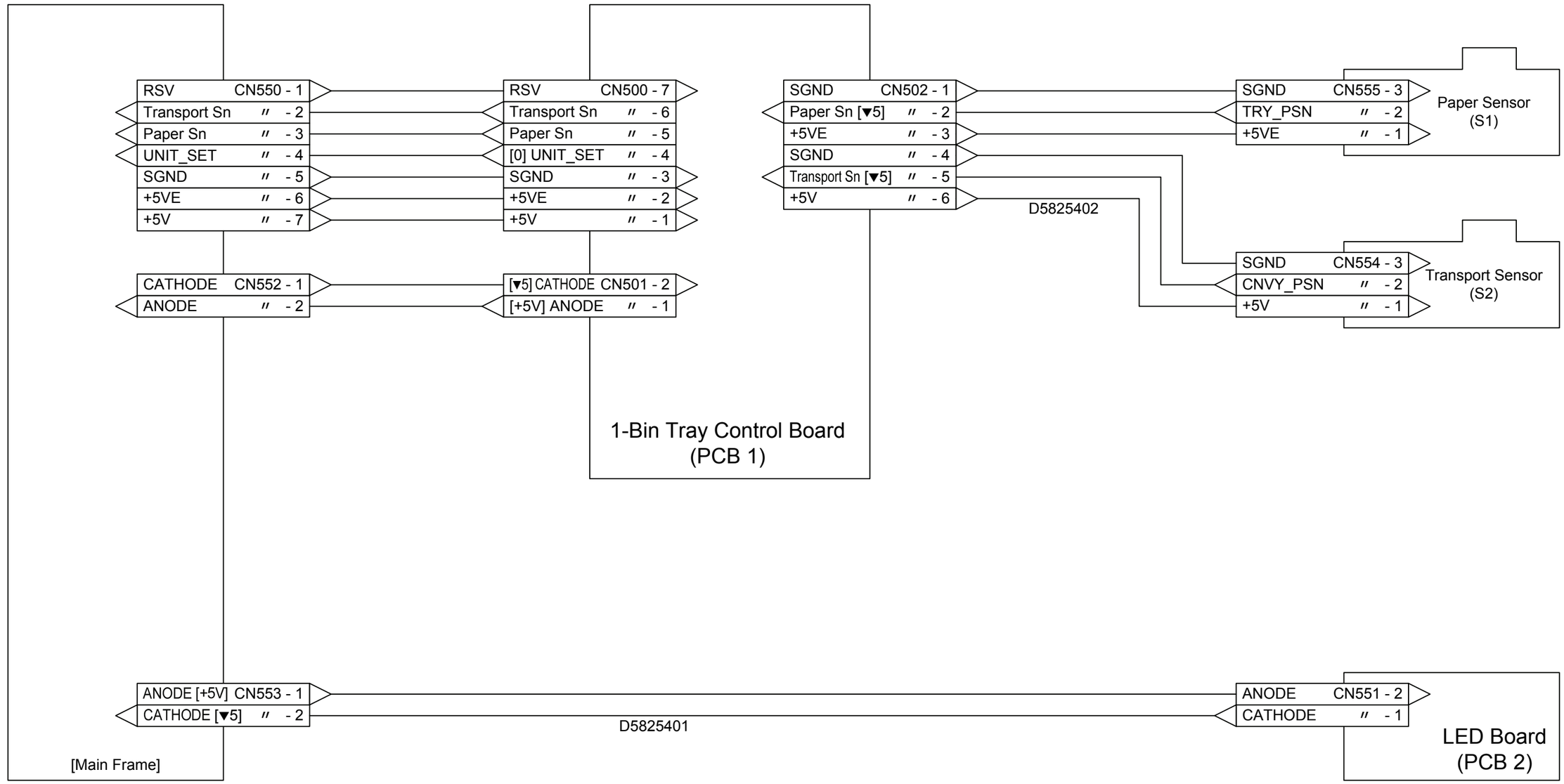

SYMBOL TABLE	
AC LINE	▲ High Active
DC LINE	▼ Low Active
Pulse Signal	[ ] Voltage
Signal Direction	

D582 ELECTRICAL COMPONENT LAYOUT

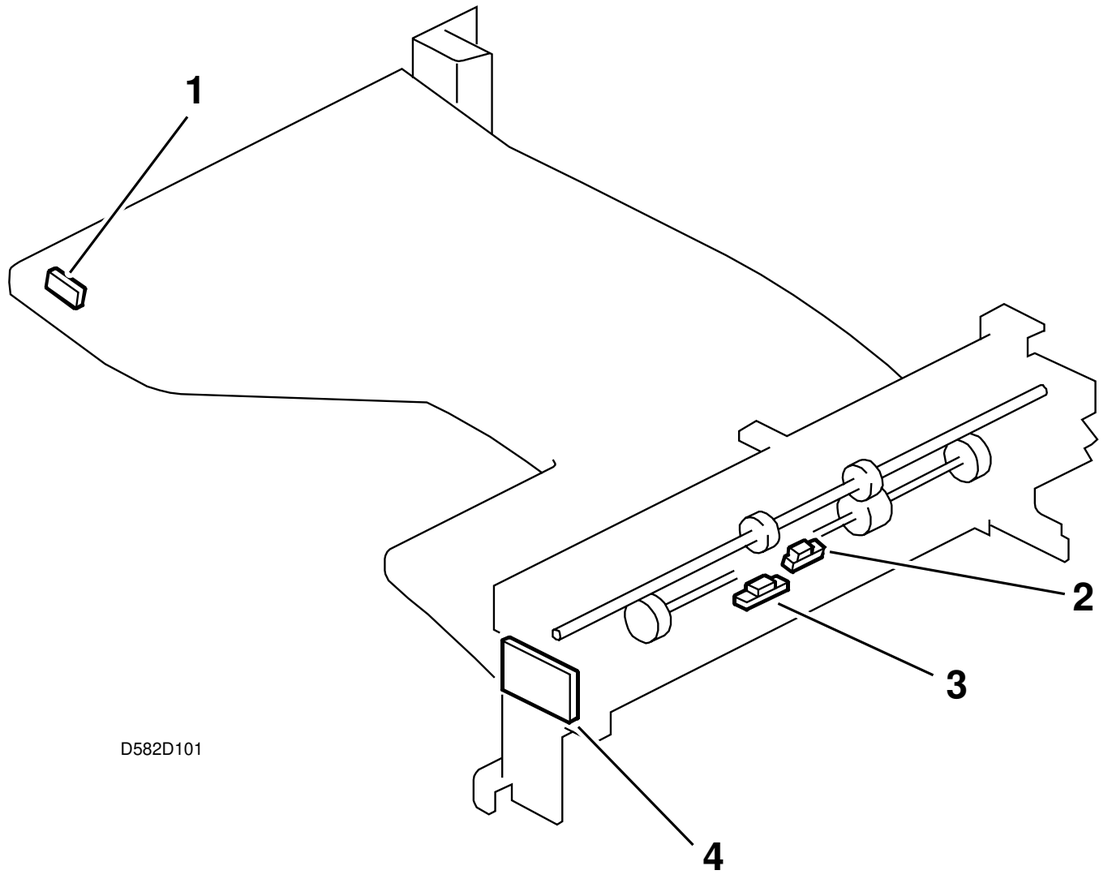

Symbol	Name	Index No.	P to P
PCBs			
PCB1	1-Bin Tray Control Board	4	C5
PCB2	LED Board	1	E10
Sensors			
S1	Paper	3	B10
S2	Transport	2	C10

D583 POINT TO POINT DIAGRAM

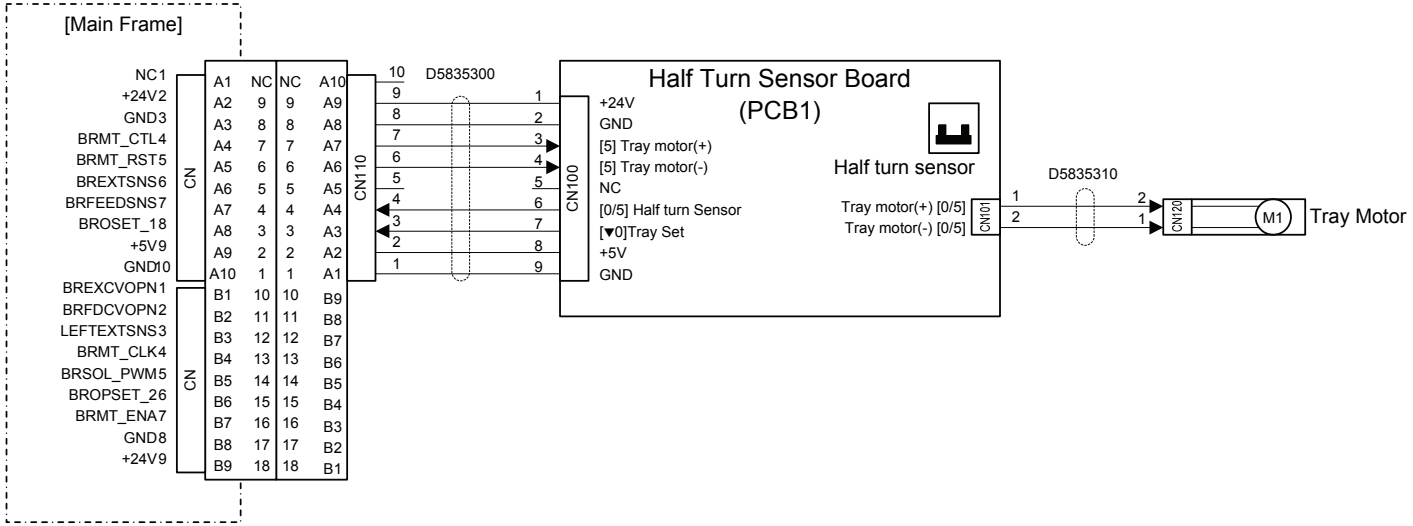

SYMBOL TABLE	
AC LINE	▲ High Active
DC LINE	▼ Low Active
Pulse Signal	[ ] Voltage
Signal Direction	

D583 ELECTRICAL COMPONENT LAYOUT

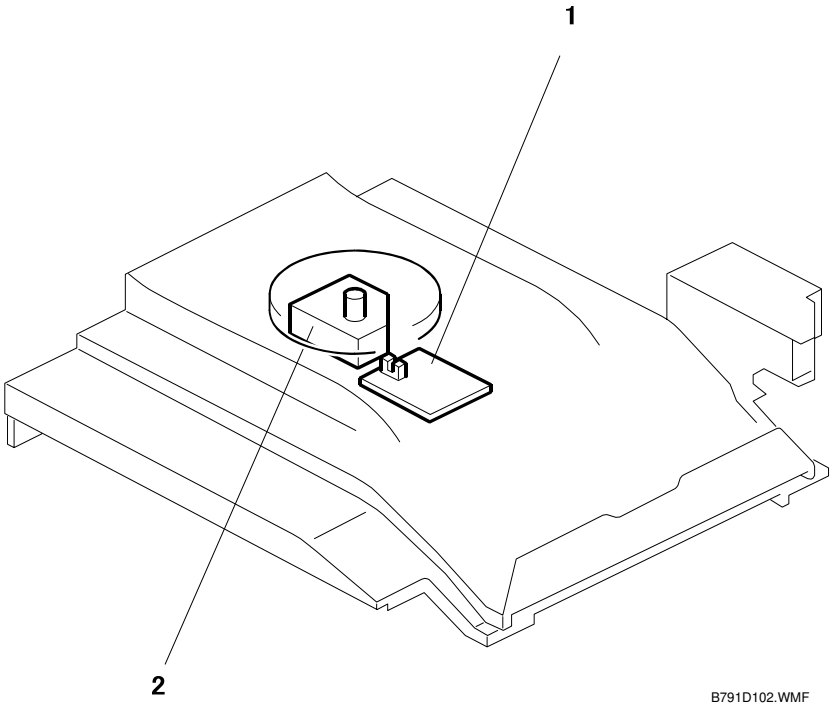

Symbol	Name	Index No.	P to P
Motor			
M1	Tray	2	B5
PCB			
PCB1	Half Turn Sensor Board	1	B3

D584 POINT TO POINT DIAGRAM

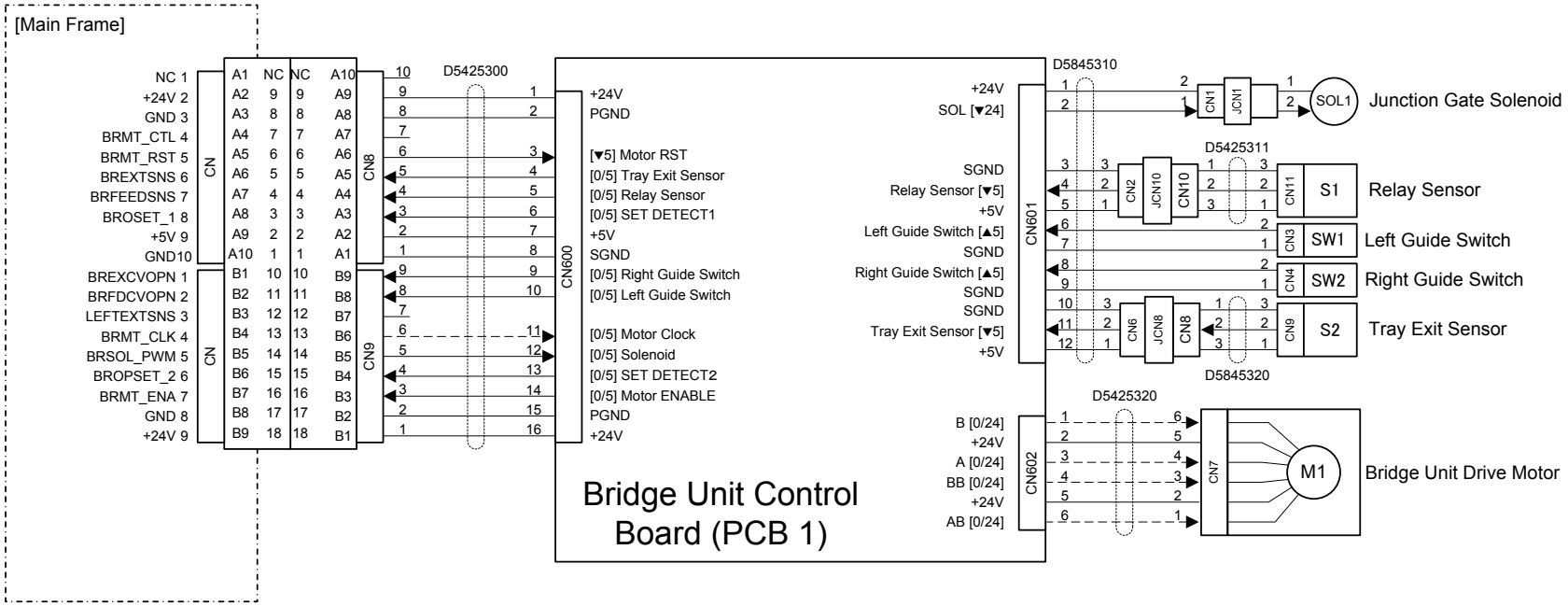

SYMBOL TABLE	
AC LINE	▲ High Active
DC LINE	▼ Low Active
Pulse Signal	[ ] Voltage
Signal Direction	

D584 ELECTRICAL COMPONENT LAYOUT

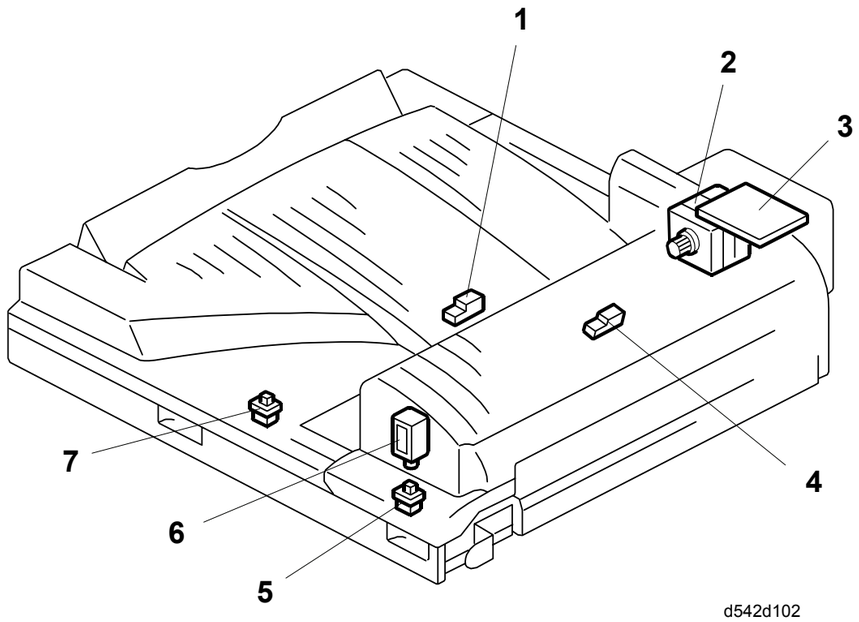

d542d102

Symbol	Name	Index No.	P to P
Motors			
M1	Bridge Unit Drive	2	C6
Sensors			
S1	Relay	1	B6
S2	Tray Exit	4	C6
Switches			
SW1	Right Guide	5	B6
SW2	Left Guide	7	B6
PCBs			
PCB1	Bridge Unit Control	3	C4
Solenoid			
SOL1	Junction Gate	6	B6

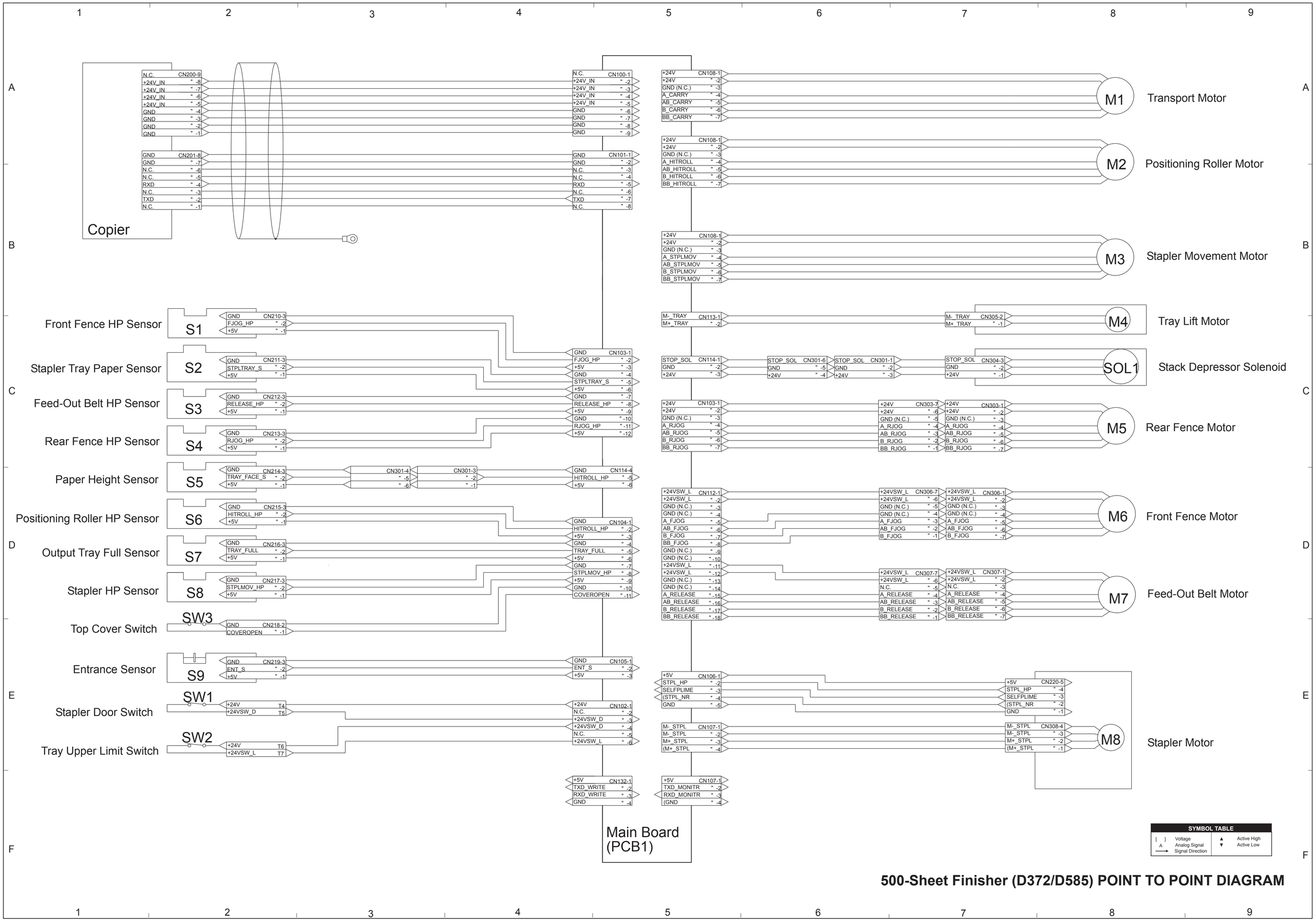

500-Sheet Finisher (D372/D585) POINT TO POINT DIAGRAM

D372/D585 ELECTRICAL COMPONENT LAYOUT

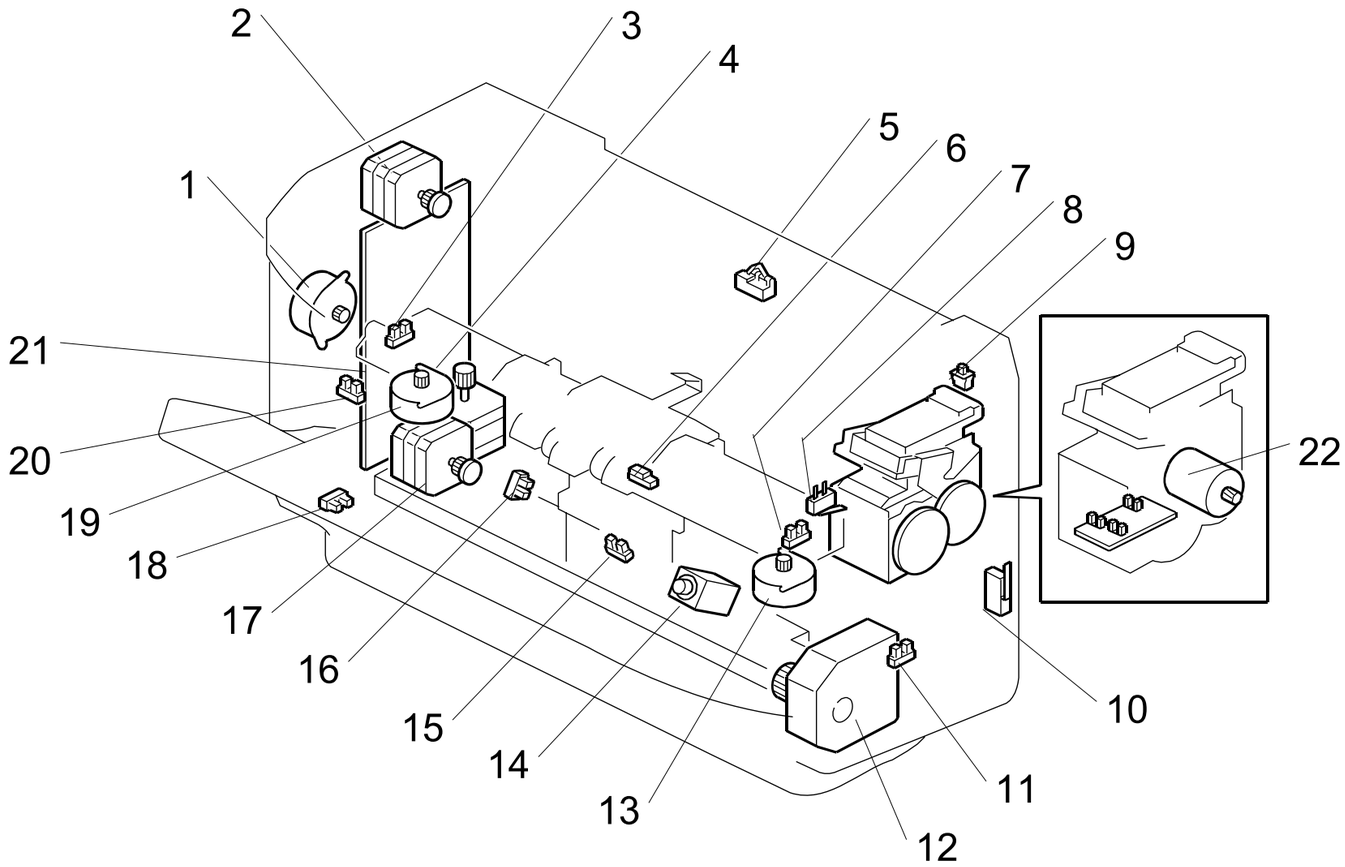

Symbol	Name	Index No.	P to P
Motors			
M1	Transport Motor	2	A8
M2	Positioning Roller Motor	1	A8
M3	Stapler Movement Motor	4	B8
M4	Tray Lift Motor	12	C8
M5	Rear Fence Motor	19	C8
M6	Front Fence Motor	13	D8
M7	Feed-Out Belt Motor	17	D8
M8	Stapler Motor	22	E8
Sensors			
S1	Front Fence HP Sensor	7	C2
S2	Stapler Tray Paper	6	C2
S3	Feed-Out Belt HP	15	C2
S4	Rear Fence HP Sensor	3	C2
S5	Paper Height Sensor	16	D2
S6	Positioning Roller HP Sensor	20	D2
S7	Output Tray Full Sensor	18	D2
S8	Stapler HP Sensor	11	D2
S9	Entrance Sensor	5	E2

Symbol	Name	Index No.	P to P
Switches			
SW1	Stapler Door Switch	10	E2
SW2	Tray Upper Limit Switch	8	E2
SW3	Top Cover Switch	9	E2
Solenoid			
SOL1	Stack Depressor	14	C8
PCB			
PCB1	Main Board	21	F5

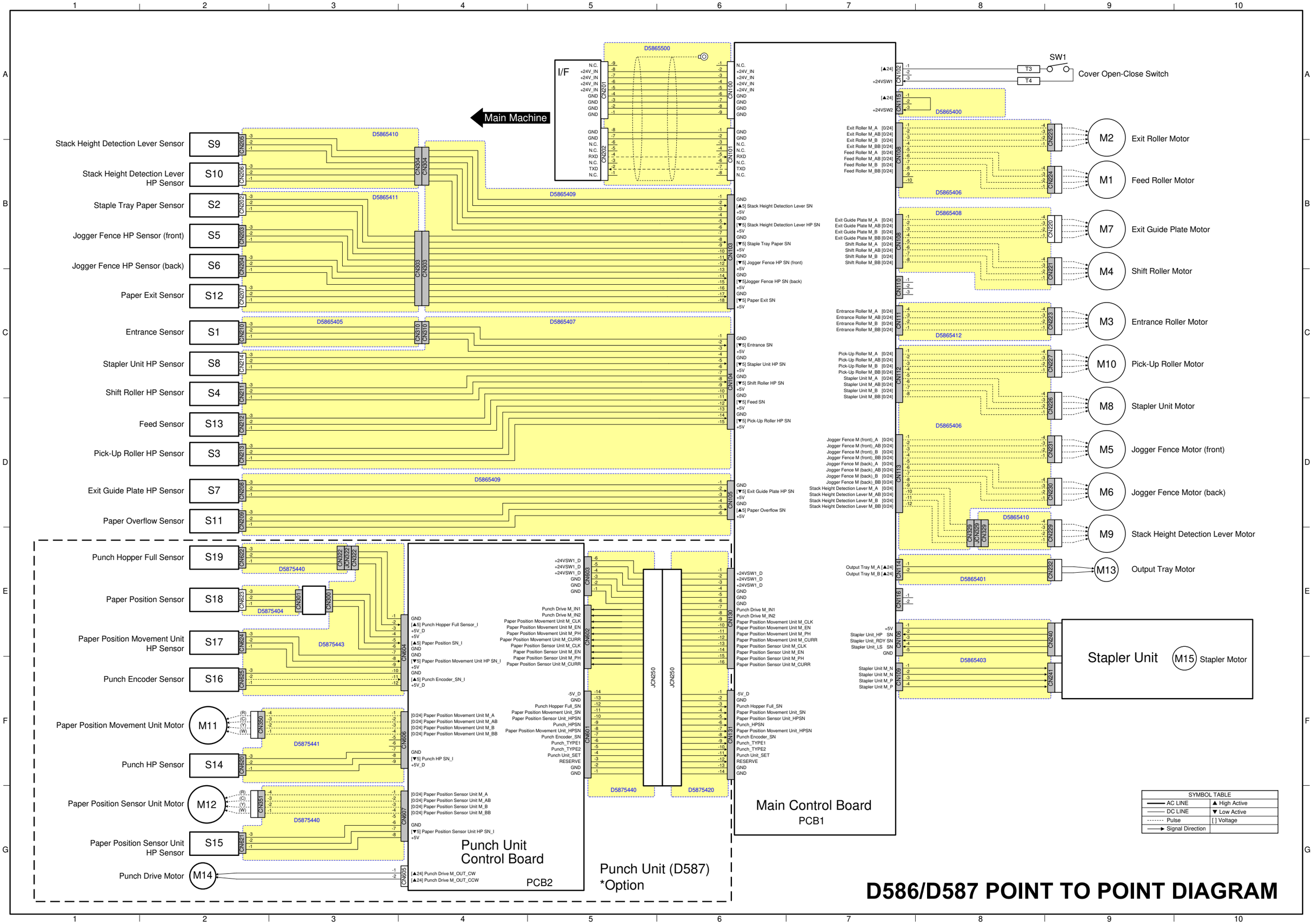

D586/D587 POINT TO POINT DIAGRAM

ELECTRICAL COMPONENT LAYOUT (D586/D587)

D586D151

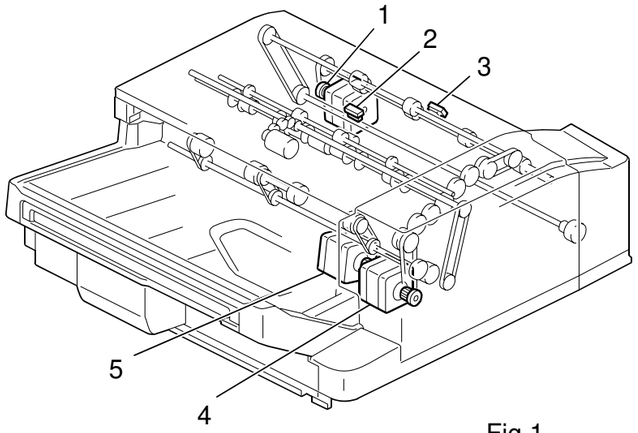

Fig 1

D586D152

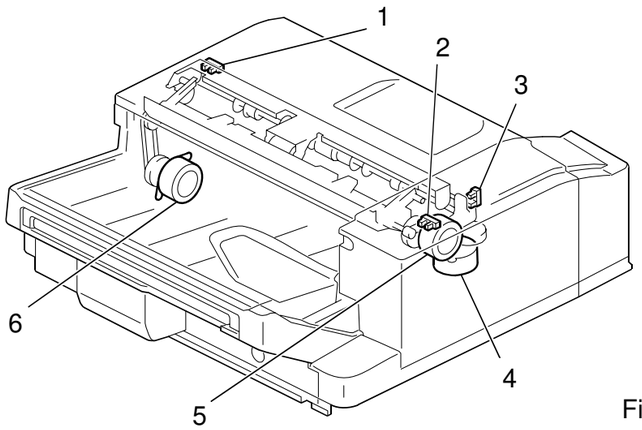

Fig 2

D586D153

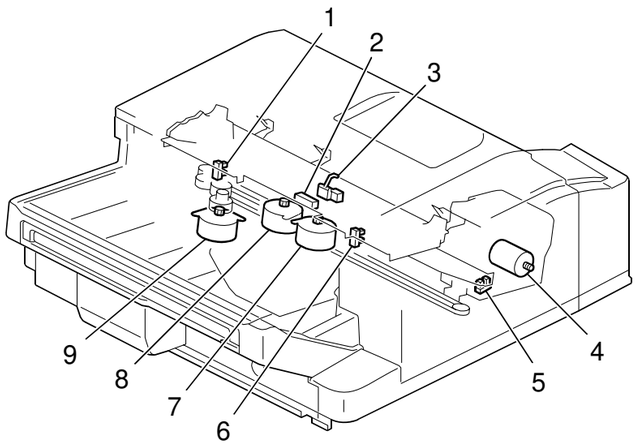

Fig 3

D586D154

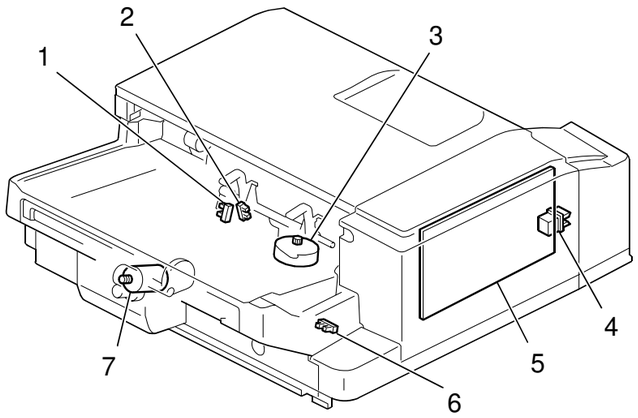

Fig 4

Symbol	Index No.	Descruption	P to P
Motors			
M1	Fig 1-4	Feed Roller Motor	B9
M2	Fig 1-5	Exit Roller Motor	A9
M3	Fig 1-1	Entrance Roller Motor	C9
M4	Fig 2-4	Shift Roller Motor	B9
M5	Fig 3-7	Jogger Fence Motor (front)	D9
M6	Fig 3-8	Jogger Fence Motor (back)	D9
M7	Fig 2-5	Exit Guide Plate Motor	B9
M8	Fig 3-9	Stapler Unit Motor	D9
M9	Fig 4-3	Stack Height Detection Lever Motor	E9
M10	Fig 2-6	Pick-up Roller Motor	C9
M11	Fig 5-10	Paper Position Movement Unit Motor	F2
M12	Fig 5-6	Paper Position Sensor Unit Motor	G2
M13	Fig 4-7	Output Tray Motor	E9
M14	Fig 5-2	Punch Drive Motor	G2
M15	Fig 3-4	Stapler Motor	F9
PCBs			
PCB1	Fig 4-5	Control Board (Main)	A6
PCB2	Fig 5-4	Control Board (Punch)	E4
Sensors			
S1	Fig 1-3	Entrance Sensor	C2
S2	Fig 3-2	Paper Exit Sensor	B2
S3	Fig 2-1	Pick-up Roller HP Sensor	D2
S4	Fig 2-3	Shift Roller HP Sensor	C2
S5	Fig 3-6	Jogger Fence HP Sensor (front)	B2
S6	Fig 3-1	Jogger Fence HP Sensor (back)	B2
S7	Fig 2-2	Exit Guide Plate HP Sensor	D2
S8	Fig 3-5	Stapler Unit HP Sensor	C2
S9	Fig 4-2	Stack Height Detection Lever Sensor	B2
S10	Fig 4-1	Stack Height Detection Lever HP Sensor	B2
S11	Fig 4-6	Paper Overflow Sensor	D2
S12	Fig 3-3	Staple Tray Paper Sensor	C2
S13	Fig 1-2	Feed Sensor	D2
S14	Fig 5-3	Punch HP Sensor	F2
S15	Fig 5-7	Paper Position Sensor Unit HP Sensor	G2
S16	Fig 5-1	Punch Encoder Sensor	F2
S17	Fig 5-9	Paper Position Movement Unit HP Sensor	E2
S18	Fig 5-5	Paper Position Sensor	E2
S19	Fig 5-8	Punch Hopper Full Sensor	E2
Switch			
SW1	Fig 4-4	Cover Open-Close Switch	A8

D587D103

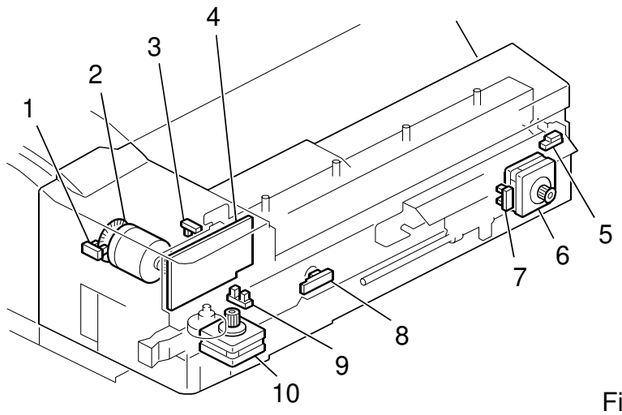

Fig 5

1000-SHEET FINISHER (B408/D588) POINT TO POINT DIAGRAM

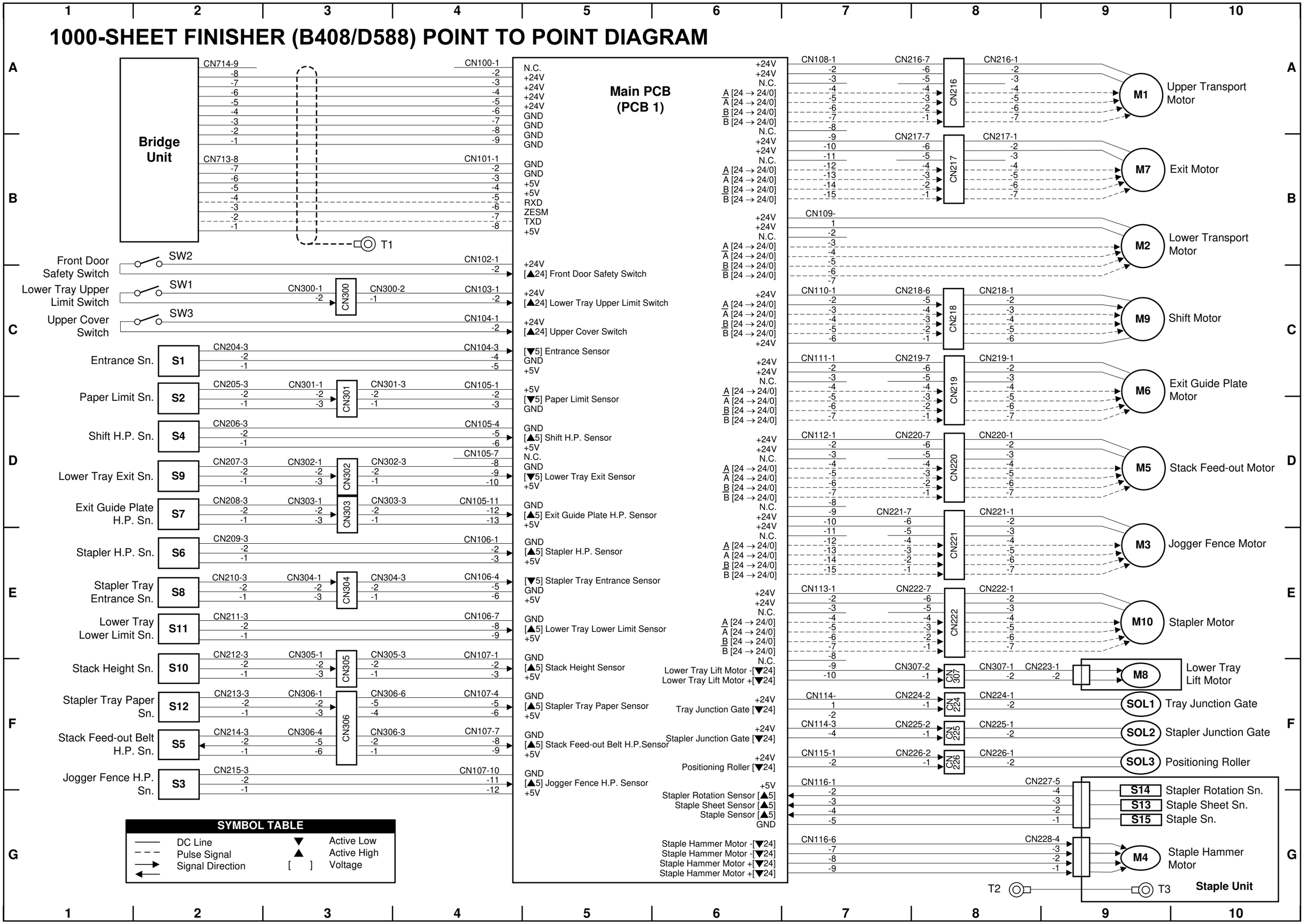

1000-SHEET FINISHER (B408/D588) ELECTRICAL COMPONENT LAYOUT

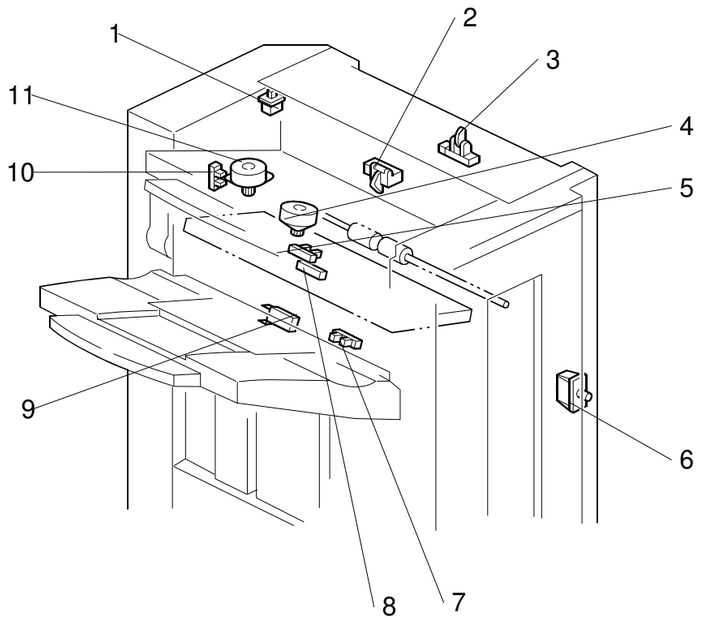

B408D102.WMF

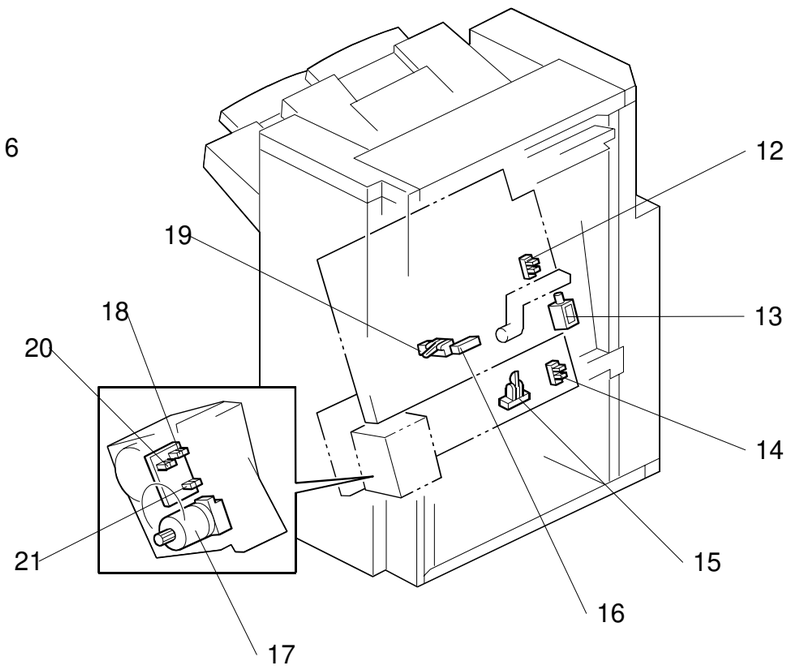

B408D103.WMF

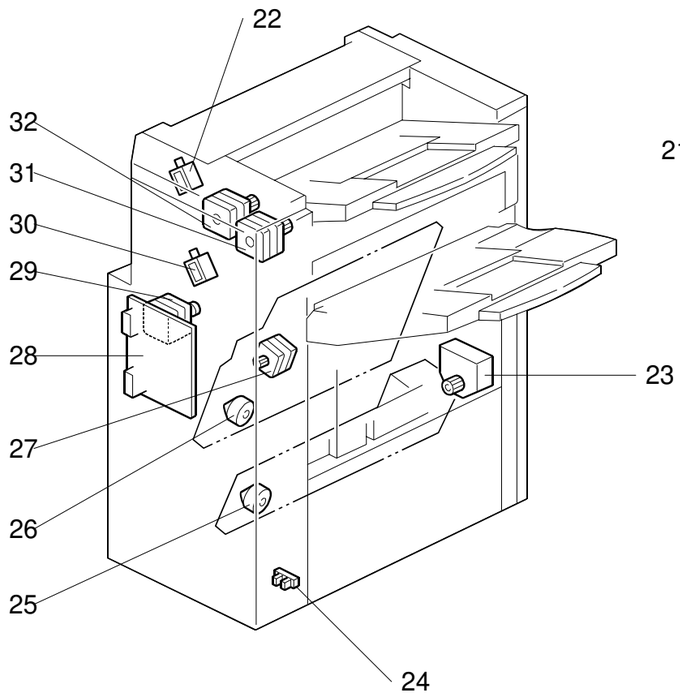

B408D104.WMF

Symbol	Name	Index No.	P to P
Motors			
M1	Upper Transport	32	A9
M2	Lower Transport	29	B9
M3	Jogger Fence	26	E9
M4	Staple Hammer	17	G4
M5	Stack Feed-out	27	D9
M6	Exit Guide Plate	4	C9
M7	Exit	31	B9
M8	Lower Tray Lift	23	F9
M9	Shift	11	C9
M10	Stapler	25	E9
Sensors			
S1	Entrance	3	C2
S2	Paper Limit	2	D2
S3	Jogger Fence HP	12	F2
S4	Shift HP	10	D2
S5	Stack Feed- out Belt HP	19	F2
S6	Staple r HP	14	E2
S7	Exit Guide Plate HP	5	D2
S8	Stapler Tray Entrance	15	E2
S9	Lower Tray Exit	8	D2
S10	Stack Height	7	F2
S11	Lower Tray Lower Limit	24	E2
S12	Stapler Tray Paper	16	F2
S13	Staple Sheet	18	G9
S14	Stapler Rotation HP	20	G9
S15	Staple	21	G9
Solenoids			
SOL1	Tray Junction Gate	22	F9
SOL2	Stapler Junction Gate	30	F9
SOL3	Positioning Roller	13	F9
Switches			
SW1	Lower Tray Upper Limit	9	C2
SW2	Front Door Safety	6	C2
SW3	Upper Cover	1	C2
PCBs			
PCB1	Main	28	A5

B793/D589 Point to Point Diagram

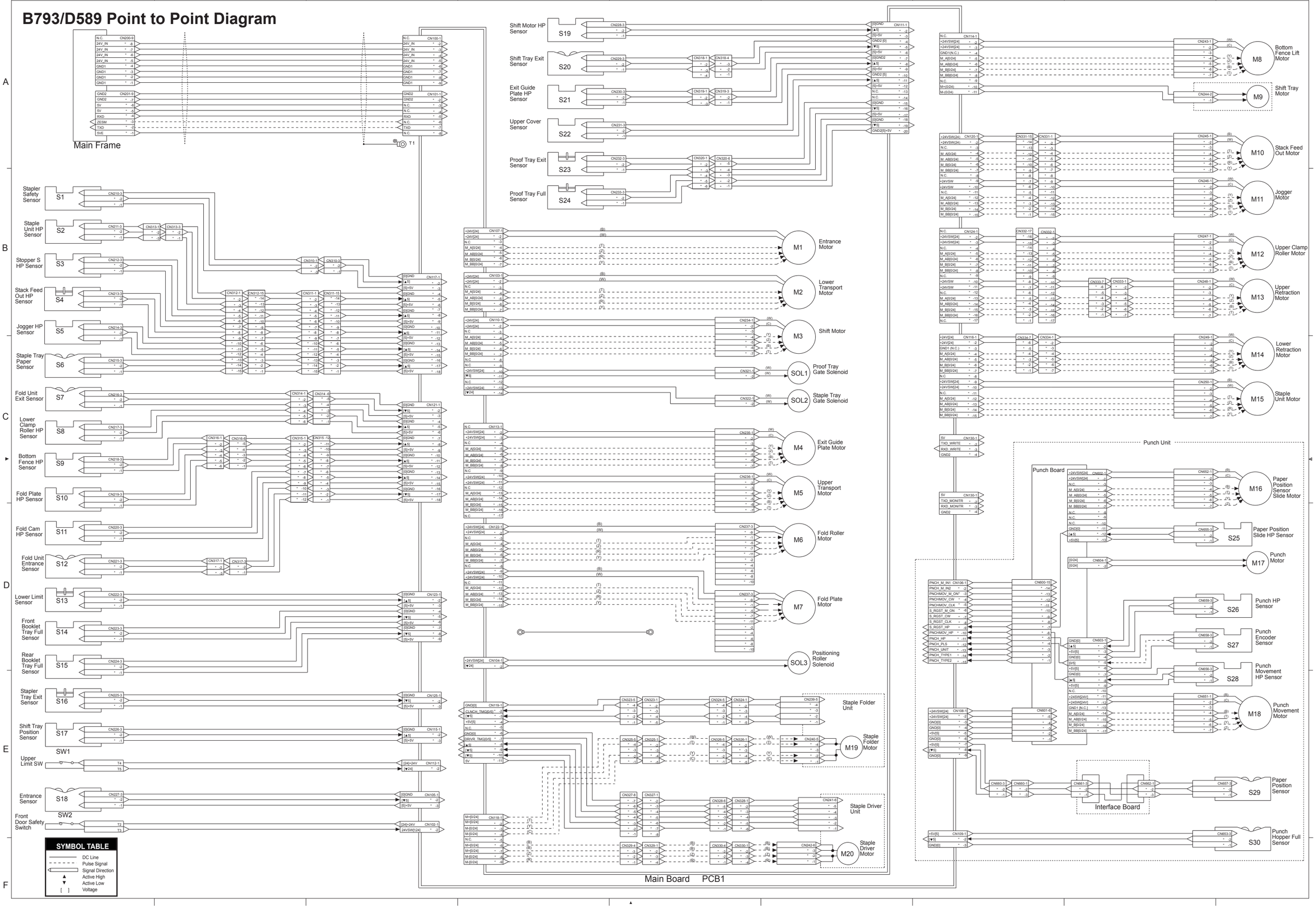

B793/D589 ELECTRICAL COMPONENT LAYOUT

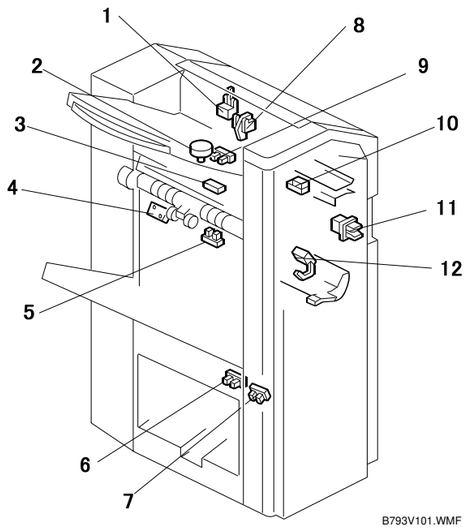

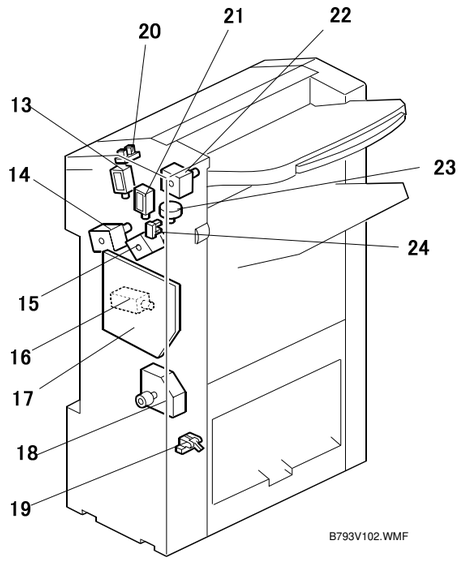

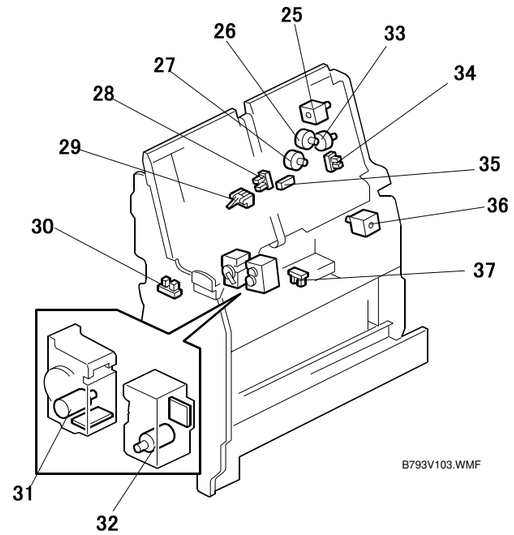

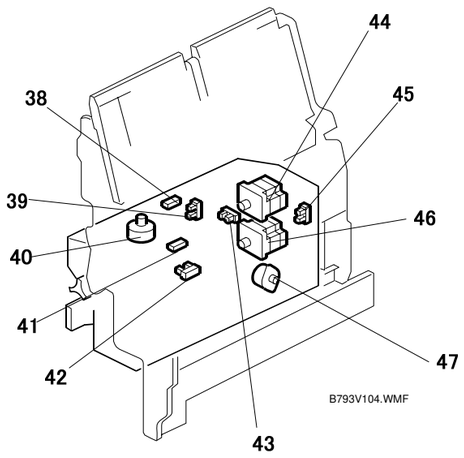

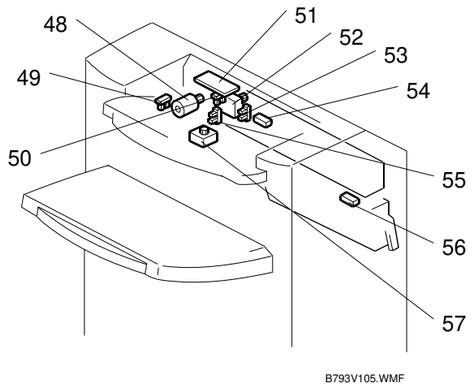

Symbol	Name	Index No.	P-to-P
Motors			
M1	Entrance	15	B6
M2	Lower Transport	14	B6
M3	Shift	23	B6
M4	Exit Guide Plate	2	C6
M5	Upper Transport	22	C6
M6	Fold Roller	44	D6
M7	Fold Plate	46	D7
M8	Bottom Fence Lift	47	A9
M9	Shift Tray	18	A9
M10	Stack Feed Out	25	A9
M11	Jogger	26	B9
M12	Upper Clamp Roller	33	B9
M13	Upper Retraction	27	B9
M14	Lower Retraction	40	C9
M15	Staple Unit	36	C9
M16	Paper Position Sensor Slide	52	C9
M17	Punch	48	D9
M18	Punch Movement	57	E9
M19	Staple Folder	32	E6
M20	Staple Driver	31	F6

Sensors			
S1	Stapler Safety	37	B1
S2	Staple Unit HP	30	B1
S3	Stack S HP	28	B1
S4	Stack Feed Out HP	29	B1
S5	Jogger HP	34	B1
S6	Staple Tray Paper	35	C1
S7	Fold Unit Exit	38	C1
S8	Lower Clamp Roller HP	39	C1
S9	Bottom Fence HP	42	C1
S10	Fold Plate HP	45	C1
S11	Fold Cam HP	43	D1
S12	Fold Unit Entrance	41	D1
S13	Lower Limit	19	D1
S14	Front Booklet Tray Full	7	D1
S15	Rear Booklet Tray Full	6	D1
S16	Stapler Tray Exit	12	E1
S17	Shift Tray Position	5	E1
S18	Entrance	10	E1
S19	Shift Motor HP	24	A4
S20	Shift Tray Exit	3	A4
S21	Exit Guide Plate HP	9	A4
S22	Upper Cover	20	A4
S23	Proof Tray Exit	1	A4
S24	Proof Tray Full	8	B4
S25	Paper Position Slide HP	53	D9
S26	Punch HP	50	D9
S27	Punch Encorder	49	D9
S28	Punch Movement HP	50	E9
S29	Paper Position	54	E9
S30	Punch Hopper Full	56	F9
Solenoids			
SOL1	Proof Tray Gate	13	C6
SOL2	Staple Tray Gate	21	C6
SOL3	Positioning Roller	16	D6
Switches			
SW1	Upper Limit	4	E1
SW2	Front Door Safety	11	E1
PCBs			
PCB1	Main Board	17	A3-F7
PCB2	Punch Board	51	C7-E8