Model S-C3
Machine Code:
B262/B280/B292/B293

SERVICE MANUAL

June 30th, 2006
Subject to change

Safety Notice

⚠ Important Safety Notices

Prevention of Physical Injury

1. Be sure that the power cord is unplugged before disassembling or assembling parts of the copier or peripherals.
2. The wall outlet should be near the copier and easily accessible.
3. Note that electrical voltage is supplied to some components of the copier and the paper tray unit even while the main power switch is off.
4. If you start a job before the copier completes the warm-up or initializing period, keep hands away from the mechanical and electrical components until job execution has started. The copier will start making copies as soon as warm-up or initialization is finished.
5. The inside and the metal parts of the fusing unit become extremely hot while the copier is operating. Be careful to avoid touching those components with your bare hands.

Health Safety Conditions

Toner and developer are nontoxic, but getting either of these into your eyes may cause temporary eye discomfort. Try to remove with eye drops or flush with water. If material remains in eye or if discomfort continues, get medical attention.

Observance of Electrical Safety Standards

The copier and its peripherals must be installed and maintained by a customer service representative who has completed the training course on those relevant models.

⚠WARNING

- ⃠ Keep the machine away from flammable liquids, gases, and aerosols. A fire or an explosion might occur if this precaution is not observed.

Safe and Ecological Disposal

1. Do not incinerate toner bottles or used toner. Toner dust may ignite suddenly if exposed to an open flame.
2. Dispose of used toner, developer, and organic photoconductors in accordance with local regulations. (These are nontoxic supplies.)

3. Dispose of replaced parts in accordance with local regulations.

Laser Safety

The Center for Devices and Radiological Health (CDRH) prohibits the repair of laser-based optical units in the field. The optical housing unit can only be repaired in a factory or at a location with the requisite equipment. The laser subsystem is replaceable in the field by a qualified Customer Engineer. The laser chassis is not repairable in the field. Customer engineers are therefore directed to return all chassis and laser subsystems to the factory or service depot when replacement of the optical subsystem is required.

⚠WARNING

- Use of controls not specified in this manual, or performance of adjustments or procedures not specified in this manual, may result in hazardous radiation exposure.

⚠ WARNING FOR LASER UNIT

⚠WARNING

- Turn off the main switch before attempting any of the procedures in the Laser Unit section. Laser beams can seriously damage your eyes.

CAUTION MARKING:

b262r934

Symbols and Abbreviations

This manual uses several symbols and abbreviations. The meaning of those symbols and abbreviations is as follows:

	See or Refer to
	Clip ring
	E-ring
	Screw
	Connector
	Clamp
SEF	Short Edge Feed
LEF	Long Edge Feed
CT	Core Technology manual

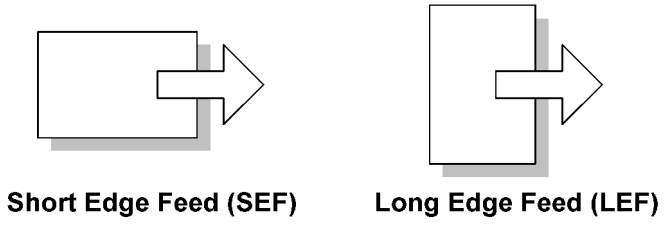

b262v999

Cautions, Notes, etc.

The following headings provide special information:

⚠WARNING

- FAILURE TO OBEY WARNING INFORMATION COULD RESULT IN SERIOUS INJURY OR DEATH.

⚠CAUTION

- Obey these guidelines to ensure safe operation and prevent minor injuries.

Note

- This information provides tips and advice about how to best service the machine.

TABLE OF CONTENTS

Safety Notice....1
⚠ Important Safety Notices....1
Laser Safety....2
Symbols and Abbreviations....3

1. Installation

Installation Cautions....11
Installation Requirements....12
Environment....12
MACHINE LEVEL....12
Minimum Operational Space Requirements....13
Power Requirements....14
Copier....15
Accessory Check....15
Installation Procedure....16
Paper Tray Unit....21
Accessory Check....21
Installation Procedure....21
Paper Tray Unit Heater....23
Accessory Check....23
Installation Procedure....24
ARDF (B872)....31
Accessory Check....31
Installation Procedure....31
DDST Unit (B880/893)....38
Accessory Check....38
Installation Procedure....39

2. Preventive Maintenance

PM Tables....43
How to Clear the PM Counter....45

3. Replacement and Adjustment

Precautions....47
General....47
Halogen-free Cable....47

Special Tools and Lubricants....48
Exterior Covers and Operation Panel....49
Rear Cover....49
Copy Tray....49
Scale Plate....50
Operation Panel and Upper Covers....51
Right Door....52
Bypass Tray....52
Platen Cover Sensor....53
Scanner Unit....54
Exposure Glass....54
Lens Block....55
Exposure Lamp, Lamp Stabilizer Board....55
Scanner Motor....56
Scanner HP Sensor....58
Scanner alignment adjustment....58
Fusing....60
Fusing Unit....60
Exit Sensor....61
Hot Roller Stripper Pawls....61
Hot Roller & Fusing Lamp....62
Thermoswitches and Thermistor....64
Pressure Roller....65
Checking the NIP band....66
PCU and Quenching Lamp....67
PCU....67
Quenching Lamp....68
Exhaust Fan and Main Motor....69
Exhaust Fan....69
Main Motor....70
Paper Feed....71
Paper Feed Roller and Friction Pad....71
Paper End Sensor....72

Registration Sensor....72
Bypass Paper End Sensor....73
Bypass Feed Roller....74
Bypass Feed Clutch and Friction Pad....75
Paper Feed and Registration Clutches....76
Image Transfer....78
Transfer Roller....78
ID Sensor and Duplex Roller....79
Discharge plate....80
BICU and Controller Board....81
BICU....81
Controller Board (B280/B293 models only)....82
Other Replacements....85
Duplex Motor....85
High-Voltage Power Supply Board....86
PSU....87
Contact-Release Solenoid....88
Toner Supply Clutch....88
Laser Unit....90
Location of the Caution Decal....90
Laser Unit....90
LD Unit and Polygon Mirror Motor....91
Adjusting Copy Image Area....92
Printing....92
Scanning....94
DF Image Adjustment....97

4. Troubleshooting

Service Call Conditions....99
Summary....99
SC Code Descriptions....99
Electrical Component Troubleshooting....108
Sensor/Switch Open Errors....108
Blown Fuse Conditions....109

BICU LED Display....110

5. Service Tables

Service Program....111
Using SP and SSP Modes....111
Copier Service Program Mode Tables....113
ID Sensor Error Analysis (SP2-221)....139
Memory Clear....140
INPUT CHECK (SP5-803)....141
OUTPUT CHECK (SP5-804)....143
SERIAL NUMBER INPUT (SP5-811-001)....144
NVRAM DATA UPLOAD/DOWNLOAD (SP5-824/825)....145
Firmware Update Procedure....147
TEST PATTERN PRINT (SP5-902-001)....149
SMC Print (SP5-990)....151
Printer Service Program Mode Table....152
Scanner Service Program Mode Table....152

6. Detailed Section Descriptions

Overview....153
Component Layout....153
Electrical Components....155
Paper Path....157
Drive Layout....158
Block Diagram: PCBs and Components....159
Main PCBs....160
SBU (SENSOR BOARD UNIT)....160
Copy Process....162
Overview....162
Scanning....164
Overview....164
Scanner Drive....165
Image Processing....166
Overview....166
Image Processing Path....167

Original Modes....167
Image Processing Steps for Each Mode....170
Mode Adjustments....171
Laser Exposure....172
Overview....172
LD Safety Switches....173
Photoconductor Unit (PCU)....174
Overview....174
DRUM Drive....175
Drum Charge....176
Overview....176
Charge Roller Voltage Correction....177
Charge Roller Cleaning....178
Detection of New PCU....178
Development....180
Overview....180
Development Bias....181
Toner Supply....181
Toner density control....182
Toner Supply If Sensor Reading is abnormal....183
Detection of Toner Near End and Toner End....184
Drum Cleaning and Toner Recycling....185
Paper Feed....186
Overview....186
Paper Feed Drive Mechanism....187
Paper Feed and Separation....189
Paper Lift Mechanism....189
Paper End Detection....190
Image Transfer and Paper Separation....192
Overview....192
Image Transfer Current Timing....192
Transfer Roller Cleaning....193
Image Fusing and Paper Exit....194

Overview....194
Hot Roller Drive....195
Pressure Roller....196
Pressure Release....196
Separation....197
Fusing Temperature Control....197
Duplex Unit....201
Important Components....201
Duplex Printing Process....202
Energy Saver Modes....205
Overview....205
AOF....206
Timers....206
Recovery....206
GDI Controller....207
Overview....207
Controller Functions....209
Scanner Functions....210
Network Interface....211
USB....212
NVRAM on the GDI Controller....214

7. Specifications

General Specifications....215
Copier....215
Printer....217
Scanner....218
ARDF....218
Paper Tray Unit....219
Supported Paper Sizes....221
Original Paper Sizes....221
Paper Feed....222
Machine Configuration....225
Basic Model (B262/B292)....225

GDI Model (B280/B293).....226

1. Installation

Installation Cautions

⚠CAUTION

- **Before installing an optional unit, do the following:**
  - If there is a printer option on the machine, print out all data in the printer buffer.
  - Turn off the main switch and disconnect the power cord, the telephone line, and the network cable.

Installation Requirements

1

Environment

–Temperature and Humidity Chart–

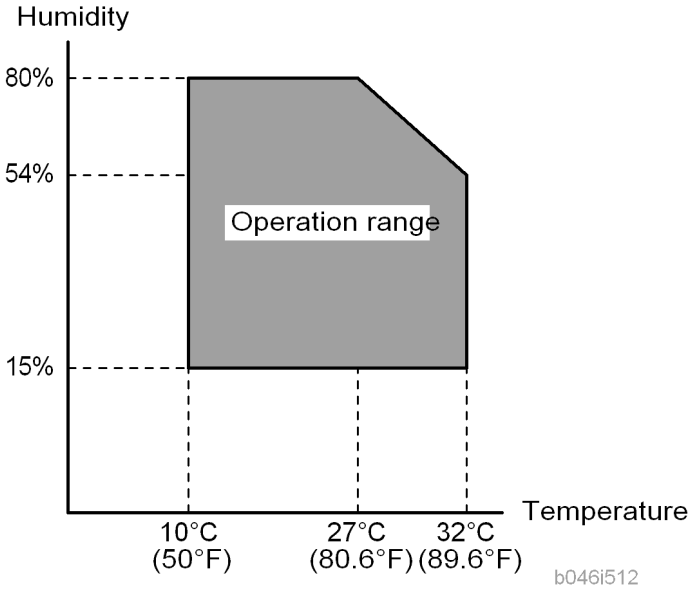

- Temperature Range: 10°C to 32°C (50°F to 89.6°F)
- Humidity Range: 15% to 80% RH
- Ambient Illumination: Less than 1,500 lux (Do not expose to direct sunlight.)
- Ventilation: Room air should turn over at least 3 times/hr/person
- Ambient Dust: Less than 0.1 mg/m^3
- Do not install the machine where it will be exposed to direct sunlight or to direct airflow (from a fan, air conditioner, air cleaner, etc.).
- Do not install the machine where it will be exposed to corrosive gas.
- Place the machine on a firm and level base.
- Do not install the machine where it may be subjected to strong vibration.

MACHINE LEVEL

Front to back:	Within 5 mm (0.2") of level

Right to left:	Within 5 mm (0.2") of level

Minimum Operational Space Requirements

Place the machine near the power source, providing clearance as shown.

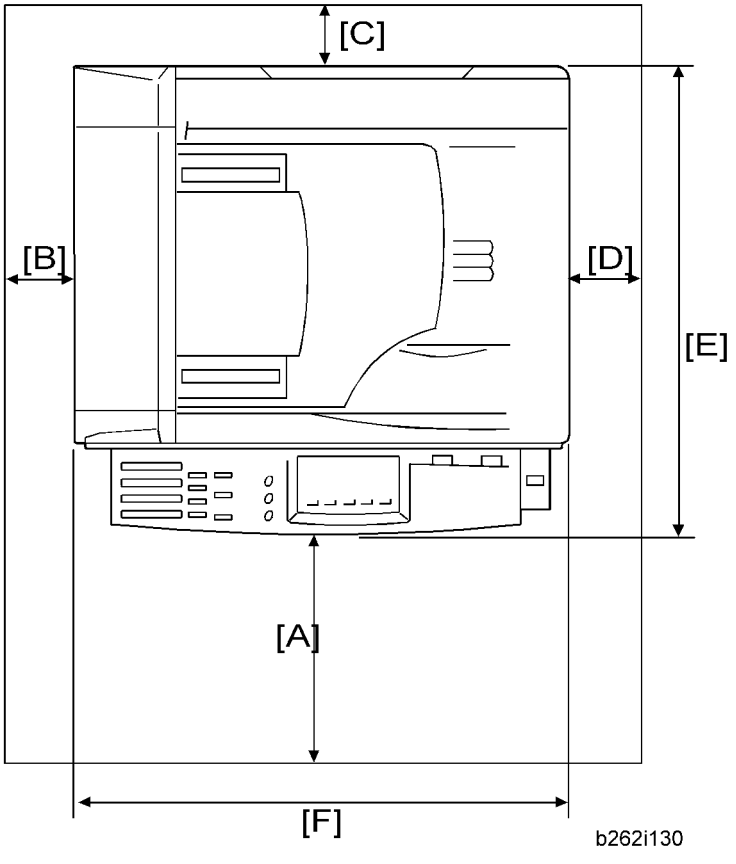

A: Front – 750 mm (29.6")
B: Left – 100 mm (3.9")
C: Rear – 105 mm (4.1")
D: Right – 230 mm (9.0")
E: Depth – 450 mm (17.7")
F: Width – 485 mm (19.1")

Note

- The 750-mm front space indicated above is sufficient to allow the paper tray to be pulled out. Additional space is required to allow an operator to stand at the front of the machine.

- Actual minimum space requirement for left, rear, and right sides is 10mm (0.4") each, but note that this will not allow room for opening of the bypass tray, right door, platen cover, or ARDF unit.

Power Requirements

⚠CAUTION

- Make sure that the wall outlet is near the machine and easily accessible. After completing installation, make sure the plug fits firmly into the outlet.
- Avoid multiple connections to the same power outlet.
- Be sure to ground the machine.

Input voltage:

North America:	110 – 120 V, 60 Hz, 8 A
Europe:	220 – 240 V, 50/60 Hz, 4 A

Image quality guaranteed at rated voltage ± 10%.

Operation guaranteed at rated voltage ± 15%.

Copier

Accessory Check

Basic Model

Description	Q'ty
CD-ROM (Copy Reference) (-17)	1
CD-ROM (Printer Reference/Scanner Reference/Copy Reference) (-21)	1
About This Machine (-17)	1
Troubleshooting (-17)	1
Language Kit (-26)	1
EU Safety Sheet (-26, -67)	1
NECR (-17)	1
CCC Decal (-21)	1
Paper Size Decal	1
Warranty Sheet (Chinese) (-21)	1
Sheet - Name - Tel (-21)	1

GDI Model

Description	Q'ty
General Settings Guide (-29)	1
Copy Reference (-29)	1
Quick Copy Guide (-29)	1
Quick Printer/Scanner Guide (-29)	1
CD-ROM (Printer Reference/Scanner Reference) (-26, -67)	1

CD-ROM (Driver: Printer/Scanner and Printer Reference/Scanner Reference) (-29)	1
EU Safety Sheet (-26, -67)	1
NECR (-17)	1
Paper Size Decal	1
Sheet - EULA (-26, -29, 67)	1
Caution Decal (-26, -29, 67)	1
Ferrite Core (B293-26, B293-67)	1

Installation Procedure

⚠CAUTION

- Make sure that the copier remains unplugged during installation.

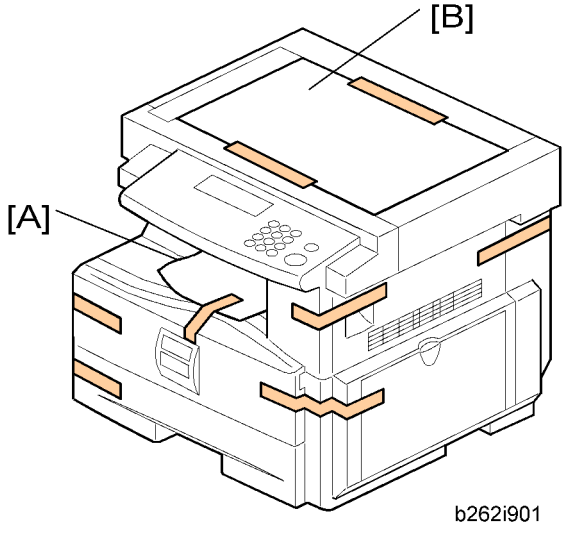

1. Remove the strips of tape.
2. Remove the bag [A], SMC and A3 sheet of paper [B] on the exposure glass.

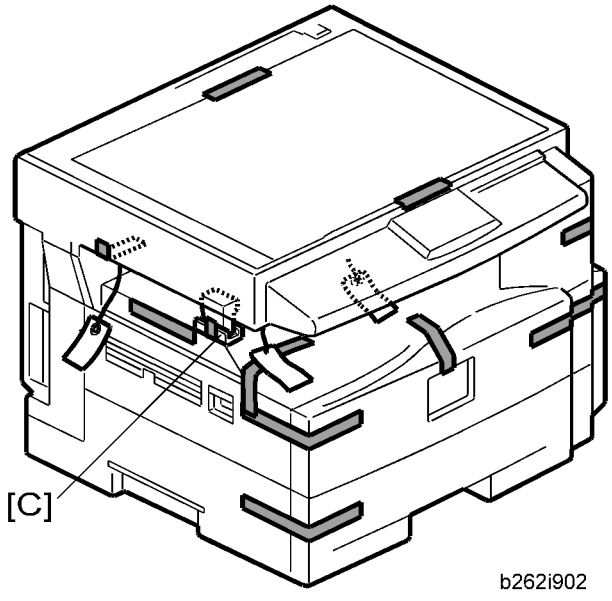

3. Remove the spacing wedge [C].

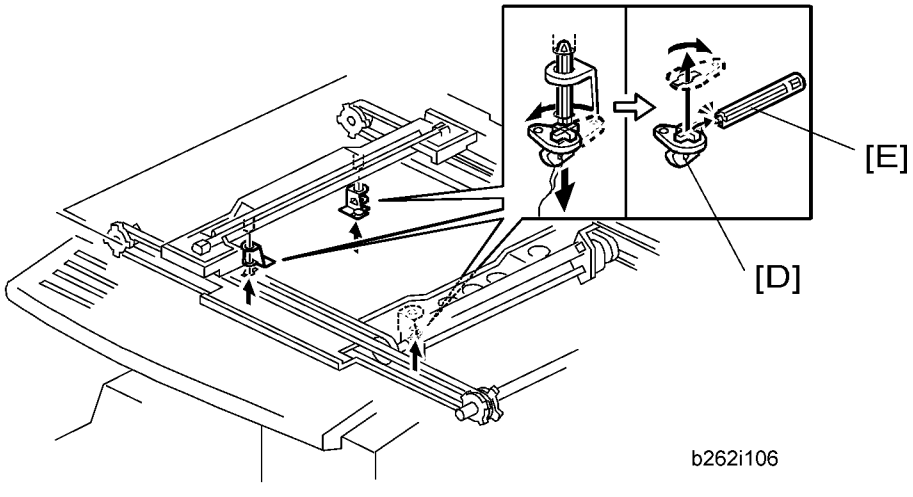

4. Remove the three scanner lock pins. (A tag is hanging from each pin.) To remove: Grasp the base of the pin [D], turn the pin 90 degrees, and pull it down and out.
5. Remove the tags from the pins.
6. Break each pin off the base [D].
7. Discard the pin part [E].
8. Set each base [D] back into its original hole, turning it 90° to lock it into place. (Be sure to do this for all three pins.)

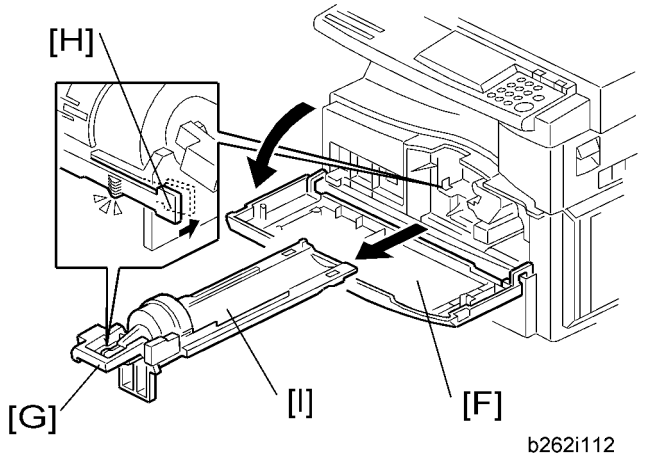

9. Open the front door [F].
10. Lift lever [G], press in on latch [H] and pull the bottle holder [I] out. (You do not need to pull it completely out of the machine.)
11. Take a new bottle of toner, and shake it several times.

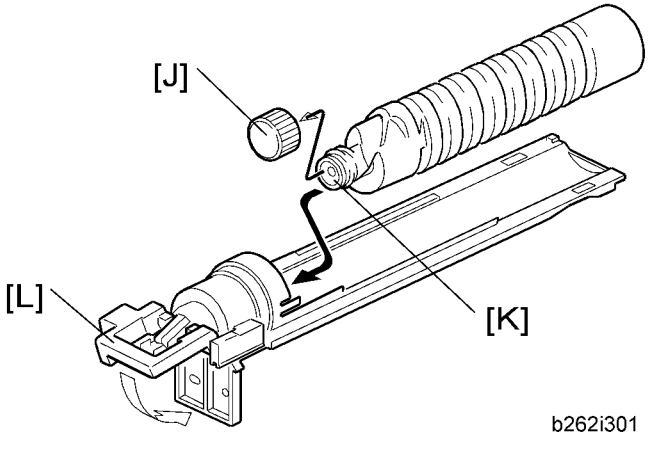

12. Remove the outer cap [J].

Note

- Do not remove the inner cap [K].

13. Load the bottle on the holder.

Note

- Do not forcefully turn the toner bottle on the holder. After you turn on the main power switch, the copier sets the bottle in place.

14. Push the bottle holder back into the machine.
15. Press the latch [L] down to lock the holder.

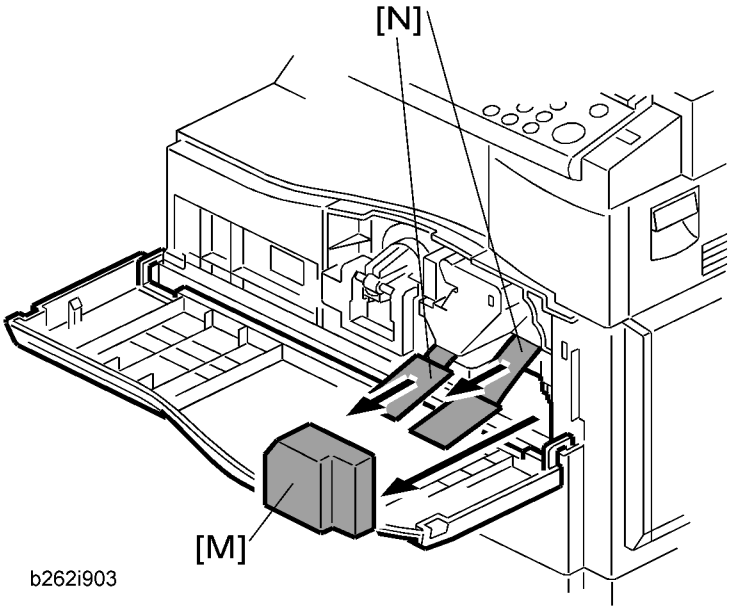

b262i903

16. Remove the padding [M].
17. Pull each tabbed strip [N] out of the PCU with one hand, supporting the PCU with the other.

Note

- Do not pull both strips at the same time, as this could damage the PCU.

18. Close the front door.

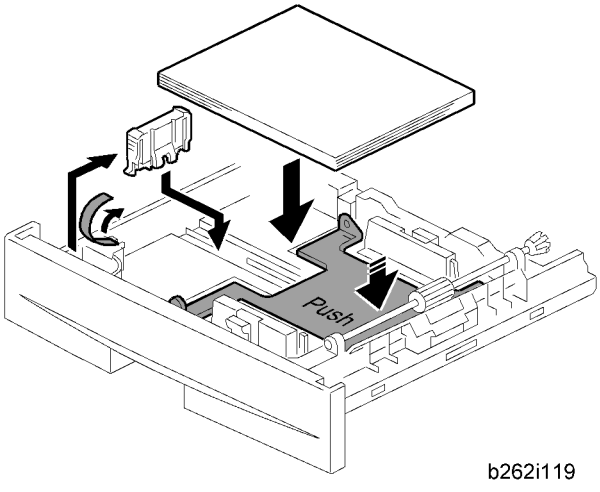

b262i119

19. Pull out the paper tray, and remove the tape securing the end fence in the compartment.
20. Push the bottom plate down, and then load the paper.
21. Adjust the side fences. If you load paper shorter than A4, set the end fence in the correct position.

22. Push the tray back into the copier.

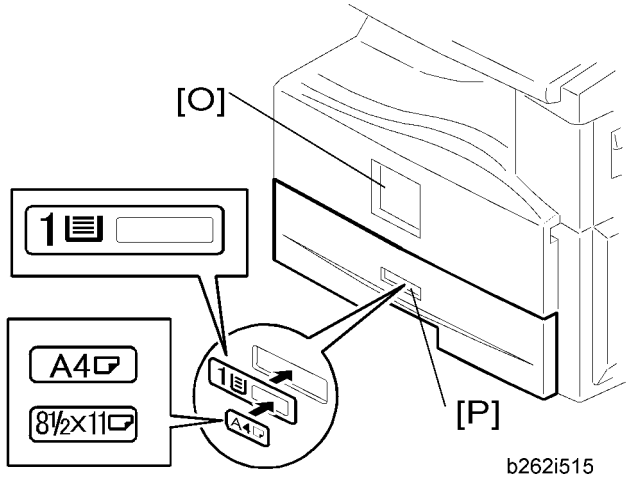

23. Attach the appropriate Brand Decal to the center [O] of the front door if necessary.
24. Attach the appropriate tray number decal and paper-size decal to the paper tray [P].
25. Install optional units (if any).

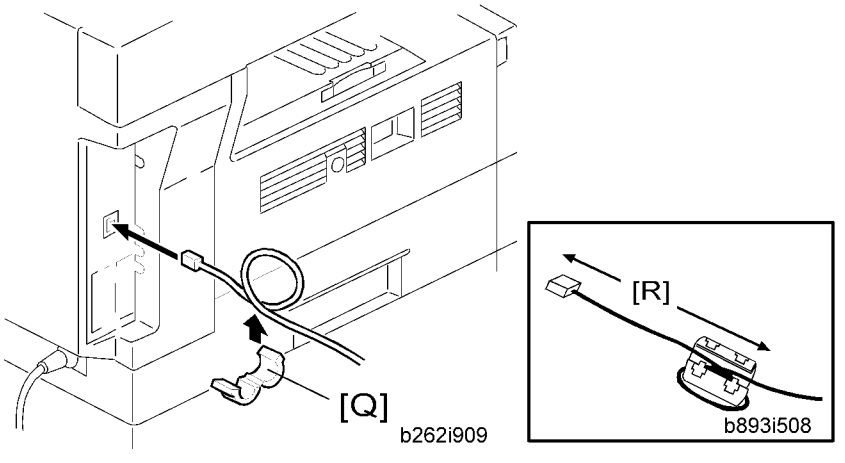

26. **For B293 only:** Attach the ferrite core [Q] to the network cable when connecting the cable.

Note

- The end of the ferrite core must be about 10 cm (4") from the end [R] of the cable.

27. Plug in the machine and turn on the main power switch.
28. Select the language used in the operation panel as necessary (> Language).
29. Make a full size copy, and check if the side-to-side and leading edge registrations are correct. If they are not, adjust the registrations.

Paper Tray Unit

Accessory Check

Confirm that you have these accessories.

Description	Q'ty
1. Paper-size decals	1 sheet
2. Installation Procedure (for service person)	1
3. Installation Procedure (for user)	1

Installation Procedure

⚠CAUTION

- Unplug the main machine's power cord before starting the following procedure.

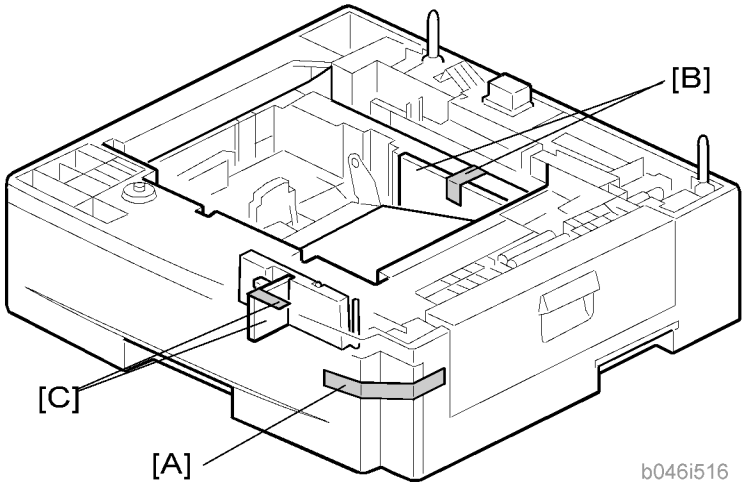

1. Remove the tape at [A], and the tape and cardboard at [B].
2. Pull the paper tray part way out of the unit, remove the tape and cardboard at [C], and push the tray back in.

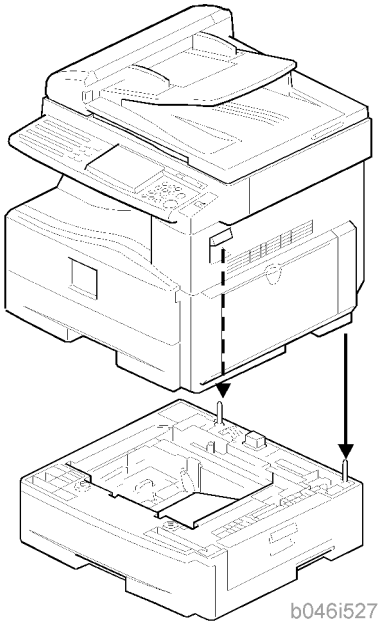

b046i527

3. Set the machine on the paper tray unit.
4. Remove the paper tray from the paper tray unit.
5. Load paper into the paper tray. Adjust the side and end fences as necessary. If loading $8^1/_2$"x 14" paper, remove the end fence and set it into the special compartment.
6. Set the paper tray back into the paper tray unit.

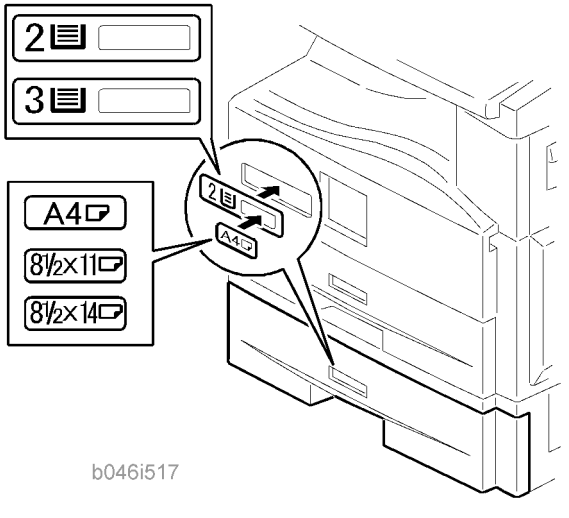

b046i517

7. Stick on the appropriate tray-number decal and paper-size decal, at the locations indicated in the illustration.

Paper Tray Unit Heater

Accessory Check

Confirm that you have the accessories listed below.

Description	Q'ty
1. Grounding wire	1
2. Relay harness	1
3. Clamps	2
4. Ferrite core	1
5. Heater fastening screws	2
6. PTU fastening screws	3
7. Grounding screw	1
8. Decal for copier	1
9. Decal for paper unit	1
10. Tie wrap	1

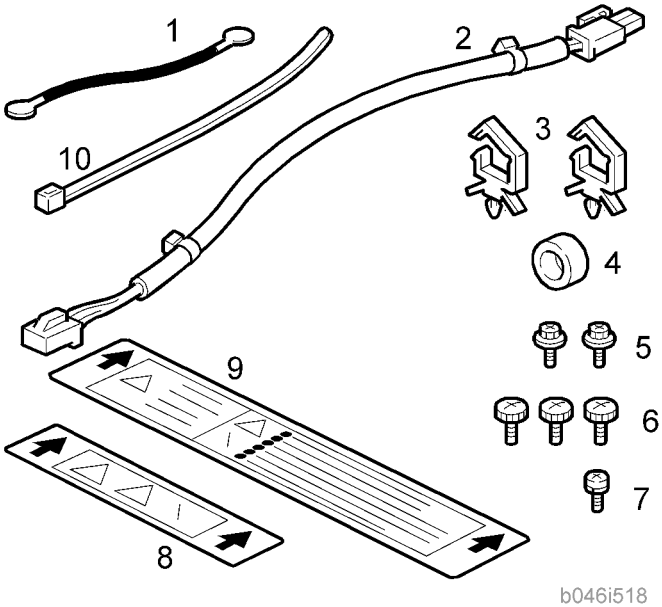

b046i518

Installation Procedure

⚠CAUTION

- Unplug the main machine's power cord before starting the following procedure.

1. Remove the paper tray unit from the copier if it is already installed.
2. Remove the paper trays from the copier and from the paper tray unit.

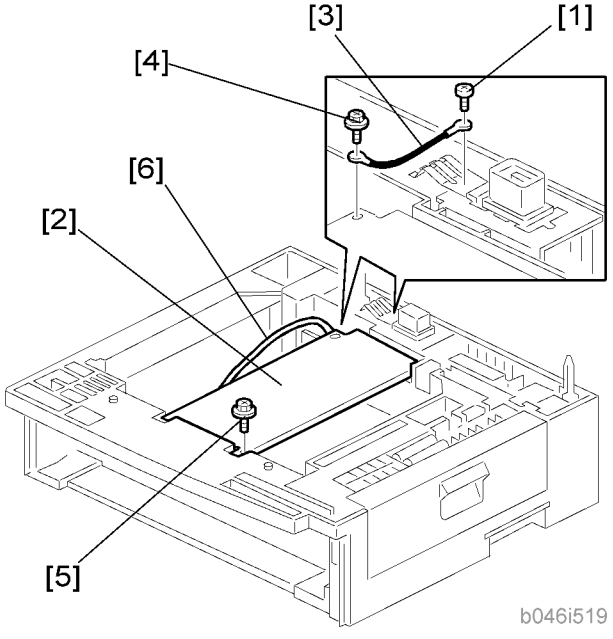

3. Remove the ground screw [1] at the rear of the paper tray unit.
4. Fasten the heater [2] and the supplied ground wire [3] to the paper tray unit (x 3). Note that [1] is the ground screw you removed in the previous step and [4] and [5] are the two supplied heater fastening screws.

Note

- Be sure to position the ground wire [3] and heater harness [6] so that they are out of the way of the copier when you set it onto the paper tray unit.

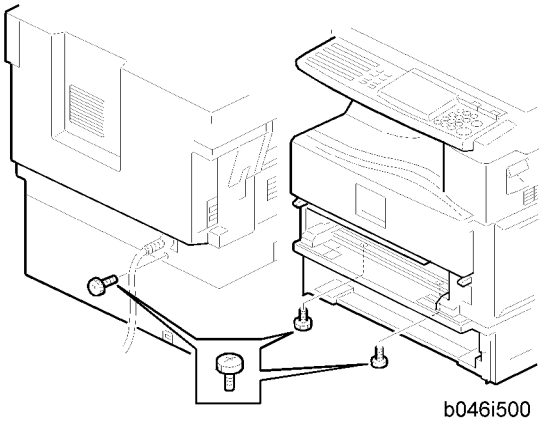

5. Set the copier onto the paper tray unit.
6. Screw the paper tray unit into place using three supplied PTU fastening screws.

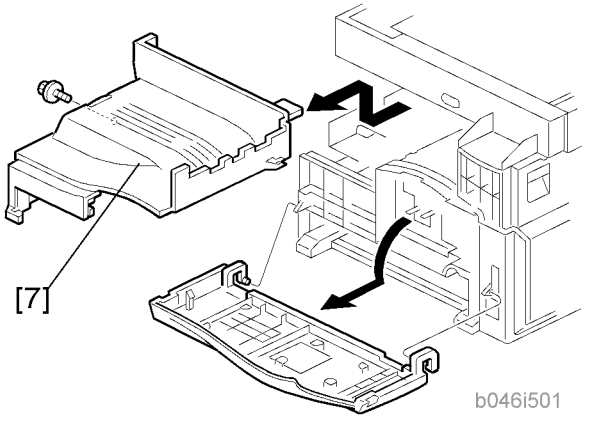

7. Open the front door and remove the copy tray [7] (×1).
8. Close the front door.

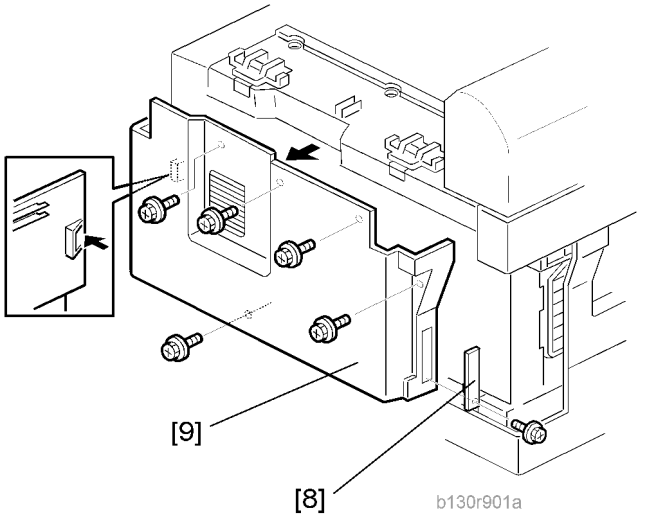

9. Remove the memory card cover [8] (x 1).
10. Remove the rear cover [9] (x 5).

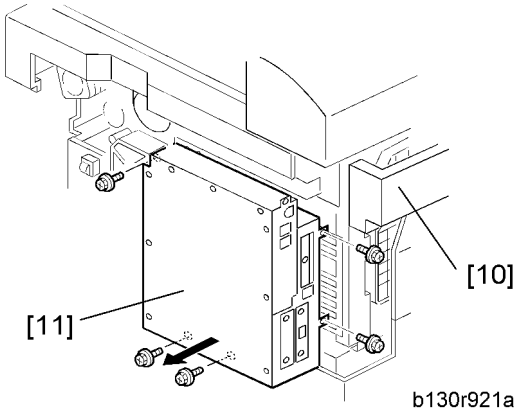

11. **For B280/B293 only:** Remove the upper left cover [10].
12. **For B280/B293 only:** Remove the controller box [11] (x 1, x 5).

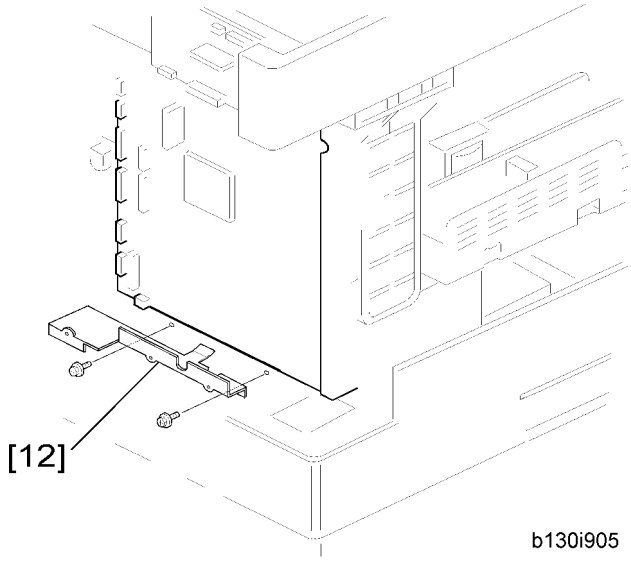

13. Remove the support bracket [12] (x 3).

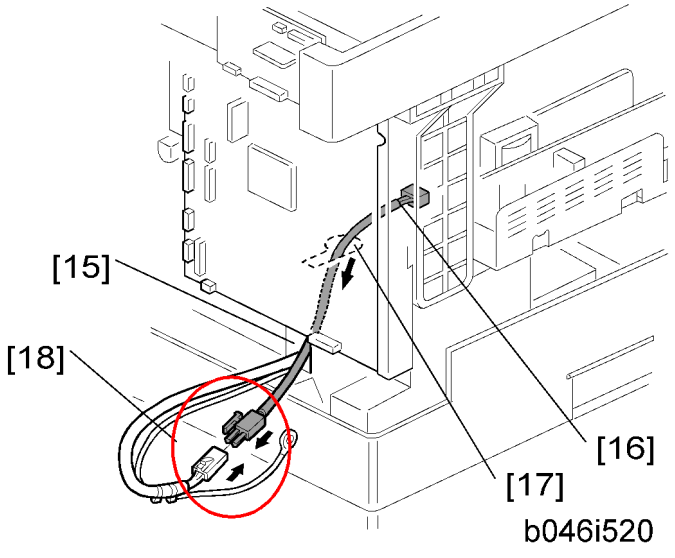

14. Pass the heater harness through the hole [15] at the rear of the copier.
15. Pass relay harness [16] through the opening [17] (at the rear of the PSU) and through the other opening [15].
16. Connect the relay harness to the heater's harness [18].

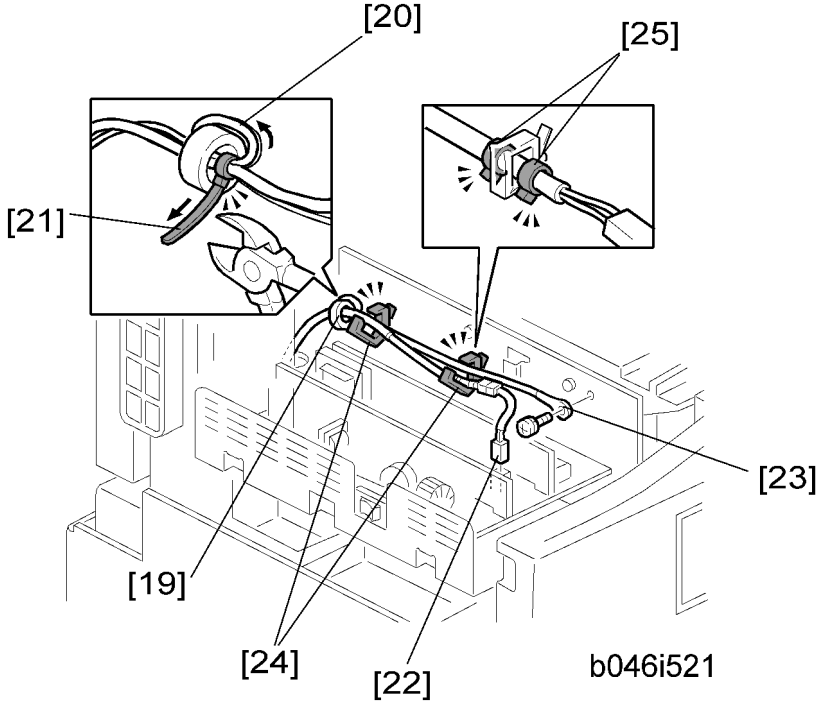

17. Pull the relay harness back into the copier.

18. Attach the ferrite core [19] over the relay harness.
19. Push the ferrite core back so that it is over the heater's harness.
20. Wrap the heater's harness once around the ferrite core [20].
21. Locate the ferrite core at the rear [24] of the copier behind the rear clamps.
22. Secure the ferrite core with the supplied tie wrap [21].
23. Clip off the excess length of the tie wrap.
24. Connect the relay harness connector [22] to the large connector at the front center of the PSU.
25. Screw the ground wire [23] to the PSU bracket with the included grounding screw.
26. Attach the clamps [24] to the PSU bracket.
27. Attach the heater harness though the clamps.
28. Position the harness so that the front clamp is between the two bindings [25] on the harness.
29. Fasten the clamps.

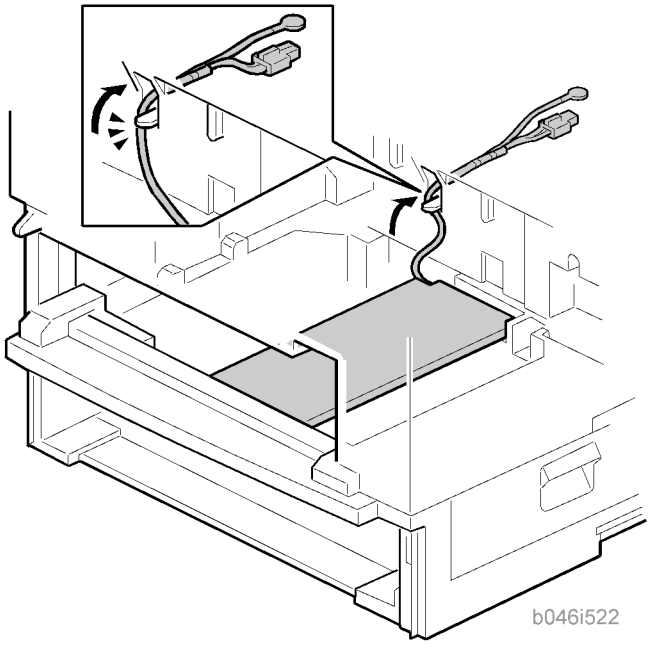

30. Pull the excess length of the heater's harness out the opening at the rear.
    Note: Be sure that the harness passes on the side of the grounding plate at the bottom of the opening. (The front of the grounding plate must remain clear.)
31. Arrange the excess harness length so that it sits beneath the FCU cover plate.
32. Attach the caution decals to the locations shown in the illustration.

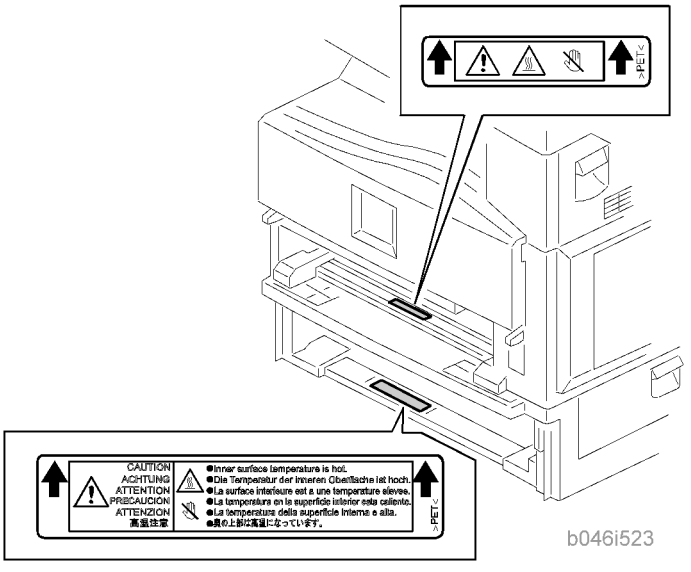

33. Reassemble the copier.
34. Plug in the power cord, and check the operation.

ARDF (B872)

Accessory Check

Description	Q'ty
1. Stud Screw	1
2. Screw	1
3. Clamp	1
4. DF Exposure Glass with Mylar	1
5. Left Scale Guide	1
Platen Sheet	1
Installation Procedure	1

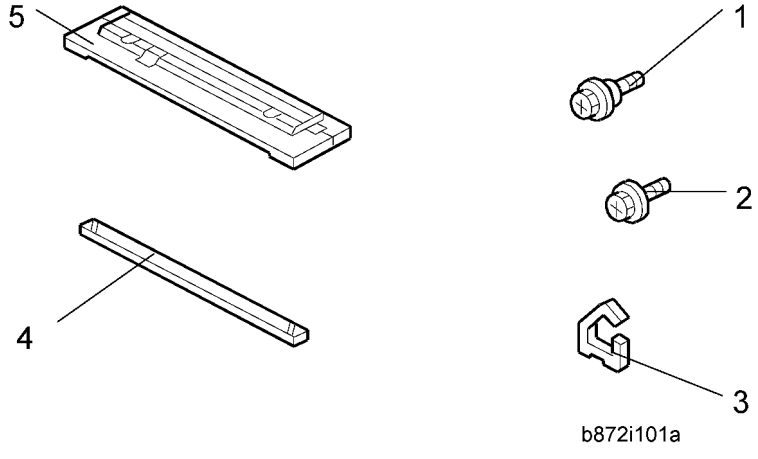

b872i101a

Installation Procedure

⚠CAUTION

- Unplug the main machine's power cord before starting the following procedure.

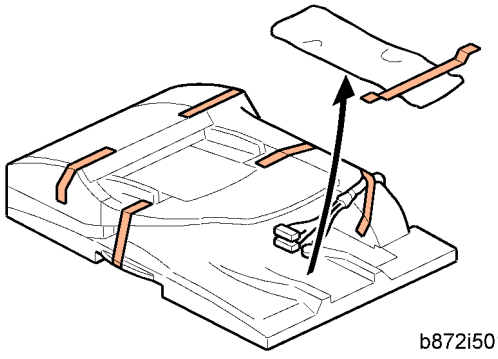

b872i501

1. Unpack the ARDF and remove the packing tape from the bottom of the ARDF body.

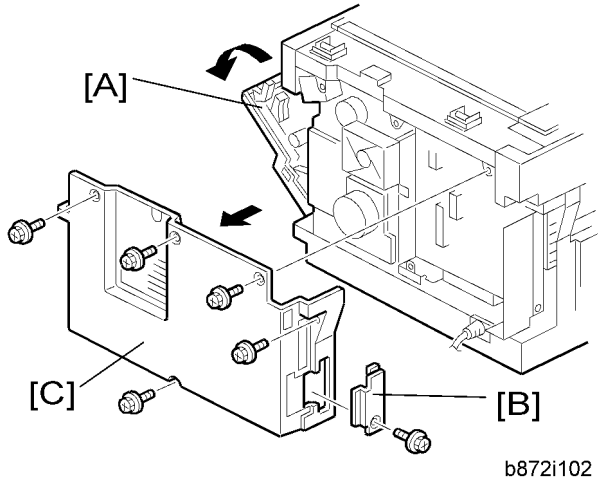

b872i102

2. Open the right door [A].
3. Remove the connector cover [B] (x 1) and rear cover [C] (x 5).

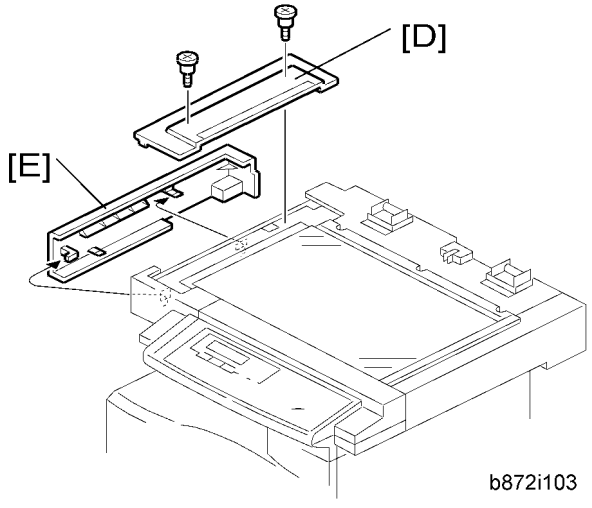

4. Remove the left guide [D] (x 2) and scanner left cover [E] (hook x 2).

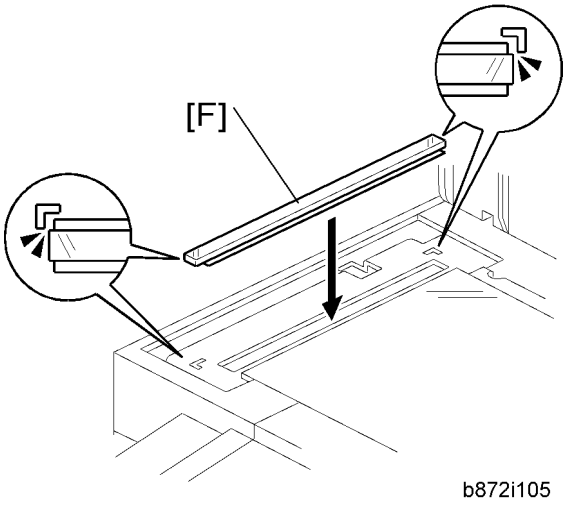

5. Place the DF exposure glass [F] on the glass holder.

Note

- When installing the DF exposure glass, make sure that the side of the DF exposure glass with two black points faces down.
- Do not hold the Mylar strip when installing the DF exposure glass.
- Make sure that there is no gap between the two Mylar strips and the scanner frame. If there is any gap between them, dust may fall into the scanner unit.

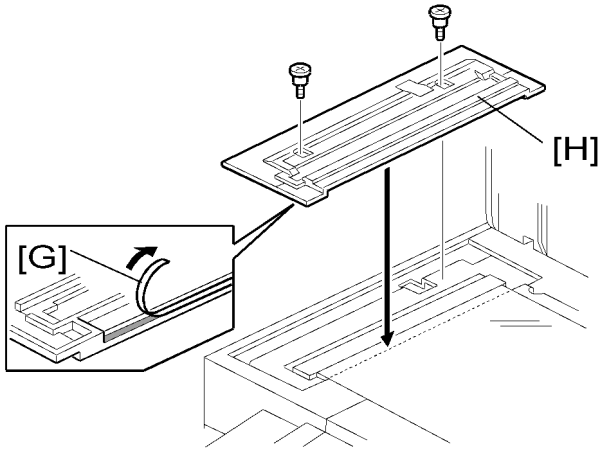

b872i106a

6. Peel off the backing [G] of the double-sided tape attached to the rear side of the left scale guide [H], then install it (x 2 removed in step 4).

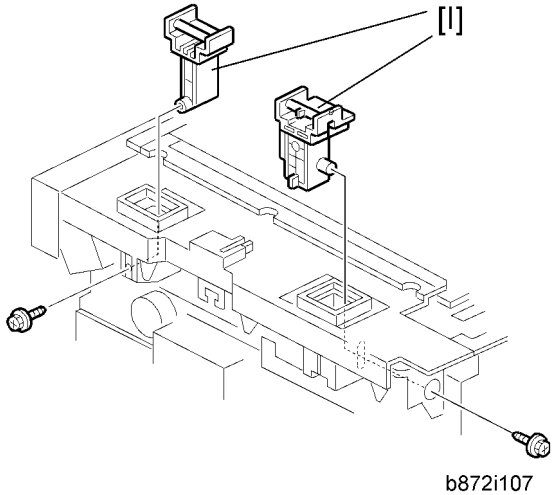

b872i107

7. Remove the two platen stays [I] and bracket (x 1 each).
8. The bracket is attached to the platen stay of the rear left side. Make sure to remove the bracket at this time.

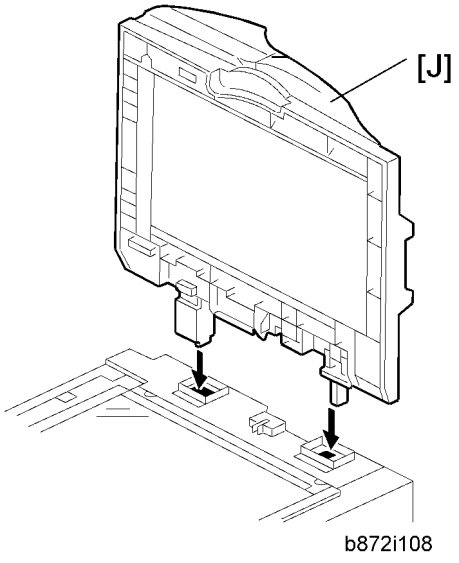

9. Mount the DF [J] on the copier as shown.

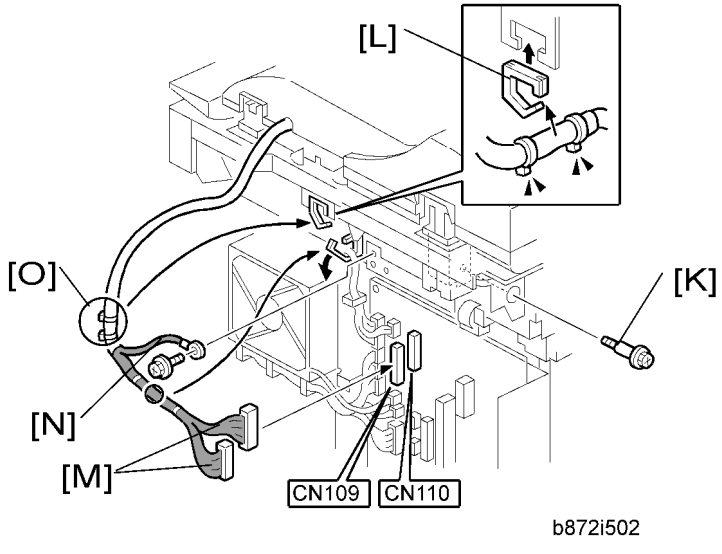

10. Secure the screw [K].
11. Attach the clamp [L].
12. Connect two I/F cables [M] to the CN109 and CN110 on the BICU, and secure the ground cable [N] (x 1, x 2).

Note

- Make sure that the I/F cable of ARDF is clamped between the two binds [O].
- Reinstall the scanner left side cover removed in step 4.

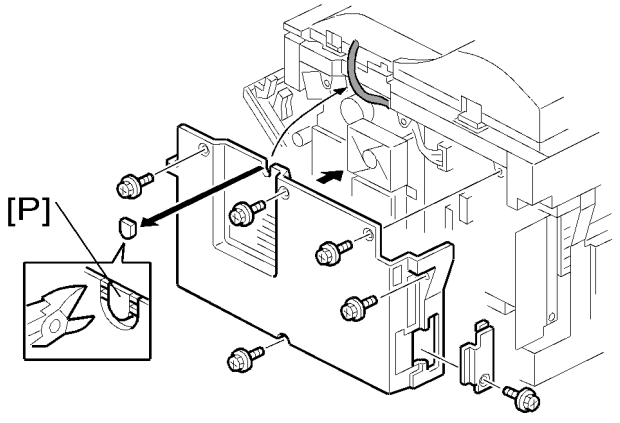

b872i110

13. Cut the cutout [P] with nippers.
14. Reinstall the rear cover and connector cover (x 6).
15. Close the right door.

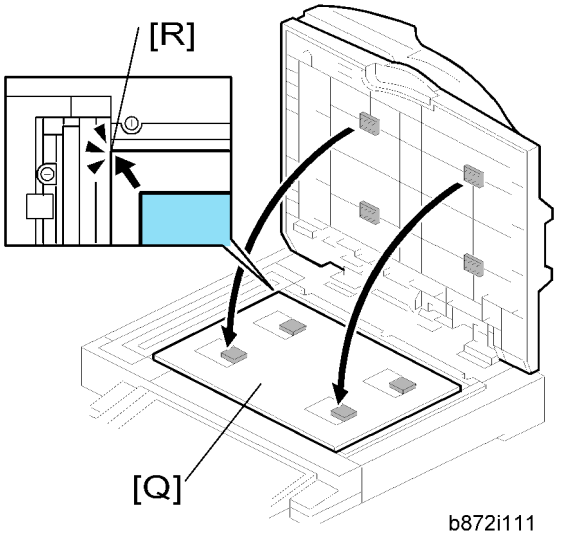

b872i111

16. Open the ARDF.
17. Place platen sheet [Q] on the exposure glass.
18. Line up the rear left corner of the platen sheet flush against corner [R] on the exposure glass.
19. Close the ARDF.

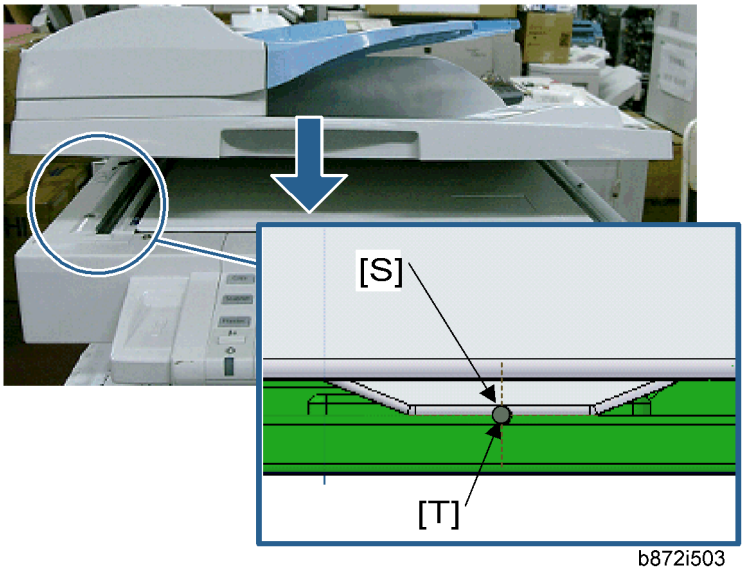

20. Check that the groove [S] of the ARDF is aligned with the groove [T] of the left scale on the scanner.

Note

- The shift value between [S] and [T] must be within ± 0.5 mm.

21. Reinstall the platen sheet if both grooves are not aligned correctly.
22. Plug in and turn on the main power switch.
23. Check the ARDF operation.
24. Make a full size copy. Then check to make sure the side-to-side and leading edge registrations are correct. If they are not, adjust the side-to-side and leading edge registration (refer to the "DF Image Adjustment" in the section "Replacement Adjustment").

DDST Unit (B880/893)

1

Accessory Check

No.	Description	Q'ty
1.	Controller Box	1
2.	Screw M3 x 6	7
3.	Printer Panel (B880: English + Symbol)	2
	Printer Panel (B893: Symbol)	1
4.	Ferrite Core (B880)	1
5.	CD-ROM (Printer and Scanner Driver) (-15, -17)	1
	CD-ROM (Printer/Scanner Reference) (-15, -17)	1
	CD-ROM (Printer/Scanner Driver and Printer/Scanner Reference) (-21)	1
6	FCC Decal (-15)	1
7	Ground Plate (B880-15, 21)	1
-	General Setting Guide (-17, -21)	1
-	Copy Reference (-17, -21)	1
-	Quick Copy Guide (-17)	1
-	Quick Printer/Scanner Guide (-17)	1
-	Sheet - EULA (Chinese) (B893)	1
-	Sheet - Caution (Chinese) (B893)	1
-	Installation Procedure	1

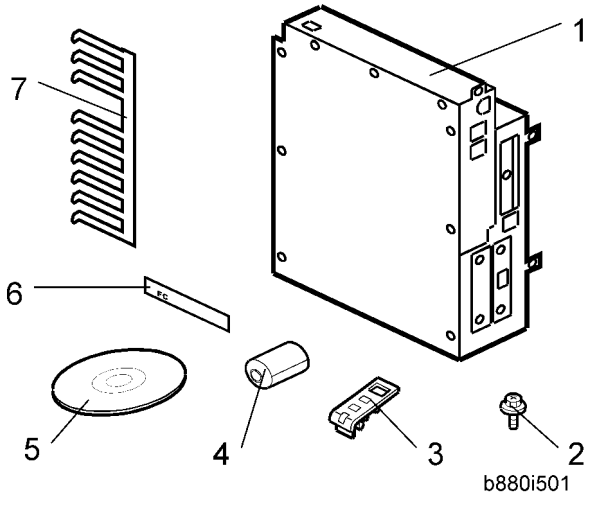

Installation Procedure

⚠CAUTION

- Unplug the main machine's power cord before starting the following procedure.

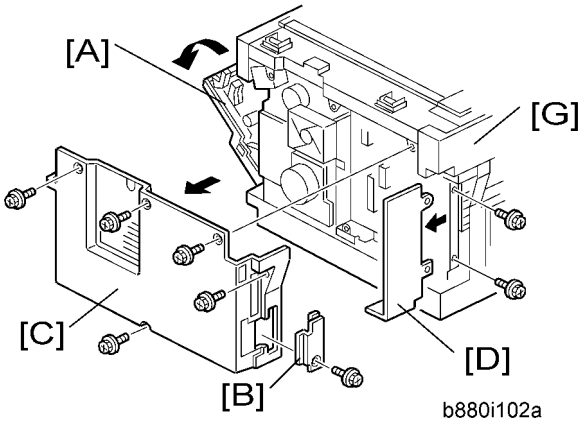

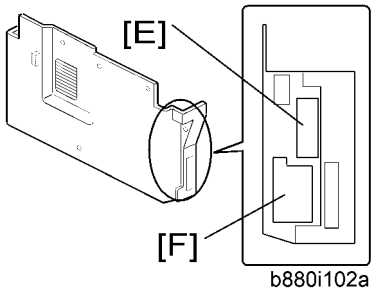

1. Open the right door [A].
2. Remove the memory card cover [B] (x 1)
3. Remove the rear cover [C] (x 5).
4. Remove the bracket [D] (x 2)
5. Cut the opening [E] and [F] on the rear cover. This opening is for the USB slot and the LAN cable.
6. Remove the upper left cover [G].

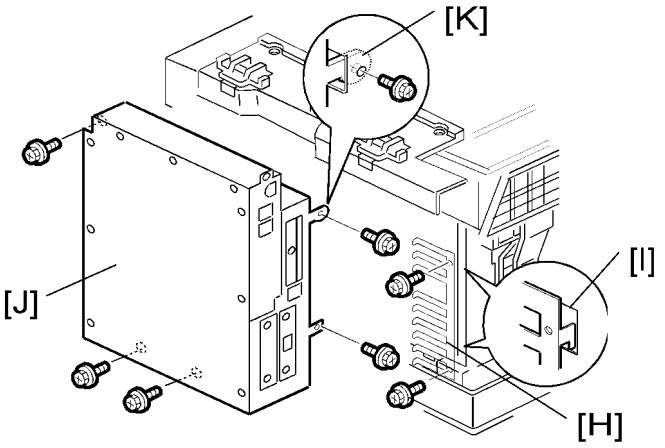

7. Install the ground plate [H] (x 2).

Note

- Insert the upper and lower hooks in the openings [I], and fasten the upper screw first.

8. Install the controller box [J] (x 5).

Note

- Insert the bracket [K] into the frame. The connector on the controller box engages with the connector on the BICU.

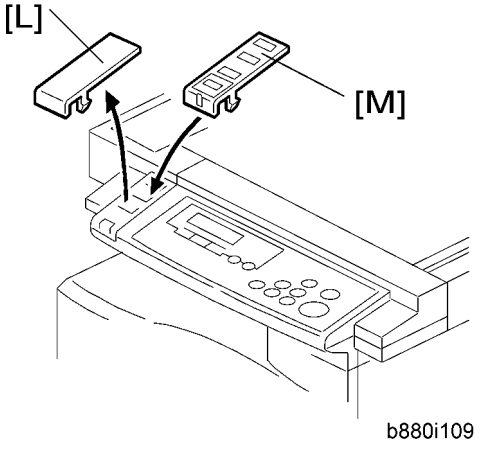

9. Remove the panel cover [L].
10. Install the printer panel [M].

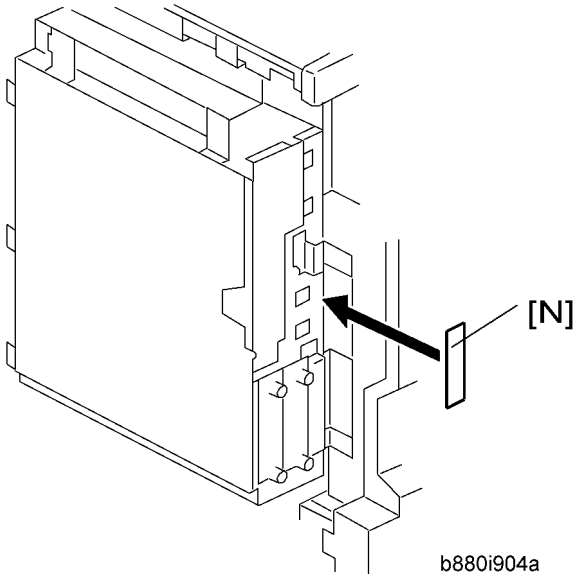

11. **For the North America model only:** Attach the FCC decal [N] close to the LAN cable slot of the controller box.
12. Reassemble the whole copier.

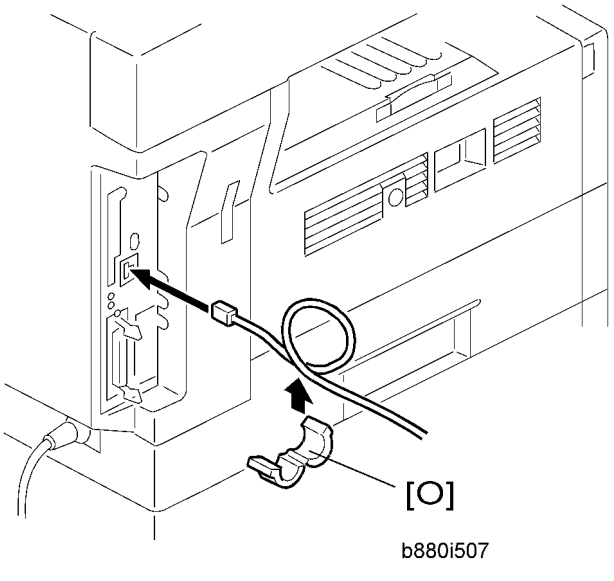

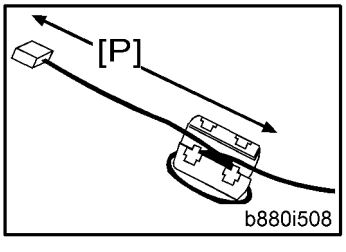

13. **For B880 only:** Attach the ferrite core [O] to the network cable and attach the cable to the copier if a network cable is used.

Note

- The end of the ferrite core must be about 10 cm (4") [P] from the end of the cable.

14. Plug in the power cord, and turn on the main switch.
15. Check the operations.

2. Preventive Maintenance

PM Tables

Reset the PM counter (SP7-804-001) after doing maintenance work.

Key: AN: As necessary, C: Clean, R: Replace, I: Inspect

	Every 45k	Every 90k	AN	NOTE
OPTICS				
Reflector	C		C	Optics cloth
1st mirror	C		C	Optics cloth
2nd mirror	C		C	Optics cloth
3rd mirror	C		C	Optics cloth
Platen cover	C		C	Dry cloth
Exposure glass	C		C	Dry cloth
Toner shield glass	C		C	Dry cloth
DRUM AREA				
PCU	R			Clean toner-bottle holder.
Transfer roller		R		
Discharge plate		R		
PAPER FEED				
Paper feed roller		R	C	Water or alcohol.
Friction pad		R	C	Dry cloth
Bottom-plate pad	C		C	Water or alcohol.
Registration roller	C		C	Water or alcohol.
FUSING UNIT				
Hot roller		R		
Pressure roller		R		

	Every 45k	Every 90k	AN	NOTE
Hot roller bearings		R		
Pressure-roller bushings		I		
Inlet guide		C		
Outlet guide		C		
Hot roller stripper pawls		R		
Thermistor		C		

	Every 90k	AN	NOTE
ARDF			
Separation roller	R	C	Water or alcohol
Pick-up roller	R	C	Water or alcohol
Feed roller	R	C	Water or alcohol
White plate		C	Water or alcohol
DF exposure glass		C	Water
Rollers R0, R1, R2		C	Water or alcohol
Registration sensor reflector		C	Water or alcohol

	Every 120k	AN	NOTE
PAPER TRAY UNIT			
Paper feed roller	R		
Bottom-plate pad		C	Dry cloth
Friction pad	R		

How to Clear the PM Counter

Reset the PM counter after your maintenance work.

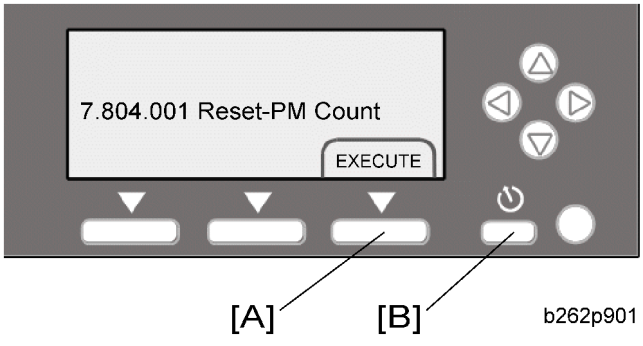

1. Activate the SP mode.
2. Select SP7-804-001.
3. Press the EXECUTE key [A]. The message "Completed" is displayed when the program ends normally. An error message is displayed if the program ends abnormally.
4. Press the ⏻ (Escape) key [B] to end the program.

3. Replacement and Adjustment

Precautions

General

⚠CAUTION

- Turn off the main power switch and unplug the machine before starting replacement.

Before turning off the main power switch, check that no mechanical component is operating. Mechanical components may stop out of their home positions if you turn off the main power switch while they are operating. The component may be damaged if you try to remove it when it is not in the home position.

Halogen-free Cable

⚠CAUTION

- Use extreme caution while handling cables.

To comply with local regulations, halogen-free cables are used in this machine. Halogen-free cables are environment-friendly, but no stronger than conventional cables. These cables may be damaged in any of the following cases:

- The cable is caught between hard objects such as brackets, screws, PCBs, and exterior covers.
- The cable is rubbed on a hard object such as brackets, screws, PCBs, and exterior covers.
- The cable is scratched with a hard object such as brackets, screws, PCBs, exterior covers, screwdrivers, and fingernails.

Special Tools and Lubricants

Part Number	Description	Q'ty
A1849501	Optics Adjustment Tools (2 pcs/set)	1 set
A2929500	Test Chart – S5S (10 pcs/set)	1 set
VSSM9000	Digital Multimeter – Fluke 87	1
N8036701	Flash Memory Card (4MB)	1
N8031000	Case for Flash Memory Card	1
A2579300	Grease Barrierta – S552R	1
52039502	Silicon Grease 501	1

Exterior Covers and Operation Panel

Rear Cover

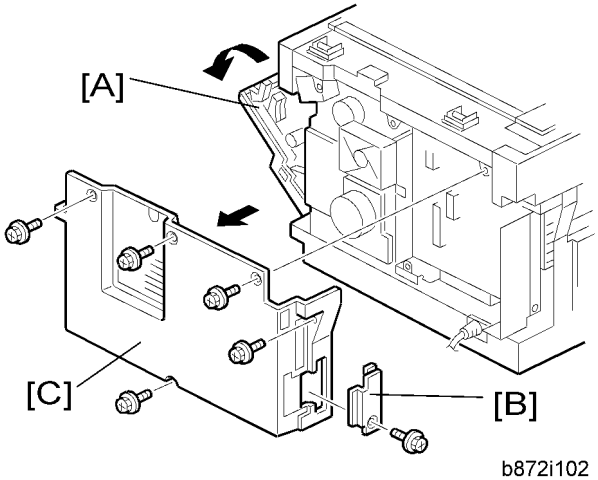

1. Open the left door [A].
2. Memory card cover [B] (x 1)
3. Rear cover [C] (x 5)

Copy Tray

⚠CAUTION

- Make sure that the cables under the copy tray are in place before reassembling the copier. If these cables are caught between the copy tray and the inner cover, they may be severely damaged.

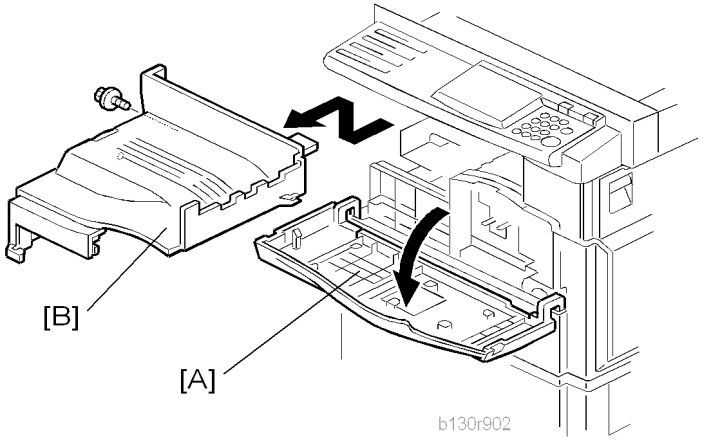

1. Open the front door [A].
2. Copy tray [B] (x 1)

Reassembling

There are several cables under the front end of the copy tray. To set these cables in place, gently pull these cables to the left-hand side (toward the PSU) and hold them there as you attach the copy tray.

Scale Plate

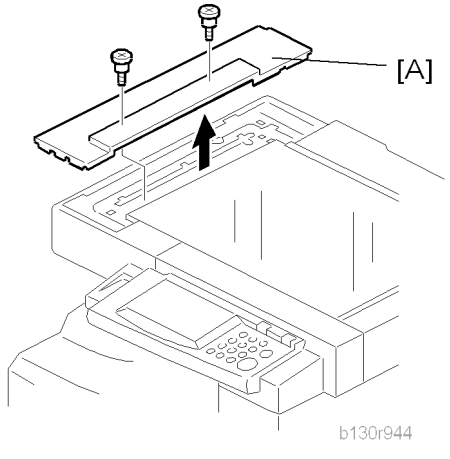

The scale plate is for the following models only:

- The copier/printer/scanner model (B280/B293)
- The basic model (B262)

1. Scale plate [A] (× 2)

Operation Panel and Upper Covers

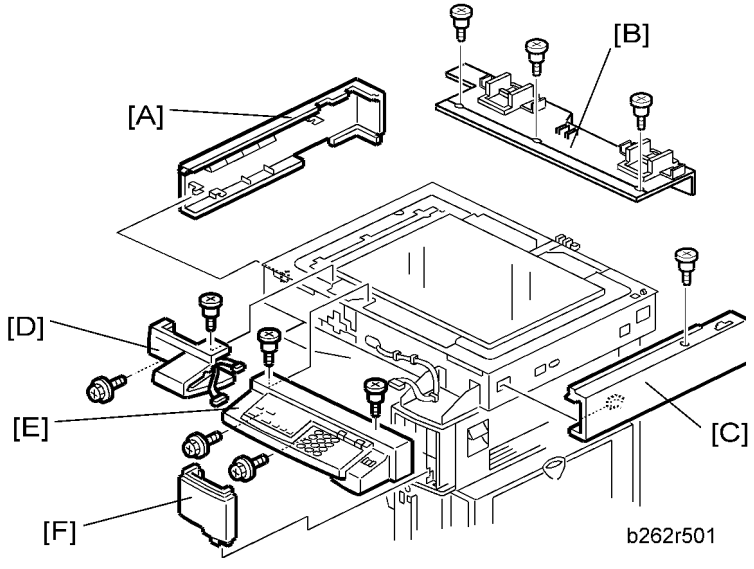

1. Remove the ARDF (if it has been installed).
2. Rear cover (☛ "Rear Cover")
3. Slide the upper left cover [A] to the rear.
4. Rear scale [B] (x 3)
5. Slide the upper right cover [C] to the rear.
6. Front left cover [D] (x 2)
7. Operation panel [E] (x 4, x 1)
8. Front right cover [F]

Right Door

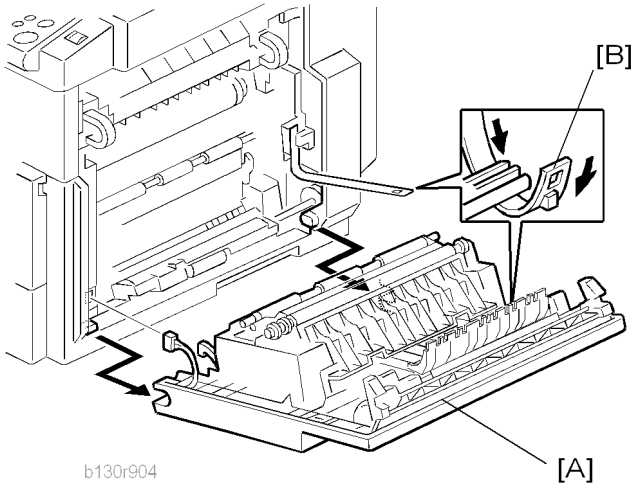

1. Open the right door [A].
2. Release the strap [B].
3. Right door (✋ × 1)

Bypass Tray

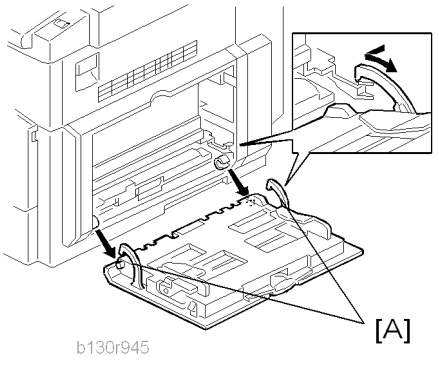

1. Press the stopper rails [A] inward.

Platen Cover Sensor

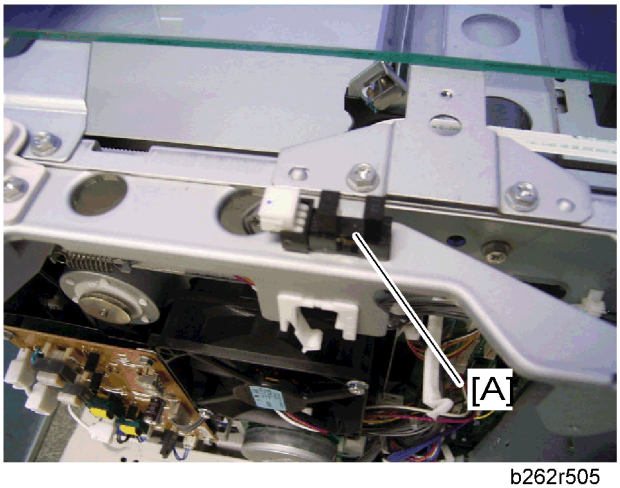

b262r505

1. Rear cover (☛ "Rear Cover")
2. Rear scale (☛ "Operation Panel and Upper Covers")
3. Platen cover sensor [A] (× 1, hook)

Scanner Unit

To clean the mirrors and lenses, use a blower brush or wet cotton.

Exposure Glass

To clean the exposure glass, use alcohol or glass cleaner.

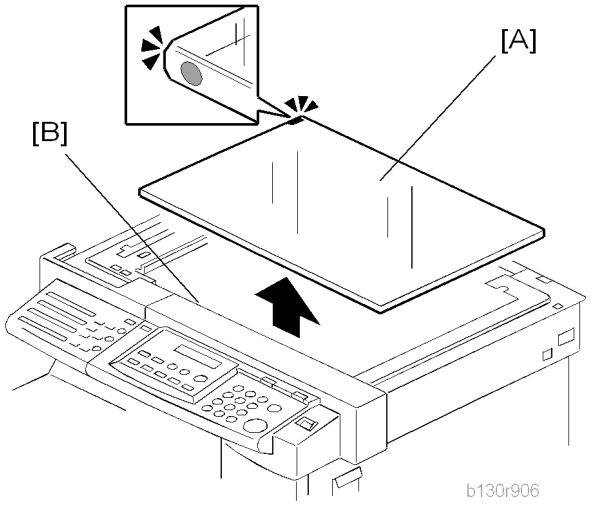

Non-ARDF machines

1. Rear cover (☛ "Rear Cover")
2. Scale plate (☛ "Operation Panel and Upper Covers")
3. Exposure glass [A]

ARDF-equipped machines

1. Rear cover (☛ "Rear Cover")
2. Rear scale, upper right cover (☛ "Operation Panel and Upper Covers")
3. Exposure glass [A]

Reassembling

Make sure that the marking on the glass is at the rear left corner, and that the left edge of the glass is aligned flush against the support ridge [B] on the frame.

Adjustment

When replacing the white plate, conduct the Scan Auto Adjustment (☛SP4-428-001).

Lens Block

⚠CAUTION

- Do not disassemble the lens block. The lens block is precision adjusted before shipment.
- Do not touch the screws on the CCD. The CCD is precision adjusted before shipment.

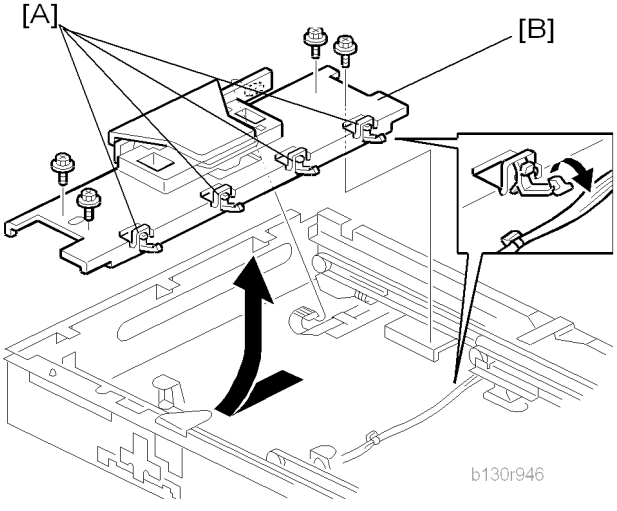

1. Exposure glass (☛ "Exposure Glass")
2. Front left cover, operation panel (☛ "Operation Panel and Upper Covers")
3. Release the cable from the four clamps [A].
4. Lens block [B] (☞ × 4, 1 flat cable)

Note

- Do not loosen the paint-locked screws holding the lens unit in place.
- After installing a new lens block, carry out copy adjustments (☛ "Adjusting Copy Image Area").

Exposure Lamp, Lamp Stabilizer Board

Do not fold the exposure cable on the exposure lamp.

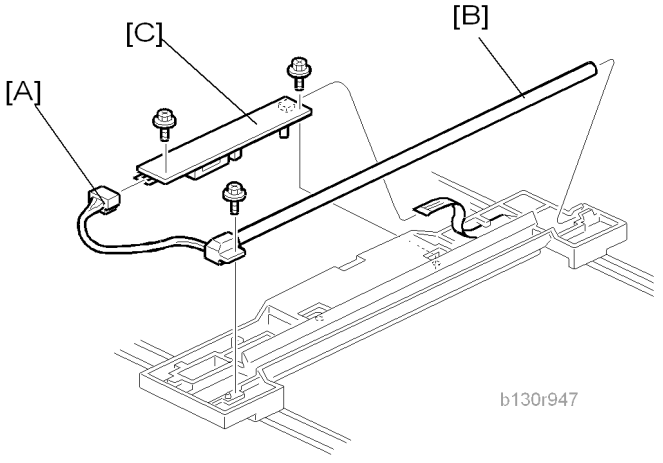

1. Exposure glass (☛ "Exposure Glass")
2. Front left cover, operation panel (☛ "Operation Panel and Upper Covers")
3. Slide the first scanner to a position where the lamp and scanner are clear of the metal lids.
4. Disconnect the lamp connector [A].
5. Remove either or both of the following:
    - Exposure lamp [B] (x 1)
    - Lamp stabilizer board [C] (x 2, 1 flat cable)

Scanner Motor

1. Rear cover (☛ "Rear Cover")
2. Rear scale, upper right cover (☛ "Operation Panel and Upper Covers")

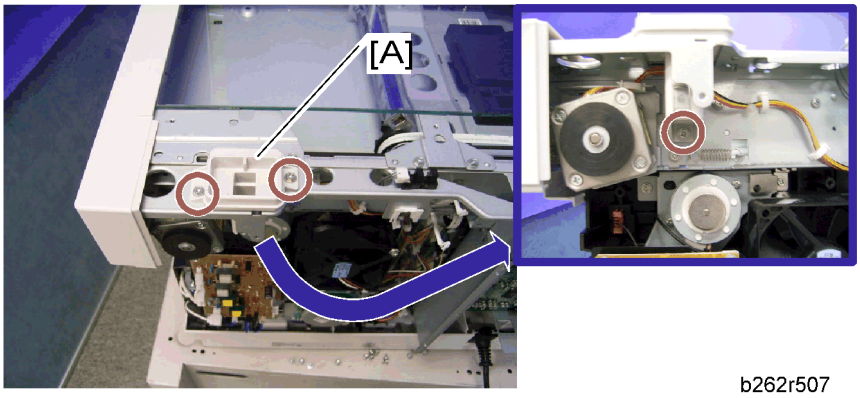

b262r507

3. Remove the right platen stay holder [A] (x 3).

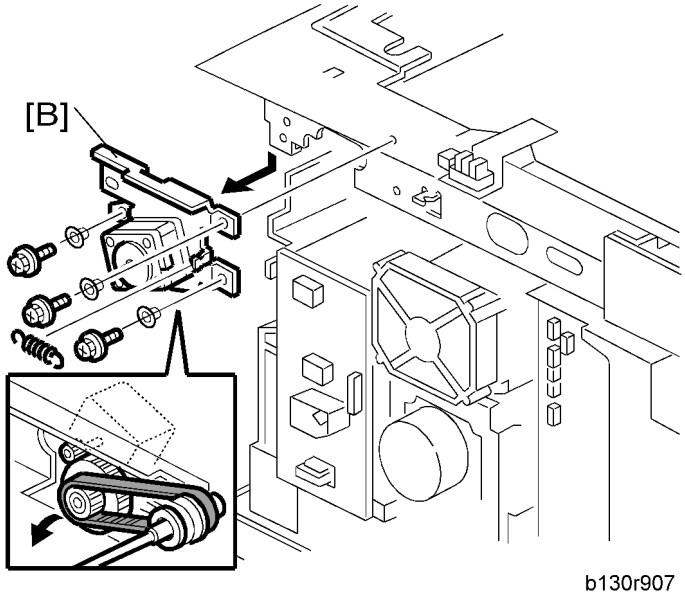

b130r907

4. Scanner motor [B] (× 3, 1 spring, 3 screw holders, × 1)

Reinstalling

When reinstalling, fasten the screws loosely, set the spring in place, and tighten up the screws.

Scanner HP Sensor

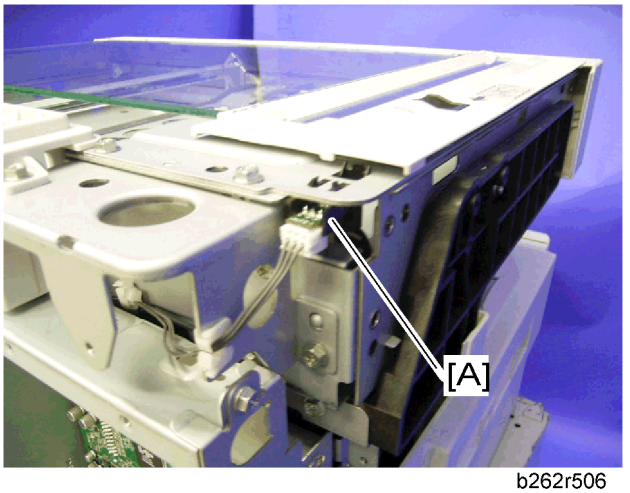

b262r506

1. Rear cover (☛ "Rear Cover")
2. Front left cover (☛ "Operation Panel and Upper Covers")
3. Scale plate (☛ "Scale Plate")
4. Scanner HP sensor [A] (✋ × 1, hook)

Note

- Move the first scanner from the home position if you have difficulty removing the sensor.

Scanner alignment adjustment

1. Rear cover (☛ "Rear Cover")
2. Rear scale, upper right cover, front left cover, operation panel (☛ "Operation Panel and Upper Covers")
3. Exposure glass (☛ "Exposure Glass").
4. Loosen the 2 screws holding the 1st and 2nd scanner belts in place.

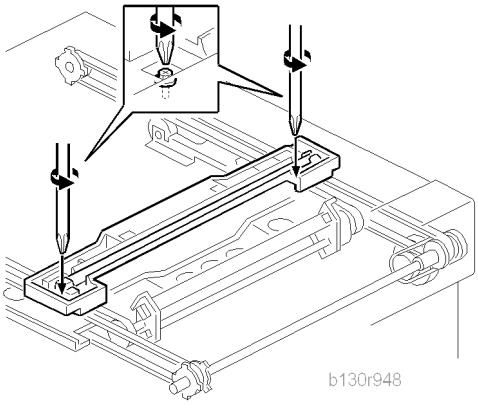

5. Slide the 1st and 2nd scanners so that all four of the following are roughly aligned on both the front and back sides:
    - The hole on the copier's lid
    - The hole on the 1st scanner
    - The corner right hole on the 2nd scanner
    - The hole at the base of the scanner

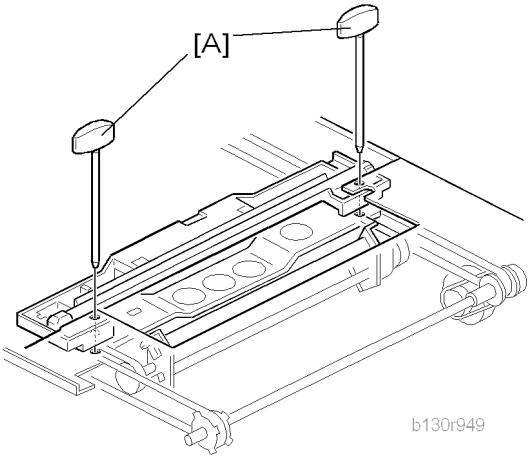

6. Insert the two optics adjustment tools [A], and adjust the scanners as necessary so that the tools go through all four holes.
7. Tighten the two screws that you loosened at step 2 above, so that the belts are firmly clamped into place.
8. Remove the adjustment tools.

Fusing

Fusing Unit

⚠CAUTION

- Before handling the fusing unit, make sure that the unit is cool enough. The fusing unit can be very hot.

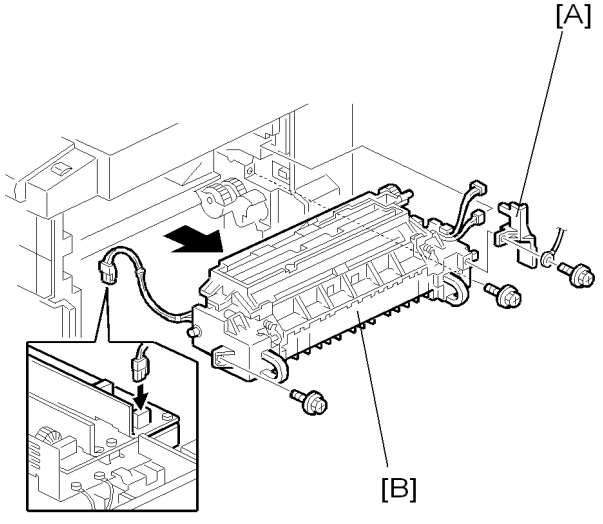

b130r950

1. Copy tray (☛ "Copy Tray")
2. Open the right door.
3. Connector cover [A] (x 1)

   Note

   - When reinstalling, attach the ground wire.
4. Fusing unit [B] (x 2, x 4)

Exit Sensor

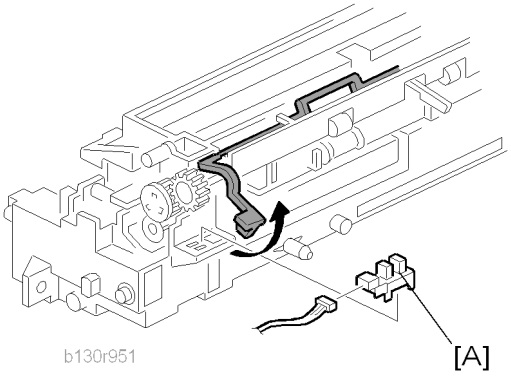

1. Fusing unit (☛ "Fusing Unit")
2. Exit sensor [A] (✋ × 1)

Hot Roller Stripper Pawls

Important

- **Take care not to damage the hot roller stripper pawls and the tension springs.**

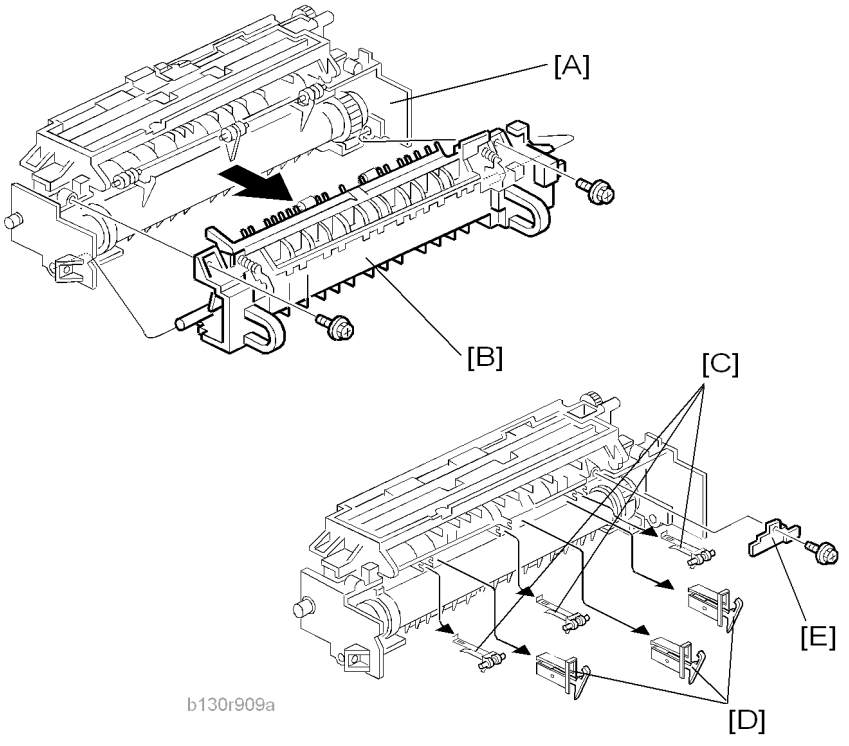

1. Fusing unit (☛ "Fusing Unit")
2. Separate the fusing unit into two sections: the hot roller section [A] and the pressure roller section [B] (☞ x 2).
   After removing the screws, lower the pressure roller section about halfway and then slide it toward the front side to detach it.
3. Support rollers [C]
4. Hot roller stripper pawls [D]

Note

- Remove the spacer [E] if you are removing the hot roller assembly (☛ "Hot Roller & Fusing Lamp").

Hot Roller & Fusing Lamp

⚠CAUTION

- Do not touch the fusing lamp and rollers with your bare hands.

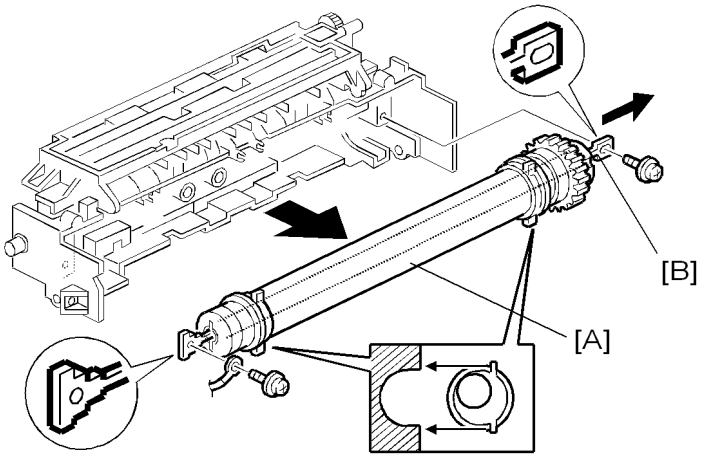

1. Hot roller stripper pawls and spacers (☛ " Hot Roller Stripper Pawls")
2. Hot roller assembly [A] (🔩 x 2)
3. Fusing lamp [B]

Note

- When reassembling, check that the direction of the fusing lamp is correct.

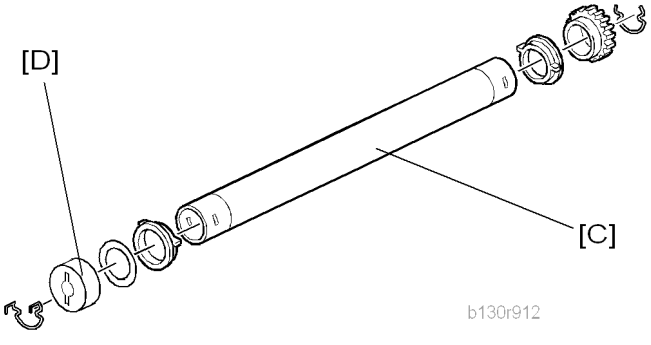

4. Hot roller [C] (2 C-rings, 1 spacer, 1 gear, 2 bushings, 1 cover [D])

Reassembling

Be sure that:

- The fusing lamp is positioned correctly.
- The fusing lamp does not touch the internal part of the hot roller.

Thermoswitches and Thermistor

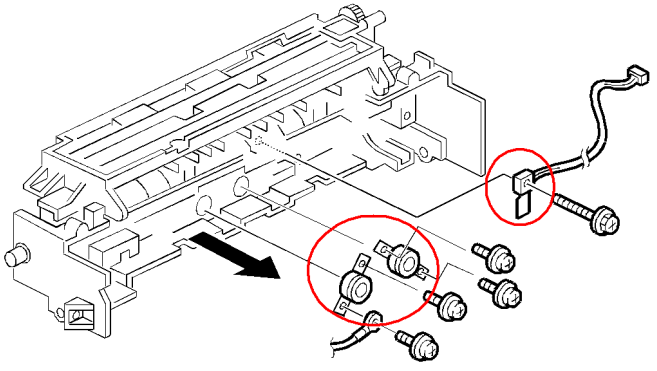

b130r913

1. Hot roller assembly (☛ "Hot Roller & Fusing Lamp")
2. Thermoswitches (🔩 x 2 for each)
3. Thermistor (🔩 x 1)

Reassembling

Make sure of the following:

- That the thermistor is in contact with the hot roller.
- That the hot roller turns smoothly.

Note

- Do not recycle a thermoswitch that is already opened. Safety is not guaranteed if you do this.

Pressure Roller

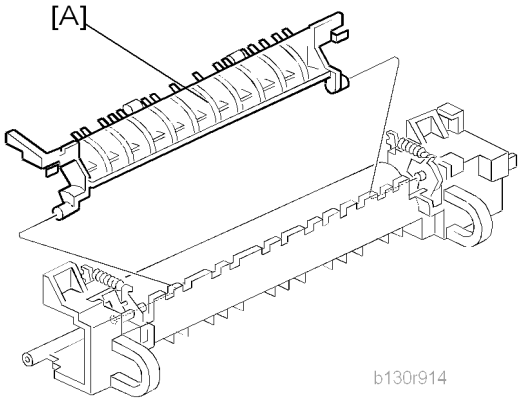

1. Separate the fusing unit into two sections (☛ "Hot Roller Stripper Pawls").
2. Fusing entrance guide [A]

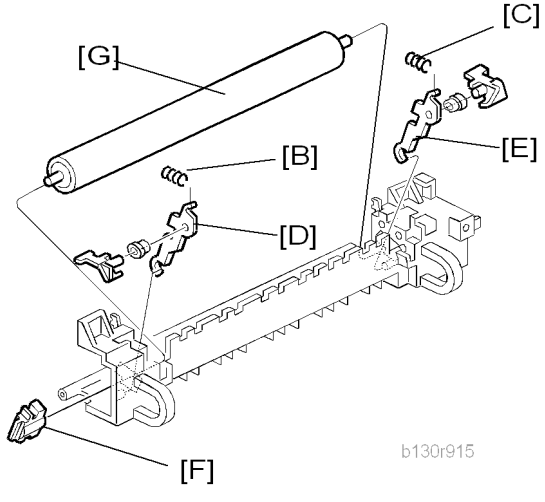

3. Two springs [B][C]
4. Two pressure arms [D][E]
5. Bushing [F]
6. Pressure roller [G]

Checking the NIP band

You can check the nip band to see if the fusing unit is in a good condition–especially, if the hot roller and pressure roller are correctly installed.

1. Activate the SP mode.
2. Select SP1-109-001.
3. Specify "1."
4. Press the OK key.
5. Press the ⓚ key. The copy mode is activated.
6. Place an OHP sheet on the by-pass tray.
7. Press the ⓚ key. The copier feeds the OHP sheet, and stops it between the hot roller and the pressure roller for about 20 seconds.
8. Wait until the OHP sheet is output.
9. Press the ▭ key.
10. Make sure SP1-109-001 is selected.
11. Specify "0".
12. Press the OK key.
13. Quit the SP mode.

You see an opaque stripe on the OHP sheet. This is the trace of the nip band. The normal nip band is symmetrical on the OHP sheet. Both ends are slightly thicker than the center.

Note

- There are no specifications or standards for the nip band of this copier.

PCU and Quenching Lamp

When handling the photo conductor unit (PCU), use caution:

- Do not touch the OPC drum with your bare hands. When the OPC drum is unclean, clean it with dry cloth, or clean it with wet cotton and wipe it with dry cloth.
- Do not use alcohol any other chemicals to clean the OPC drum. These substances damage the OPC-drum surface.
- Keep PCUs in a cool, dry place.
- Do not expose the OPC to any corrosive gas such as ammonia.
- Do not shake a used PCU. Remaining toner and developer may spill out.
- Dispose of used PCUs in accordance with local regulations.

PCU

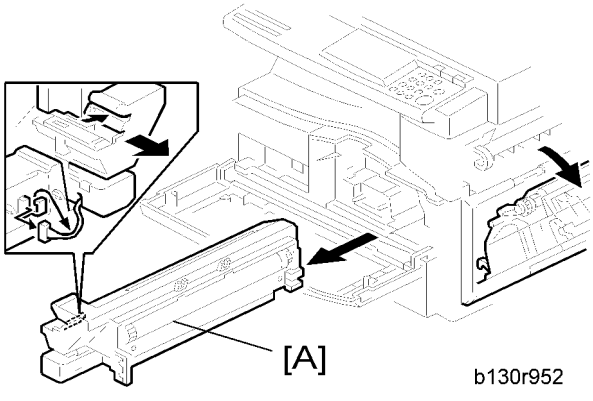

1. Open the right door.

   Note

   - The PCU may become stuck if you try to remove it while the front door is closed.
2. Open the front door.
3. Remove the toner bottle holder.

   Note

   - Clean all spilled toner off the toner bottle area and the inside of the front door.
4. Pull out the PCU [A] (x 1).
5. When having installed a new PCU, remove the Styrofoam and tags (☛ "Installation Procedure" in the section "Installation").

Initialization

After you turn on the main power switch, the copier automatically initializes the new PCU. When the copier is executing initialization, it is important that you:

- Do not turn off the main power switch.
- Do not open or remove exterior covers.

Quenching Lamp

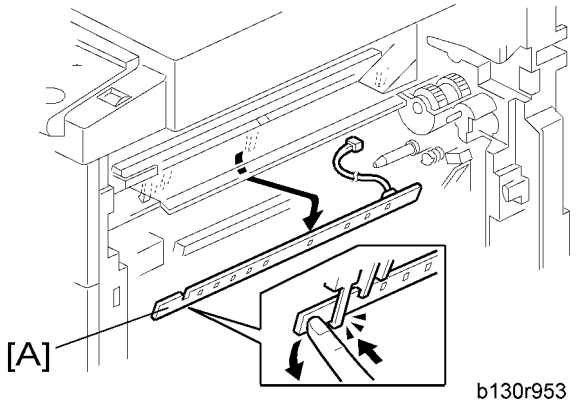

1. PCU (☛ "PCU")
2. Quenching lamp [A] (✋ x 1)

Exhaust Fan and Main Motor

Exhaust Fan

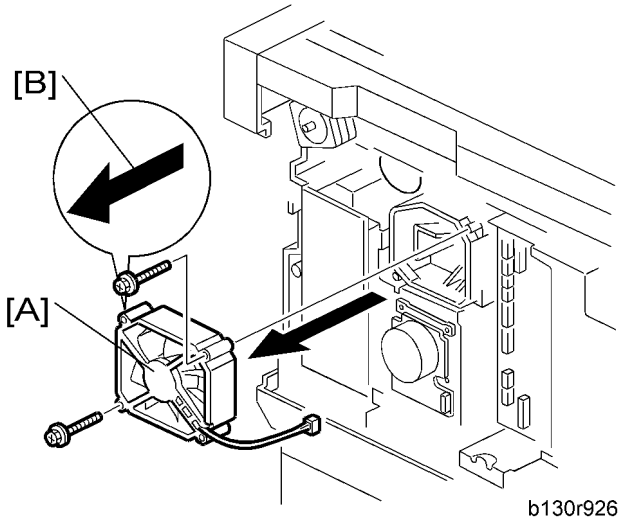

1. Rear cover (☛ "Rear Cover")
2. Exhaust fan [A] (x 2, x 1)

Reassembling

Make sure that the arrow [B] on the frame points to the rear side. The arrow indicates the direction of airflow.

Main Motor

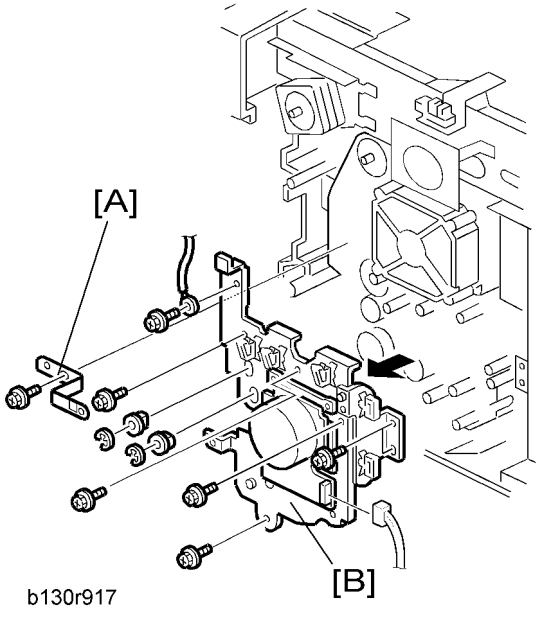

1. Rear cover (☛ "Rear Cover")
2. High-voltage power supply board (☛ "High-Voltage Power Supply Board")
3. Ground plate [A] (x 1)
4. Main motor with the gear cover [B] (x 1, x 7, x 2, 2 bushings)

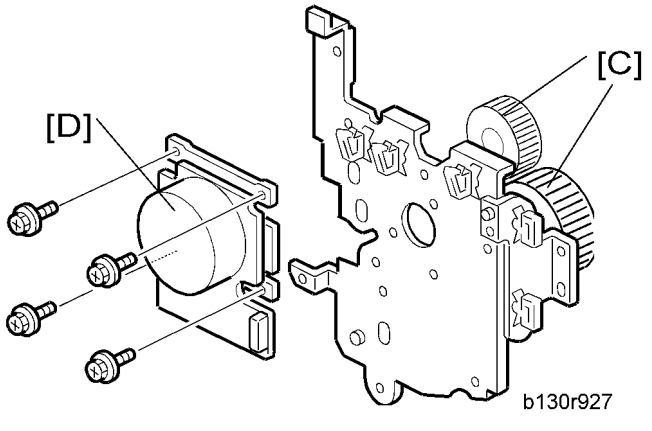

5. All gears [C]
6. Main motor [D] (x 4)

Reassembling

Attach the main motor before attaching the gears.

Paper Feed

Paper Feed Roller and Friction Pad

When handling the paper tray or the paper feed roller, use caution:

- Do not touch the surface of paper feed rollers.
- To avoid paper jams, correctly set the side and end fences in the paper tray.

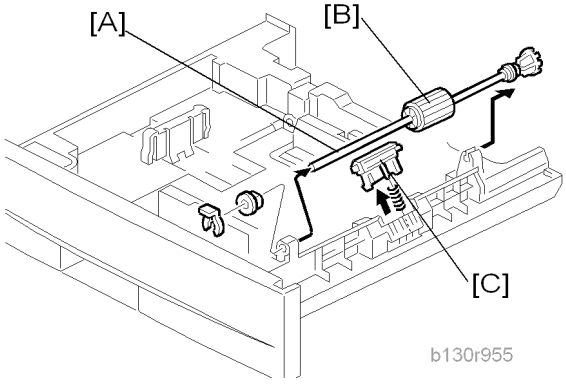

1. Paper tray
2. Shaft [A] (⟲ x 1)
3. Remove either or both of the following:
    - Paper feed roller [B]
    - Friction pad [C]

Paper End Sensor

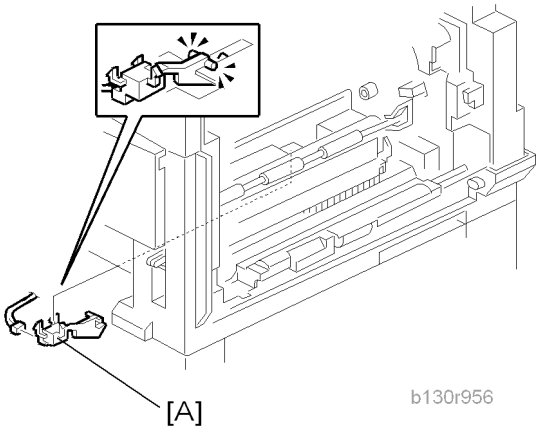

1. Paper tray
2. Open the right door.
3. PCU (☛ "PCU")
4. Paper end sensor [A] (✋ x 1)

Registration Sensor

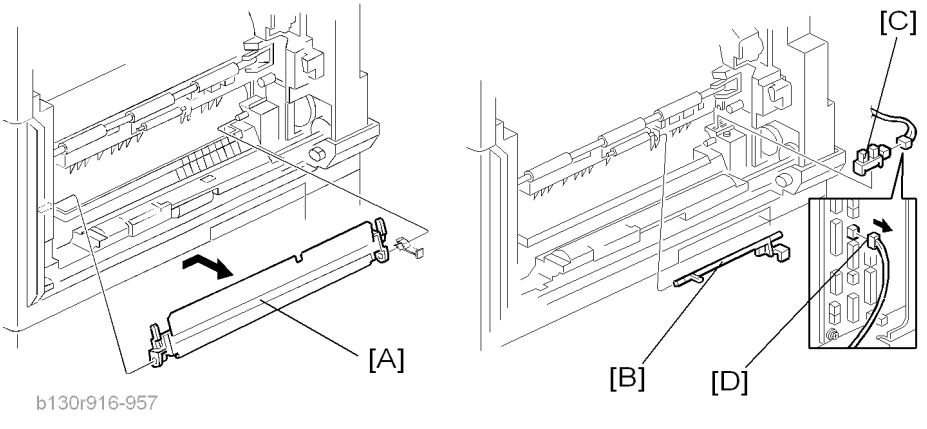

1. Paper tray
2. Open the right door.
3. Open the paper guide [A].

Note

- Remove the paper guide (Clip x 1) if you have difficulty removing the registration sensor.

4. Registration sensor feeler [B]
5. Registration sensor [C] (x 1)

Note

- Disconnect the connector (CN127 [D]) if you have difficulty removing the registration sensor.

Bypass Paper End Sensor

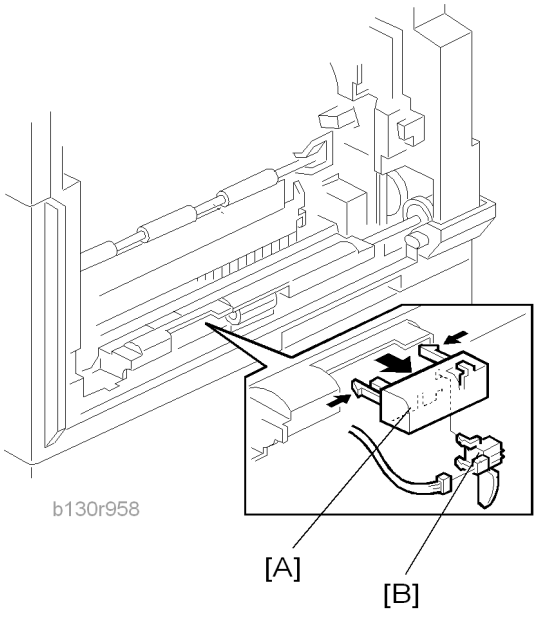

1. Right door (☛ "Right Door")
2. Sensor compartment [A]
3. Bypass paper end sensor [B] (x 1)

Bypass Feed Roller

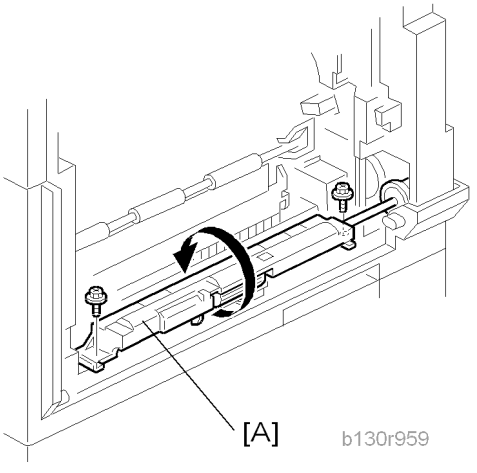

1. Right door (☛ "Right Door")
2. Turn the feed roller housing upside down [A] (🔩 x 2).

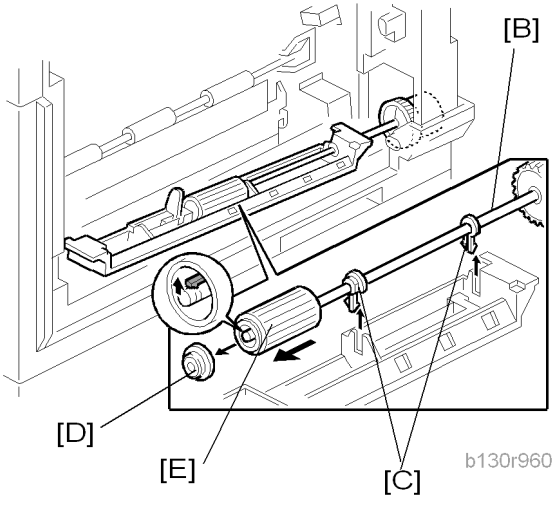

3. Feed roller shaft [B] (2 snap pawls [C], 1 spacer [D])
4. Bypass feed roller [E]

Bypass Feed Clutch and Friction Pad

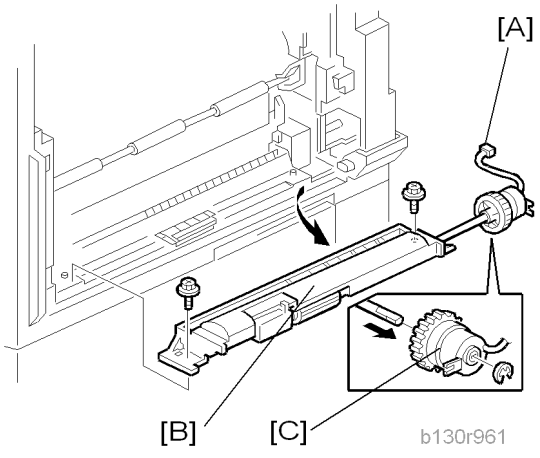

1. Rear cover (☛ "Rear Cover")
2. Right door (☛ "Right Door")
3. Disconnect the bypass feed clutch connector [A] (CN93).
4. Bypass feed roller housing [B] (x 2)
5. Bypass feed clutch [C] (x 1)

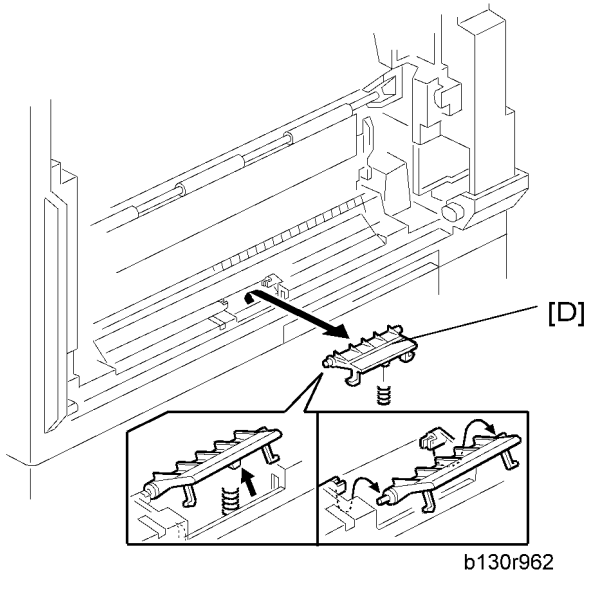

6. Bypass friction pad [D]

Paper Feed and Registration Clutches

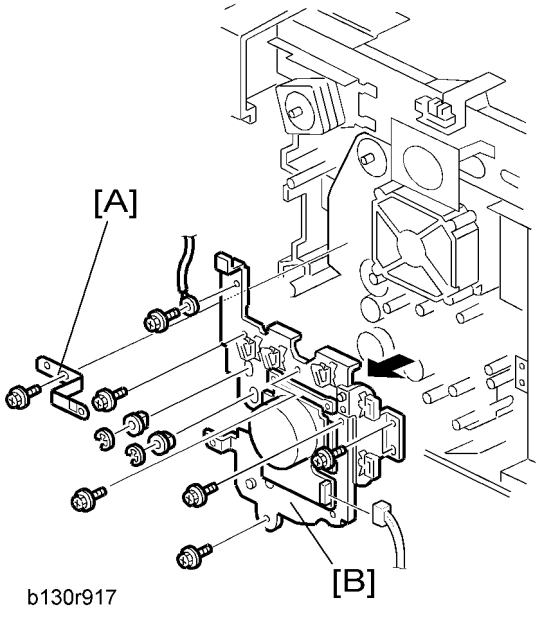

1. Paper tray
2. High-voltage power supply board (☛ "High-Voltage Power Supply Board")
3. Ground plate [A] (x 1)
4. Gear cover [B] (x 1, x 7, x 2, 2 bushings)

Note

- Do not remove the main motor from the gear cover.

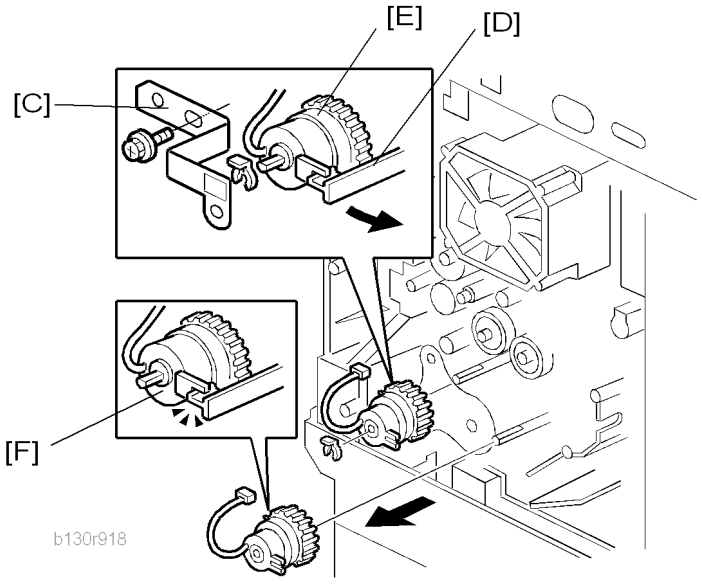

5. Ground plate [C] (x 1)
6. Slowly push the clutch holder [D] and remove the registration clutch [E] (x 1, x 1).
7. Paper feed clutch [F]

Image Transfer

Transfer Roller

⚠CAUTION

- Do not touch the transfer roller with your bare hands.
- Do not scratch the transfer roller. The transfer roller is easily damaged.

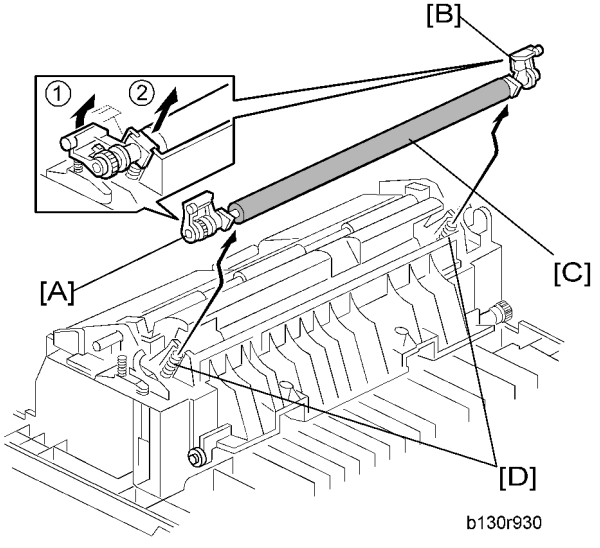

1. Right door (☛ "Right Door")
2. Raise the levers [A][B] at the ends of the image transfer roller.
3. Release the image transfer roller [C].

Reassembling

Make sure that the springs [D] are in the original positions.

ID Sensor and Duplex Roller

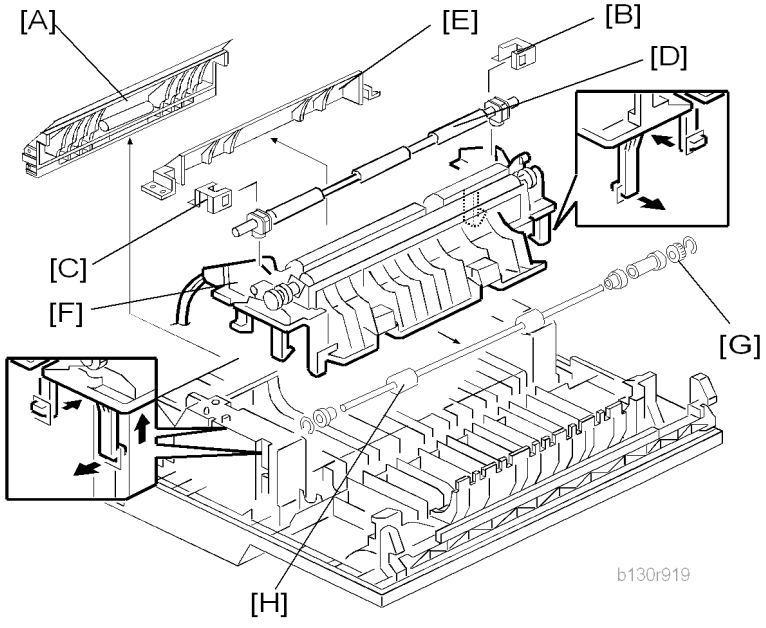

1. Right door (☛"Right Door")
2. Lower guide [A]
3. Idle roller holders [B][C]
4. Idle roller [D]
5. Roller guide [E]
6. Transfer unit [F]
7. One-way gear [G] (ℂ x 1)
8. Duplex roller [H] (ℂ x 1, 3 bushings)

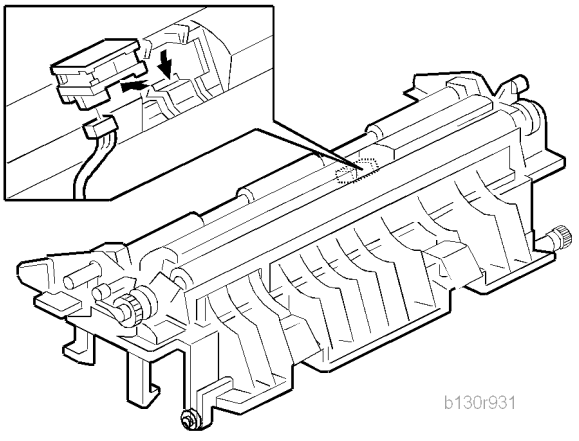

9. ID sensor (☞ x 1)

Discharge plate

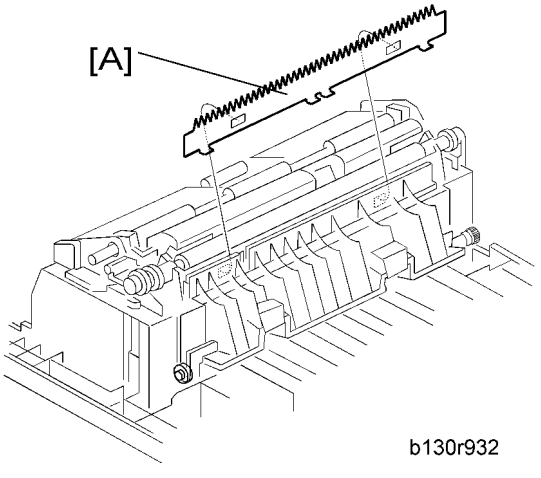

1. Right door (☛"Right Door")
2. Discharge plate [A].

BICU and Controller Board

Note that the basic model (B262/B292) and GDI models (B280/B293) have different components. The table lists the components and necessary maintenance work.

Model	BICU NVRAM	Controller Box	Controller NVRAM	Maintenance Work
Basic	Installed	None	None	Save the data from the NVRAM to a memory card before replacing the NVRAM.
GDI	Installed	Installed	Installed	• Save the data from the NVRAM to a memory card before replacing the NVRAM on the BICU. • Replace the installed NVRAM from the old controller board to the new controller board.

BICU

Preparation

- Before replacing the NVRAM, be sure to save the NVRAM data.
- Saving from the BICU NVRAM to a memory card (☛ "NVRAM Data Upload/Download (SP5-824/825)" in the section "Service Tables")

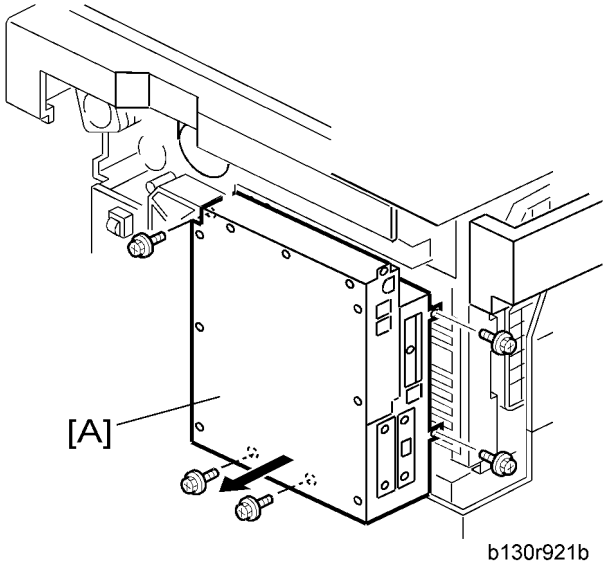

1. Rear cover (☛ "Rear Cover")

2. Bracket at the left-rear frame (basic models [B262/B292]: x 2) or controller box [A] (GDI models [B280/B293]: x 5)

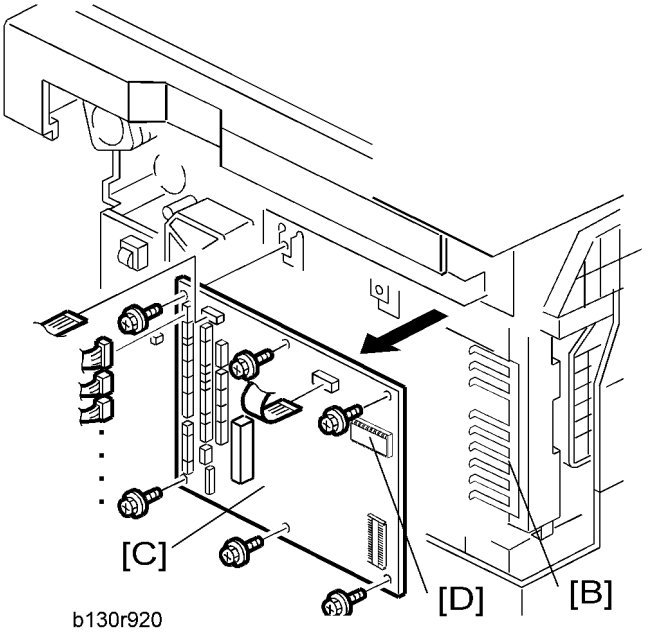

3. Ground plate [B] (x 2)
4. BICU [C] (all , 2 flat cables, x 6)

Note

- When replacing the BICU, remove the NVRAM [D] from the board. Install the NVRAM to the new board.

5. After replacing the NVRAM, copy the saved data to the NVRAM.
   - From a memory card to the NVRAM (☛ "NVRAM Data Upload/Download (SP5-824/825)" in the section "Service Tables")

Controller Board (B280/B293 models only)

1. Rear cover (☛ "Rear Cover")

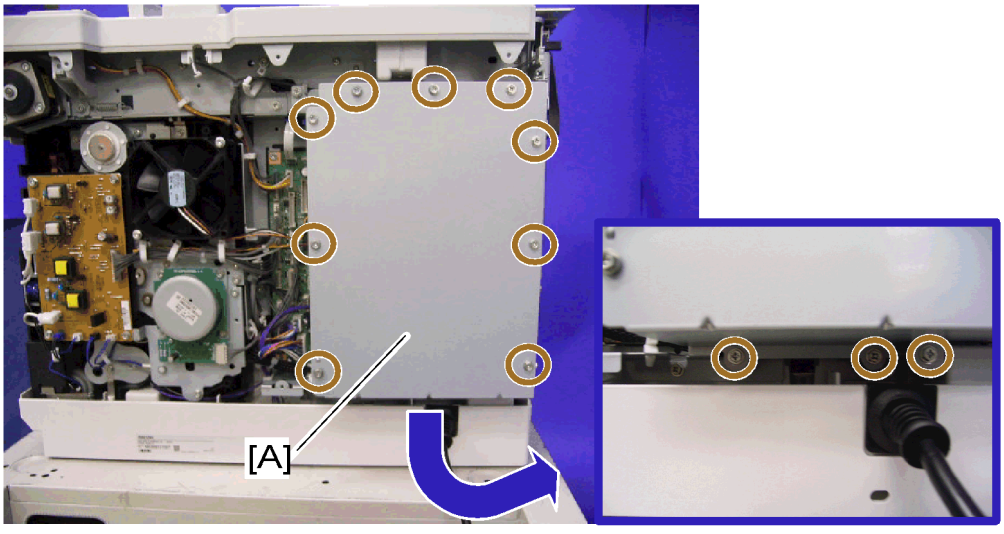

b262r502

2. Controller box cover [A] (x 12)

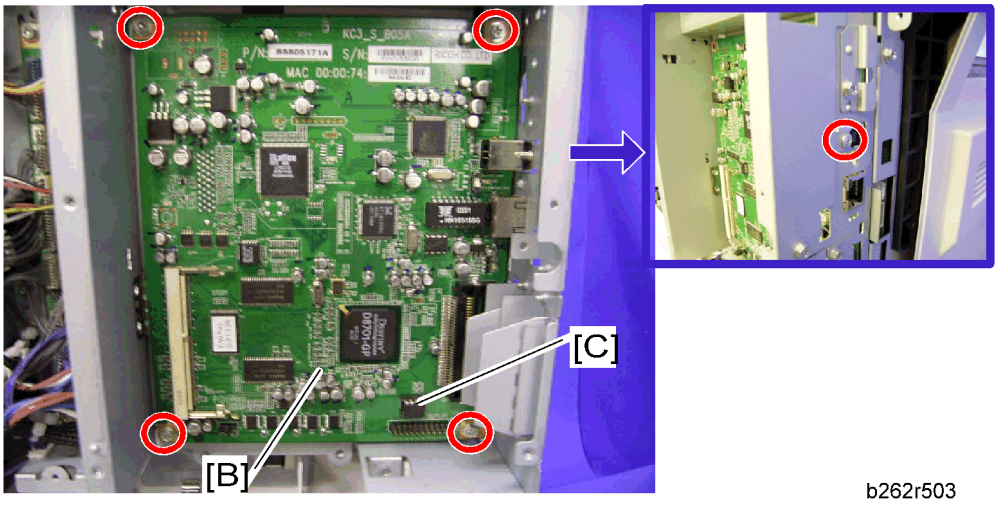

b262r503

3. Controller board [B] (x 5)

Note

- When replacing the controller board, remove the NVRAM [D] from the board. Install the NVRAM to the new board.

When replacing the NVRAM on the controller board

When you replace the NVRAM [C], make sure that the NVRAM is correctly installed.

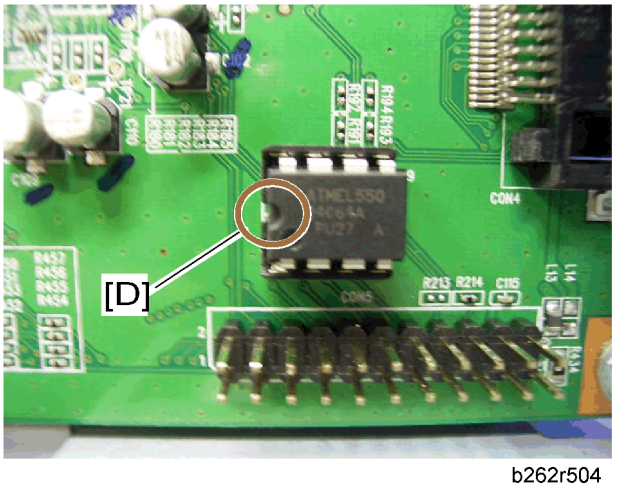

b262r504

The mark [D] on the NVRAM is directed to the right side (seem from the front).

Other Replacements

Duplex Motor

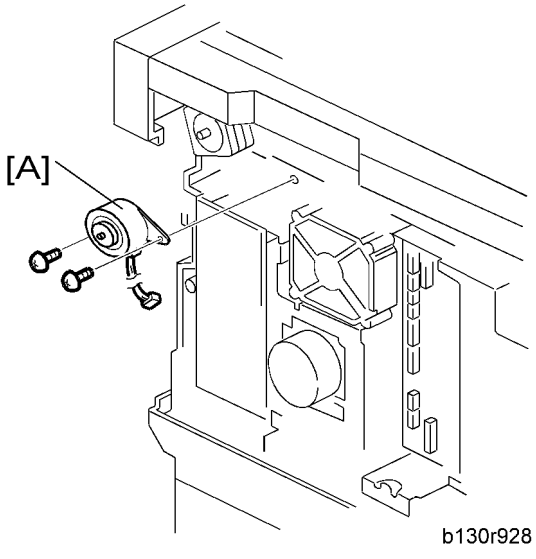

1. Rear cover (☛ "Rear Cover")
2. Duplex motor [A] (x 1, x 2)

High-Voltage Power Supply Board

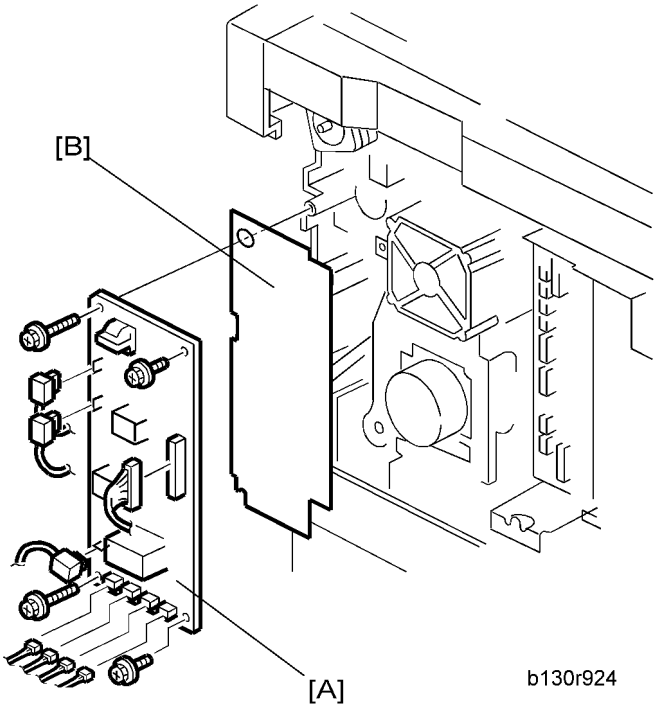

1. Rear cover (☛ "Rear Cover")
2. High-voltage power supply board [A] (all ☞, 🔧 x 4)

Note

- Remove the insulating sheet [B] if you are going to remove the contact-release solenoid (☛ "Contact-Release Solenoid") or the gear cover (☛ "Paper Feed and Registration Clutches").

PSU

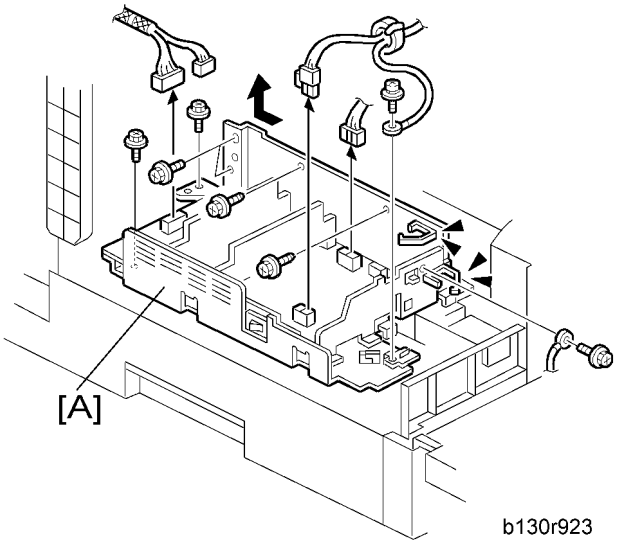

1. Open the front door.
2. Copy tray (☛ "Copy Tray")
3. PSU assembly [A] (x 4, x 8)

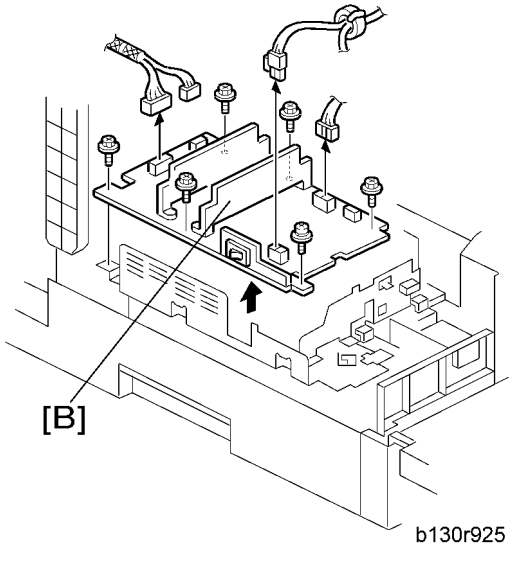

4. PSU [B] (x 1, x 6)

Note

- The North America models do not have the connector.

Contact-Release Solenoid

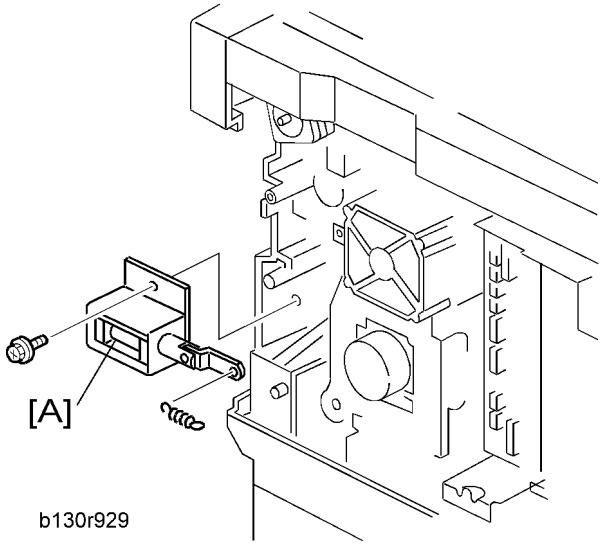

1. Rear cover (☛ "Rear Cover")
2. High-voltage power supply board (☛ "High-Voltage Power Supply Board")
3. Contact-release solenoid (1 spring, 🔩 x 1)

Toner Supply Clutch

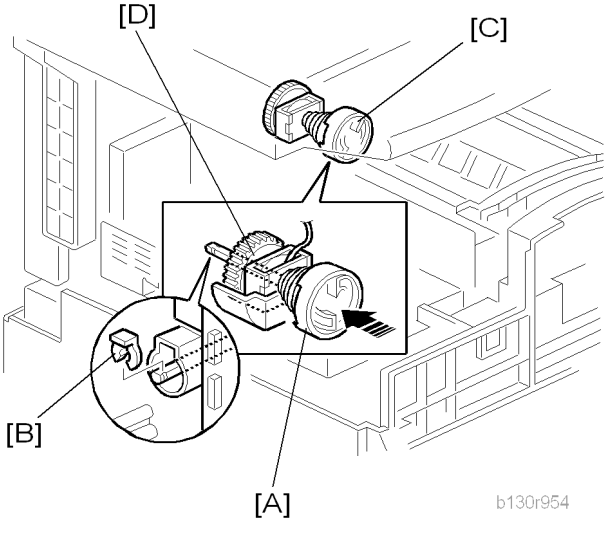

1. Toner bottle holder

2. Copy tray (☛ "Copy Tray")
3. Rear cover (☛ "Rear Cover")
4. Disconnect the connector on C19 on the BICU.
5. Push the clutch coupler [A] to the rear side, and remove the clip ring [B] from the back of the copier.
6. Coupler and spring [C]
7. Lift the toner supply clutch [D] and remove it.

Note

- When removing, note how the wire goes through a clamp, and also note where it passes through the rear of the machine.

Laser Unit

⚠WARNING

- Turn off the main power switch and unplug the copier before starting replacement. The laser beam can damage your eyes severely.

⚠CAUTION

- Do not touch the screws on the LD board on the LD unit. Do not try to adjust any part of the LD unit. The LD unit is precision adjusted before shipment.
- Do not touch the polygon mirror, shield glass, or lenses with your bare hands.

Location of the Caution Decal

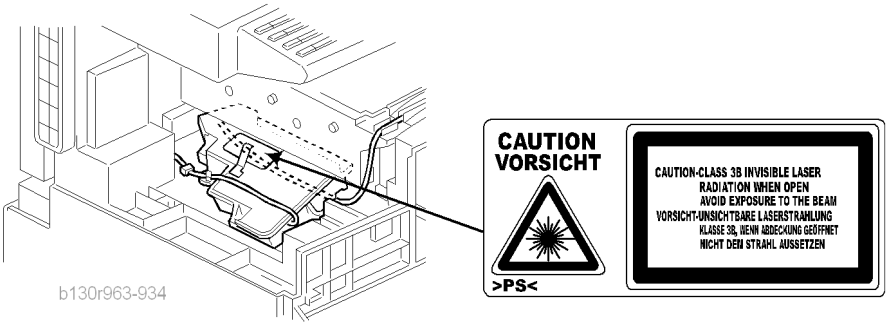

Laser Unit

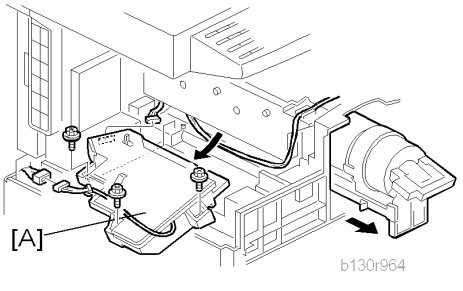

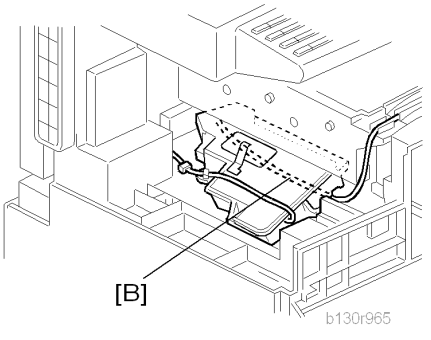

1. PSU assembly (☛ "PSU")
2. Toner bottle holder

3. Laser unit [A] (x 3, x 2)

Reassembling

Make sure that the cable [B] passes under the unit.

LD Unit and Polygon Mirror Motor

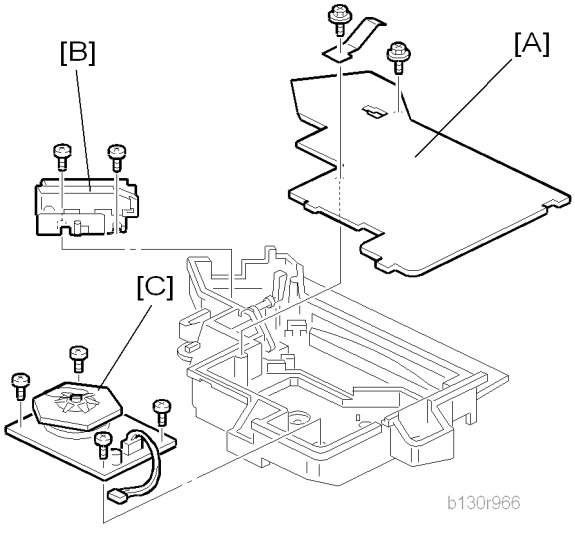

1. Laser unit (☛ "Laser Unit")
2. Laser unit cover [A] (x 2, 1 grounding plate)
3. LD unit [B] (x 2)
4. Polygon mirror motor [C] (x 4)

Reassembling

Check that the polygon mirror and toroidal lens are clean. Dust or other foreign substances may interfere with the operation of the LD unit.

Adjusting Copy Image Area

Adjust the copy image area under any of the following conditions:

1. After clearing engine data (SP5-801-002 or SP5-998-001).
2. After replacing any of the following components:
    - First scanner or second scanner
    - Lens block
    - Scanner motor
    - Polygon mirror motor
    - Paper tray

Printing

Make sure that the paper is correctly loaded in each paper tray before starting the adjustment procedures in this section.

Adjusting Registration

Use the Trimming Area Pattern (SP5-902-001 > 10) for this adjustment.

1. Print out the test pattern with the paper fed from the regular paper tray.
2. Print out the test pattern with the paper fed from the by-pass tray.
3. Print out the test pattern by selecting duplex printing.

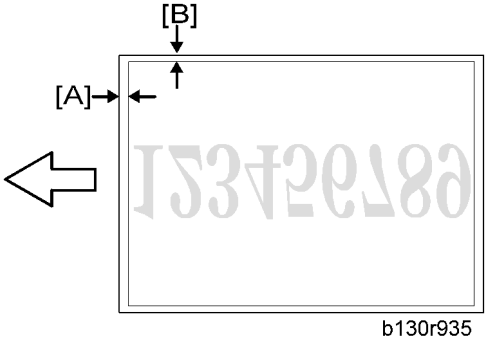

4. Measure the distance between the leading edge of the image area and the leading edge of the paper [A].

Note

- The diagram shows the paper on the copy tray. Note that the paper is output with the face down.

SP	Specification
SP1-001-001 (All Trays)	0 ± 2 mm
SP1-001-002 (By-pass)	0 ± 2 mm
SP1-001-003 (Duplex)	0 ± 4 mm

5. Adjust the leading edge registration (SP1-001).
6. Measure the distance between the side edge of the image area and the side edge of the paper [B].

SP	Specification
SP1-002-001 (1st tray)	0 ± 2 mm
SP1-002-002 (2nd tray)	0 ± 2 mm
SP1-002-005 (By-pass)	0 ± 4 mm
SP1-002-006 (Duplex)	0 ± 4 mm

7. Adjust the side-to-side registration (SP1-002).
8. Specify "0" (zero) in SP5-902-001 after finishing the adjustment procedure.

Adjusting Blank Margin

Use the Trimming Area Pattern (SP5-902-001 > 10) for this adjustment.

1. Print out the test pattern.

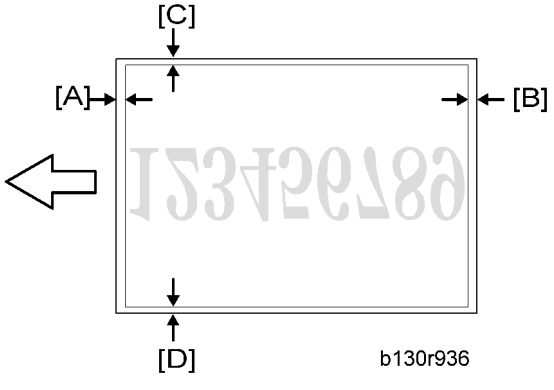

2. Measure the distance between the four edges of the image area and the four edges of the paper [A] [B][C][D].

Note

- The diagram shows the paper on the copy tray. Note that the paper is output with the face down.

3. Adjust the blank margin (SP2-101).

SP	Specification
SP2-101-001 (Leading Edge) [A]	2 ± 1.5 mm
SP2-101-002 (Trailing Edge) [B]	2 +2.5/-1.5 mm
SP2-101-003 (Left Side) [C]	2 ± 1.5 mm
SP2-101-004 (Right Side) [D]	2 +2.5/-1.5 mm

Note

- The "Left Side" and "Right Side" comes to your left-hand side and right-hand side respectively when you view the copied image with the leading edge upwards.

4. Specify "0" (zero) in SP5-902-001 after finishing the adjustment procedure.

Adjusting Main-Scan Magnification

Use the Grid Pattern (Single Dot) (SP5-902-001 > 5) for this adjustment.

SP	Specification
SP2-998-001 (Main Mag-print)	100 ± 1%

1. Print out the test pattern.
2. Measure the sides of squares. Each side should be 2.7-mm long.)
3. Adjust the main-scan magnification (SP2-998-001: Main Mag-print).
4. Specify "0" (zero) in SP5-902-001 after finishing the adjustment procedure.

Scanning

Preparation

- Before adjusting scanning, adjust printing (☛ "Printing" in this section).
- To adjust scanning, use the A4 test chart.

Adjusting Registration

1. Place the test chart on the exposure glass. Make sure that the test chart is aligned with the rear and left scales on the exposure glass.

2. Make a copy.

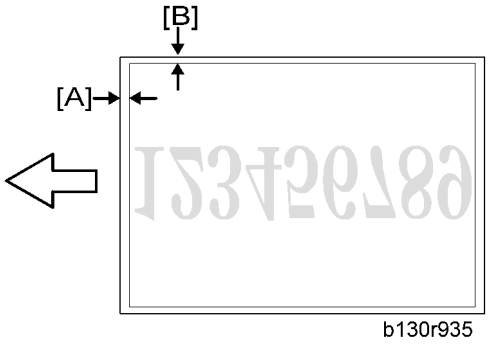

3. Measure the distance between the leading edge of the image area and the leading edge of the paper [A].

Note

- The diagram shows the paper on the copy tray. Note that the paper is output with the face down.

4. Adjust the leading-edge scan registration. (SP4-010-001).

SP	Specification
SP4-010-001 (LE Scan Regist)	0 ± 2 mm

5. Measure the distance between the side edge of the image area and the side edge of the paper [B].
6. Adjust the side-to-side registration (SP4-011-001).

SP	Specification
SP4-011-001 (S-to-S Scan Regist)	0 ± 2 mm

Adjusting Magnification

b130r938

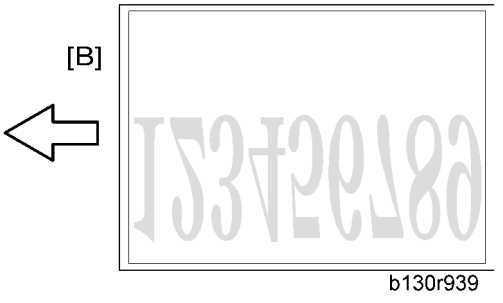

b130r939

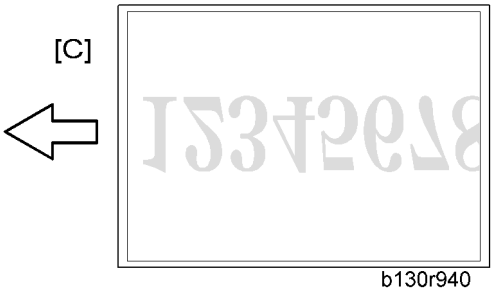

b130r940

1. Place the test chart on the exposure glass. Make sure the test chart is aligned with the rear and left scales on the exposure glass.
2. Make a copy.
3. Compare the copy with the original.
4. Adjust the main-scan and sub-scan magnifications. The original image [A] is magnified in the main-scan direction [B] or in the sub-scan direction [C] when you specify a larger value.

Note

- The diagrams show the paper on the copy tray. Note that the paper is output with the face down.

SP	Specification
SP4-009-001 (Main Scan Mag)	± 1.0%
SP4-008-001 (Sub Scan Mag)	± 1.0%

Scan Auto Adjustment

This procedure adjusts the standard white density level. Adjust the standard white density after any of the following maintenance work:

- Replacing the standard white plate
- Replacing the BICU

- Replacing the lens block
- Executing the memory clear (SP5-801-002 [basic model], SP5-998-001 [other models]).

1. Place 10 sheets of new A4 paper on the exposure glass.
2. Close the platen cover.
3. Activate the SP mode.
4. Select Copy SP4-428.
5. Specify "1" and press the OK key. The copier automatically adjusts the standard white density.

DF Image Adjustment

Note

- Perform the adjustment procedure in this section only when the ARDF is installed on the copier.

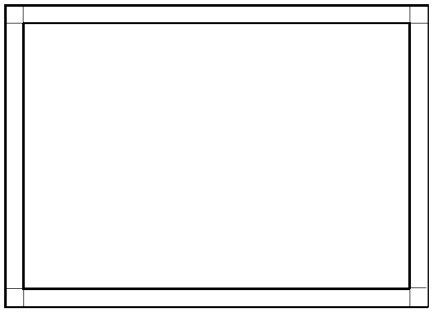

b130r967

1. Make a temporary test chart as shown in the above diagram. Use the A4/8.5 x 11" paper to make it.
2. Place the temporary test chart on the ARDF.
3. Make a copy.

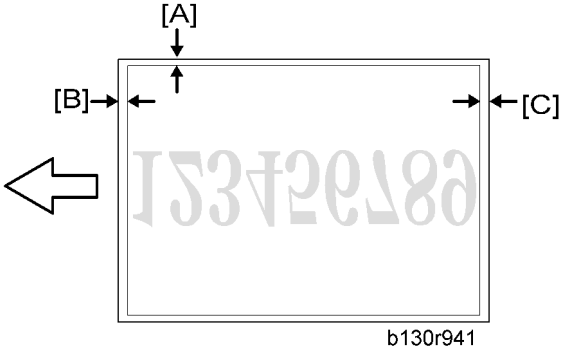

b130r941

4. Measure the distance between the side edge of the image area and the side edge of the paper [A].

(The diagram shows the paper on the copy tray. Note that the paper is output with the face down.)

5. Adjust the side-to-side registration (S to S/Front Regist: SP6-006-001, S to S/Rear Regist: SP6-006-004). The image area moves to the rear side of the copier when you specify a larger value.
6. Measure the distance between the leading of the image area and the leading edge of the paper [B].
7. Adjust the leading edge registration (Leading Regist: SP6-006-002). The image area moves to the right side of the copier when you specify a larger value.
8. Measure the distance between the trailing edge of the image area and the trailing edge of the paper [C].
9. Adjust the erased area on the trailing edge (Trailing Erase: SP6-006-003).
10. Compare the copy with the original.
11. Adjust the sub-scan magnification (SP6-006-005). The specification is ±1.0%.

4. Troubleshooting

Service Call Conditions

Summary

There are four levels of service call conditions.

Level	Definition	Reset Procedure
A	To prevent possible damage, the machine does not operate until the service representative resets the SC code.	Activate the SP mode, and turn the main power switch off and on.
B	Turning the main power stitch off and on resets the SC code if the error is caused by incorrect sensor detection.	Turn the main power switch off and on.
C	The machine operates as usual excluding the unit related to the service call.	Turn the main power switch off and on.
D	The SC history is updated. The machine operates as usual.	No SC code is displayed. Only the SC history is updated.

Note

- If a problem involves circuit boards, see if you can solve the problem by disconnecting and reconnecting all connectors before deciding to replace a circuit board.
- If a problem involves a motor lock, check the mechanical load before deciding to replace a motor or sensor.
- If working on a fax-equipped machine, switching power off and on may cause loss of data stored in the memory.

SC Code Descriptions

No.	Definition	Symptom	Possible Cause
101	B	Exposure Lamp Error	
		The scanner has scanned the white plate, but cannot detect the white level.	• Defective exposure lamp • Defective exposure lamp stabilizer

No.	Definition	Symptom	Possible Cause
			• Defective exposure lamp connector • Unclean scanner mirror • Scanner mirror out of position • Defective SBU board • Defective SBU connector • Lens block out of position • Incorrect position or width of white plate scanning (☛ SP4-015)
120	B	Scanner home position error 1	
		The scanner home position sensor does not detect the scanner leaving the home position.	• Defective scanner home position sensor • Defective scanner drive motor • Defective scanner home position sensor connector • Defective scanner drive motor connector • Defective BICU board
121	B	Scanner home position error 2	
		The scanner home position sensor does not detect the scanner coming back to the home position.	• Defective scanner home position sensor • Defective scanner drive motor • Defective scanner home position sensor connector • Defective scanner drive motor connector • Defective BICU board
141	B	SBU black level correction error	
		• The automatic SBU adjustment has failed to correct the black level three times at the pre-offset adjustment.	• Defective SBU board

No.	Definition	Symptom	Possible Cause
		• The automatic SBU adjustment has failed to correct the black level ten times at the PGA adjustment. • The automatic SBU adjustment has failed to correct the black level ten times at the offset adjustment.	
142	B	SBU white/black level correction error	
		The automatic SBU adjustment has failed to correct the white level ten times at the PGA adjustment.	• Defective exposure lamp • Unclean white plate • Incorrect position or width of white plate scanning (☛ SP4-015) • Defective SBU board
144	B	Communication Error between BICU and SBU	
		The BICU cannot correctly establish communication with the SBU.	• Loose connection of the flat cable between the BICU and the SBU • Defective flat cable between the BICU and the SBU • Defective BICU • Defective SBU
145	D	Automatic SBU adjustment error	
		The white levels of the white plate and the white paper are extraordinarily different during the Scan Auto Adjustment (☛ SP4-428-001).	• Defective exposure lamp • Unclean white plate • Incorrect position or width of white plate scanning (☛ SP4-015) • Defective BICU board • Defective SBU board
193	B	Image transfer error	
		Scanned images are not transferred to the controller memory within one minute.	• Defective BICU board • Defective controller board
198	B	Memory address error	

No.	Definition	Symptom	Possible Cause
		The BICU does not receive the memory address report from the controller within one minute.	• Inconsistency between the BICU firmware and the controller firmware • Defective BICU • Defective controller
302	B	Charge roller current leak	
		The polling module detects a current leak of the charge roller.	• Defective charge roller • Defective high voltage supply board • Loose connection of the PCU
320	B	Polygonal mirror motor error	
		The polygon mirror motor does not reach the operating speed within 10 seconds. Or, the polygon mirror motor remains out of the operating speed for 0.2 second after reaching the operating speed.	• Defective polygon mirror motor • Loose connection between the polygonal mirror motor and the BICU • Defective cable between the BICU and the polygon mirror motor • Defective BICU
321	B	No laser writing signal (F-GATE) error	
		The poling module does not detect the laser writing signal (F-GATE) asserting after the laser crosses 5 mm from the start point on the drum surface.	• Defective BICU • Loose connection on the fax controller or the printer controller • Defective fax controller or printer controller
322	B	Laser synchronization error	
		The main scan synchronization detector does not detect the laser signal for 0.5 second.	• Toner bottle not installed • Loose connection between the LD unit and the BICU • Defective cable between the BICU and LD unit • LD unit out of position • Defective LD unit • Defective BICU

No.	Definition	Symptom	Possible Cause
390	B	TD sensor error	
		The BICU detects the TD sensor outputting extraordinary voltage (less than 0.2 V or more than 4.0 V) 10 times consecutively.	• Defective TD sensor • Loose connection of the PCU
391	B	Development bias leak	
		The polling module detects a current leak of the development bias.	• Loose connection of the PCU • Defective high voltage supply board
392	B	Developer initialization error	
		The ID sensor does not detect a correct pattern during developer initialization (☛ 2-214-001).	• Defective ID sensor • Insufficient developer • Defective drum operation • Defective development roller operation • Loose connection of the PCU • Insufficient voltage for the charge roller
401	B	Transfer roller leak error (positive electrode)	
		The feedback voltage of the transfer roller is insufficient.	• Defective high voltage supply board • Loose connection of the PCU • Incorrect installation of the transfer unit or the separation unit • Defective transfer roller
402	B	Transfer roller leak error (negative electrode)	
		The feedback voltage of the transfer roller is insufficient.	• Defective high voltage supply board • Loose connection of the PCU • Incorrect installation of the transfer unit or the separation unit • Defective transfer roller
500	B	Main motor error	

No.	Definition	Symptom	Possible Cause
		The main motor does not reach its operation speed within 0.7 second. Or, the main motor remains out of its operation speed for 0.7 second after reaching the operation speed.	• Overload • Defective main motor
541	A	Fusing thermistor open error	
		The fusing temperature remains lower than the specified temperature by 20 degrees Celsius.	• Defective thermistor • Incorrect installation of the thermistor • Defective power supply unit • Loose connectors
542	A	Fusing temperature warm-up error	
		The fusing temperature rises 7 degrees or less in two seconds; and this continues 5 times consecutively. Or, the fusing temperature is not detected within 25 or 35 seconds.	• Defective thermistor • Incorrect installation of the thermistor • Defective fusing lamp • Defective power supply unit
543	A	Fusing overheat error 1	
		The fusing temperature detected by the thermistor is 230°C or higher for one second.	• Defective thermistor • Defective power supply unit
544	A	Fusing overheat error 2	
		The fusing temperature detected by the monitor circuit is 250°C or higher for one second.	• Defective thermistor • Defective power supply unit
545	A	Fusing lamp overheat error	
		After the fusing temperature reaches the target, the fusing lamp remains on for 12 seconds.	• Defective thermistor • Incorrect installation of the thermistor • Defective power supply unit
546	A	Unstable fusing temperature	

No.	Definition	Symptom	Possible Cause
		While the fusing lamp is on, the fusing temperature varies 50°C or more within one second; and this occurs two consecutive times.	• Defective thermistor • Incorrect installation of the thermistor • Defective power supply unit
547	B	Zero cross signal malfunction	
		The zero cross signal is not detected within five seconds after the main power switch is turned on. Or, the zero cross signal is not detected within one second after operation begins.	• Defective power supply unit • Defective BICU
559	A	Consecutive fusing jam	
		The paper jam counter for the fusing unit reaches 3 times. The paper jam counter is cleared if the paper is fed correctly. This SC is activated only when SP1159-001 is set to "1" (default "0").	• Paper jam in the fusing unit.
590	B	Exhaust fan motor error	
		The exhaust fan motor is locked for five seconds.	• Loose connection of the exhaust fan motor • Overload
632	C	Accounting error 1	
		An error occurs during communication with the MF accounting device.	• Defective accounting device • Loose connection
634	C	Accounting RAM error	
		An error occurs in the backup RAM for the MF accounting device.	• Defective accounting device
635	C	Accounting battery error	
		An error occurs in the battery of the MF accounting device.	• Defective accounting device
692	C	Printer board communication error	

No.	Definition	Symptom	Possible Cause
		• BICU does not get a signal from the printer board for 1.5 seconds or more. • BICU gets a break-signal after completing the communication with the printer board and does not get a signal from the printer board for 10 seconds or more.	• Defective communication between BICU and printer board
694	C	Scanner board communication error	
		• BICU does not get a signal from the scanner board for 1.5 seconds or more. • BICU gets a break-signal after completing the communication with the scanner board and does not get a signal from the scanner board for 10 seconds or more.	• Defective communication between BICU and scanner board
760	B	ADF gate error 1	
		The ADF sends the FGATE signal before it is requested to scan originals.	• Defective ADF board • Defective input/output board • Loose connection
761	B	ADF gate abnormal 2	
		The ADF does not send the FGATE signal within 30 seconds after the ADF starts scanning.	• Defective ADF connector • Defective SBU board
762	B	ADF gate abnormal 3	
		The ADF continues to send the FGATE signal for more than 60 seconds after the ADF starts scanning.	• Defective ADF connector • Defective SBU board
901	B	Mechanical total counter error	
		The polling module does not detect the mechanical total counter.	• Defective mechanical total counter

No.	Definition	Symptom	Possible Cause
			• Defective BICU • Loose connection
903	B	Engine total counter error	
		The checksum of the total counter is not correct.	• Defective NVRAM on the BICU
928	B	Memory error	
		An error occurs during the memory check conducted when the main power switch is turned on or when the copier is recovering from the energy saver mode.	• Defective memory • Defective BICU • Loose connection between the BICU and the memory
929	B	IMAC hardware error	
		A memory control job is not completed within a certain period.	• Defective IMAC • Defective BICU • Loose connection
981	B	NVRAM error	
		An error occurs during engine NVRAM check.	• Defective NVRAM • Loose connection between the BICU and the NVRAM • Incorrect installation of the NVRAM • Defective BICU
982	B	Localization error	
		The localization information in the nonvolatile ROM and in the NVRAM is different (☛ SP5-807-001).	• Localization setting not specified (The main power switch is turned on for the first time after the NVRAM is replaced.) • Incorrect localization setting • Defective NVRAM

Electrical Component Troubleshooting

Sensor/Switch Open Errors

Sensor	Connector	Message	Remarks
Registration Sensor	CN127	Paper jam	-
	SN		
Paper End Sensor	CN129	Load paper	-
	SN		
Bypass Paper End Sensor	CN130	(None)	The machine cannot detect paper on the bypass tray.
	SN		
Paper Path Sensor	CN128	Paper jam	-
	SN		
Exit Sensor	CN128	Paper jam	-
	SN		
Image Density (ID) Sensor	CN132	(None)	Print quality may become worse.
	SN		
Toner Density (TD) Sensor	CN123	SC901	The connector is shared with the mechanical total counter.
	PCU	Reset PCU correctly	-
Scanner HP Sensor	CN126	SC120	-
	SN	SC120	-
Platen Cover Sensor	CN126	SC120	-
	SN	(None)	The copier does not warm up when you open the platen cover.
DF Guide Open Sensor	DF CN103	Paper jam	-
	SN	(None)	-

Sensor	Connector	Message	Remarks
DF Original Set Sensor	DF CN103	Paper jam	-
	Sensor	(None)	Originals are not detected.
DF Registration Sensor	DF CN103	Paper jam	-
	SN		Originals are correctly transported.
Inverter Sensor	DF CN103	Paper jam	-
	SN	(None)	-
Exit Sensor	DF CN103	Paper jam	-
	SN		-
Front Door Switch	CN114	Right door open	-
	SW	Front/Right door open	The message depends on which circuit is open (white → front; blue → right).
Right Door Switch	CN114	Right door open	-
	SW	Right door open	-

CNxxx: The connector on the BICU board.

DF CNxxx: The connector on the DF connection board.

SN: The connector on the sensor.

SW: The connector on the switch.

PCU: The connector on the PCU.

Blown Fuse Conditions

All of these fuses are on the power supply unit.

Fuse	Rating		At main switch ON
	120 V	220 – 240 V	
FU1	15A/125V	8A/250 V	No response
FU2	5A/125V	2.5A/250V	No response

BICU LED Display

Number	Function
LED2	LED2 blinks in normal operation.

5. Service Tables

Service Program

Important

- **Do not let the user access the SP mode or the SSP mode. Only service representatives are allowed to access these modes. The machine operation is NOT guaranteed after any person other than service representatives accesses the SP mode or the SSP mode.**

Using SP and SSP Modes

The following two modes are available:

- SP Mode (Service Program Mode): The SP Mode includes the programs that are necessary for standard maintenance work.
- SSP Mode (Special SP Mode): The SSP Mode includes SP-Mode programs and some special programs. You need some extra knowledge to use these special programs. For details, consult your supervisor.

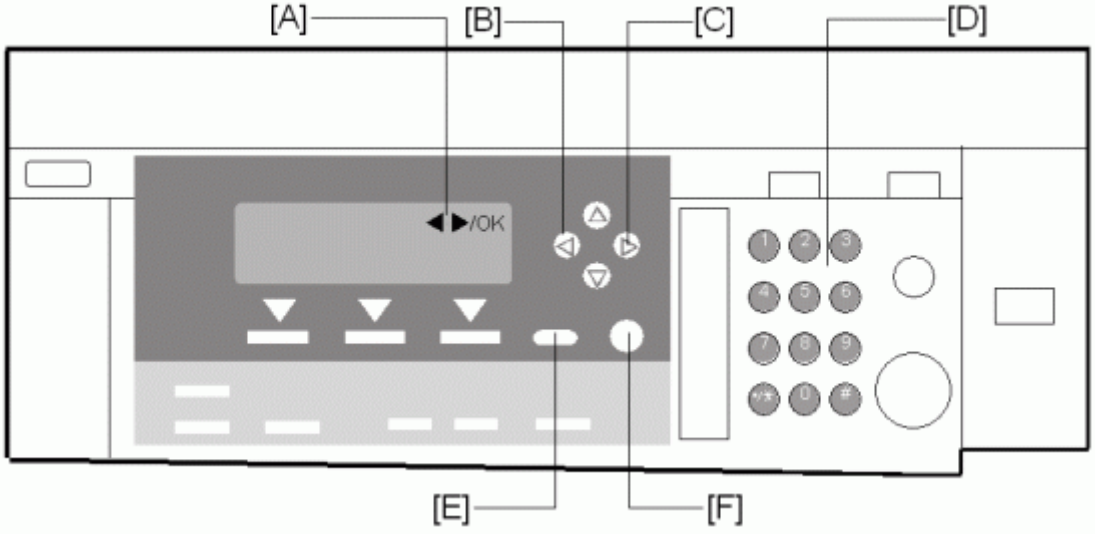

Starting SP Mode

1. Type the keys as follows: ▭ → ① → ⓪ → ⑦
2. Press the C/⊘ key and hold it down until the SP-mode menu is displayed (about 3 seconds).

Starting SSP Mode

The SSP mode is not available on the basic model (the machine without the controller box).

1. Type the keys as follows: [ ] → 1 → 0 → 7
2. Press the C/⊘ key and hold it down until the SP-mode menu is displayed (about 3 seconds).
3. Press the # key and hold it down.
4. While holding down the # key, press the 1 key (on the numeric keypad).
5. While holding down the # key, press the "OK" key.

Selecting Programs

- When a blinking underscore (or several blinking underscores) is displayed, you can type a number from the numeric keypad [D].
- When the sign "◀▶/OK" [A] is displayed upper right corner, you can scroll through the menu by pressing the left-arrow key [B] or the right-arrow key [C]. To select program, press the OK key [F].

Specifying Values

1. After locating a program, press the OK key. A blinking underscore (or several blinking underscores) indicates which value you can change. The value in parentheses is the default value of the menu.
2. Type a necessary value from the numeric keypad. To switch between positive (plus) and negative (minus) values, press the •/* key.
3. To validate the value, press the OK key. To cancel the value, press the escape key [E].

Activating Copy Mode

You can activate the copy mode while the SP mode is running. When you do so, the copier outputs images or patterns that help you adjust the SP setting.

1. Press the ◇ key. The copy mode is activated.
2. Specify copy settings and press the ◇ key.
3. To return to the SP mode, press the [ ] key.

1. You cannot end the SP mode while the copy mode is activated.

Quitting Programs/Ending (S) SP Mode

Press the [ ] key or the escape key to quit the program. You can end the SP mode by pressing one of these keys several times.

Copier Service Program Mode Tables

Conventions used in the tables:

- Asterisk (*): The settings are saved in the NVRAM. Most of them return to the default values when you execute SP5-801-002.
- DFU: The program is for design/factory use only. Do not change the settings.
- Brackets ([ ]): The brackets enclose the setting rage, default value, and minimum step with unit ([Minimum to Maximum / Default / Step]).

SP1-XXX (Feed)

1001*	Leading Edge Registration	[–9.0 to 9.0 / **0.0** / 0.1 mm/step]
1001 1	All Trays	Adjusts the leading-edge registration (☛ "Adjusting Copy Image Area" in the section "Replacement and Adjustment").
1001 2	By-pass	
1001 3	Duplex	

1002*	side-to-side Registration	[–9.0 to 9.0 / **0.0** / 0.1 mm/step]
1002 1	1st Tray	Adjusts the side-to-side registration (☛ "Adjusting Copy Image Area" in the section "Replacement and Adjustment"). SP1-002-001 is applied to all trays. SP1-002-002 and 005 adjusts the difference from SP1-002-001.
1002 2	2nd Tray	
1002 5	By-pass	
1002 6	Duplex	Adjusts the side-to-side registration of the 2nd side in duplex copying. The 1st side is adjusted by SP1-002-001 through 005.

1003*	Paper Feed Timing	Adjusts the amount of paper buckle on the registration roller.
1003 1	1st tray	[0 to 10 / **5** / 1 mm/step]
1003 3	Paper bank	[0 to 10 / **5** / 1 mm/step]
1003 4	By-pass feed	[0 to 10 / **5** / 1 mm/step]
1003 5	Duplex	[0 to 20 / **5** / 1 mm/step]

1103*	Fusing Idling	[**0** = No / 1 = Yes]	
1103 1	Enables or disables the contact-release control. The following table lists the results.		
	Setting	**0 = No**	**1 = Yes**
	C-R control	Works	Does not work
	Idling time	Shorter	Longer
	Fusing quality	Lower	Higher

1105*	Fusing Temperature Adjustment	
	Adjusts the target fusing temperature. Note that the thermistor is at the center of the hot roller.	
1105 1	Warm Up-Center	[140 to 180 / **160** / 1°C/step]
1105 3	Standby-Center	[140 to 160 / **150** / 1°C/step]
1105 5	Copying-Center	[140 to 180 / **160** / 1°C/step]
1105 7	Low Level 2-Center	[0 to 80 / **60** / 1°C/step]
1105 9	Thick-Center	[140 to 185 / **165** / 1°C/step]

1106	Display Fusing	
1106 1	Displays the fusing temperature.	

1107*	Fusing Soft Start **DFU**	
	Adjusts the number of zero-cross cycles of the fusing lamp AC supply needed to bring the fusing lamp power to 100% while bringing the lamp up to the standby temperature or while copying. Increase this value if the machine is experiencing sudden power dropouts.	
1107 1	Warm Up Soft Start	[0 = 10 cycles / 1 = 20 cycles / **2** = 50 cycles]
1107 2	Other Soft Start	[0 = 10 cycles / 1 = 20 cycles / **2** = 50 cycles / 3 = 1 cycle]
1107 3	Soft Stop Setting	[0: No / **1**: Yes]

1108*	Set-Fusing Start	[**0** = 1s / 1 = 1.5s / 2 = 2s]
1108 1	Specifies the interval for fusing-temperature control.	

1109	Nip Band Check
1109 1	Conducts the nip band check (☛ "Adjusting Nip Band" in the section "Replacement and Adjustment").

1110*	Fan Control Timer	[30 to 60 / **30** / 1 s/step]
1110 1	Specifies the fan control time. The fan motor keeps its operating speed for the specified time before changing the speed or stopping. The fan control timer prevents the exhaust fan from suddenly stopping. This function protects the copier from overheating.	

1159*	Fusing Jam SC	[**0** = Disable / 1 = Enable]
1159 1	Enables or disables consecutive jam detection at the fusing unit. If this SP is set to "1" (default: 0), consecutive fusing jam alarm occurs (SC559) when the machine detects three consecutive paper jams at the fusing unit.	

1902	Display-AC Frequency
1902 1	Displays the fusing lamp power control frequency (as detected by the zero cross signal generator). The displayed value is 1/5 the actual frequency: 10 and lower = 50 Hz, 11 and higher = 60 Hz.

1911*	By-pass Envelope	[**0** = Disabled / 1= Enabled]
1911 1	The program dedicated to envelope printing runs when you enable this program (SP1-911-001) and you select "Thick Paper" as the paper type of the by-pass tray (⌨ > System Settings > Tray Paper Settings > Paper Type: Bypass Tray).	

SP2-XXX (Drum)

2001*	Charge Roller Bias Adjustment	
2001 1	Printing	[–2100 to –1500 / **–1650** / 1 V/step]
	Adjusts the voltage applied to the charge roller for printing. The voltage changes automatically as charge-roller voltage control works. The value here is the base value for the charge-roller voltage control.	
2001 2	ID sensor pattern	[0 to 400 / **300** / 1 V/step]

	Adjusts the voltage applied to the charge roller for the ID sensor pattern (as part of charge-roller voltage correction). The charge-roller voltage is obtained by adding SP2-001-002 to the value of SP2-001-001.

2101*	Erase Margin Adjustment	Adjusts the width of the erased area (☛ "Adjusting Copy Image Area" in the section "Replacement and Adjustment").
2101 1	Leading edge	[0.0 to 9.0 / **3.0** / 0.1 mm/step] Specification: 2 ± 1.5 mm
2101 2	Trailing	[0.0 to 9.0 / **4.0** / 0.1 mm/step] Specification: 2 +2.5/–1.5 mm
	The rear trailing edge is this value plus 1.2 mm.	
2101 3	Left side	[0.0 to 9.0 / **2.0** / 0.1 mm/step] Specification: 2 ± 1.5 mm
	The rear left edge is this value plus 0.3 mm.	
2101 4	Right side	[0.0 to 9.0 / **2.0** / 0.1 mm/step] Specification: 2 +2.5/–1.5 mm
	The rear right edge is this value plus 0.3 mm.	

2201*	Development Bias Adjustment	
2201 1	Printing	[–1500 to –200 / **–650** / 1 V/step]
	Adjusts the voltage applied to the development roller for printing. Image density becomes higher when you specify a smaller value (a greater absolute value). Image density becomes lower when you specify a greater value (a smaller absolute value).	
2201 2	ID sensor pattern	[–2 = LL (220 V) / -1 = L (260 V) / **0** = N (300 V) / 1 = H (340 V) / 2 = HH (380 V)]
	Adjusts the voltage applied to the development roller for the ID sensor pattern. The voltage applied is obtained by adding SP2-201-002 to SP2-201-1. The setting affects ID sensor pattern density, which in turn affects the toner supply.	

2213*	Outputs after Near End

2213 1	[**0** = 50 pages / 1 = 20 pages] Sets the number of copy/print/fax pages that can be made after toner near-end has been detected. Reduce the number of pages if the user normally makes copies with a high image ratio.

2214	Developer Initialization
2214 1	Initializes the TD sensor toner supply target voltage and the TD sensor gain value. Execute this SP replacing the developer or the TD sensor.

2220	TD Sensor Output Value Display
2220 1	Displays: a) Vt: the current TD sensor output value and b) Vref: the target TD output value Vts (SP2-926) + correction for ID sensor output. The TD sensor output value changes every copy. If a > b, toner is supplied to the development unit.

2221	ID Sensor Error Analysis (☛ "ID Sensor Error Analysis (SP2-221)")	
2221 1	Vsg	Displays the Vsg value.
2221 2	Vsp	Displays the Vsp value.
2221 3	PWM	Displays the PWM value.
2221 4	Vsdp	Displays the Vsdp value.
2221 5	Vt	Displays the Vt value.
2221 6	Vts	Displays the Vts value.

2301*	Transfer Current Adjustment (☛"Image Transfer Current").	
2301 1	Normal paper	[–2 = –4 µA / –1 = –2 µA / **0 = 0 µA** / 1 = 2 µA / 2 = +4 µA]
	Adjusts the current applied to the transfer roller when feeding from a paper tray. Use a high setting if the user normally feeds relatively thick paper (within spec) from a paper tray	
2301 2	Thick/Special paper	[–2 = –4 µA / –1 = –2 µA / **0 = 0 µA** / 1 = 2 µA / 2 = +4 µA]

	Adjusts the current applied to the transfer roller when feeding from the by-pass tray. Use a high setting (a) if the user normally feeds relatively thick paper from the by-pass tray, or (b) if waste toner is re-attracted from the drum (which can occur when using transparencies).	
2301 3	Duplex	[–2 = –4 µA / –1 = –2 µ/ **0 = 0 µA** / 1 = 2 µA / 2 = +4 µA]
	Adjusts the current applied to the transfer roller when carrying out a duplex job. Use this SP if there is poor image transfer on the rear side of duplex copies.	
2301 4	Cleaning	[–10 to 1 / **–1** / 1 µA/step]
	Adjusts the current applied to the transfer roller for roller cleaning. Increase the current if toner remains on the roller after cleaning. (Remaining toner may cause dirty background on the rear side.)	

5

2802	Forced Developer Churning
2802 1	Initializes the developer and checks the TD sensor output (Vt). The machine mixes the developer for 2 minutes while reading and displaying the Vt value. The machine does not initialize the TD sensor output. If the machine has not been used for a long period, prints may have a dirty background. In a case like this, use this SP to mix the developer. The message "Completed" is displayed when the program ends normally.

2906*	Tailing Correction	
2906 1	Shift value	[0.0 to 1.0 / **0.0** / 0.1 mm/step]
	Shifts the image position at the intervals specified by SP2-906-002. When the copier is continuously printing vertical lines (such as in tables), the paper may not separate correctly. This SP can prevent this.	
2906 2	Interval	[1 to 10 / **1** / 1 page/step]
	Changes the interval of the image position shift specified by SP2-906-001.	

2908	Forced Toner Supply
2908 1	Supplies the toner to the development unit. The processing stops under either of the following conditions: • The toner density in the development unit reaches the standard level. • The processing has continued for two 2 minutes.

2915*	Polygon Mirror Motor Idling Time	[0 = None / **1** = 15 s / 2 = 25 s]
2915 1	Specifies the polygon mirror motor idling time. The polygon mirror motor starts its operation when an original is set, a key is pressed, or the platen cover or DF is opened. The motor stops if no manual operation is performed for the specified time. When you set "0", the motor does not stop while the copier is in the standby status.	

2921*	Toner Supply Mode
2921 1	[**0** = Sensor 1 / 1 = Sensor 2 (**DFU**)] Selects the toner supply mode. Keep the default setting as long as the TD sensor is working.

2922*	Toner Supply Time	[0.1 to 5.0 / **0.6** / 0.1 s/step]
2922 1	Adjusts the toner supply time. The toner supply motor remains on for the specified time. To validate this setting, select "0" in SP2-921-001. Specify a greater value if the user tends to make many copies having high proportions of solid black image areas.	

2926*	Standard Vt	[0.00 to 5.00 / **2.50** / 0.01 V/step] **DFU**
2926 1	Adjusts Vts (the Vt value for new developer). The TD sensor output is adjusted to this value during the TD sensor initial setting process. This SP is effective only when SP2-921001 is "0", "1", or "2".	

2927*	ID Sensor Control	[0 = No / **1** = Yes]
2927 1	Determines whether the ID sensor signal is referenced or not for the toner density control. Keep the default value in usual operations.	

2928	Toner End Clear
2928 1	Clears the following messages and counters without supplying the toner: • Toner near end message • Toner end message • Toner near end counter • Toner end counter Do not use this SP in usual operations. When the toner in the development unit is abnormally insufficient, the drum may attract the toner carrier to its surface. The toner carrier damages the drum surface..

2929*	Vref Limits	Adjust the upper or lower Vref limit.
2929 1	Upper	[0.50 to 3.50 / **3.20** / 0.01V/step] **DFU**
2929 2	Lower	[0.50 to 3.50 / **0.70** / 0.01V/step] **DFU**

2994*	ID Sensor Detection Temperature	[30 to 90 / **30** / 1 °C/step]
2994 1	Adjusts the temperature threshold. The ID sensor signal is not referenced when the fusing temperature is at the specified level or higher while the copier is recovering or starting up.	

2996*	Transfer Roller Cleaning	[**0** = No / 1 = Yes]
2996 1	Cleans or does not clean the transfer roller before each job. Select "1" if the backside of the paper becomes unclean when output. Note that the copier takes a longer time to output the first copy when you select "1". If you select "0", the transfer roller is never cleaned.	

2998*	Main Scan Magnification	[–0.5 to +0.5 / **0.0** / 0.1%/step]
2998 1	Adjusts the magnification (☛ "Adjusting Copy Image Area" in the section "Replacement and Adjustment"). The specification is 100 ± 1.0%.	

SP4-XXX (Scanner)

4008*	Sub-Scan Magnification (Scanner)	[-0.9 to +0.9 / **0.0** / 0.1%/step]
4008 1	Adjusts the sub-scan magnification (☛ "Adjusting Copy Image Area" in the section "Replacement and Adjustment").	

4009*	Main Scan Magnification (Scanner)	[–0.9 to +0.9 / **0.0** / 0.1%/step]
4009 1	Adjusts the main-scan magnification (☛ "Adjusting Copy Image Area" in the section "Replacement and Adjustment").	

4010*	Leading Edge Scan Registration	[–5.0 to +5.0 / **0.0** / 0.1 mm/step]
4010 1	Adjusts the leading edge registration (☛ "Adjusting Copy Image Area" in the section "Replacement and Adjustment").	

4011*	Side-to-side Scanner Registration	[–2.0 to +2.0 / **0.0** / 0.1 mm/step]

4011 1	Adjusts the side-to-side registration for scanning in platen mode (☛ "Adjusting Copy Image Area" in the section "Replacement and Adjustment").

4012*	Scan Erase Margin	[0 to 9.0 / **1.0** / 0.1 mm/step]
4012 1	Leading edge	Adjusts the scanning margin. Generally, the scanning margin should be as little as possible. To adjust the image area, use SP2-101.
4012 2	Trailing edge	
4012 3	Left Side	
4012 4	Right Side	

4013	Scanner Free Run
4013 1	Conducts the scanner free run with the exposure lamp on.

4015*	White Plate Scanning	
4015 1	Start position	[–3.0 to +6.0 / **0.0** / 0.1 mm/step]
	Adjusts the scanning start position on the white plate. The base value is 17.8 mm from the scanner home position. This SP specifies the offset from this base value.	
4015 2	Scanning length	[–3.0 to +6.0 / **0.0** / 0.1 mm/step]
	Adjusts the distance of the white plate scan. The scan begins from the start position (SP4-015-001) and ends at the specified distance. The base value is 2.0 mm. This SP decides the offset from this base value. Specify 0 (zero) or a larger value.	

4428	Scan Auto Adjustment
4428 1	Conducts the automatic scanner adjustment. Use this SP after replacing the white plate (☛ "Scanning" in the section "Replacement and Adjustment").

4450	Image Path	
001	BK Offset Enable	[0 or 1 / **1** / -] 0: OFF, 1: ON
	Uses or does not use the black reduction image path.	
002	SH Path Enable	[0 or 1 / **0** / 1 /step] 0: No, 1: Yes
	Uses or does not use the shading image path.	

4606	SBU Offset-Target	
4607 1	EVEN	[0 to 63 / **10** / 1 /step] Adjusts the target black level for each signal. These are used for offset adjustment in the SBU.
4607 2	ODD	
4607 3	RED	
4607 4	GREEN	
4607 5	BLUE	

4607	SBU Gain-Target	
4607 1	EVEN	[0 to 255 / **180** / 1 /step] Adjusts the target white level for each signal. These are used for gain adjustment in the SBU.
4607 2	ODD	
4607 3	RED	
4607 4	GREEN	
4607 5	BLUE	

4623	SBU Offset-Result	
4623 1	EVEN	[0 to 255 / **0** / 1 /step] Displays the result value of the offset adjustment in the SBU.
4623 2	ODD	
4623 3	RED	
4623 4	GREEN	
4623 5	BLUE	

4628	SBU Gain-Result	
4628 1	EVEN	[0 to 255 / **0** / 1 /step] Displays the result value of the gain adjustment in the SBU.
4628 2	ODD	
4628 3	RED	
4628 4	GREEN	
4628 5	BLUE	

4640	SBU Offset-Loop	
4640 1	EVEN	[0 to 10 / **0** / 1 /step] Displays the number of the offset adjustment in the SBU.
4640 2	ODD	
4640 3	RED	
4640 4	GREEN	
4640 5	BLUE	

4641	SBU Gain-Loop	
4641 1	EVEN	[0 to 10 / **0** / 1 /step] Displays the number of the gain adjustment in the SBU.
4641 2	ODD	
4641 3	RED	
4641 4	GREEN	
4641 5	BLUE	

4642	SBU Offsetpre-Loop	
4642 1	EVEN	[0 to 3 / **0** / 1 /step] Displays the number of the pre-offset adjustment in the SBU.
4642 2	ODD	
4642 3	RED	
4642 4	GREEN	
4642 5	BLUE	

4646	SBU Adj Error	
4646 1	Offsetpre-Mono	[**0** = Success / 1 = Failure] Displays the result of SBU adjustment.
4646 2	Offsetpre-Color	
4646 3	Offset-Mono	
4646 4	Offset-Color	
4646 5	Gain-Mono	

4646 6	Gain-Color	

4654*	SBU Offset-Adjust	
4654 1	EVEN	[0 to 255 / **-** / 1 /step] Displays the offset value of the offset adjustment in the SBU.
4654 2	ODD	
4654 3	RED	
4654 4	GREEN	
4654 5	BLUE	

4658*	SBU Gain-Adjust	
4658 1	EVEN	[0 to 511 / **-** / 1 /step] Displays the gain value of the gain adjustment in the SBU.
4658 2	ODD	
4658 3	RED	
4658 4	GREEN	
4658 5	BLUE	

4685*	Gray Balance-Book	
4685 1	RED	[128 to 383 / **256** / 1 /step] Adjusts the coefficient of the gray balance adjustment for the book scanning.
4685 2	GREEN	
4685 3	BLUE	

4686*	Gray Balance-DF	
4686 1	RED	[128 to 383 / **256** / 1 /step] Adjusts the coefficient of the gray balance adjustment for the DF scanning.
4686 2	GREEN	
4686 3	BLUE	

4687*	White Balance	
4687 1	Adjust	[222 to 281 / **256** / 1 /step]

		Adjust the correction value for the white plate adjustment.
4687 2	Result	Displays the current value of the white plate adjustment. If SP4-428 has not been done, this value is "0".

4690	White Peek Init	
4658 1	EVEN	[0 to 255 / **-** / 1 /step] Displays the white offset value of the pre-offset adjustment in the SBU.
4658 2	ODD	
4658 3	RED	
4658 4	GREEN	
4658 5	BLUE	

4693	Black Peek Init	
4658 1	EVEN	[0 to 255 / **-** / 1 /step] Displays the black offset value of the pre-offset adjustment in the SBU.
4658 2	ODD	
4658 3	RED	
4658 4	GREEN	
4658 5	BLUE	

4902*	Exposure Lamp ON	[**0**: OFF / 1: ON]
4902 1	Turns the exposure lamp on or off. To turn on the exposure lamp, specify “1”; to turn it off specify “0”.	

4903*	ADS Level	[0 to 255 / **252** / 1/step]
4903 1	Adjusts the ADS level.	

4904*	ADS Lower Limit	[0 to 255 / **80** / 1/step]
4904 1	Adjusts the ADS lower limit.	

4905*	ADS Level	[**0** = All / 1 = One]

4905 1	Checks the whole area (0 = All) or the specific areas (1 = One) to adjust the ADS level. The specific areas are as follows: • ARDF: ±37.5 mm from the center • Platen Cover: 15 to 90 mm from the left edge

4921*	Image Adj Selection	
4921 1	Copy	[0 to 10 / **0** / 1/step]
	Selects which mode the settings from SP4-922 to SP4-932 are used for. 0 = None, 1 = Text 1, 2 =Text 2, 3= Photo 1, 4 = Photo 2, 5 = Photo 3, 6 = Special 1, 7 = Special 2, 8 = Special 3, 9 = Special 4, 10 = Special 5	

4922*	Scanner Gamma	[**0**=System default/1=Text/2=Photo]
4922 1	Copy	Selects "text" or "photo" as the priority output mode. This setting is applied to all image processing modes of SP4-921.

4923*	Notch Selection	
	Selects the value of the center ID adjustment notch for the ID adjustment LEDs. • Normally the center notch is 3 (range 1-5). If -1 is selected, each notch shifts down (becomes lighter). If +1 is selected, each notch shifts up (becomes darker). • This setting is applied to all image processing modes of SP4-921.	
4923 1	Copy	[–1 = Light / **0** = Normal / +1 = Dark]

4926*	Texture Removal	
	Adjusts the texture removal level that is used with error diffusion. 0: The default value for each mode is used. Text 1, Photo 2, Special 2, and Special 5 have a default of 3 and Photo 1, 3 have a default of 6. 1: No removal applied. 2 – 6: Removal applied at the level specified here. The higher the setting (level), the less clear the image will become (more texture removal). This setting is only applied to the originals in SP4-921.	
4926 1	Copy	[0 to 6 / **0** / 1/step]

4927*	Line Width Correction	
	Adjusts the line width correction algorithm. Positive settings produce thicker lines; negative settings produce thinner lines. This setting is only applied to the originals in SP4-921.	
4927 1	Copy	[–2 to 2 / **0** / 1/step]

4928*	Independent Dot Erase	
	Selects the dot erase level. Higher settings provide greater erasure. This setting is only applied to the originals in SP4-921.	
4928 1	Copy	[–2 to 2 / **0** / 1/step]

4929*	Positive/Negative	[**0** = No, 1 = Yes]
4929 1	Copy	Inverts white and black. This setting is only applied to the originals in SP4-921.

4930*	Sharpness-Edge	[–2 to 2 / **0** / 1/step]
4930 1	Copy	Adjust the clarity. This setting is only applied to the originals in SP4-921.

4931*	Sharpness-Solid	[–2 to 2 / **0** / 1/step]
4931 1	Copy	Adjust the clarity. This setting is only applied to the originals in SP4-921.

4932*	Sharpness-Low ID	[–2 to 2 / **0** / 1/step]
4932 1	Copy	Adjust the clarity. This setting is only applied to the originals in SP4-921.

4941*	White Line Erase	[0 to 2 / **1** / 1/step]
4941 1	Selects the white line erase level. 0: None 1: Weak 2: Strong • This setting is effective for all modes. • 0: White line erase is not used, and white level correction is used instead. • This setting is applied regardless of what mode has been selected in SP4-921.	

4942*	Black Line Erase	[0 to 3 / **2** / 1/step]
4942 1	Selects the black line erase level. This setting is effective only when originals are scanned by the DF. [0 = No / 1 = Very weak / 2 = Weak / 3 = Strong] This setting is applied regardless of what mode has been selected in SP4-921.	

SP5-XXX (Mode)

5001	All Indicators On
5001 1	Turns on all LEDs. The LCD turns on or off every 3 seconds. Press the reset key to end this program.

5045*	Display-Counter	[0 or 1 / 0 / -] 0: 1 counter, 1: 2 couters
5045 1	Displays the number of the installed couter.	

5113*	Optional Counter Type	**0:** None 1: Key Card20+ 2: Key Card20– 11: Key Card4+ 12: Key Card4–
5113 1	Selects the corresponding key for installed devices such as coin lock.	

5120*	Clear-OP Count Remove	[**0**=Yes / 1=Standby only / 2=No]
5120 1	Specifies the condition to reset the copy job settings when the key counter is removed. • 0 = Yes: The settings are cleared when the counter is removed. • 1 = Standby only: The settings are cleared when the counter is removed at the end of a job. • 2 = No: The settings are not cleared under either condition. As for duplex copying, the job settings are always preserved regardless of these setting.	

5121*	Count Up Timing	[**0** = Feed In / 1 = Exit]

5121 1	Selects the count-up timing. • 0 = Feed: At each paper feed • 1= Exit: At each paper exit

5501*	PM Alarm Interval	[0 to 9999 / **0** / 1K copies/step]
5501 1	Printout	Specifies when the PM alarm occurs.

5801	Memory Clear (basic model only)
5801 2	Engine (☛ "Memory Clear" in this section)

5802	Machine Free Run
5802 1	Conducts machine free run (including the scanner unit). Press “ON” to start; press “OFF” to stop.

5803	Input Check
	☛ "Input Check" in this section.

5804	Output Check
	☛ "Output Check" in this section.

5807*	Area Selection
5807 1	Selects the display language. 2 North America, 3 Europe, 5 Asia, 6 China SP5-807-001 is not cleared by SP5-801-002. **NOTE:** SC982 is displayed if you specify a language that is inconsistent with your local model.

5811*	Serial Num Input
5811 1	☛ "Serial Number Input" in this section.

5812*	Service TEL

5812 1	Telephone
	Specifies the telephone number of the service representative. (The number is displayed when a service call condition occurs.) To input a dash, press #. To delete the current telephone number, press C/E.
5812 2	Facsimile
	Specifies the fax number printed on user counter reports. To input a dash, press #. To delete the current fax number, press C/E.

5824	NVRAM Upload
5824 1	☛ "NVRAM Upload/Download" in this section.

5825	NVRAM Download
5825 1	☛ "NVRAM Upload/Download" in this section.

5827	Program Download (☛ "Firmware Update Procedure" in this section)
5827 1	Copies the software program from the IC card to the flash ROM. To execute this SP, ① turn off the main power switch, insert the IC card, ③ press the power key and hold it down, and ④ turn on the main power switch (while you keep holding the power key). The copier reads the software program from the IC card if you turn on the copier like this. The SP mode is automatically activated.

5901	Printer Free Run
5901 1	Executes the free run. Press "ON" to start; press "OFF" to stop.

5902	Test Pattern Print
5902 1	☛ "Test Pattern Print" in this section.

5907*	Plug & Play Setting
5907 1	Selects the brand name and production name for the Plug and Play function. These names are stored in the NVRAM. When the NVRAM data is corrupted, select these names once again. Use the right-arrow or left-arrow key to scroll through the list of brand names. To select a brand name, press the OK key. An asterisk (*) indicates which manufacture is currently selected.

5912*	PCU Alarm Counter (Printout)	[0 to 255 / 45 / 1/step]
5912 1	Specifies the PCU alarm level. The PCU alarm is issued when the following condition is met: PAc x 1000 >= PCUc where PAc is the value specified in this SP and PCUc is the PCU counter. When you specify 0 (zero), the PCU alarm is deactivated.	

5990	SMC Print	
5990 1	All	☛ "SMC Print" in this section.
5990 2	SP	
5990 3	User Program	
5990 4	Logging Data	
5990 5	Big font	

SP6-XXX (Peripherals)

6006*	ADF Adjustment (☛ "DF Image Adjustment" in the "Adjusting Copy Image Area") **NOTE:** Available menus depend on the machine model and its configuration.	
6006 1	StoS/Front Regist	[–5.0 to +5.0 / **0.0** / 0.1 mm/step]
	Adjusts the side-to-side registration for the front side of the original, for ARDF mode. Use the ⊡ key to select "+" or "–" before entering the value	
6006 2	Leading Regist	[–5.0 to +5.0 / **0.0** / 0.1 mm/step]
	Adjusts the leading edge registration for ARDF mode. Use the ⊡ key to select "+" or "–" before entering the value.	
6006 3	Trailing Erase	[–3.0 to +3.0 / **–1.5** / 0.1 mm/step]
	Adjusts the trailing edge erase margin for ARDF mode. Use the ⊡ key to select "+" or "–" before entering the value.	
6006 4	S to S/ Rear Regist	[–5.0 to +5.0 / **0.0** / 0.1 mm/step]
	Adjusts the side-to-side registration for the 2nd side of the original, for ARDF mode. Use the ⊡ key to select "+" or "–" before entering the value	

6006 5	Sub-scan Magnif	[–0.9 to +0.9 / **0.0** / 0.1 %/step]
	Adjusts the sub-scan magnification for the ARDF.	
6006 6	Origin Curl Adj	[0 = No / **1** = Yes]
	Turns on or off the skew correction at 2nd side scanning. This SP is activated only when the duplex mode is selected.	
6006 7	Skew Correction	[–20 to +20 / **0.0** / 1 mm/step]
	Adjusts the original buckle for the skew correction at 2ns side scanning. This SP is activated only when SP6-006-006 is set to "1 (Yes)".	

6009	ADF Free Run	
6009 1	Duplex Mode	
	Performs an ARDF free run in duplex scanning mode. Press "ON" to start; press "OFF" to stop.	
6009 3	Simplex Mode	
	Performs an ARDF free run at simplex scanning mode. Press "ON" to start; press "OFF" to stop.	

6910*	ADF Shading Time	[0 to 60 / **30** / 1 s/step]
6910 1	Adjusts the interval used for the shading processing in the ARDF mode. Light and heat in the room may affect the scanner response. Reduce this setting if copy quality indicates that the white level is drifting during ARDF copy jobs.	

SP7-XXX (Data Log)

7001*	Total Operation
7001 1	Displays the total operation time (total drum rotation time).

7401*	Counter–SC Total	[0 to 9999 / **0** / 1/step]
7401 1	Displays how many times SC codes are generated.	

7403*	SC History

7403 1	Displays the histories of the latest 10 SC codes.

7502*	Counter–Paper Jam	[0 to 9999 / **0** / 1/step]
7502 1	Displays the total number of copy paper jams.	

7503*	Counter–Orgn Jam	[0 to 9999 / **0** / 1/step]
7503 1	Displays the total number of original jams,	

7504*	Counter-Each P Jam	[0 to 9999 / **0** / 1/step]
	Displays the total number of the paper jams classified by timing and location.	
7504 1	At power on	
	Paper jam occurs at power on.	
7504 10	Off-Regist NoFeed	
	Paper does not reach the registration sensor (from a paper tray).	
7504 11	Off-1 Vertical SN	
	Paper does not reach the relay sensor.	
7504 12	On-1 Vertical SN	
	Paper is caught at the relay sensor.	
7504 50	Off-Regist Bypass	
	Paper does not reach the registration sensor (from the by-pass tray).	
7504 60	Off-Regist Duplex	
	Paper does not reach the registration sensor during reverse-side printing (for duplex printing).	
7504 70	On-Regist SN	
	Paper is caught at the registration sensor.	
7504 120	On-Exit SN	
	Paper is caught at the exit sensor (previous page).	

7504 121	Off-Exit SN
	Paper does not reach the exit sensor.
7504 122	On-Exit SN
	Paper is caught at the exit sensor.
7504 123	Off-Dup Inverter
	Paper does not reach the duplex inverter sensor (from the registration roller).
7504 125	On-Dup Inverter
	Paper is caught at the duplex inverter sensor.

7505*	Counter-Each O Jam	[0 to 9999 / 0 / 1/step]
	Displays the total number of the original jams on the ARDF that have occurred at a certain timing or at a certain location.	
7505 210	Off-Regist SN	
	The original does not reach the registration sensor.	
7505 211	On-Regist SN	
	The original is caught at the registration sensor.	
7505 212	Off-Relay SN	
	The original does not reach the exit sensor.	
7505 213	On-Relay SN	
	The original is caught at the exit sensor.	
7505 214	Off-Inverter SN	
	The original does not reach the inverter sensor.	
7505 215	On-Inverter SN	
	Not used in this machine.	
7505 216	Insufficient gap	
	The distance between originals is not sufficient. This jam can occur when the original is not of the standard size.	

7507*	Display-P Jam History
7507 1	Displays the latest 10 paper-jam history. The list below shows the possible 12 codes: 1, 10, 11, 12, 50, 60, 70, 120, 121, 122, 123, 125 The codes correspond to the menus of SP7-504. For example, the code 1 corresponds to SP7-504-001, and the code 10 corresponds to SP7-504-10.

7508*	Display-O Jam History
7508 1	Displays the total number of the original-jams history. The possible codes are 210, 211, and 216. The codes correspond to the menus of SP7-505. For example, the code 210 corresponds to SP7-505-210, and the code 211 corresponds to SP7-505-211.

7801	Memory/Version/PN
7801 2	Memory/Version (BICU)
	Displays the version of the BICU board
7801 15	Printer/Scanner
	Displays the version of the controller board.

7803*	Display–PM Count
7803 1	Displays the PM counter.

7804	Reset–PM Counter
7804 1	Resets the PM counter (SP7-803-001). When the program ends normally, the message "Completed" is displayed.

7807	Reset–SC/Jam Counters
7807 1	Resets the SC, paper, original, and total jam counters. When the program ends normally, the message "Completed" is displayed. SP7-807-1 does not reset the following logs: SP7-507 (Display-Paper Jam History) and SP7-508 (Display-Original Jam History).

7808	Reset–Counters

7808 1	Resets all counters except for the management counters. The management counters are the counters that are not changed by NVRAM Download (SP5-825-001; ☛ "NVRAM Data Upload/Download"). When the program ends normally, the message the message "Completed" is displayed.

7810	Reset–Key Op Code
7810 1	Resets the key operator code. Use SP7-810-1 when the customer has forgotten the key-operator code. If the customer has forgotten the key operator code, a new one can be specified by using: User Tools: System Settings → Key Operator Tools → Key Operator Code → On → Enter Key Operator Code. When the program ends normally, the message "Completed" is displayed, if the program ends abnormally, an error message is displayed.

7832*	Display-Self-Diag
7832 1	Displays the SC codes and the number of their occurrences. Each number is in the range of 0 to 9999.

7991*	Dsply–Info Count
	Displays the total operating time or the total number of operations. The time is displayed in the following format: day: hour: minute: second.
7991 1	Dsply-Timer Count
	The total of the time when the main switch is kept on (excluding the time when the safety switch is off).
7991 3	Dsply-ID S Work
	The total of the time when the ID sensor is working.
7991 4	Dsply-Dev Counter
	The total number of paper outputs.
7991 5	Dsply-ID Er Count
	The total number of ID-sensor errors.

7992*	Reset-Info Count
7992 1	Reset-Timer Count

	Clears the timer counter (SP7-991-001).
7992 4	Reset-Dev Count
	Clears the development counter (SP7-991-004).
7992 5	Reset-ID Er Count
	Clears the ID sensor error counter (SP7-991-005).

SP8-XXX (History)

8191*	T: Total Scan PGS	[0 to 9999999 / **0** / 1 sheet/step]
8191 1	Displays the total number of scanned originals. Both sides are counted when the front and reverse sides of an original (fed from the DF) are scanned.	

8192*	C: Total Scan PGS	[0 to 9999999 / **0** / 1 sheet/step]
8192 1	Displays the total number of scanned originals in copy mode. Both sides are counted when the front and reverse sides of an original (fed from the DF) are scanned.	

8195*	S: Total Scan PGS	[0 to 9999999 / **0** / 1 sheet/step]
8195 1	Displays the total number of scanned originals in scanner mode. Both sides are counted when the front and reverse sides of an original (fed from the DF) are scanned.	

8221*	ADF Org Feed	[0 to 9999999 / **0** / 1 sheet/step]
8221 1	Front	
	Displays the total number of scanned front sides of originals fed from the DF.	
8221 2	Back	
	Displays the total number of scanned 2nd sides of originals fed from the DF.	

8381*	T: Total Prt PGS	[0 to 9999999 / **0** / 1 sheet/step]
8381 1	Displays the print count of all application programs.	

8382*	C: Total Prt PGS	[0 to 9999999 / **0** / 1 sheet/step]

8382 1	Displays the print count of the copier application program.

8384*	P: Total Prt PGS	[0 to 9999999 / **0** / 1 sheet/step]
8384 1	Displays the print count of the printer application program.	

8411*	Prints/Duplex	[0 to 9999999 / **0** / 1 sheet/step]
8411 1	Displays the total count of the duplex printing.	

8422*	C: PrtPGS/Dup Comb	[0 to 9999999 / **0** / 1 sheet/step]
8422 1	Simplex > Duplex	Displays the total print count of copier application classified by combination/duple type.
8422 2	Duplex> Duplex	
8422 4	Simplex Combine	
8422 5	Duplex Combine	
8422 6	2> (2 in 1)	
8422 7	4> (4 in 1)	

8441*	T: PrtPGS/Ppr Size	[0 to 9999999 / **0** / 1 sheet/step]
8442*	C: PrtPGS/Ppr Size	
8444*	S: PrtPGS/Ppr Size	
-2	A4	Displays the number of pages printed by each copier application program.
-3	A5	
-5	B5	
-7	LG	
-8	LT	
-9	HLT	
-254	Other (Standard)	
-255	Other (Custom)	

8451*	C: PrtPGS/Ppr Tray	[0 to 9999999 / **0** / 1 sheet/step]
8451 1	Bypass Tray	Displays the total print count classified by paper source.
8451 2	Tray 1	
8451 3	Optional Tray	

8461*	T: PrtPGS/Ppr Type	[0 to 9999999 / **0** / 1 sheet/step]
8462*	C: PrtPGS/Ppr Type	
8464*	S: PrtPGS/Ppr Type	
-1	Normal	Displays the total number of pages printed by each copier application program.
-4	Thick	
-7	OHP	
-8	Other	

8522*	C:PrtPGS/FIN	[0 to 9999999/ **0** / 1/step]
8522 1	Sort	The SP counts by finishing mode the total number of pages printed by the Copy application.

ID Sensor Error Analysis (SP2-221)

The image quality may become very bad when the ID sensor does not operate properly. However, there is no such SC code that indicates ID-sensor malfunction; instead, SP2-221 shows you some information on the ID sensor. Check this information when the image quality is not very good.

The table lists the information shown with SP2-221 (ID Sensor Error Analysis).

SP	Error condition	Possible cause	Remarks
SP2-221-1 Vsg (VG in the display)	Vsg < 2.5V or (Vsg – Vsp) < 1.00V	• ID sensor defective • ID sensor dirty • Drum not charged	-
SP2-221-2 Vsp (VP in the display)	Vsp > 2.5V or (Vsg – Vsp) < 1.00V	• Toner density very low • ID sensor pattern not created	-

SP2-221-3 Power (PW in the display)	Vsg < 3.5V when maximum power (979) is applied	• ID sensor defective • ID sensor dirty • Drum not get charged	Power source for the ID-sensor light
SP2-221-4 Vsdp	No Error Conditions		-
SP2-221-5 Vt	Vt > 4.5V or Vt < 0.2V	• TD sensor defective	-
SP2-221-6 Vts	-	-	-

Memory Clear

Basic and GDI Model

This model (the machine without the controller box) stores all the data in the NVRAM on the BICU. The data is cleared by SP5-801-002 (for exceptions, see "").

Exceptions

SP5-801-002 clears most of the settings and counters stored in the NVRAM on the BICU (the values return to their default values). However, the following settings are not cleared:

- SP5-807 (Area Selection)
- SP5-811-001 (Serial Num Input > Code Set)
- SP5-812-001 (Service TEL > Telephone)
- SP5-812-002 (Service TEL > Facsimile)
- SP5-907-001 (Plug & Play)
- SP7 (Data Log)
- SP8 (History)

Initializing Memory Data

Use SP5-801-002 after you have replaced the BICU NVRAM or when the BICU NVRAM data is corrupted. When the program ends normally, the message "Completed" is displayed. When you have replaced the controller NVRAM or when the controller NVRAM data is corrupted, use SP5-801-001.

Executing Memory Clear

1. Upload the NVRAM data to a flash memory card (☛ "NVRAM Data Upload/Download").
2. Print out all SMC data lists (☛ "SMC Print").

   Note

   - Be sure to print out all the lists. You have to manually change the SP settings if the NVRAM data upload ends abnormally.
3. Select SP5-801-002.
4. Press the OK key.
5. Select "Execute." The messages "Execute?" followed by "Escape" and "Execute" are displayed.
6. Select "Execute."
7. When the program has ended normally, the message "Completed" is displayed. If the program has ended abnormally, an error message is displayed.
8. Press the escape key.
9. Turn the main switch off and on.
10. Download the NVRAM data from a flash memory card (☛ "NVRAM Data Upload/Download").

INPUT CHECK (SP5-803)

Conducting Input Check

1. Select SP5-803.
2. Select the number (see the table below) corresponding to the component.
3. Select "Execute." The copy mode is activated.
4. The sign "01H" or "00H" is displayed (see the table below).

Input Check Table

Num.	Sensor/Switch	1h	0h
001	Safety SW	Open	Closed
003	Right Cover SW	Open	Closed
005	Tray Cover SW	Open	Closed
006	Upper Relay S	Paper detected	Not detected

Num.	Sensor/Switch	1h	0h
009	Registration Sensor	Paper detected	Not detected
010	Exit Sensor	Paper detected	Not detected
011	Duplex Inverter S	Paper detected	Not detected
014	By-pass PE S	Paper detected	Not detected
016	Upper PE S	Paper detected	Not detected
017	Lower PE S	Paper detected	Not detected
027	PCU Set Signal	Installed	Not installed
028	Optional Tray	*	*
030	Duplex Installed	Installed	Not installed
032	Main M Lock	Locked	Not locked
033	Polygon M Lock	Locked	Not locked
035	Total CO Install	Installed	Not installed
036	Key CO Install	Installed	Not installed
037	L-Synchronization	Detected	Not detected
039	DF-Cover Open S	Open	Closed
040	DF-Original Set S	Paper detected	Not detected
041	DF-Registration S	Paper detected	Not detected
042	DF-Exit S	Paper detected	Not detected
044	DF-Reverse S	Paper detected	Not detected
045	Platen Cover S	Open	Closed
050	Fan Motor Lock (High speed)	High speed	Low speed or stop
052	Front Cover SW	Open	Closed
053	HP Sensor	Detected	Not detected

* Available Paper Feed Unit

00	None
30	1-tray paper feed unit

OUTPUT CHECK (SP5-804)

Conducting Output Check

⚠CAUTION

- To prevent mechanical or electrical damage, do not keep an electrical component on for a long time.

1. Select SP5-804.
2. Select the number (see the table below) corresponding to the component.
3. Select "ON."
4. To stop the operation, select "OFF."

Output Check Table

Num.	Component
001	Main Motor Forward
002	Main Motor Reverse
003	Quenching Lamp
004	Toner Supply Clutch Forward
005	Fan Motor High
006	Fan Motor Low
007	Registration Clutch
008	By-pass Feed Clutch
009	Upper Feed Clutch
010	Lower Feed Clutch
017	BK-Lift Motor
020	Duplex Inv Motor Reverse

Num.	Component
021	Duplex Inv Motor Forward
024	Duplex Inv Motor Hold
026	Polygon Motor
027	Polygon M/LD
028	LD
029	DF-Feed M
030	DF-Transport M
031	DF-Feed Clutch
034	DF-Gate SOL (Junction Gate Solenoid)
038	Fusing Solenoid
039	Fast Dup Inv M-Rev
042	Scan Fgate-Mono
043	Scan Fgate-Color

When checking Fan Motor High (005) or Fan Motor Low (006) note the following:

- These motors may not respond when the fusing temperature is high.
- Selecting "ON" checks that one of these motors normally operates. Selecting "OFF" turns off the motor that you have started by selecting "ON." However, this does not guarantee that the motor normally stops during normal operation.

SERIAL NUMBER INPUT (SP5-811-001)

Specifying Characters

SP5-811-001 specifies the serial number. For the basic model (the machine without the controller box), you use the numeric keypad.

A serial number consists of 11 characters. You can change each character by pressing one of the first 11 keys on the numeric keypad (①, ②, ③, ... ⑨, ⊛/⌘, ⓪). For example, when you press the ① key, the first character of the serial number changes as follows: 0 → 1 → 2 → ... → 8 → 9 → A → B → ... → X → Y → Z. When you press the ② key, the second character changes likewise.

You can specify a digit ("0" to "9") or a capital letter ("A" to "Z") for the first four characters of a serial number, and you can specify a digit in the other seven characters (not capital letters).

Serial Number and NVRAM

Serial numbers are stored in the NVRAM before shipment and are not cleared by any program. You must specify a serial number after you replace the NVRAM.

NVRAM DATA UPLOAD/DOWNLOAD (SP5-824/825)

⚠CAUTION

- Make sure that you turn off the main power switch before inserting or removing a flash memory card. Data in the memory may be corrupted if you insert or remove the memory card with the main power switch on.

This section illustrates how to copy the data from the BICU NVRAM to a memory card (☛ "NVRAM Data Upload/Download" writing onto open space on card) or from a memory card to the BICU NVRAM (☛ "NVRAM Data Upload/Download"). For the workflow to copy the data in the controller NVRAM, see **xxx**.

Overview

You can copy the data from the NVRAM to a flash memory card (NVRAM Upload) or from a flash memory card to the NVRAM (NVRAM download).

SP5-824-1 (NVRAM Upload)	From the BICU to a flash memory card
SP5-825-1 (NVRAM Download)	From a flash memory card to the BICU

You should execute NVRAM Upload before replacing the NVRAM or before executing SP5-801-002 (Memory Clear > Engine). You can copy back the data from the flash memory card to the NVRAM as necessary.

NVRAM Upload (SP5-824-001)

1. Turn off the main switch.
2. Remove the memory card cover [B] (x 1).
3. Turn the face of the flash memory card [A] ("A" is printed on it) to the rear of the copier, and insert it into the card slot [C].
4. Turn on the main power switch.
5. Activate the SP mode and select SP5-824-001.
6. The copier overwrites the data in the memory card with the data in the NVRAM. This takes about 20 seconds. If uploading fails, an error message appears. If an error message appears, retry the upload procedure.
7. Turn off the main power switch.
8. Remove the memory card.

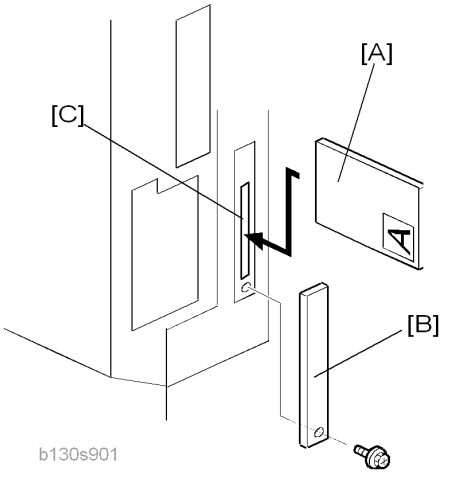

NVRAM Download (SP5-825-001)

SP5-825-001 copies the data from a flash memory card to the NVRAM. Most of the data in the NVRAM is overwritten. The following data in the NVRAM remains unchanged (these are not overwritten):

- SP8-221-001 (ADF Original Feed > Front)
- SP8-381-001 (Total: Total Printer Pages)
- SP8-382-001 (Copy Application: Total Print Pages)
- SP8-411-001 (Prints/Duplex)

1. Turn off the main power switch.
2. Remove the memory card cover [B] (x 1).
3. Turn the face of the flash memory card [A] ("A" is printed on it) to the rear of the copier, and insert it into the card slot [C].
4. Turn on the main switch.
5. Activate the SP mode and select SP5-825-001.
6. The copier overwrites the data in the NVRAM with the data in the memory card. This takes about one second. If downloading fails, an error message appears. If an error message appears, retry the download procedure.
7. Turn off the main power switch.
8. Remove the memory card.

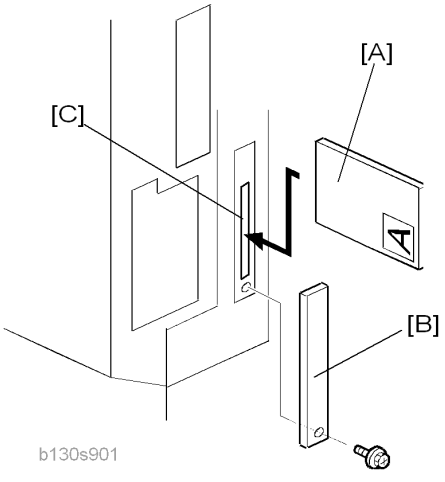

Firmware Update Procedure

This section illustrates how to update the firmware.

1. Turn the main power switch off.

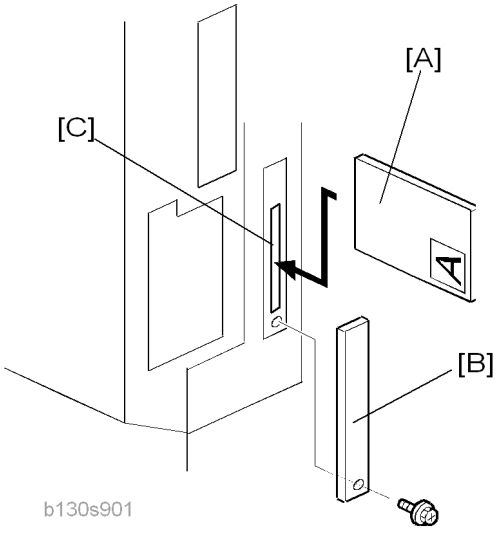

2. Remove the memory card cover [B] (x 1).
3. Turn the face of the flash memory card [A] ("A" is printed on it) to the rear of the copier, and insert it into the card slot [C].

4. Press down the power switch on the operation panel and hold it, and turn on the main power switch.

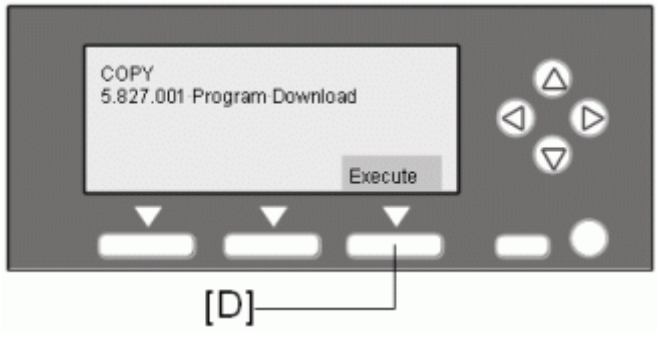

5. Press the "Execute" key [D]. The program starts running.

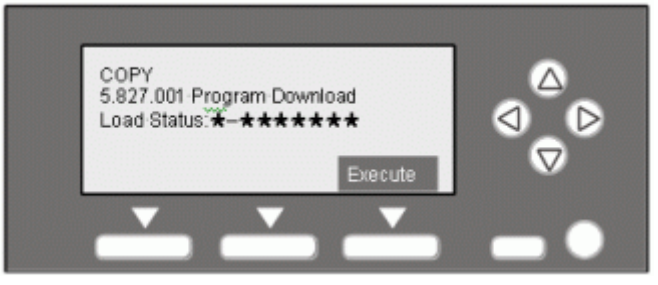

6. Do not touch any key while the message "Load Status..." is displayed. This message indicates that the program is running.

7. Check that the message "End Sum..." is displayed. This message indicates that the program has ended normally.
8. Turn off the main power switch.
9. Remove the flash memory card.
10. Attach the memory card cover.
11. Turn the main power switch on, and check the operation.

TEST PATTERN PRINT (SP5-902-001)

Executing Test Pattern Printing

1. Specify the pattern number and press the OK key.
2. Press the copy start key. The copy mode is activated (☛ "Using SP and SSP Modes" in this section).
3. Specify copy settings and press the ◇ key.
4. To return to the SP mode, press the ⇦ key.

Test Patterns

Test Patterns Using VCU	
No.	Pattern
0	(No print)
1	Vertical Lines (Single Dot)
2	Horizontal Lines (Single Dot)
3	Vertical Lines (Double Dot)
4	Horizontal Lines (Double Dot)
5	Grid Pattern (Single Dot)
6	Grid Pattern (Double Dot)
7	Alternating Dot Pattern
8	Isolated One Dot
9	Black Band (Horizontal)
10	Trimming Area
11	Argyle Pattern (Single Dot)
12	Grayscales (Horizontal)
13	Grayscales (Vertical)
14	Grayscales (Vertical/Horizontal)
15	Grayscales (Vertical/Horizontal Overlay)

16	Grayscales With White Lines (Horizontal)
17	Grayscales with White Lines (Vertical)
18	Grayscales with White Lines (Vertical/Horizontal)

Test Patterns Using IPU	
No.	Pattern
30	Vertical Lines (Single Dot)
31	Horizontal Lines (Single Dot)
32	Vertical Lines (Double Dot)
33	Horizontal Lines (Double Dot)
34	Isolated Four Dots
35	Grid Pattern (Double Dot)
36	Black Band (Vertical, 1024 Dots)
37	Grayscales (Horizontal, 512 Dots)
38	Grayscales (Vertical, 256 Dots)
39	ID Patch
40	Cross
41	Argyle Pattern (128-Dot Pitch)
42	Square Gradation (64 Grades)
43	Square Gradation (256 Grades)
44	Grayscales (Horizontal, 32-Dot Width)
45	Grayscales (Vertical, 32-Dot Width)
47	A4 Gradation Patches 1 (128 Grades)
48	A4 Gradation Patches 2 (128 Grades)
49	Trimming Area (A4)

	Test Patterns Using SBU

No.	Pattern
51	Grid Pattern (double dot)
52	Gray Scale 1 (256 grades)
53	Gray Scale 2 (256 grades)

	Test Patterns Using PCI*1
No.	Pattern
61	S2M: Grid Pattern
62	S2M: Argyle Pattern
63	S2M: Argyle Pattern
64	S2M: Argyle Pattern + Image*2
65	S2M: Grid Pattern
66	S2M: Grid Pattern + Image
67	S2M: Argyle Pattern
68	S2M: Argyle Patten + Image
69	Engine: Grid Pattern
70	Engine: Argyle Pattern

*1: The PCI is available to the models with the controller box.
*2: The original image on the exposure glass is printed behind the test pattern.

SMC Print (SP5-990)

SP5-990 outputs machine status lists.

1. Select SP5-990.
2. Select a menu:
   - 001 All, 002 SP, 003 User Program, 004 Logging Data, or 005 Big Font

   Note

   - The output given by the menu "Big Font" is suitable for faxing.
3. Press the "Execute" key.

- The copy mode is activated (☛ "Using SP and SSP Modes" in this section"). Specify copy settings and press the ⓞ key. The machine status lists its output.

4. To return to the SP mode, press the ⎋ key.

Printer Service Program Mode Table

SP No.	Description	Function and Setting
1003	Clear Setting	Not used
1005	Display Version	Displays the version of the controller firmware.

Scanner Service Program Mode Table

SP1	Mode Number		Function and [Setting]
1005*	1	Erase Margin	Creates an erase margin for all edges of the scanned image. If the machine has scanned the edge of the original, create a margin. [0 to 5 / **0** / 1mm/step]

For the settings of the image quality, see "Scanning" in the section "Replacement and Adjustment".

6. Detailed Section Descriptions

Overview

Component Layout

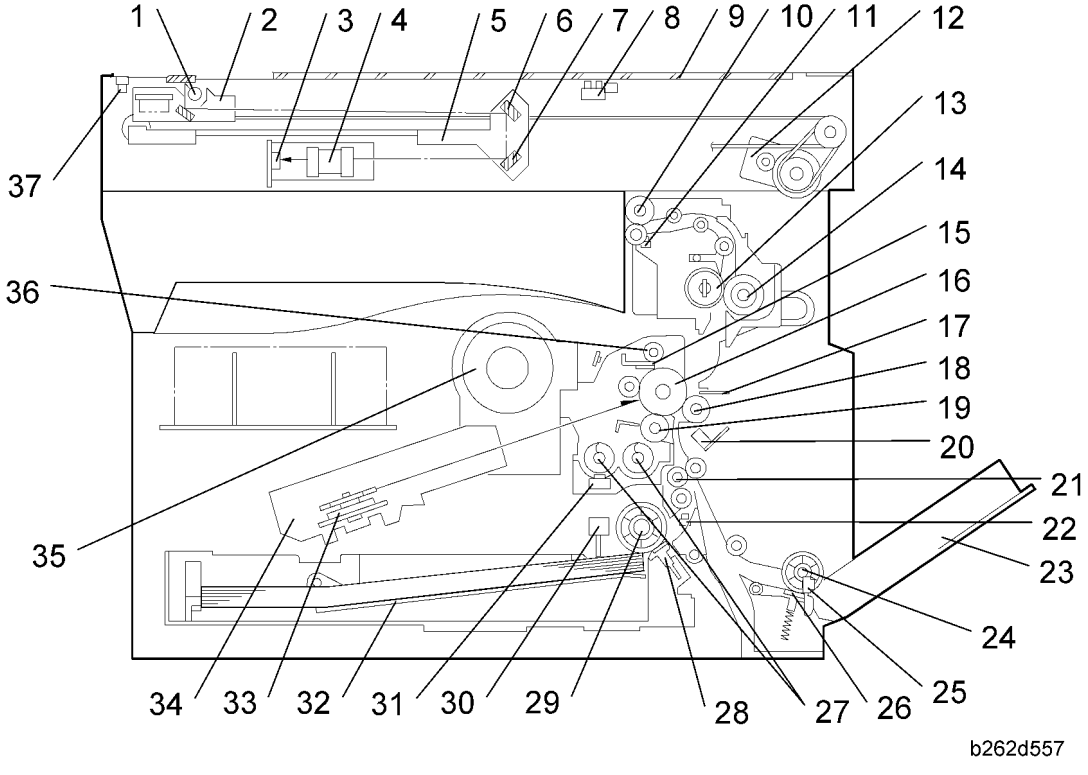

Note

- The above illustration shows models B262/B280/B293. Model B292 has standard ARDF. For ARDF component layout, refer to the service manual for ARDF DF1000 (B872).

1. Exposure Lamp	20. ID (Image Density) Sensor
2. 1st Scanner	21. Registration Roller
3. CCD (on SBU)	22. Registration Sensor
4. Lens Block	23. Bypass Tray
5. 2nd Scanner	24. Bypass Paper Feed Roller
6. 2nd Mirror	25. Bypass Paper End Sensor

7. 3rd Mirror 8. Platen Cover Sensor 9. Exposure Glass 10. Exit Roller 11. Exit Sensor 12. Scanner Motor 13. Hot Roller 14. Pressure Roller 15. Cleaning Blade 16. OPC Drum 17. Discharge Plate 18. Transfer Roller 19. Development Roller	26. Bypass Friction Pad 27. Mixing Augers 28. (Main) Friction Pad 29. Paper Feed Roller 30. Paper End Sensor 31. TD (Toner Density) Sensor 32. Bottom Plate 33. Polygon Mirror Motor 34. Laser Unit 35. Toner Supply Bottle (or THM) 36. Toner Collection Coil 37. Scanner HP Sensor

Electrical Components

Electrical Components 1

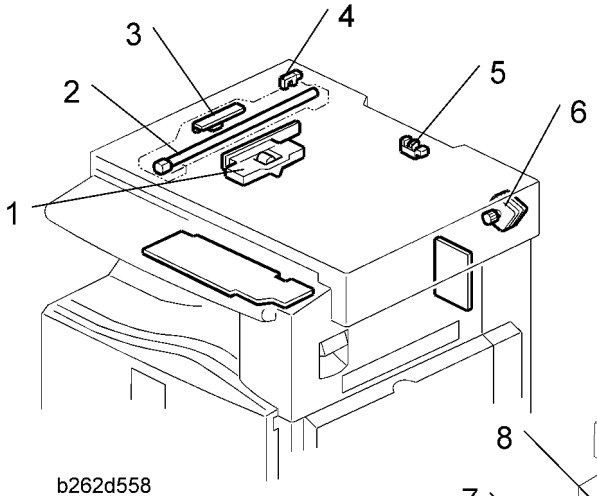

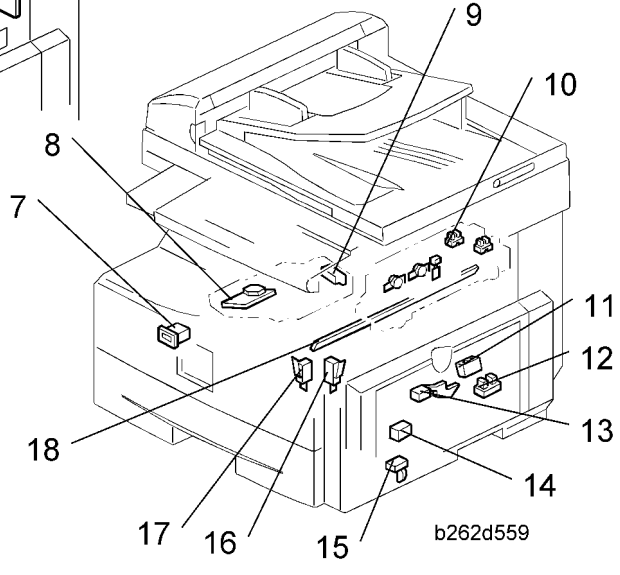

1. Lens Block	10. Exit Sensor
2. Exposure Lamp	11. ID (Image Density) Sensor
3. Lamp Stabilizer Board	12. Registration Sensor
4. Scanner HP Sensor	13. Paper End Sensor
5. Platen Cover Sensor	14. Toner Density Sensor
6. Scanner Motor	15. Bypass Paper End Sensor
7. Mechanical Counter	16. Right Door Safety Switch
8. Polygon Mirror Motor	17. Front Door Safety Switch
9. LD Unit	18. Quenching Lamp

Note

- For ARDF electrical components, refer to the service manual for ARDF DF1000 (B872).

Electrical Components 2

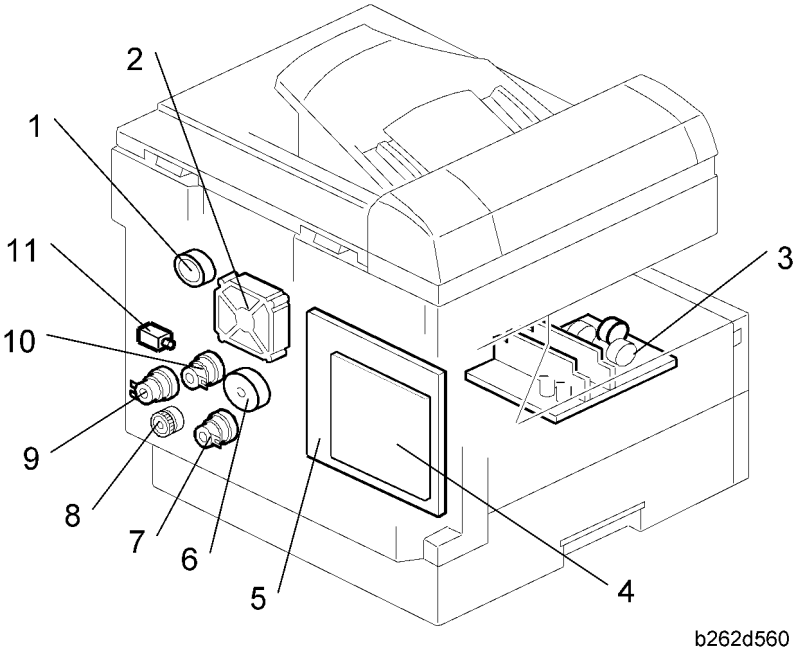

1. Duplex Motor 2. Exhaust Fan 3. PSU 4. Controller Board (GDI) 5. BICU 6. Main Motor	7. Paper Feed Clutch 8. Toner Supply Clutch 9. Bypass Feed Clutch 10. Registration Clutch 11. Fusing Solenoid

Paper Path

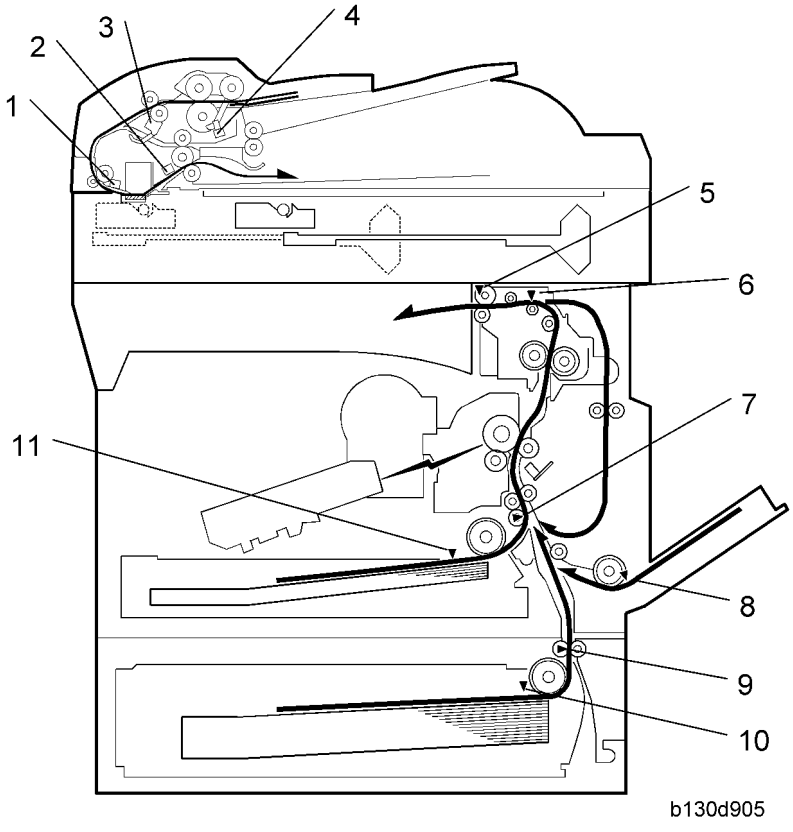

1. Original Registration Sensor (Document Feeder)
2. Exit Senor (Document Feeder)
3. Inverter Sensor (Document Feeder)
4. Original Set Sensor (Document Feeder)
5. Exit Sensor
6. Paper Path Sensor
7. Registration Sensor
8. By-pass Paper End Sensor
9. Paper Feed Sensor (Optional Tray)
10. Paper End Sensor (Optional Tray)
11. Paper End Sensor

Drive Layout

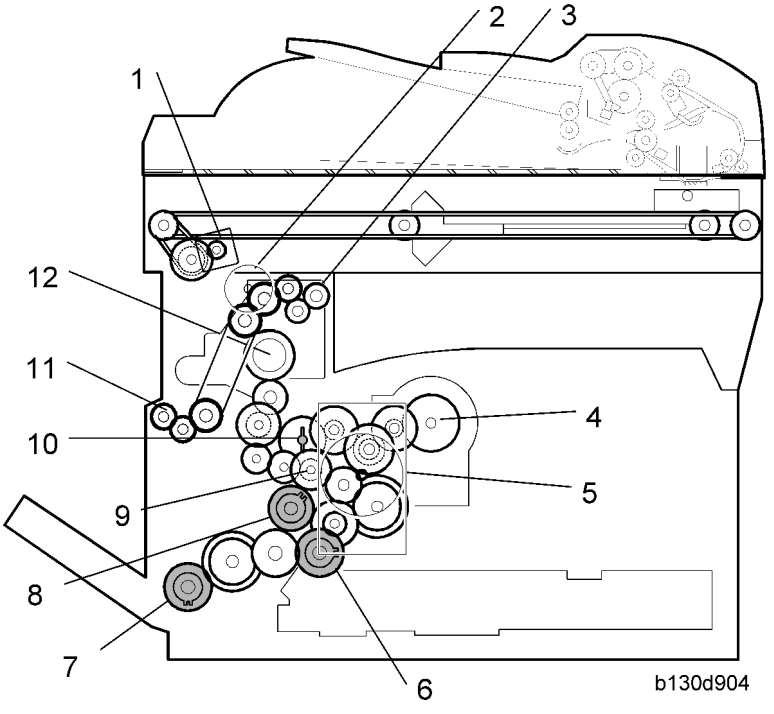

1. Scanner Motor
2. Duplex motor
3. Exit Roller
4. Toner Bottle Clutch
5. Main Motor
6. Paper Feed Clutch
7. Bypass Feed Clutch (By-pass Tray)
8. Registration Clutch
9. Developer Driver Gear
10. Drum Drive Gear
11. One-way Gear (Duplex Unit)
12. Fusing Drive Gear

Note

- For DF drive layout, refer to the service manual for ARDF DF1000 (B872).

Block Diagram: PCBs and Components

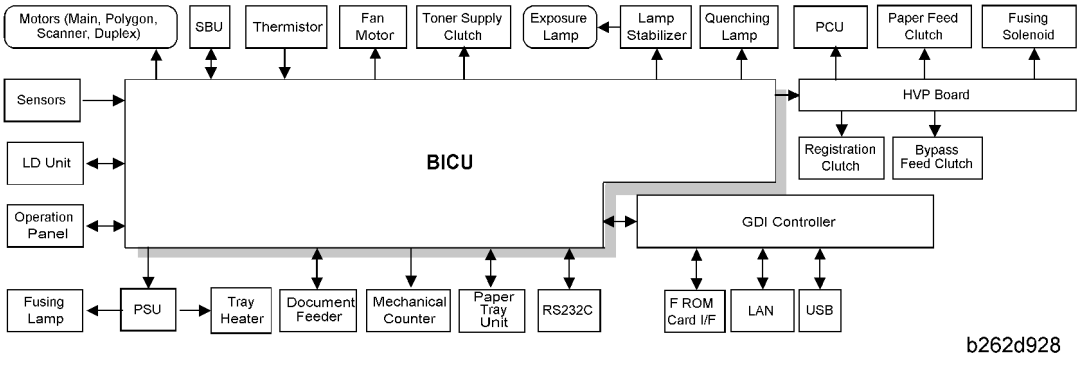

This table lists available units and components for each model.

Model	Document Feeder	Printer/ Scanner	Fax*	Controller
Basic Model (B292) for North America	Standard	Optional	Not available	Distributed with the optional printer/scanner
Basic Model (B262) for Europe/China	Optional	Not available	Not available	Not available
GDI Model (B280) for Europe/Asia	Optional	Standard	Not available	GDI controller
GDI Model (B293) for Europe	Optional	Standard	Not available	GDI controller

This table lists available interfaces for the GDI models.

	B280	B293
Ethernet	–	Standard
USB 2.0	Standard	Standard

Main PCBs

SBU (SENSOR BOARD UNIT)

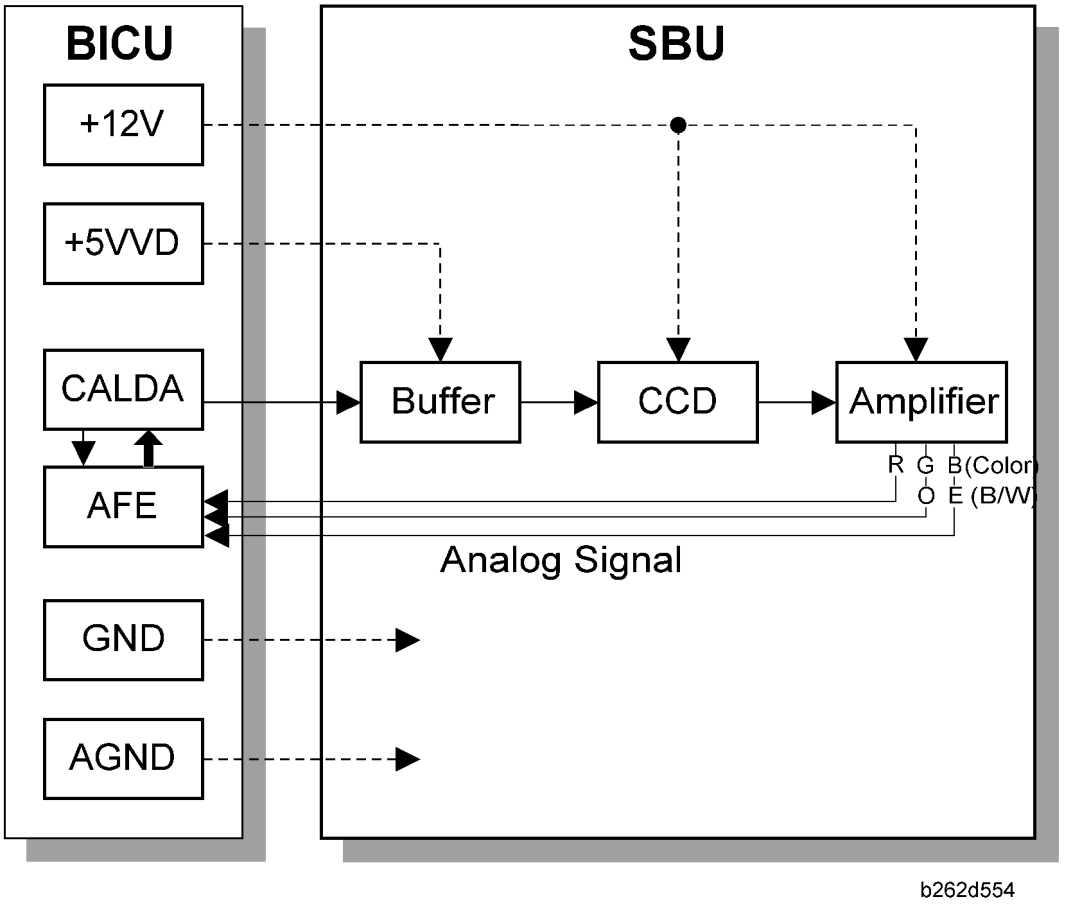

The SBU receives analog signals from the CCD and converts these into digital signals used for image processing.

Buffer

Used for driving the CCD. Includes a 3V/5V converter (converts the CALDA 3V drive signal to 5V).

CCD

Converts light reflected from the original into an electrical signal. This machine uses a color CCD. Scan density is 600 dpi. Pixel size is 7 x 7 microns. Maximum pixel rate is 10Mhz.

Amplifier

Inverts and amplifies the electrical signal from the CCD.

Copy Process

Overview

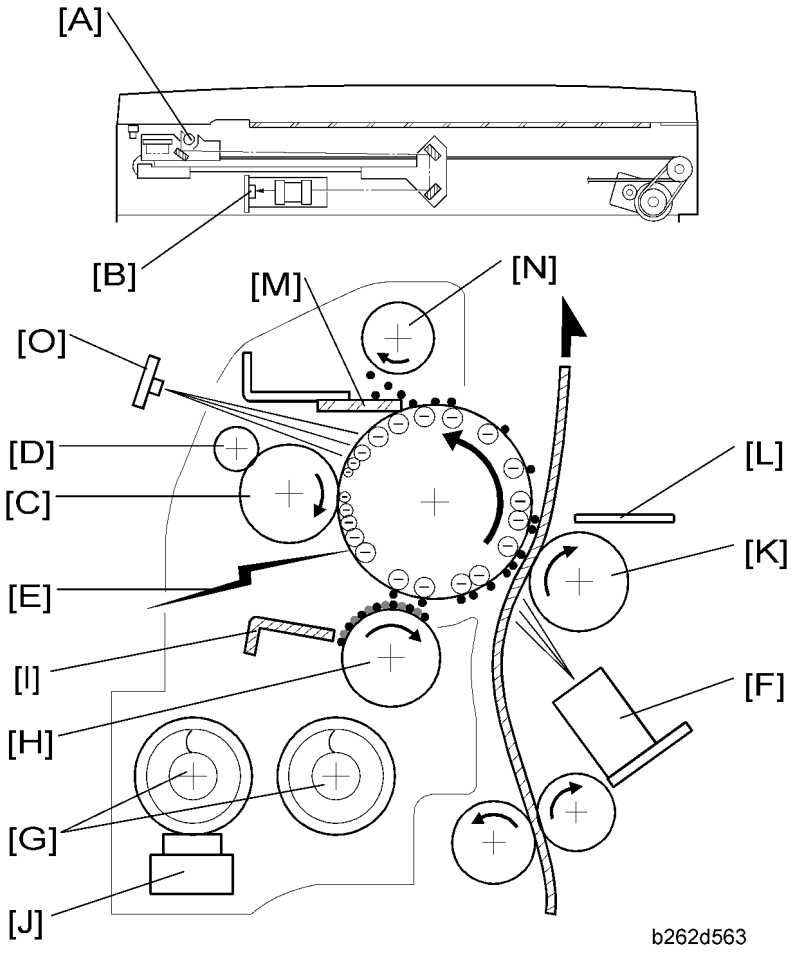

The following is a brief overview. For more detailed information about each process, refer to the Core Technology manual.

1. **Exposure**

   A xenon lamp [A] exposes the original → the CCD [B] converts reflected light to analog data signal → the BICU converts analog signal into digital data, processes it, stores it in memory the → BICU retrieves the data from memory and uses it to drive the laser. (Each original is scanned once only.)

2. **Drum Charge**

In the dark, the drum charge roller [C] imparts a negative charge to the OPC drum. (The roller is kept clean by cleaning roller [D].)

3. **Laser Exposure**

   The laser unit, controlled by the BICU, fires a beam [E] at the drum, drawing the latent electrostatic image on the drum surface. (Exposure by laser dissipates the local negative charge.)

4. **ID (Image Density) Sensor**

   The ID sensor [F] periodically measures (a) drum surface reflectivity, and (b) reflectivity of a test pattern image drawn on the drum. The BICU uses ID sensor data to adjust charge-roller voltage, and uses both ID sensor data and TD sensor [J] data to adjust the toner density.

5. **Development**

   Augers at [G] carry developer (carrier/toner mix) to the magnetic development roller [H]. The roller creates a developer "brush" that rubs against the drum, causing toner to adhere to the electrostatic image. (The doctor blade [I] restricts the height of the "brush." The TD (toner density) sensor [J] measures the ratio of toner in the developer.)

6. **Image Transfer**

   Paper moves between the drum and the transfer roller [K]. A positive charge applied to the transfer roller pulls toner off the drum and onto the paper, while also attracting the paper itself.

7. **Paper Separation**

   Paper is separated from the drum as a result of (a) electrostatic attraction of paper toward transfer roller, and (b) a high AC voltage applied to the discharge plate [L].

8. **Cleaning**

   The cleaning blade [M] scrapes remaining toner from the drum, and the toner collection coil [N] retrieves this toner.

9. **Quenching**

   Light from the quenching lamp [O] neutralizes the charge on the drum surface.

Scanning

Overview

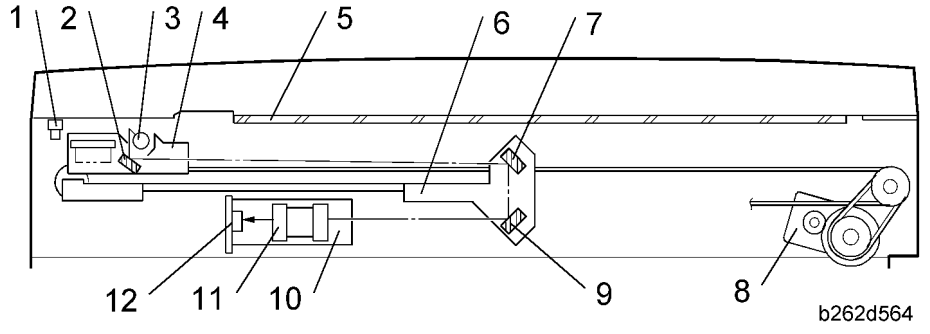

1. Scanner HP Sensor	7. 2nd Mirror
2. 1st Mirror	8. Scanner Motor
3. Exposure Lamp	9. 3rd Mirror
4. 1st Scanner	10. Lens Block
5. Exposure Glass	11. Lens
6. 2nd Scanner	12. CCD

The HP sensor [1] senses when the scanner is at home position, ready to begin a scan.

To copy: the original is illuminated by the xenon exposure lamp [2]. The 1st, 2nd, and 3rd mirrors direct the reflected light to the lens block, where the lens directs it to the CCD.

The 1st scanner includes a reflector (not shown) that helps reduce shadows on pasted originals.

Scanner Drive

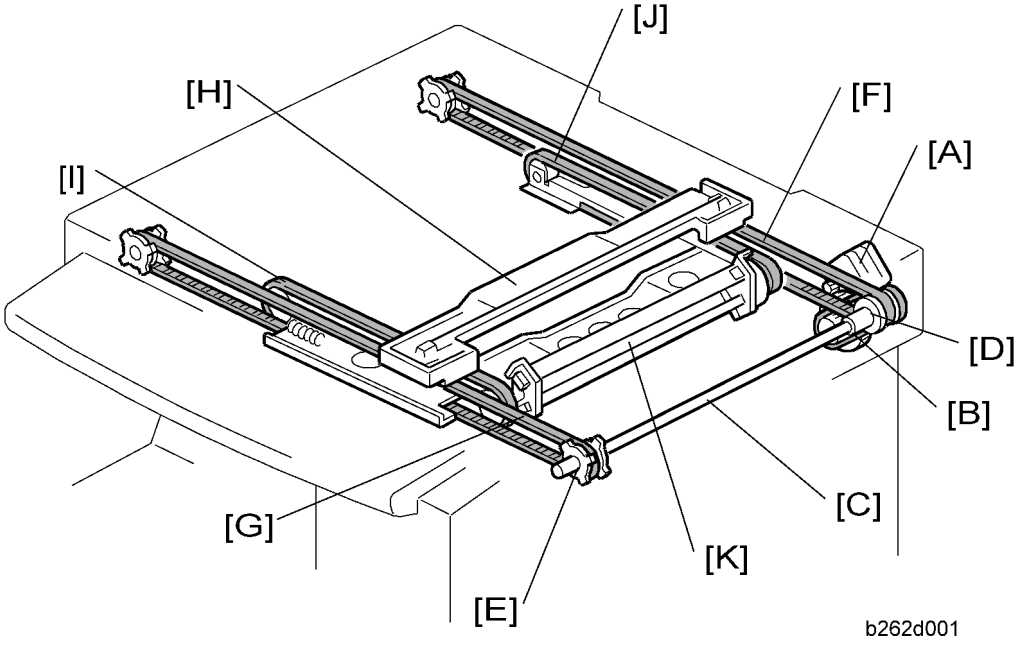

The scanner motor [A] (a stepper motor) drives a gear that turns a small drive belt [B], driving the scanner drive shaft [C]. Pulleys [D, E] on the ends of the shaft drive timing belts [F] and [G], driving the 1st scanner [H]. The first scanner is secured to timing belts [I] and [J], which drive the 2nd scanner [K] through the 2nd scanner's pulleys.

During scanning in book mode, the 2nd scanner moves at half the speed of the 1st scanner. Scanner speed increases for reduction printing, and drops for enlargement printing—generating reduction or enlargement in the sub-scan dimension. (The BICU uses image processing to generate the corresponding reduction or enlargement in the main-scan dimension.)

You can adjust magnification in the sub-scan direction using SP4-101 (which will adjust the motor speed). You can adjust in the main scan direction using SP4008.

For information about scanning in DF mode, refer to the ARDF manual.

Image Processing

Overview

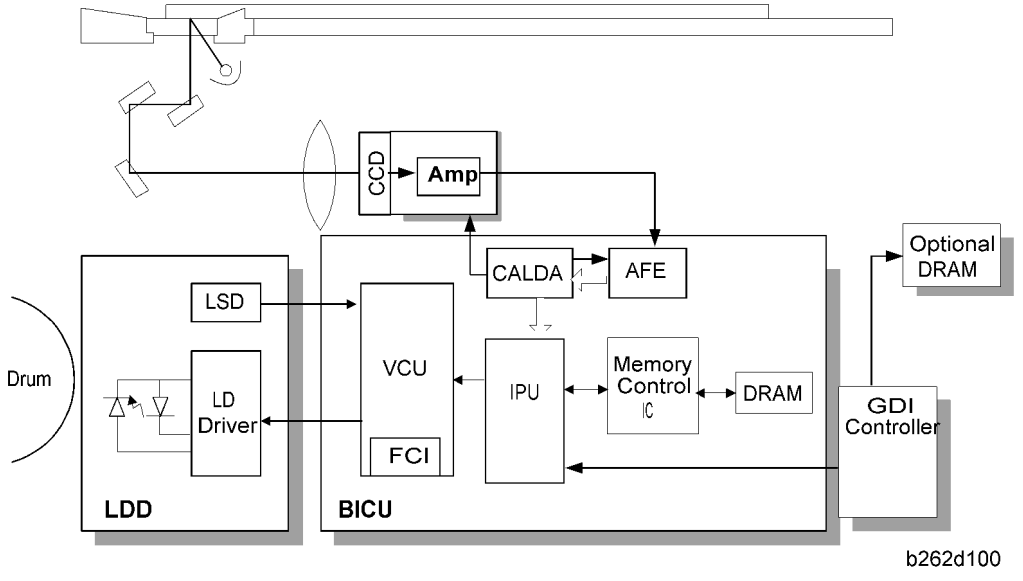

The scanned image is processed by the following modules.

In the SBU

- CCD: Converts the reflected light from the image into an analog signal. Driven by the CALDA.
- Amp: Amplifies the analog signal and sends it to the AFE on the BICU.

In the BICU

- IPU: Auto shading, filtering, magnification, scanner gamma correction, ID gamma correction
- VCU: Printer gamma correction, LD print timing control and laser power PWM control
- FCI (inside the VCU): Smoothing
- The data then moves to the LD drive board in accordance with timing controlled by the BICU.
- CALDA: CCD drive, AFE drive, Data conversion, Offset correction
- AFE: Analog digital converter, Gain adjustment, Offset adjustment (Analog Front End)

Image Processing Path

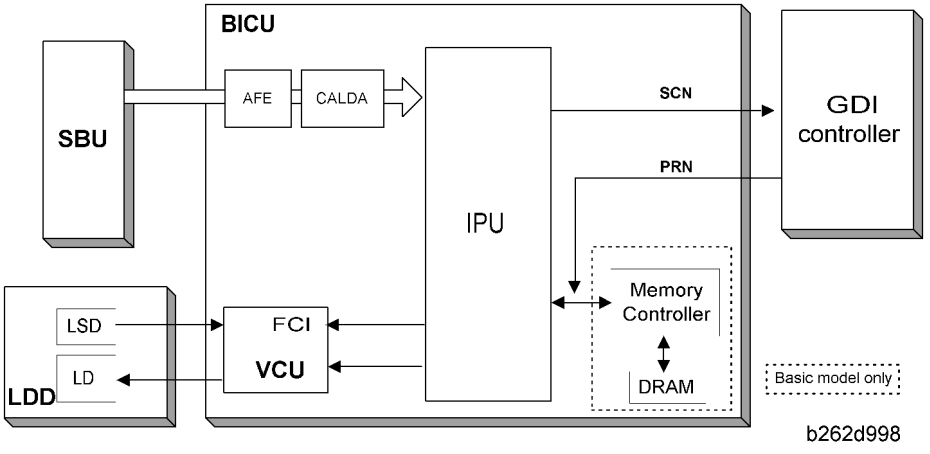

The image data from the SBU goes to the IPU (Image Processing Unit) on the BICU board, which carries out the following processes on the image data:

- Auto shading
- White/black line correction
- ADS
- Scanner gamma correction
- Magnification (main scan)
- Filtering (MTF and smoothing)
- D gamma correction
- Binary picture processing
- Error diffusion
- Dithering
- Video path control
- Test pattern generation

The image data then goes to the VCU (basic machine) or to the GDI controller (GDI machine).

Note

- The IPU and VCU are contained in the same IC (called SCRATCH) on the BICU.

Original Modes

The machine has 10 original modes. There are two text modes, three photo modes, and five "special" modes.

The original mode key on the operation panel has two settings, text and photo. With the default settings, the machine uses "Normal Text (Text 1)" when the Text indicator is lit, and uses "Photo Priority (Photo 1)" when the Photo indicator is lit.

Selection of Original Modes, for Copying

The customer can allocate different modes to the Text and Photo indicators with User Tools – Copier Features – Image Adjustment. Note that the Text indicator does not have to be allocated to a Text mode and the Photo key does not have to be allocated to a Photo mode. For example, the Text indicator can be allocated to Photo 3, and the Photo indicator can be allocated to Special 4.

If the user wishes to customize one of the original modes, the technician can change the settings using SP 4922 to SP 4942. Refer to "SP Modes for Each Image Processing Step". However, only one of the original modes can be customized at any one time.

Original Modes: Copying

Original Type	Mode	Targeted Original Type
Text	Normal	Normal text originals
	Sharp	Newspapers, originals through which the rear side is moderately visible as faint text.
Photo	Photo priority	Text/photo images which contain mainly photo areas
	Text priority	Text/photo images which contain mainly text areas
	Photographs	Actual photographs
Special	Unneeded back-ground	Originals through which the rear side is extremely visible (or have a colored background) with faint text. Also for originals with very grainy backgrounds (some newspa-pers) and faint text.
	Colored text	Originals with colored text and lines.
	Normal Pixel Photo	Photo images created by dither patterns (dots visible), such as newspaper photos – normal resolution.
	Coarse Pixel Photo	Photo images created by dither patterns (dots visible), such as newspaper photos – coarse resolution.
	Preserved Background (Normal Text)	Use instead of Normal Text if, e.g. an embedded white area causes Auto Image Density to initially remove the

		surrounding (darker) background but leave the rest. Use if the customer wishes to keep this background.

NOTE: The gray area means the setting cannot be changed using SP mode.

		Text		Photo			Special					Note
		Normal	Sharp	Photo Priority	Text Priority	Photographs	Unneeded Background	Colored Text	Normal Pixel Photo	Coarse Pixel Photo	Preserved Background	
SBU	ADS	ADS			ADS		ADS					
–												
Shading Correction	Shading Line Correction	Enabled		Enabled			Enabled					
	White Line Correction	Enabled		Enabled			Enabled					SP4-941
	Black Line Correction	Enabled (DF only)		Enabled (DF only)			Enabled (DF only)					SP4-942
	Scannerg Correction	Text (Reflection Ratio ID Linear)		Photo (Density Linear)	Text (Refrelcion Ratio ID Linear	Photo (Density Linear)	Text (Reflection Ratio ID Linear)		Photo (Density Linear)	Photo (Density Linear)	Text (Reflection Ratio ID Linear)	SP4-922
	Small Smoothing Filter	Weak	Weak	Normal	Normal	Weak	Strong	Weak			Weak	Connected with MTF filter (Edge)
–												
Magnification	Main Scan Magnification	Enabled		Enabled			Enabled					
	Mirroring	Enabled (DF only)		Enabled (DF only)			Enabled (DF only)					
	Side-to-side Registration (Left Side)	Enabled		Enabled			Enabled					
–												
Filtering	MTF Filter (Edge)	Normal	Strong	Weak (All Area)	Normal	Weak (All Area)	Strong	Normal			Normal	SP4-930
	MTF Filter (Solid)		Normal									SP4-931
	MTF Filter (Low ID)	Normal	Normal		Normal		Normal				Normal	SP4-932
	Smoothing Filter											Connected with MTF filter (Edge)
	Independent Dot Erase	Weak			Weak		Strong	Weak			Weak	SP4-928
	Line Width Correction	Disabled			Disabled		Disabled	Thick			Disabled	SP4-927
–												
Graduation	ID g Correction	Normal	Sharp	Photo Priority	Text Priority	Photographs	Sharp	Color Text	Normal Pixel Photo	Coarse Pixel Photo	Normal	SP4-923
–												
Image Correction	Graduation	Error Diffusion	Binary	Error Diffusion			Binary	Error Diffusion	Dithering (105 Lines)	Dithering (53 Lines)	Error Diffusion	SP4-926 (Error diffusion only)
–												
Path Control	Video Path Control	Enabled		Enabled			Enabled					
–												
VCU	FCI		Enabled				Enabled					
	Edge Correction	Enabled		Enabled				Enabled				
	Printerg Correction	Enabled		Enabled			Enabled					

Mode Adjustments

As a service person, you can use SPs 4-922 to 4-932 to further customize each of these original modes to meet specific user requirements. If the user is experiencing a problem with copy, however, SP-based adjustment should be the last step. Always proceed as follows:

1. First, try changing the density notch setting.

   If that doesn't resolve the problem, then...

2. Try selecting a different original mode.

   If that also doesn't resolve the problem, then...

3. Try customizing the relevant original mode with SPs.

To customize...

First use SP4-921 to select the original mode that you wish to customize. Then enter the relevant customizations using SP4-922 to SP4-932. Refer to Section 5 for general information about the adjustments you can make .

Note the following points:

- All SP settings are relative to the selected original mode. If you set the SP value to "0", the machine will use the default processing for that mode.
- If you enter an SP customization setting for an original mode that does not support that customization, the entry will have no meaning.

Laser Exposure

Overview

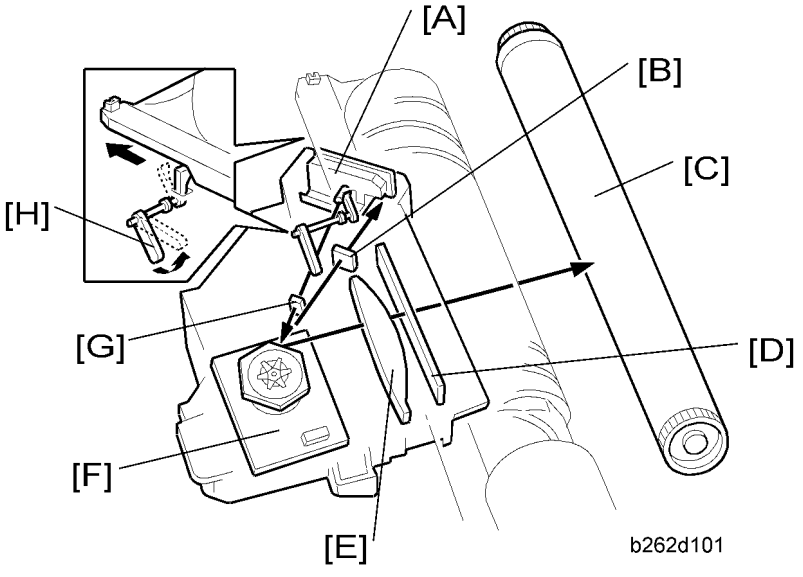

[A]: LD Unit	[E]: Toroidal Lens
[B]: Synchronization Detector Lens	[F]: Polygon Mirror Motor
[C]: OPC Drum	[G]: Cylindrical Lens
[D]: Shield Glass	[H]: LD Shutter

- The LD unit controls both the laser output and the laser synchronization mechanism.
- The machine cuts the power to the LD drive board when the front door or right door is opened.
- The LD shutter blocks the laser-beam path if the toner bottle holder or THM (toner hopper magazine) is unlatched.

LD Safety Switches

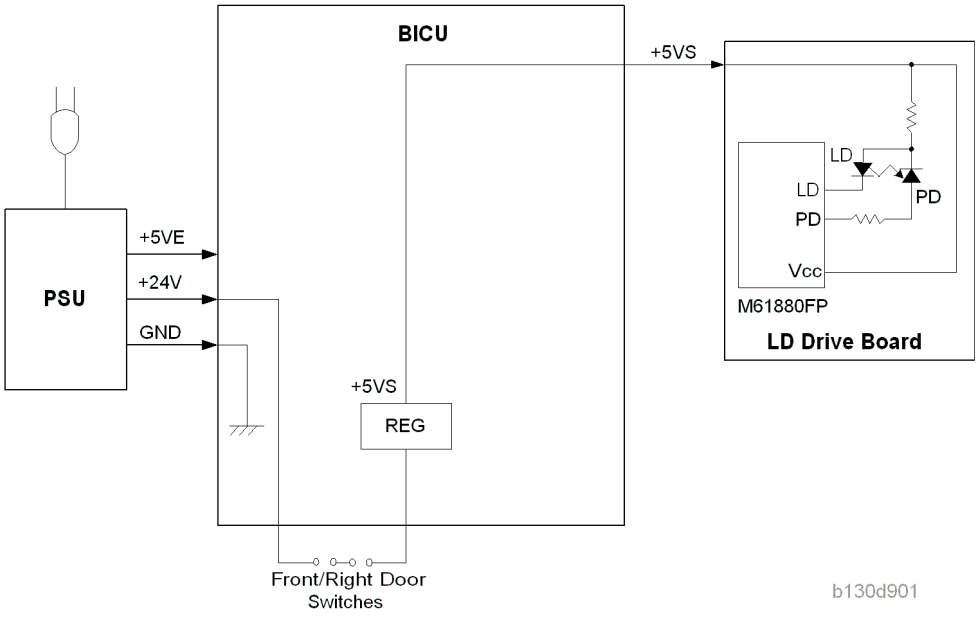

Safety switches are installed at the front and right doors to ensure technician and user safety and to prevent the laser beam from accidentally switching on during servicing. Opening of the front or right door opens the corresponding switch, cutting the power supply (+5VS) to the laser diode.

The safety switches are installed on the +24V line coming from the power supply unit (PSU). The +24V supply must pass through these switches before converting into the +5VS power that drives the laser.

Photoconductor Unit (PCU)

Overview

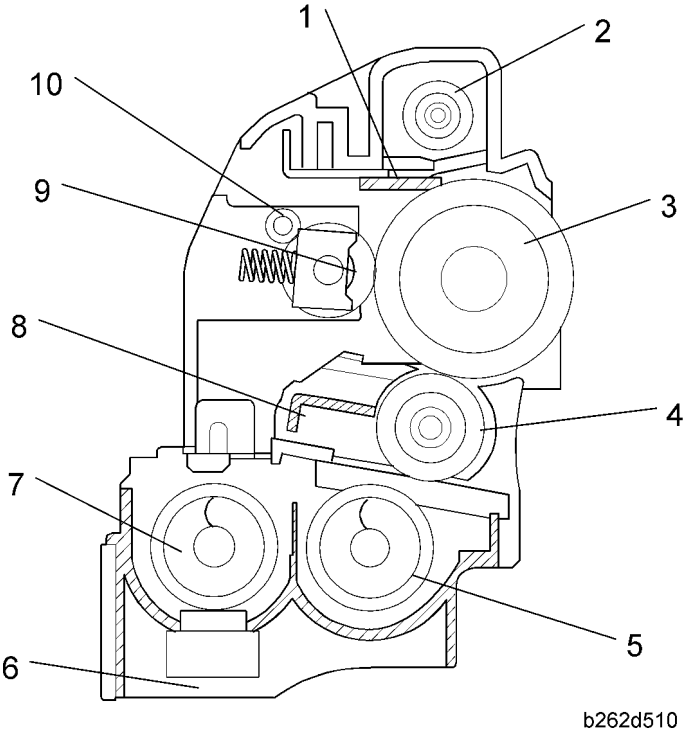

1. Cleaning Blade	6. TD (toner density) Sensor
2. Toner Collection Coil	7. Mixing Auger 1
3. OPC Drum	8. Doctor Blade
4. Development roller	9. Charge Roller
5. Mixing Auger 2	10. Cleaning Roller

DRUM Drive

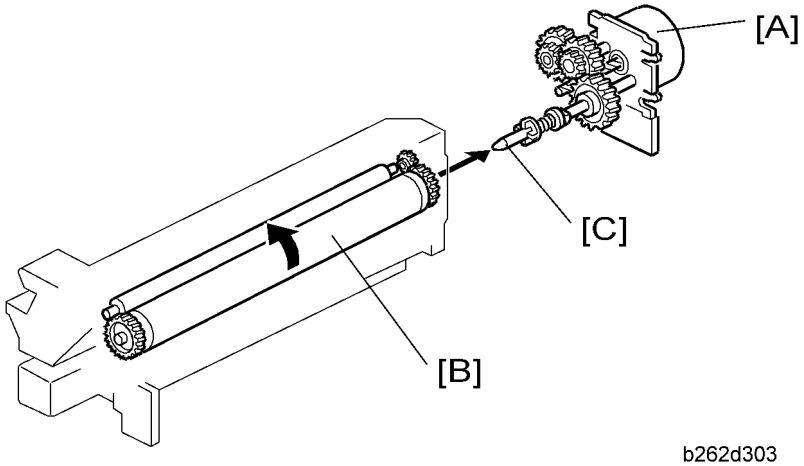

The main motor [A] drives the drum [B] through a series of gears and the drum drive shaft [C].

Drum Charge

Overview

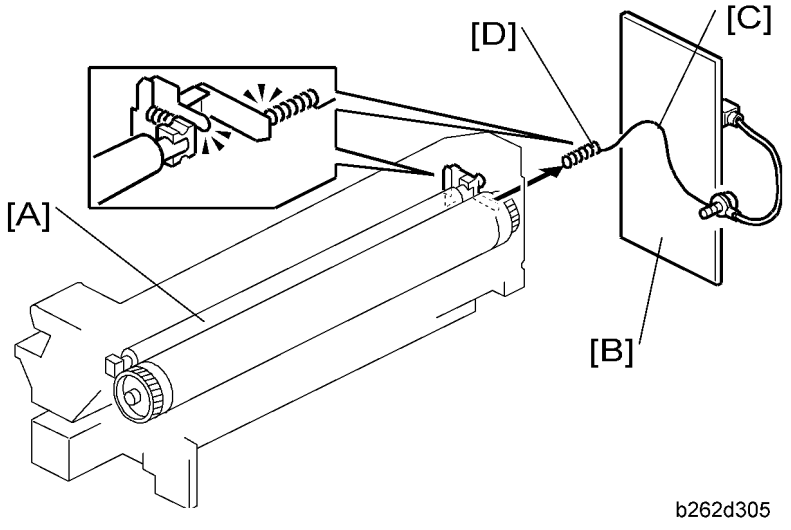

The drum charge roller [A] remains in contact with the drum, producing a charge of –900 V on the drum surface.

The high voltage supply board [B] supplies a negative charge to the charge roller via wire [C] and spring [D]. The default base (uncorrected) charge is –1650V. You can adjust this base charge using SP20011. The actual charge is corrected in accordance with the ambient environment, as described in the next section.

Charge Roller Voltage Correction

Correction for Ambient Environment

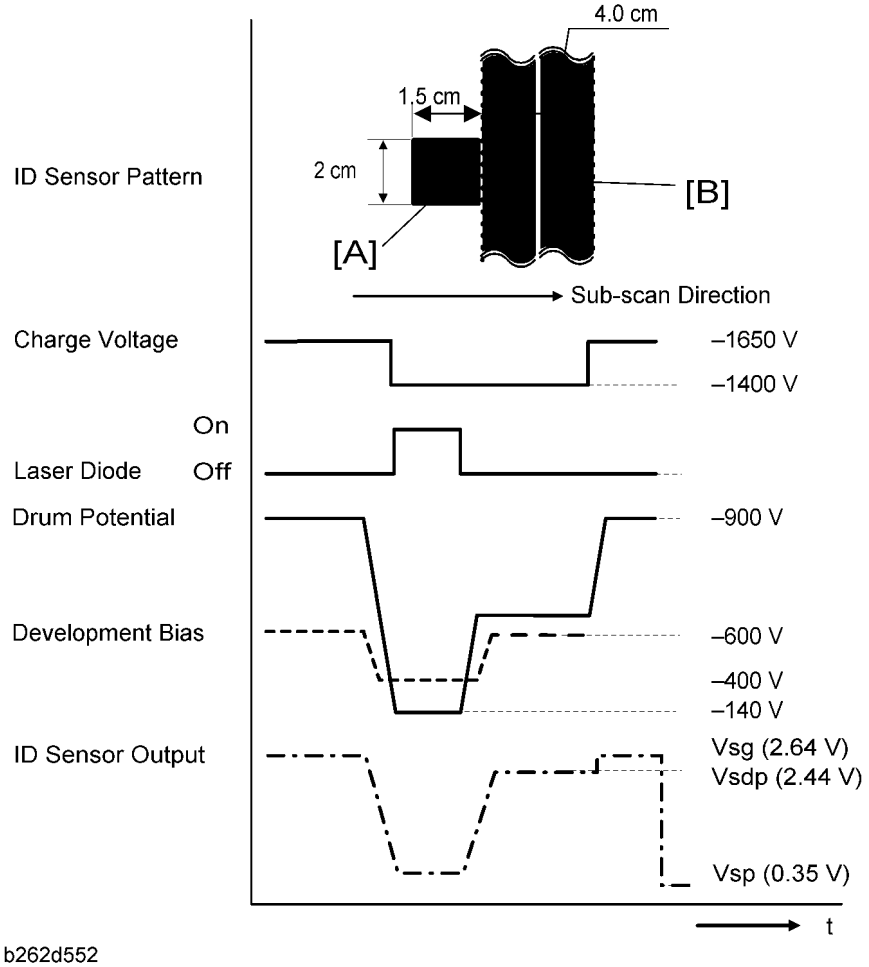

b262d552

Efficiency of voltage transfer from the charge roller to the drum decreases as ambient temperature and humidity rise. Accordingly, the charge roller voltage must be made more negative at higher temperature and humidity.

When Correction is Made

- At initial warm-up (following power-on by main switch)
- During warm-up on exit from low-power or auto-off mode, if that mode has been in effect for at least 4 hours

Note

- Correction can be disabled with SP2-927.

How Correction is Made

Immediately after creating the ID sensor pattern [A] used for toner density control (☛ "Toner Density Control"), the machine generates another pattern [B] for charge voltage correction by intensifying the development bias (☛ "Development Bias") to –600 V. The laser remains off, but a small amount of toner moves to the drum because of the slight charge difference between the drum and development roller. The ID measures the pattern's density (Vsdp) and the bare drum voltage (Vsg); the FCU compares the difference and adjusts the roller voltage accordingly.

- If Vsdp/Vsg > 0.95: Change charge roller voltage by +50 V (less negative).
- If Vsdp/Vsg < 0.90 = Change charge roller voltage by –50 V (more negative).

Note

- The current ID sensor readings can be viewed using SP2-221.

Charge Roller Cleaning

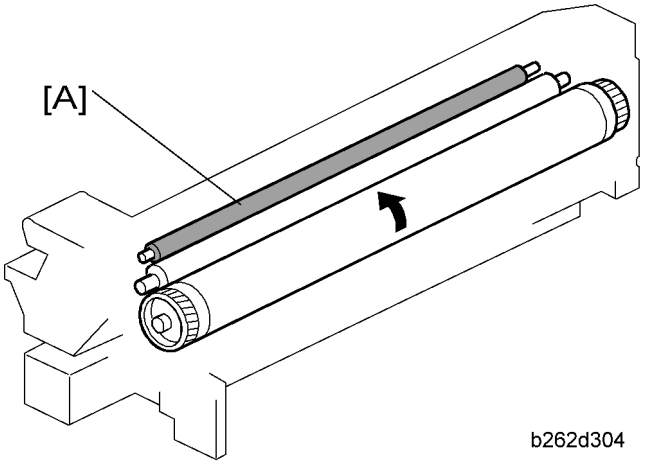

A cleaning roller [A] removes toner and debris that the roller picks up from the drum.

Detection of New PCU

Before starting to use a new PCU, the machine must (a) agitate the toner/developer mix, (b) initialize the TD sensor, and (c) initialize the PCU counter. This machine automatically detects the presence of a new PCU and carries out these operations.

At time of copier installation

The first time the machine is turned on following installation, a factory-set flag informs the machine that the PCU has not yet been initialized. The machine carries out the necessary initialization automatically.

When a replacement PCU is installed

Replacement PCUs have a special mechanism that trips when they first start, informing the machine that a new PCU has been installed. (Preinstalled PCUs do not include this mechanism, and have two empty pins in their connector.)

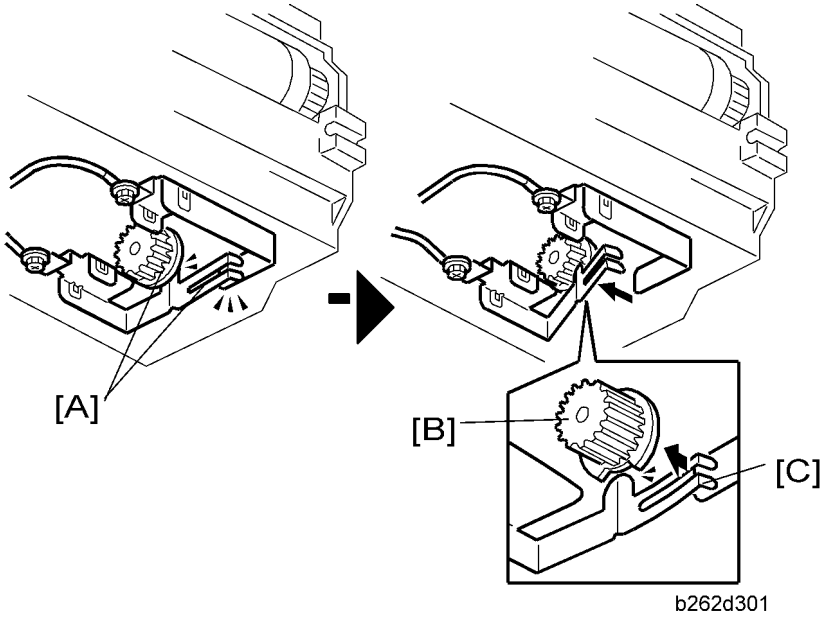

Replacement PCU ships in state [A]. Slight rotation of PCU gear [B] at power-on releases plate [C], breaking the circuit and informing the FCU that the new PCU is a replacement unit.

Development

Overview

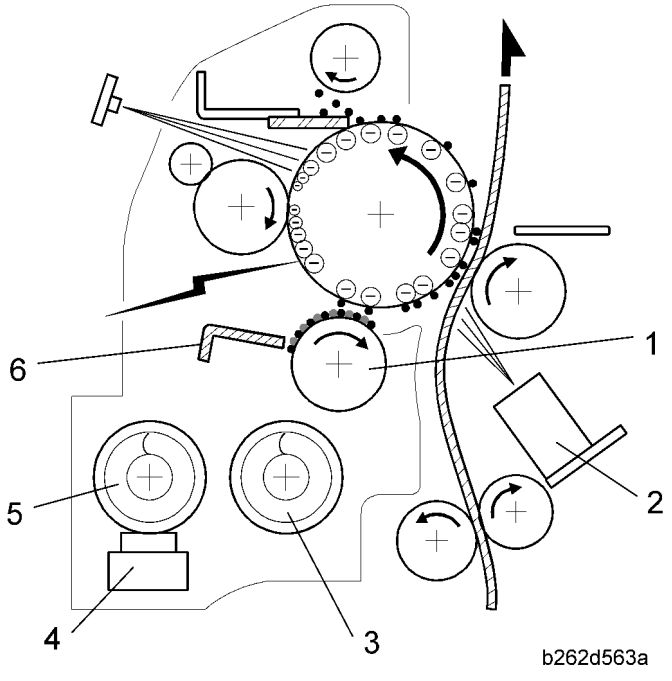

The development section consists of the following parts.

1. Development Roller	4. TD Sensor
2. ID Sensor	5. Mixing Auger 1
3. Mixing Auger 2	6. Doctor Blade

The two mixing augers mix the developer (carrier/toner mix). The TD (toner density) sensor and the ID (image density) sensor are used to control the copy image density.

Development Bias

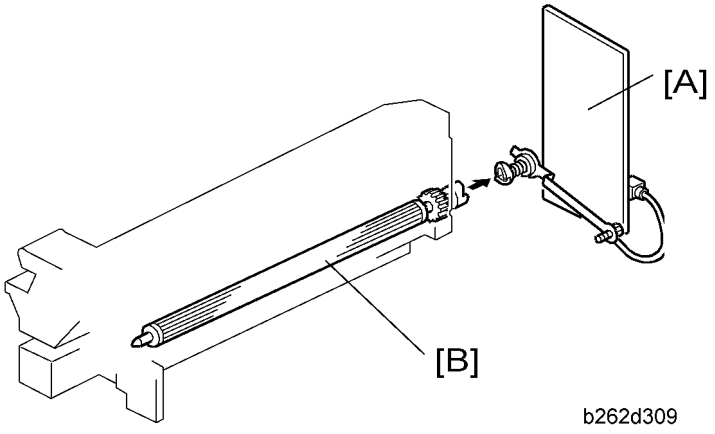

Black areas of the latent image on the drum are at low negative charge (about –140 ± 50 V), with white areas at high negative charge (about –900 V).

To attract negatively charged toner to black areas, the high voltage supply board [A] applies a (default) bias of –600 V to the development roller [B]. The bias voltage can be adjusted with SP2-201-1.

Toner Supply

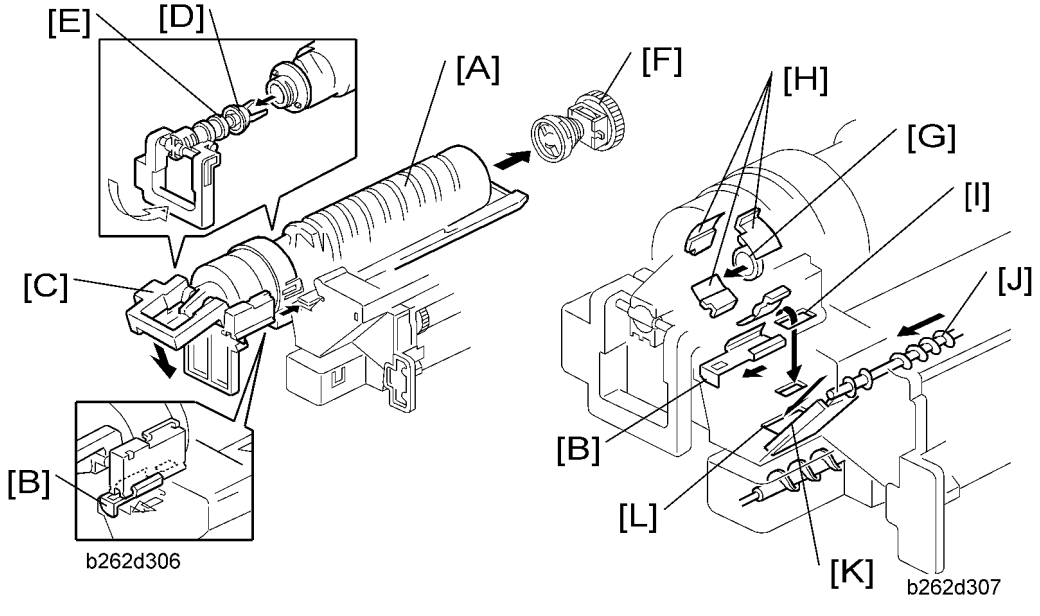

When toner bottle [A] is pushed in, shutter [B] is pushed open by the PCU body. Pressing in lever [C] pulls off toner bottle cap [D], which is held by chuck [E]. When clutch [F] turns the bottle, the spiral grooves push toner out at [G], and the turning Mylar blades [H] push this toner through slit [I] into the developing unit. Toner collection coil [J] simultaneously recycles toner retrieved from the OPC drum. The recycled toner slides down chute [K] and enters the developing unit through slit [L].

Toner density control

Overview

Toner concentration in the developer is controlled using the following values:

Vts:	TD sensor initial setting (1.25V). (Used as reference voltage when Vref is not available.)
Vref:	Toner supply reference voltage (calculated value; periodically updated)
Vt:	Actual output from TD sensor
Vsg/Vsp:	Values from ID sensor, where Vsp is the voltage of a test pattern (the "ID sensor pattern"), and Vsg is the voltage of the bare drum

Toner is added to the development unit if Vt is higher than the reference voltage.

Reference Voltage

Vts is used as the reference if the PCU has just been installed (since Vref has not yet been calculated) or if ID sensor correction has been disabled with SP2-927. In all other cases, Vref is used as the reference.

Toner Density Sensor Initial Setting

The Vts for this machine is 1.25 V. During TD sensor initialization (after installation of new PCU), the machine adjusts the sensor so that it reads out 1.25V.

Toner Concentration Measurement

The machines checks concentration every copy cycle, by comparing Vt against the reference voltage.

Vsp/Vsg Detection

An ID sensor pattern is made on the drum by the charge roller and laser diode. The ID sensor detects the pattern density (Vsp) and the density of the bare drum (Vsg).

Detection is carried out at the same time as (and immediately before) charge-roller voltage detection (☛ "Charge Roller Voltage Correction").

Note

- Use of ID sensor control can be disabled with SP2-927.

Calculation of Vref

Vref is calculated based on:

- ID sensor output (Vsp/Vsg)
- Existing reference voltage (Vref or Vts) – Vt

Toner Supply Determination

The machine supplies toner if Vt exceeds the reference voltage.

Note

- Current Vt and reference voltage values can be viewed using SP2-220. Other ID sensor values can be viewed using SP2-221.

Toner Clutch ON Time

Calculation is based on:

- Vt
- Reference voltage RV (= Vref or Vts)
- S (TD sensor's sensitivity coefficient)

Level	Decision	Motor On Time (seconds)
1	$RV < Vt \leq RV + S/16$	t
2	$RV + S/16 < Vt \leq RV + S/8$	1.5t
3	$RV + S/8 < Vt \leq RV + S/4$	2t
4	$RV + S/4 < Vt \leq RV + S/2$	3t
5	$RV + S/2 < Vt \leq RV + 4S/5$	4t
6	$RV + S > Vt \geq RV + 4S/5$	5t
7	$Vt \geq RV + S$	6t

Note

- The default value for t is 0.6. The value can be changed using SP2-922.

Toner Supply If Sensor Reading is abnormal

ID Sensor

Any of the following is considered abnormal:

- Vsg ≤ 1.65 (when Vsg is read)

- Vsg < 2.31 (at maximum power)
- Vsp ≥ 1.65
- Vt ≥ 2.64 or Vt < 0.20

Current readings can be viewed using SP2-221.

TD Sensor

The reading is considered abnormal if TD < 0.20 V or TD > 2.64 V. Abnormal readings 10 times in succession will generate SC 390. The current reading can be viewed using SP2-220.

Detection of Toner Near End and Toner End

Toner Near End detected when either of the following occurs...

- Vt is at level 6 (see above table) five times in succession
- Vt > 1.85 five times in succession

Toner End detected when any of the following occurs....

- (Vt is ≥ level 6 and Vt > 1.85) "n" time in succession, where "n" is 50 by default but can be changed to 20 using SP2-213. (Note that "n" corresponds to the number of sheets that can be printed before Toner Near End changes to Toner End.)
- Vt is at level 7 three times in succession.
- Vt > 2.00 three times in succession

Drum Cleaning and Toner Recycling

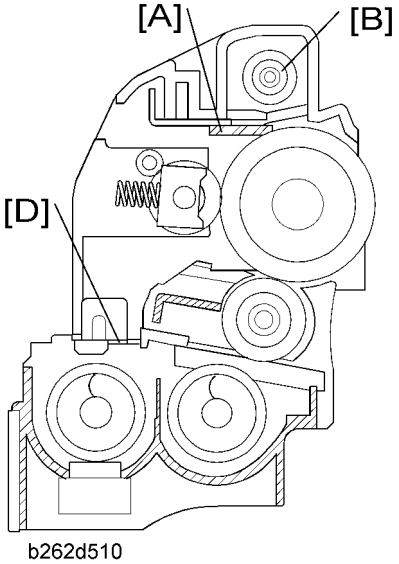

b262d510

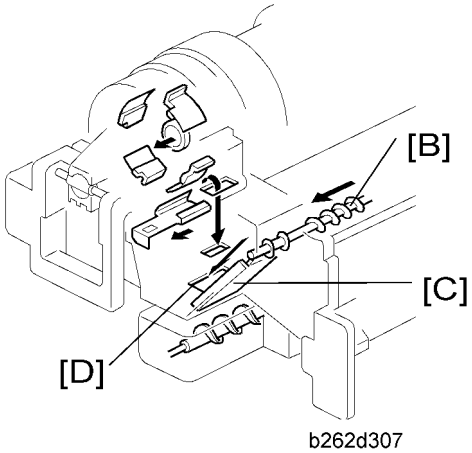

b262d307

- Cleaning blade [A] scrapes remaining toner from the drum after image transfer. Toner piles up on the blade.
- Toner collect coil [B] transports toner from pile and drops it onto chute [C], where it slides down into the development unit through a slit located at [D].
- At the end of each copy job, the drum turns about 3 mm in reverse to help clear toner and other debris from the edge of the cleaner blade.

Paper Feed

Overview

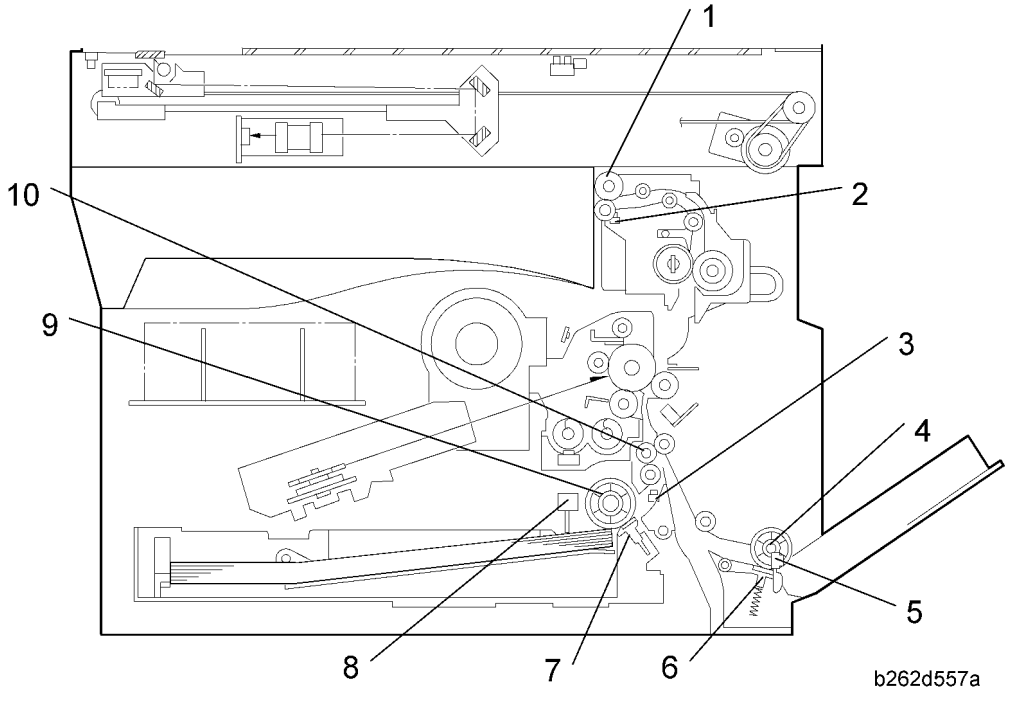

1. Exit Roller	6. Bypass Friction Pad
2. Exit Sensor	7. (Main) Friction Pad
3. Registration Sensor	8. (Main) Paper End Sensor
4. Bypass Feed Roller	9. Paper Feed Roller
5. Bypass Paper End Sensor	10. Registration Roller

Paper Feed Drive Mechanism

From Paper Tray

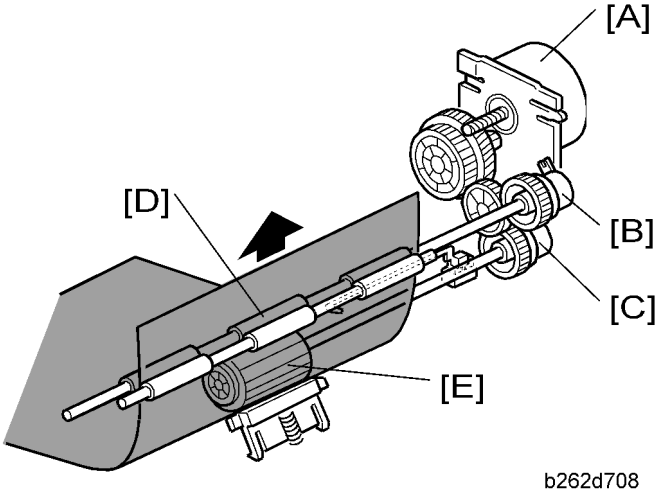

Main motor [A] drives gears on the registration clutch [B] and the paper feed clutch [C]. These clutches transfer drive to the registration roller [D] and paper feed roller [E]. The BICU controls clutch timing based on input from the registration sensor.

From 100-Sheet Bypass Tray

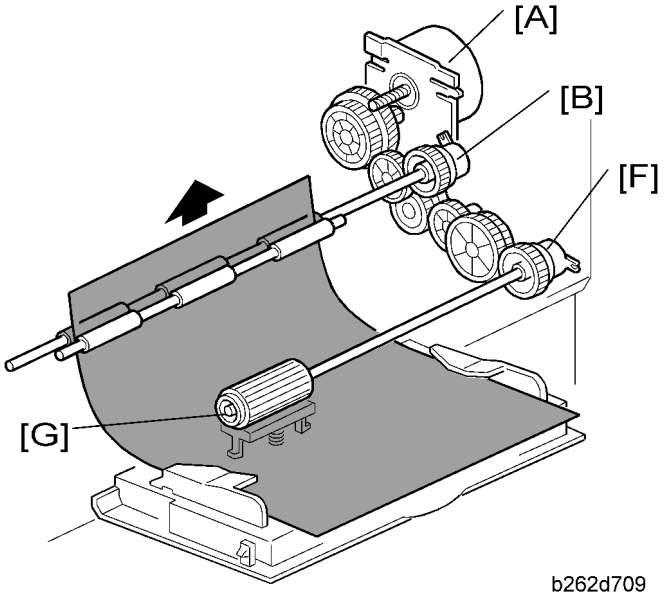

Main motor [A] drives gear on registration clutch [B] and bypass feed clutch [F]. The bypass feed clutch drives the bypass feed roller [G]. Again, the BICU controls clutch timing based on input from the registration sensor.

From 1-Sheet Bypass Tray

The user inserts the sheet directly up to the registration roller [D]. Main motor [A] drives the gear on registration clutch [B], causing the registration roller to turn and feed the sheet.

Paper Feed and Separation

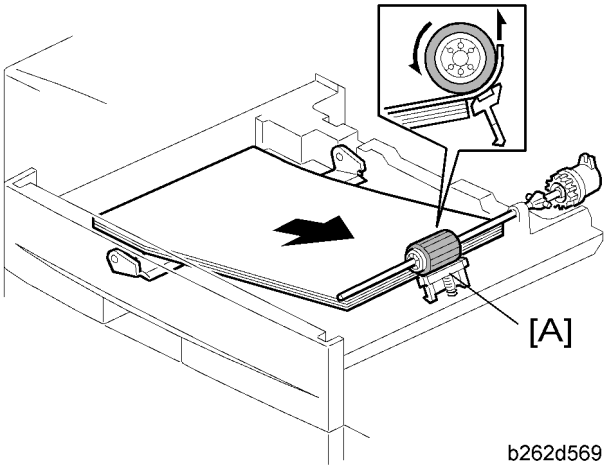

The machine uses a friction-pad feed system.

Friction pad (in paper tray)

Paper Lift Mechanism

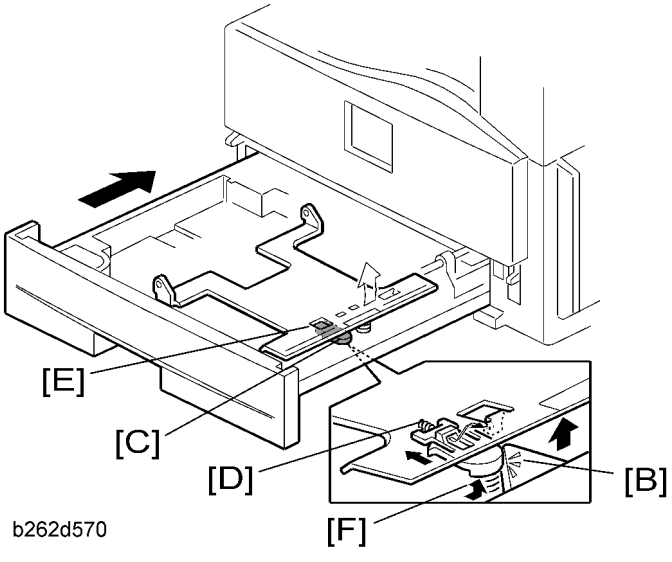

When tray is pushed in: Projection [B] on frame pushes rounded slider [C] in against spring [D], retracting the latch [E]. Spring [F] pushes the plate up.

Paper End Detection

Main Tray

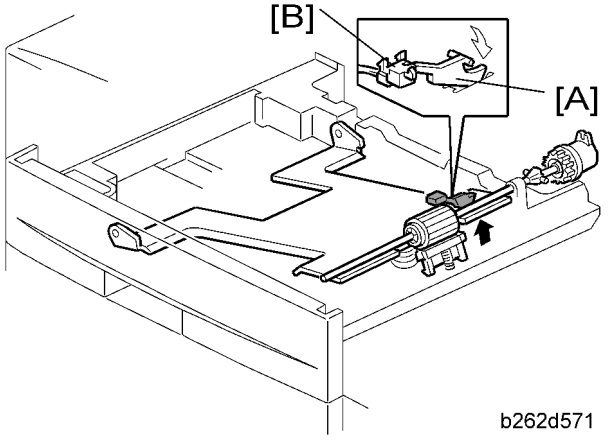

When paper runs out, feeler [A] drops into cutout, activating paper end sensor [B].

100-Sheet Bypass Tray

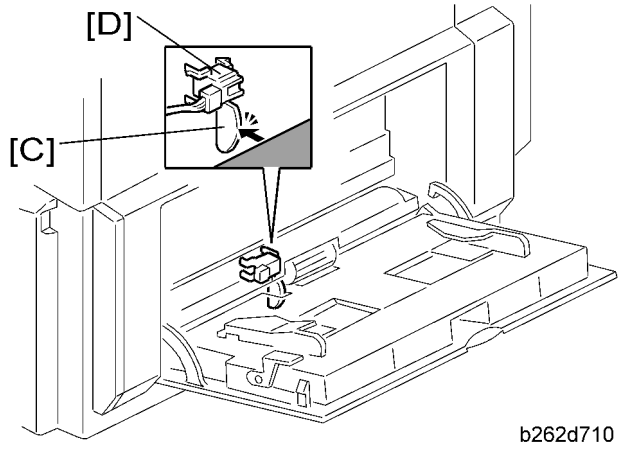

When paper runs out, feeler [C] drops into cutout, activating the bypass paper end sensor [D].

Paper Registration

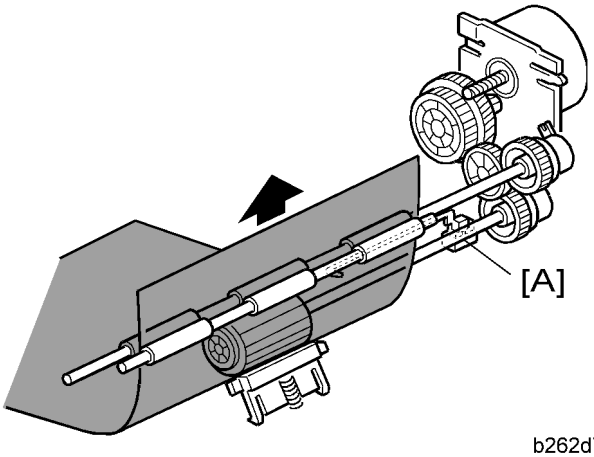

b262d708a

The BICU uses input from registration sensor [A] to control clutch timing and detect misfeeds. Registration clutch timing is controlled to eliminate skew (by stopping the paper briefly as it reaches the roller, so that it buckles). The amount of buckle can be adjusted with SP1-003.

Image Transfer and Paper Separation

Overview

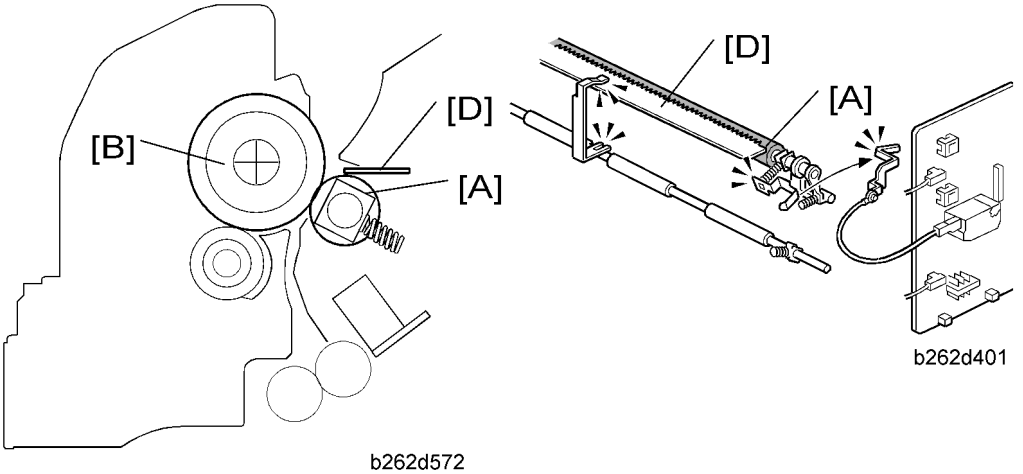

b262d401

b262d572

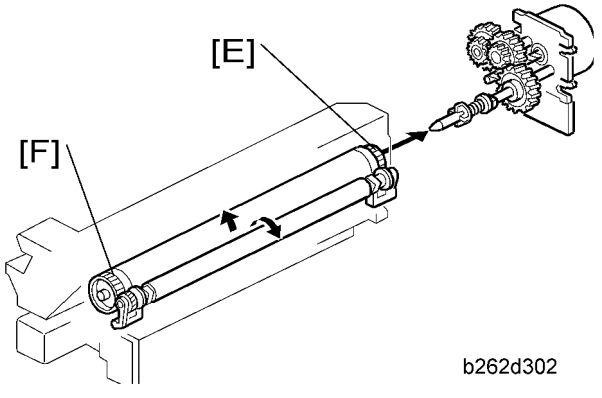

b262d302

The transfer roller [A] is pressed against the OPC drum [B]. The high-voltage power supply board [C] supplies a positive current to the transfer roller, attracting the toner from the drum onto the paper. The current is set in accordance with the paper's type, size, and feed tray.

Separation of the paper from the drum is aided by the drum's own curvature and by a high AC voltage applied to the discharge plate [D].

The drum drives the transfer roller directly by gears [E], [F].

Image Transfer Current Timing

There are two transfer current levels: low and high.

1. Low level: Before image transfer starts, the high voltage supply board supplies +10µA to the transfer roller. This prevents the transfer roller from attracting any positively charged toner on the drum surface.
2. High level: During image transfer, the high voltage supply board supplies a high level current (see the table) to the transfer roller. This enables the transfer roller to attract toner onto the paper.

When the trailing edge of the paper has passed the transfer roller, the high voltage supply board stops supplying the transfer current. If the copier is printing more pages, the high voltage supply board supplies the low level current.

You can adjust these levels (☛ SP2-301). When increasing a transfer current level, use caution:

- Increasing a transfer current level may produce ghost images–some part of image near the leading edge reappears in other part of the page.
- Increasing a transfer current level might damage the OPC drum.

The table lists the default settings and SPs.

Job type	Amp	SP
Normal paper	0 µA	SP2-301-001
Thick paper	0 µA	SP2-301-002
Duplex copying	0 µA	SP2-301-003

Transfer Roller Cleaning

Toner may transfer to the roller surface following a paper jam or if the paper is smaller than the image. Periodic cleaning of the roller is required to prevent this toner from migrating back to the rear of new printouts.

The machine cleans the roller at the following times:

- After initial power on.
- After clearing of a copy jam
- At the end of a job, if at least 10 sheet have been printed since the last cleaning

The high voltage supply unit first supplies a negative cleaning current (about –4 µA) to the transfer roller, causing negatively charged toner on the roller to move back to the drum. It then applies a positive cleaning current (+5 µA) to the roller, causing any positively charged toner to migrate back to the drum.

The cleaning current can be adjusted using SP2-301-4.

Image Fusing and Paper Exit

Overview

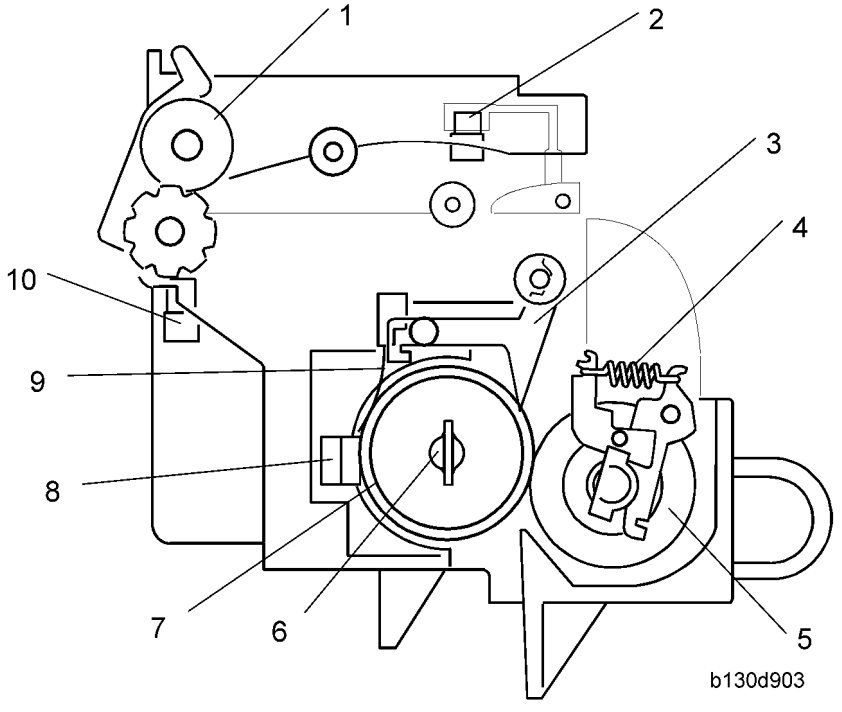

1. Exit Roller
2. Paper Path Sensor
3. Hot Roller Strippers
4. Pressure Spring
5. Pressure Roller
6. Fusing Lamp
7. Hot Roller
8. Thermoswitch
9. Thermistor
10. Exit Sensor

Hot Roller Drive

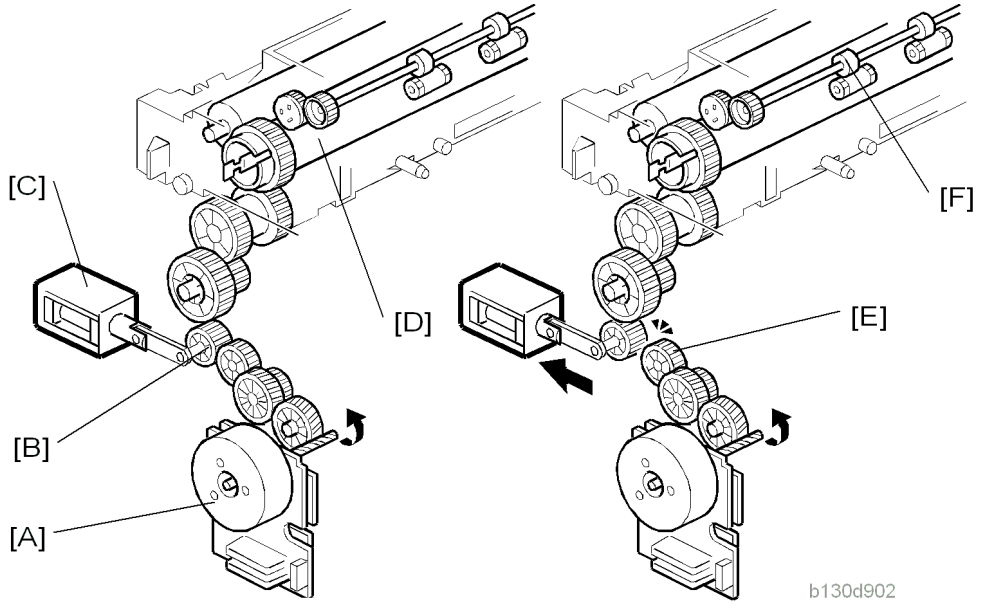

Left: Contact-release solenoid off
Right: Contact-release solenoid on

Mechanism

The main motor [A] drives the hot roller [D] through a gear train. One of the gears in the gear train is the contact-release gear [B]. This gear is linked to the contact-release solenoid [C]. When the contact-release solenoid is on, it separates the contact-release gear from another gear [E] in the gear train. As a result, the drive power of the main motor is not transmitted to the hot roller.

The drive power of the main motor is not transmitted to the paper exit roller [F]. This roller is driven by the duplex motor.

Contact/Release Control

The contact-release solenoid turns on when the following conditions are all met:

- The copier is warming up the hot roller.
- The hot roller temperature is 16°C or higher.
- The fusing idling (SP1-103-001) is "No."

This control is based on the following facts:

- The copier takes a shorter time to heat the hot roller when the roller is not turning.
- The temperature of the hot roller surface may become uneven when the hot roller temperature is low and the roller is not turning.

Pressure Roller

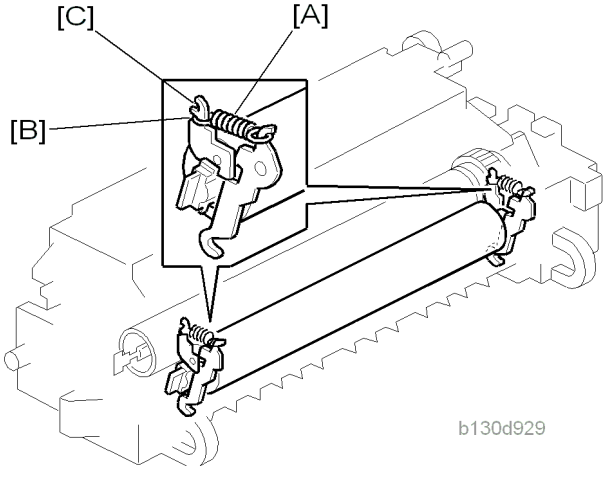

The pressure springs [A] constantly press the pressure roller against the hot roller. As the default, the springs are positioned at the lower notch [B]. If necessary, pressure can be decreased by changing the springs to the upper notch [C].

Pressure Release

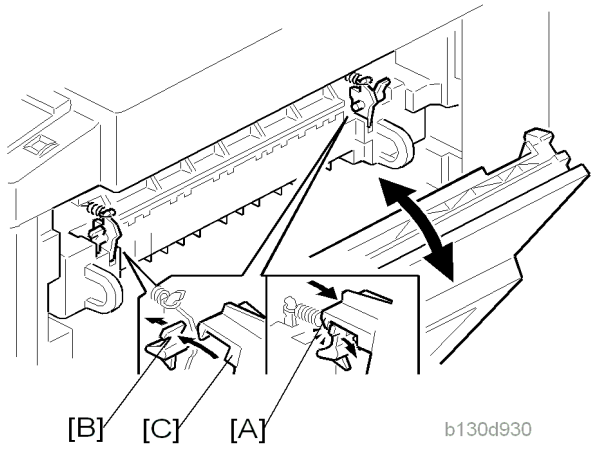

When the right door is opened, part [A] (on each side) pulls open catch [B] (on each side), releasing pressure on the pressure roller, so that it can turn freely to allow removal of jams. When the right door is closed, part [C] pushes catch [B] closed, restoring normal pressure.

Separation

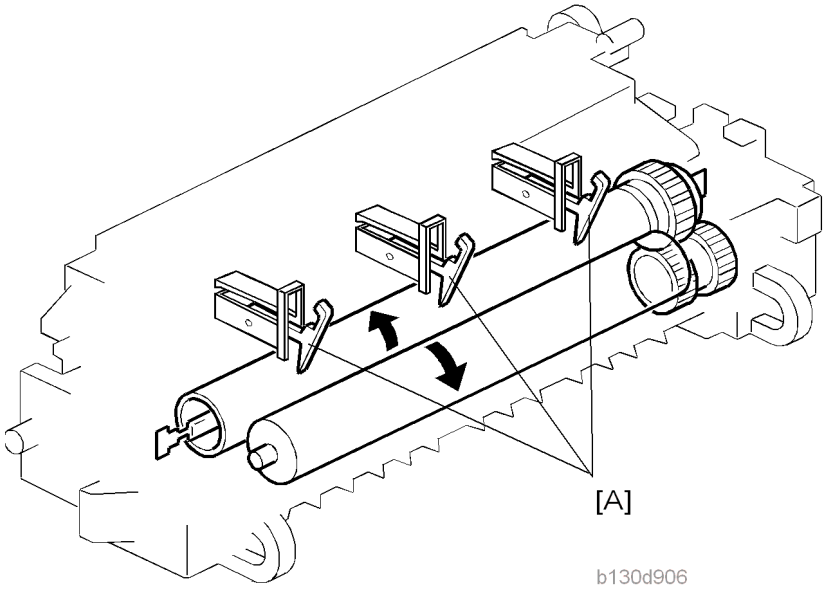

The hot roller stripper pawls [A] prevent paper from sticking to the hot roller.

Fusing Temperature Control

Control Process

The BICU references the signal from the thermistor every second. The BICU turns the fusing lamp on and off based on the current temperature and the "target temperature".

Target Temperature

The table lists the target temperatures. You can change these targets by the listed programs.

For the fusing temperature transition during copying, see (below).

Status/Condition	Temperature	SP

Warming up	160°C	SP1-105-001
Ready	150°C	SP1-105-003
Copying	160°C	SP1-105-005
Low level	60°C	SP1-105-007
Thick paper	165°C	SP1-105-009

Temperature Transition

When the fusing unit is cool, the fusing temperature should be higher to ameliorate the fusing quality. During copying, the fusing temperature is controlled in four phases as listed in the table. "Default" is the target fusing temperature of SP1-105-005 (160°C). "Example" is the target fusing temperature of the case where you specify "165°C" in SP1-105-005.

	Start key pushed (①)	For one second (②)	30 seconds later (③)	60 seconds later (④)
Default	175°C	170°C	165°C	160°C
Example	180°C	175°C	170°C	165°C
Difference from SP1-105-005	+15°C	+10°C	+5°C	—

Copy SP1-105-005 adjusts the fusing temperature of the fourth phase (④). You cannot directly adjust the fusing temperature in the first three phases (① through ③). They are always higher than the fourth phase (④) by 15°C, 10°C, and 5°C respectively.

Overheat Protection

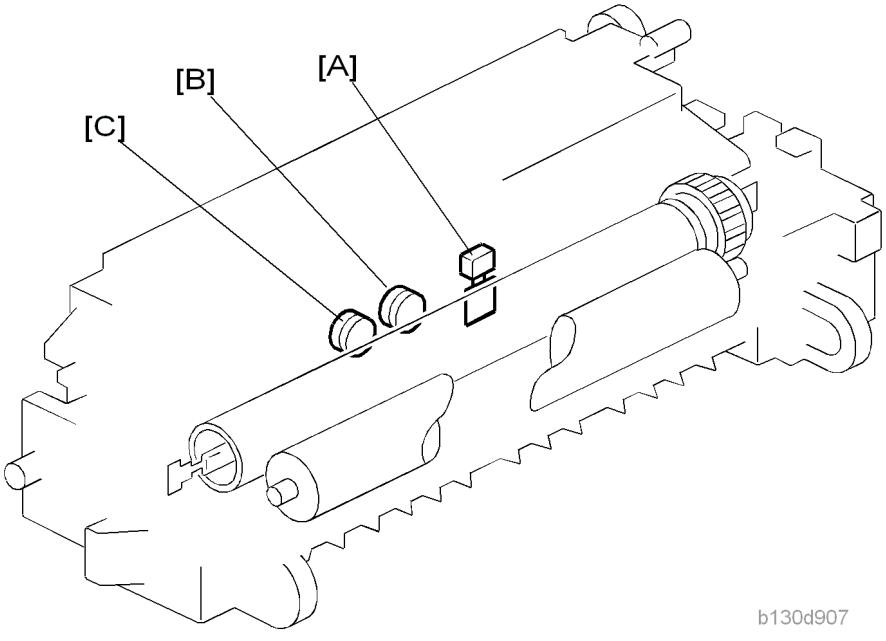

The BICU references the fusing temperature through the thermistor [A]. The copier prevents overheating as listed below. Normally, Feature 1 is effective in preventing overheating. Features 2 through 3 are fail-safe features.

Feature 1:

The BICU turns off the fusing lamp when the fusing temperature is too high.

Feature 2:

The BICU disables the machine operation when the thermistor detects an abnormal temperature transition. In a case like this, the copier displays one of these codes: SC543, SC544, SC545, or SC546.

If the fusing temperature is too low, SC542 is displayed.

Feature 3:

The BICU disables the machine operation when the thermistor does not normally work. In a case like this, the copier displays SC541.

Feature 4:

The thermoswitch near the center [B] cuts power to the fusing lamp at 160°C; the thermoswitch near the end [C] cuts power to the fusing lamp at 170°C. These thermoswitches and the fusing lamp are on the same circuit.

Note

- Thermoswitch temperature is somewhat lower than the fusing temperature.

- The thermoswitch near the center does not necessarily work earlier than the other thermoswitch. The ends of the hot roller can be much hotter than the center when, for example, paper of a small size is continuously going through the fusing unit.

Feature 5:

The BICU disables machine operation when the exhaust fan is not functioning normally. In a case like this, the copier displays SC590. Note that defective exhaust fans may cause overheating.

Duplex Unit

Important Components

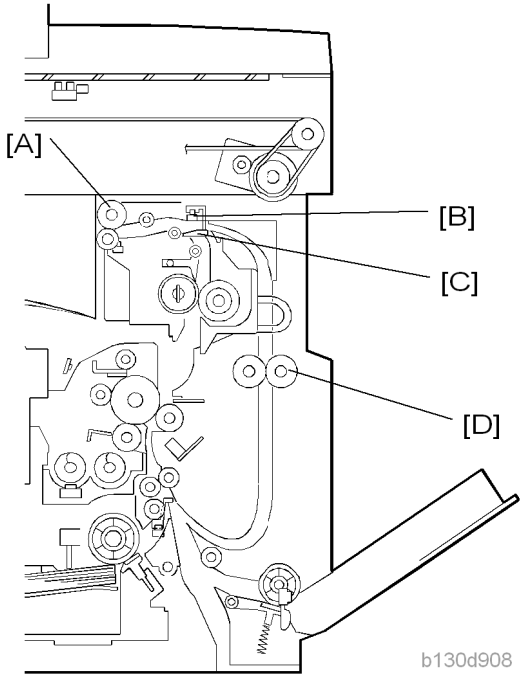

The following components play important roles in duplex printing:

- The duplex motor drives the exit roller [A] and duplex roller [D].
- One of the paper guides on the fusing unit [C] is linked to the paper path sensor [B].

The bypass tray cannot be used for duplex printing.

Duplex Printing Process

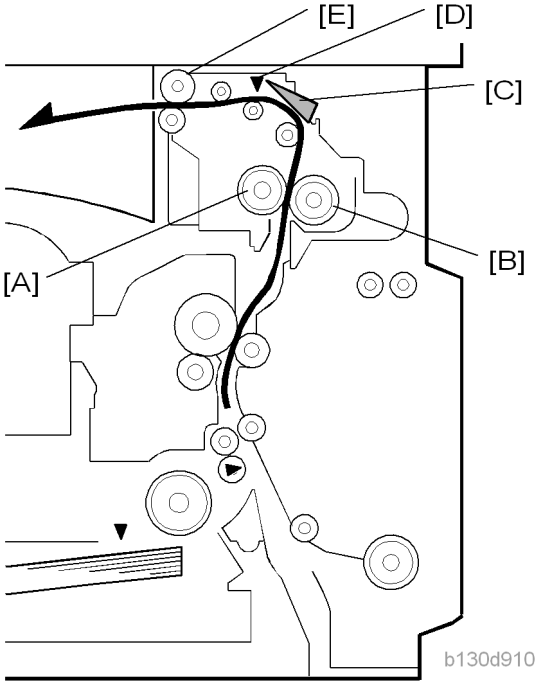

The main steps of the duplex printing process are as follows:

1. The controller starts to operate the main motor and duplex motor.
2. The hot roller [A] and pressure roller [B] transport the paper to the paper guide [C].
3. The leading edge of the paper pushes the paper guide; the paper guide turns the paper path sensor [D] on.
4. When the leading edge of the paper reaches the exit roller [E], the exit roller transports the paper.

5. When the trailing edge of the paper exits from the paper guide, the paper guide drops to the original position [F] and turns the paper path sensor [G] off.
6. The controller starts to operate the duplex motor in reverse; the exit roller [H] turns in reverse, transporting the paper to the duplex roller.
7. The paper goes over the paper guide and reaches the duplex roller [I].
8. The duplex roller transports the paper into the duplex unit. The paper goes through the unit.

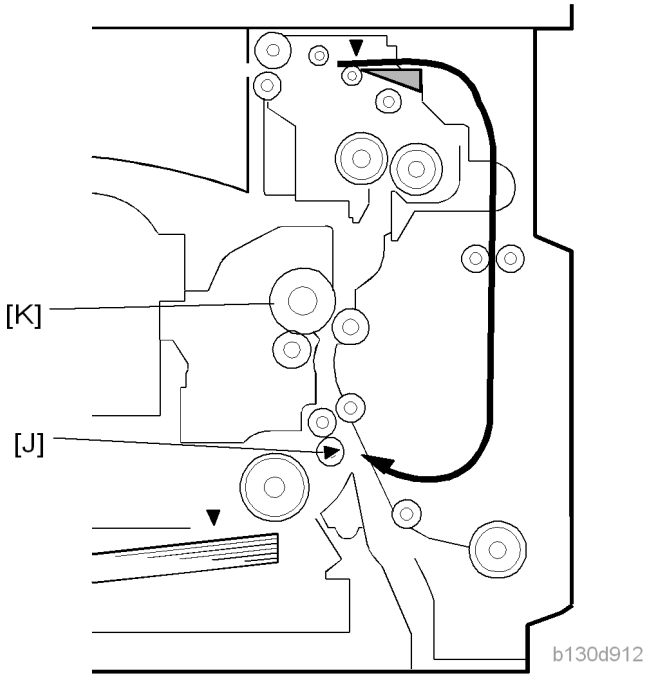

9. When the leading edge of the paper reaches the registration sensor [J], the controller stops the duplex motor. The duplex roller holds the paper in the duplex unit.
10. When the OPC drum [K] gets ready for printing, the controller restarts the duplex motor. The duplex roller transports the paper.
11. The duplex roller keeps transporting the paper until the paper reaches the fusing unit.
12. The hot and pressure rollers transport the paper to the paper guide.

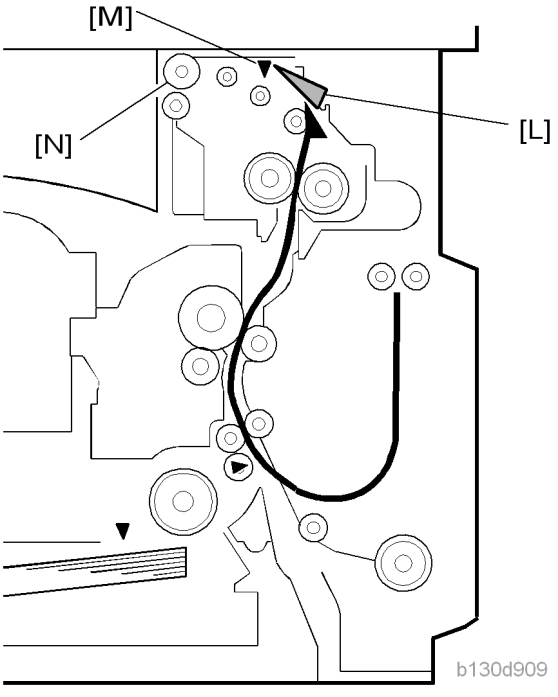

13. The leading edge of the paper pushes the paper guide [L]; the paper guide turns the paper path sensor [M] on.
14. The controller changes the direction of the duplex motor. The exit roller [N] changes the direction of its rotation, transporting the paper to the copy tray.

Energy Saver Modes

This section explains the energy saver modes.

Overview

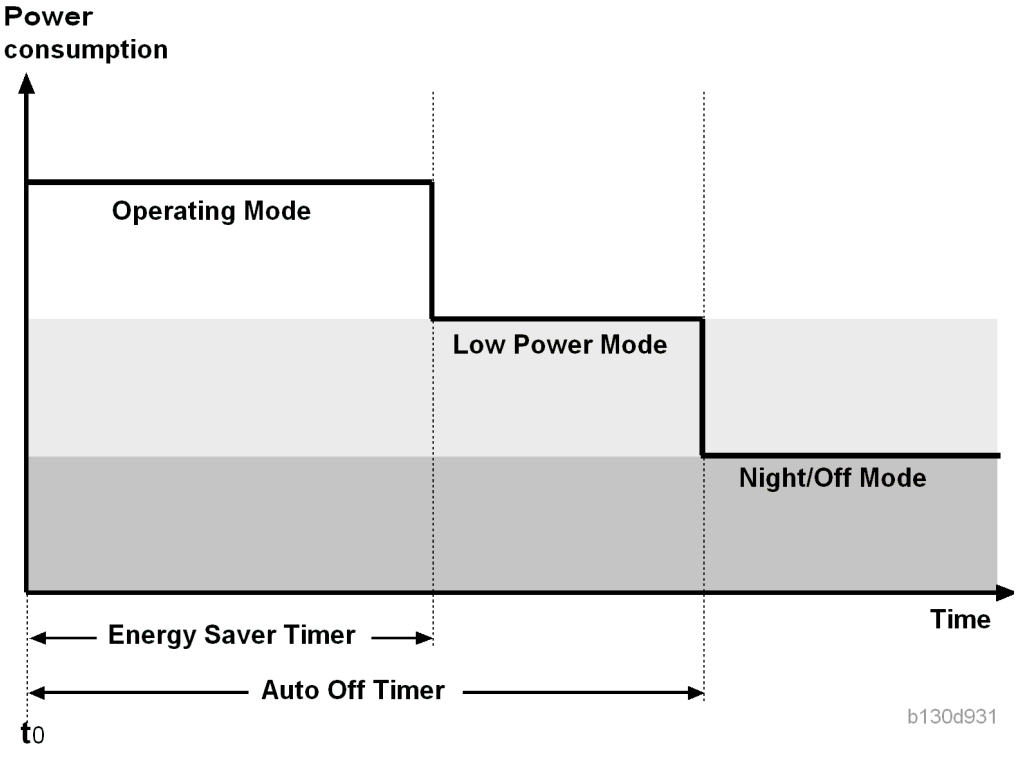

The machine has two energy-saver modes: the Low Power Mode and the Night/Off Mode. The table lists the status of several components.

	Operation panel	Engine	Exhaust fan
Operating Mode*	On	On	On
Low Power Mode	Off	On	Off
Night/Off Mode	Off	Off**	Off

* The "Operating Mode" here refers to all the modes (and status) other than the Low Power Mode and Night/Off Mode. Actual power consumption (during the Operating Mode) depends on job status and environmental conditions.

** The SRAM is alive and backs up the engine controller.

AOF

When AOF is off, the engine controller is unable to start the Night/Off Mode. The user should keep AOF on (→ System Settings → Key Operator Tools → AOF).

Timers

The engine controller references the Energy Saver Timer to start the Low Power Mode, and references the Auto Off Timer to start the Night/Off Mode. The user can set these timers (→ System Settings → Timer Settings).

The Energy Saver Timer and the Auto Off Timer start at the same time (t0) when the machine ends all jobs or when the user ends all manual operations. Note that the Auto Off Timer does not wait for the Energy Saver Timer. If the user specifies a larger value in the Energy Saver Timer, the Auto Off Timer expires earlier than the Energy Saver Timer. In a case like this, the Low Power Mode is not activated. Instead, the engine controller starts the Night/Off Mode when the Auto Off Timer expires.

Specified value	Low Power Mode	Night/Off Mode
Energy Saver Timer > Auto Off Timer	Cannot start	Can start
Energy Saver Timer = Auto Off Timer	Cannot start	Can start
Energy Saver Timer < Auto Off Timer	Can start	Can start

Recovery

Any of the following operations brings the machine back to the Operating Mode:

- The power switch is pressed.
- Originals are set on the document feeder.
- The platen cover is opened.

GDI Controller

The GDI controller is standard for the B280 and B293 models. For the B262 and B292 models, the GDI controller can be installed as an optional unit.

Overview

B280 (Without Network Interface Card)

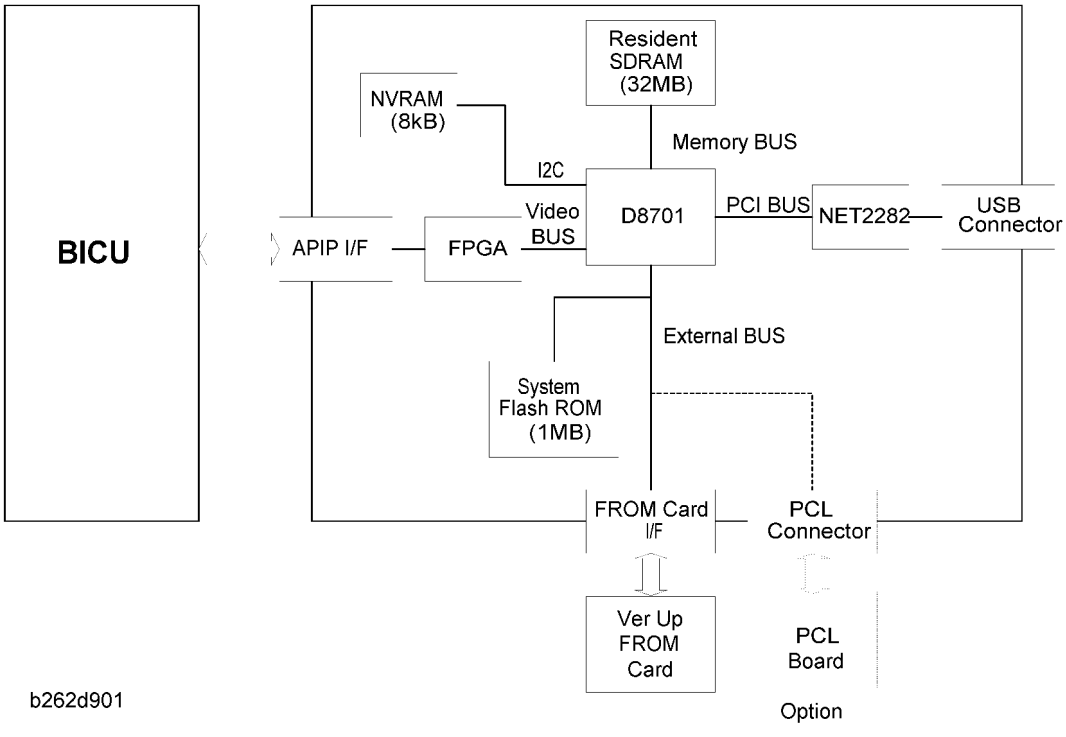

B293 (With Network Interface Card)

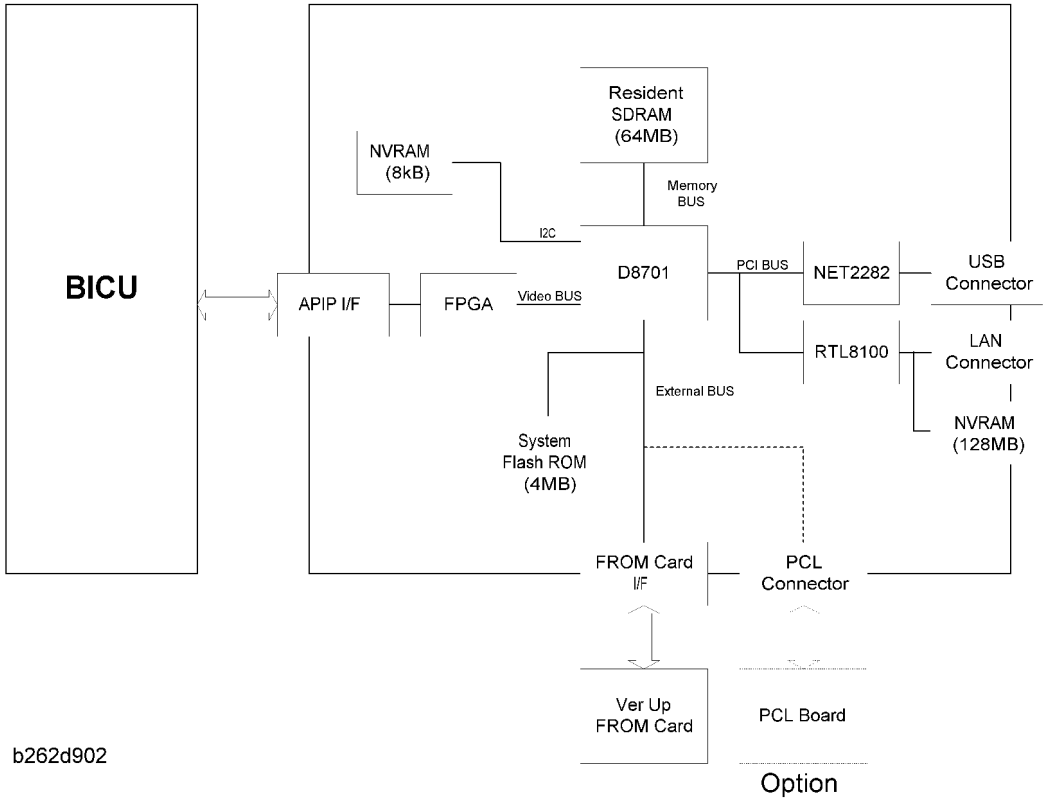

This machine uses the GDI controller to enable the printer features.

Main components:

CPU: D8701

Flash ROM: 1MB/4MB

SDRAM: 32MB/64MB 96MHz

NVRAM(8KB): Stores the controller setting

NVRAM(128MB):Store the MAC address

USB: NET2282

Optional components:

PCL Board

Controller Functions

Paper Source Selection

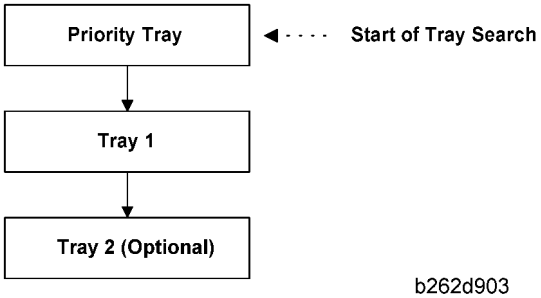

b262d903

Tray Priority (Auto Tray Select):

The Tray Priority setting determines the start of the tray search when the user selects "Auto Tray Select" with the driver.
The machine searches for a paper tray with the specified paper size and type.

When no tray contains paper that matches the paper size and type specified by the driver, the controller stops printing until the user loads the correct paper.

The Tray Priority setting can be specified using the Paper Size Setting in the user tools. (User Tools/ System Settings/ Paper Size Settings)

The by-pass tray is not part of the tray search.

Tray Lock:

If Tray Lock is enabled for a tray, the controller skips the "locked" tray in the tray search process.

The Tray Lock setting can be specified by selecting "No" for the "Apply Auto Paper Select" setting in the Paper Size Setting screen in the user tools. (User Tools/ System Settings/ Paper Size Settings)

The by-pass feeder cannot be locked.

Manual Tray Select:

If the selected tray does not have the paper size and type specified by the driver, the controller stops printing until the user loads the correct paper.

Auto Continue

When this function is enabled, the machine stops printing and cancels the print job if there is no paper tray which matches the paper size and paper type specified by the driver.

If Auto Continue is enabled, the machine waits for a specified period (0, 1, 5, 10, 15 minutes) for the correct size paper to be set in the tray, then cancels the print job if the interval expires.

- The interval can set with the Printer Settings in the user tools. (User Tools/ Printer Settings/ System/ Auto Continue)

If Auto Continue is disabled, the machine will not print the job, but will not cancel it, so the job stays in the print queue.

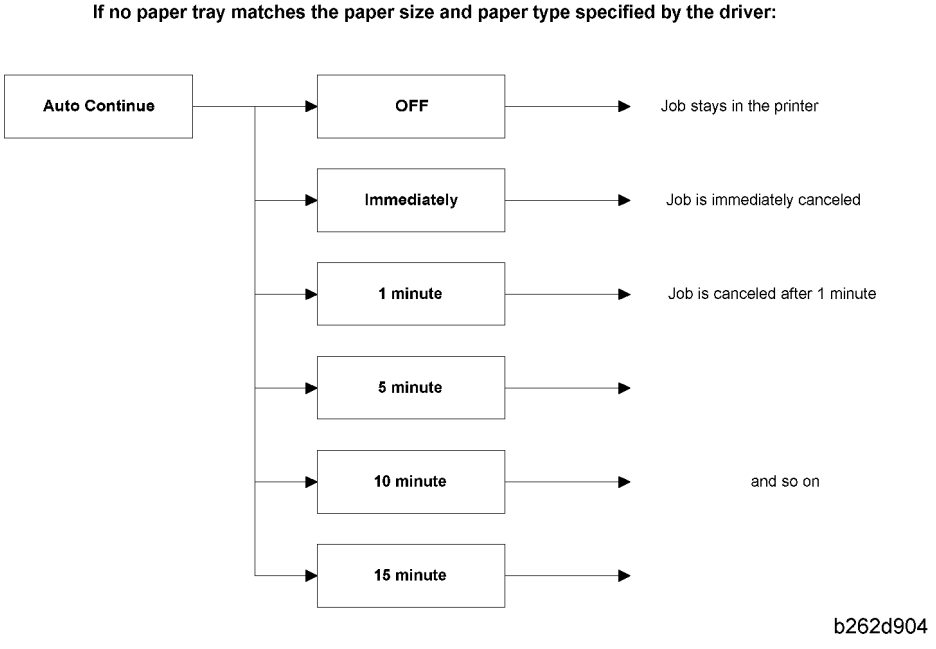

The default setting for Auto Continue is "Off."

Duplex Printing

Duplex printing is available with all output bin options but not all paper sizes. If a job specifies duplex printing but the paper size to be used cannot be used by the duplex unit, the job will be printed single-sided.

- When the by-pass feeder is selected as the paper source, duplex printing is automatically disabled.

Scanner Functions

Image processing for scanner mode

The image processing for scanner mode is done in the IPU chip on the BICU board. The IPU chip chooses the most suitable image processing methods (gamma tables, dither patterns, etc) depending on the settings made in the driver.

The image compression method can be selected with SP mode (MR/MH/MMR for binary picture processing).

Image Data Path:

1. **Image Store/Image Delivery Mode**

   The user can select the following modes from the LCD.

   - Delivery only

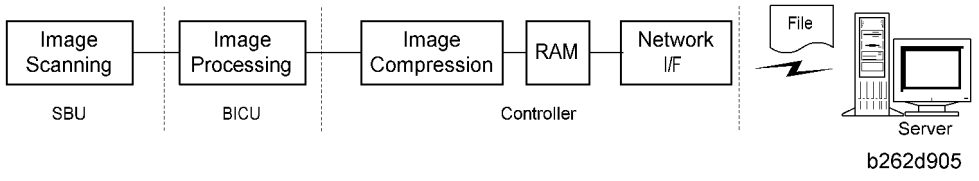

   After image processing and image compression, all image data for the job are stored in the printer controller RAM using TIFF file or PDF file format (binary picture processing). The type of TIFF or PDF format used depends on the user's scanner settings.

   When delivery mode is selected, the controller creates a file which contains the destination and page information, then the controller sends the file to a server.

2. **Twain Mode**

   After image processing and image compression, the data (TIFF or PDF) is sent to the scanner Twain driver directory on the computer.

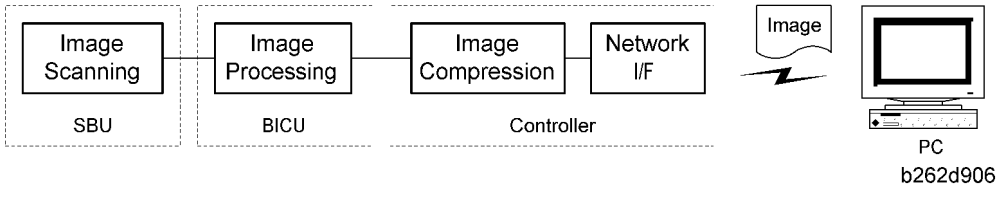

Network Interface

LED Indicators

The LED is on the optional controller box.

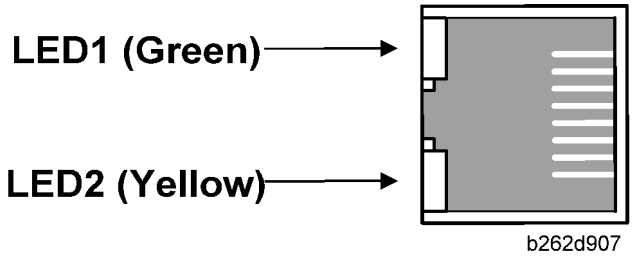

Description	On	Off
LED1 (Green): Link status	Link success	Link failure
LED2 (Yellow): Data rate	100 Mbps	10 Mbps

USB

Specifications

USB connectivity is provided as an option for this machine.

Interface:	USB 1.1, USB 2.0
Data rates:	480 Mbps (high speed), 12 Mbps (full speed)
	High speed mode is only supported by USB 2.0.

USB 1.1/2.0

USB (Universal Serial Bus) offers simple connectivity for computers, printers, keyboards, and other peripherals. In a USB environment, terminators, device IDs (like SCSI), and DIP switch settings are not necessary.

USB 1.1 provides the following features:

- Plug & Play. As soon as a new device is connected via USB, the operating system recognizes it, and the appropriate driver is installed for it automatically if the driver is available. If the driver is not available, a message prompts the user for the driver disk for immediate installation.
- Hot swapping (cables can be connected and disconnected while the computer and other devices are switched on)
- No terminator or device ID required
- Data rates of 12 Mbps (full speed)
- Common connectors for different devices

- Bi-directional data communication between device and host computer via a 4-byte header and DEVICE ID.

USB 2.0 is an evolution of the USB 1.1 specification. It uses the same cables, connectors, and software interfaces so the user will see no change. It provides an easy-to-use connection to a wide range of products with a maximum data rate of 480 Mbps (high speed).

Up to 127 devices can be connected and 6 cascade connections are allowed. Power is supplied from the computer and the maximum cable length is 5 m.

USB connectors

USB is a serial protocol and a physical link, which transmits all data on a single pair of wires. Another pair provides power to downstream peripherals. The USB standard specifies two types of connectors, type "A" connectors for upstream connection to the host system, and type "B" connectors for downstream connection to the USB device.

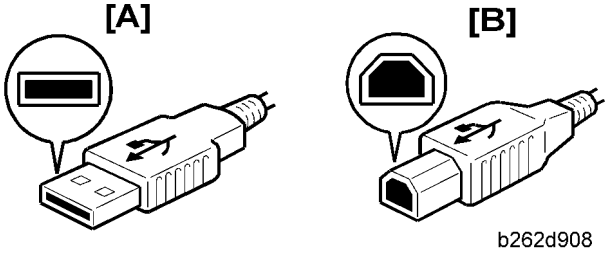

[A]: Type "A" connector, [B]: Type "B" connector

Pin Assignment

The controller has a type "B" receptacle.

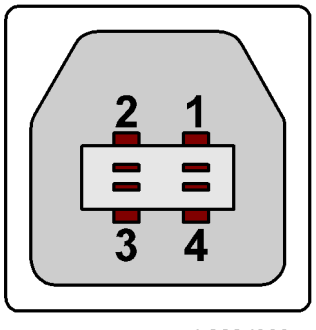

Pin No.	Signal Description	Wiring Assignment

1	Power	Red
2	Data –	White
3	Data +	Green
4	Power GND	White

Remarks about USB

The machine does not print reports specifically for USB.

Only one host computer is allowed for the USB connection.

After starting a job using USB, do not switch the printer off until the job has been completed. When a user cancels a print job, if data transmitted to the printer has not been printed at the time of cancellation, the job will continue to print up to the page where the print job was cancelled

When the controller board is replaced, the host computer will recognize the machine as a different device.

Related SP Mode

"USB Settings" in the printer engine service mode. Data rates can be adjusted to full speed fixed (12 Mbps). This switch may be used for troubleshooting if there is a data transfer error using the high speed mode (480 Mbps).

Data rates can also be adjusted using the UP mode "USB Setting" in the Host Interface in the System menu. This mode can be accessed only when the "Enter", "Escape", then "Menu" keys are pressed to enter the UP mode.

NVRAM on the GDI Controller

- Socket type
- When the GDI controller is replaced, remove the NVRAM from the old GDI controller and install it on the new GDI controller. NVRAM keeps machine-specific data (IP address and controller setting).

7. Specifications

General Specifications

Copier

Configuration:	Desktop		
Copy Process:	Laser beam scanning and electro photographic printing		
Originals:	Sheet/Book/Object		
Original Size:	Maximum A4 / $8^1/_2$" x 14" A4 / $8^1/_2$" x 14" (ARDF)		
Copy Paper Size:	Maximum A4 SEF / $8^1/_2$" x 11" SEF (Copier's paper tray) A4 SEF / $8^1/_2$" x 14" SEF (Bypass) A4 SEF / $8^1/_2$" x 14" SEF (Optional paper tray) A4 SEF / $8^1/_2$" x 14" SEF (Duplex) Minimum A5 LEF / $8^1/_2$" x 51/2" LEF (Copier's paper tray) A6 SEF/ $8^1/_2$" x 51/2" (Bypass) A4 SEF / $8^1/_2$" x 11″ SEF (Optional paper tray unit) A4 SEF / $8^1/_2$" x 11″ SEF (Duplex) Custom sizes in the bypass tray: Width: 90 – 216 mm (3.5" – 8.5") Length: 139 – 600mm (5.48" – 23.62")		
Copy Paper Weight:	Standard paper tray; optional paper tray: 60 – 90 g/m^2, 16 – 24 lb. Bypass: 60 – 157 g/m^2, 16 – 42 lb. Duplex: 64 – 90 g/m^2, 20 – 24 lb.		
Reproduction Ratios:		A4 Version	LT Version

	Enlargement	200% 141%	155% 129%
	Full Size	100%	100%
	Reduction	93% 71% 50%	93% 78% 65%
Zoom:	50% to 200%, in 1% steps		
Power Source:	110 – 120 V, 60 Hz or 220 – 240 V, 50/60 Hz		
Power Consumption:	Maximum: 900 W or less Energy Saver: 25 W or less Off Mode: 1 W or less		
Noise Emission:	Sound Power Level		
	Standby	40 dB(A) or less	
	Operating (copier only)	62 dB(A) or less	
	Operating (full-system)	66 dB(A) or less	
Dimensions (W x D x H)	Copier: 485 x 450 x 371 mm (19.4" x 18" x 14.8") With optional paper tray unit: 485 x 454 x 511 mm (18.4" x 17.7" x 20.1")		
Weight:	Basic: 22 kg (48.5 lb.) or less Basic with ARDF: 27 kg (59.4 lb.) or less GDI model: 24 kg (52.8 lb.) or less		
Resolution:	600 dpi		
Copying Speed in Multicopy Mode (copies/minute):	16 (A4 / $8\frac{1}{2}$" x 11"; 100%)		
Warm-up Time:	Basic: 10 seconds or less (at 20°C [68°F]) Other: Approximately 35 seconds (at 20°C [68°F])		
First Copy Time:	7.5 seconds or less **Note:** Measurement conditions • From the ready state, with the polygonal mirror motor spinning. • A4/LT copying		

	• From copier's paper tray • 100% size
Copy Number Input:	Numeric keypad, 1 to 99 (increment, decrement)
Manual Image Density:	5 steps
Auto Off Timer	Default: 1 minute Range: 1 to 240 minutes
Energy Saver Timer:	Default: 1 minute Rage: 1 to 240 minutes
Copy Paper Capacity:	Paper Tray: 250 sheets Optional Paper Tray Unit: 500 sheets x 1 Bypass Tray: 100 sheets
Copy-Tray Capacity	250 sheets
Toner Replenishment:	Cartridge replacement (230 g/cartridge)
Toner Yield	7k copies /toner bottle (A4, 6% full black)
Optional Equipment:	Auto reverse document feeder Paper tray unit Anti-condensation heater for paper tray unit

Printer

Resolution	600 dpi
Printing speed	16 ppm (A4L, 8½" × 11"L plain paper)
Interface	USB 2.0 interface, Ethernet interface (100BASE-TX/10BASE-T)
Network protocol	TCP/IP, IPP
Printer language	Host-Based Printing
Memory	64 MB
Operating systems supported by this machine	Windows 98SE / Me Windows 2000

	Windows XP Windows Server 2003
Required network cable	100BASE-TX/10BASE-T shielded twisted-pair (STP, Category/Type5) cable.

Scanner

Scan method	Flatbed scanning
Scan speed *1	Approx. 18 pages/minute [Scan size: A4SEF, Colors/Gradations: Binary, Resolution: 200dpi, Select device data compression (Binary/Halftone): Data compression (MMR), Document feeder: ARDF, ITU-T No.1 Chart]
Maximum power consumption	Less than 900 W
Image sensor type	CCD Image Sensor
Scan types	Sheet, book
Interface	USB interface, Ethernet interface (10BASE-T or 100BASE-TX)
Resolution	B/W: 600 dpi Full color: 300 dpi (600 dpi with the optional DIMM)
Variable range of scan resolution	Setting range: 100 dpi - 600 dpi

*1 Scanning speeds vary according to machine operating conditions, computer (specifications, network traffic, software, etc.), and original types.

ARDF

Original Size:	Standard: A4 to A5; $8\frac{1}{2}$" x 14" to $8\frac{1}{2}$" x $5\frac{1}{2}$"

	Custom (Simplex): Width: 139 mm to 216 mm Length: 139 mm to 1260 mm Custom (Duplex): Width: 139 mm to 216 mm Length: 160 mm to 356*1 mm *1: When you use 310 mm or more originals, originals weighing 55k (17 lb./ 64 g/m^2) or less cannot be used in duplex scanning mode.
Original Weight:	52–105 g/m^2 (14–28 lb.)
Table Capacity:	50 sheets (80 g/m^2, 21 lb.)
Original Standard Position:	Center
Separation:	FRR
Transport:	Roller transport
Feed Order:	Top first
Reproduction Range:	50–200%
Power Source:	24 and 5 Vdc from the copier
Power Consumption:	Operating: 50 W or less On standby: 1.2 W or less
Dimensions (W x D x H):	485 x 360 x 120 mm (19.1" x 14.2" x 4.72")
Weight:	4.9 kg (10.8 lb) (excluding the original table and platen cover)

Paper Tray Unit

Paper Sizes:	A4 SEF, 8½" x 11" SEF, 8½" x 13" SEF, 8½" x 14" SEF
Paper Weight:	60 – 90 g/m^2, 16 – 24 lb.
Tray Capacity:	500 sheets (80 g/m^2, 21 lb.) x 1 tray
Paper Feed System:	Feed roller and friction pad

Power Source:	24 Vdc and 5 Vdc, from copier. If optional tray heater is installed, the copier also supplies Vac (120 Vac or 220 – 240 Vac).
Power Consumption:	Maximum: 15 W (excluding optional tray heater)
Average:	14 W (excluding optional tray heater)
Weight:	Not above 6 kg (13.2. lb.)
Size (W x D x H):	430 x 414 x 140 mm (16.9" x 16.3" x 5.5")

Supported Paper Sizes

Original Paper Sizes

The copier and ARDF do not detect original paper sizes. The following table lists the paper sizes that the ARDF can transport.

Paper	Size (W x L)	Book	ARDF	
			Simpl.	Dupl.
A3 SEF	297 x 420 mm	–	–	–
B4 SEF	257 x 364 mm	–	–	–
A4 SEF	210 x 297 mm	X	X	X
A4 LEF	297 x 210 mm	–		
B5 SEF	182 x 257 mm	X	X	X
B5 LEF	257 x 182 mm	–		
A5 SEF	148 x 210 mm	X	X	X
A5 LEF	210 x 148 mm	X	X	
B6 SEF	128 x 182 mm	–		
B6 LEF	182 x 128 mm	–		
A6 SEF	105 x 148 mm	–		
8K SEF	267 x 390 mm	–		
16K SEF	195 x 267 mm	X	X	X
16K LEF	267 x 195 mm	–		
DLT SEF	11.0" x 17.0"	–		
LG SEF	8.5" x 14.0"	X*1	X	X*2
LT SEF	8.5" x 11.0"	X	X	X
LT LEF	11.0" x 8.5"	–		
Executive SEF	7.25" x 10.5"	–	X	X

Paper	Size (W x L)	Book	ARDF	
			Simpl.	Dupl.
HLT SEF	5.5" x 8.5"	X	X	X
HLT LEF	8.5" x 5.5"	X	X	
F/GL (F4) SEF	8.0" x 13.0"	X*1	X	X*2
Foolscap SEF	8.5" x 13.0"	X*1	X	X*2
Folio SEF	8.25" x 13.0"	X*1	X	X*2
Government	8.25" x 14"	X*1	X	X*2
USB4 SEF	10.0" x 14.0"	–		
Eng Quarto SEF	8.0" x 10.0"	–	X	X*2
Eng Quarto LEF	10.0" x 8.0"	–		
Custom:	Width 139-216 mm Length 139-356 mm	–	X*3	X*2, 4

Symbol meanings:

X: Can use

–: Cannot use

*1: Can be used when the ARDF is installed

*2: 55k (17 lb./ 64 g/m^2) or less original cannot be used.

*3: Width: 139-216 mm, Length: 139-1260 mm

*4: Width 139-216 mm, Length: 160-356 mm

Paper Feed

The copier and optional paper feed unit do not detect paper sizes. The following table lists the paper sizes that the copier and optional paper feed unit can transport.

Paper	Size (W x L)	Regular	By-pass	Duplex	Optional PFU
A3 SEF	297 x 420 mm	–	–	–	–
B4 SEF	257 x 364 mm	–	–	–	–

Paper	Size (W x L)	Regular	By-pass	Duplex	Optional PFU
A4 SEF	210 x 297 mm	X	X	X	X
A4 LEF	297 x 210 mm	–	–	–	–
B5 SEF	182 x 257 mm	X	X	X	–
B5 LEF	257 x 182 mm	–	–	–	–
A5 SEF	148 x 210 mm	–	X	–	–
A5 LEF	210 x 148 mm	X	X	–	–
B6 SEF	128 x 182 mm	–	–	–	–
B6 LEF	182 x 128 mm	–	–	–	–
A6 SEF	105 x 148 mm	–	–	–	–
8K SEF	267 x 390 mm	–	–	–	–
16K SEF	195 x 267 mm	X	X	X	–
16K LEF	267 x 195 mm	–	–	–	–
DLT SEF	11.0" x 17.0"	–	–	–	–
LG SEF	8.5" x 14.0"	–	X	X	X
LT SEF	8.5" x 11.0"	X	X	X	X
LT LEF	11.0" x 8.5"	–	–	–	–
Executive SEF	7.25" x 10.5"	–	X	–	–
HLT SEF	5.5" x 8.5"	–	X	–	–
HLT LEF	8.5" x 5.5"	X	X	–	–
F/GL (F4) SEF	8.0" x 13.0"	–	X	–	–
Foolscap SEF	8.5" x 13.0"	–	X	X	X
Folio SEF	8.25" x 13.0"	–	X	X	X
Government	8.25" x 14"	–	X	X	X
USB4 SEF	10.0" x 14.0"	–	–	–	–
Eng Quarto SEF	8.0" x 10.0"	–	–	–	–

Paper	Size (W x L)	Regular	By-pass	Duplex	Optional PFU
Eng Quarto LEF	10.0" x 8.0"	–	–	–	–
Custom: Leading edge 90–216 mm Side edge 139–356 mm		–	X	–	–

Symbol meanings:

X: Can transport

–: Cannot transport

Machine Configuration

Basic Model (B262/B292)

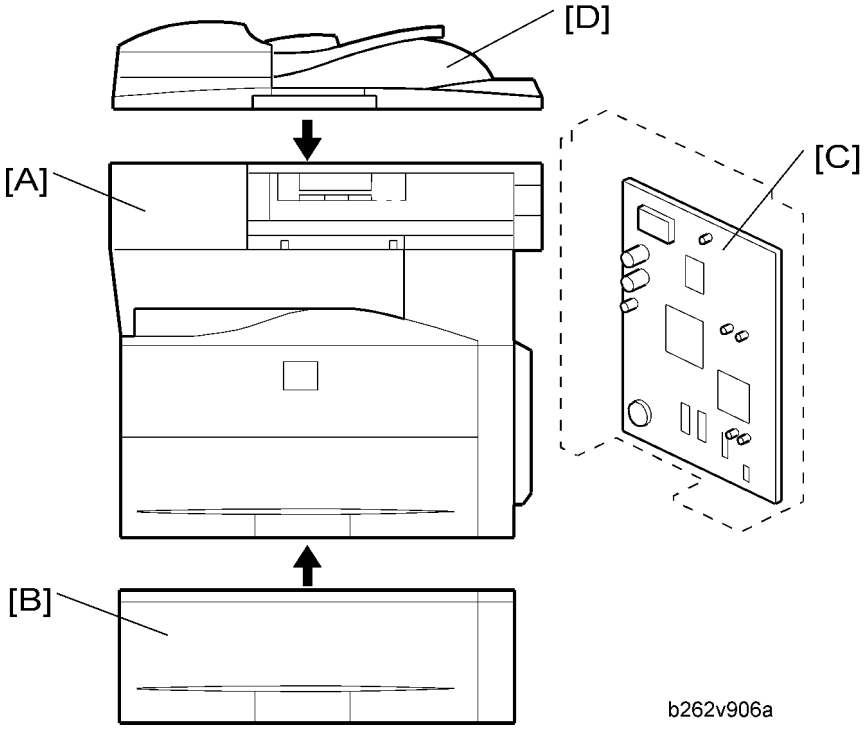

	Standard Component	Machine Code	Remarks
1	Copier [A]	B262/B292	-

	Optional Components	Machine Code	Remarks
2	500-Sheet Paper Feed Unit [B]	B421	-
3	DDST Unit [C]	B880/B893	-

	Standard/Optional Component	Machine Code	Remarks
4	ARDF [D]	B872	• Standard for B292 • Optional for others

GDI Model (B280/B293)

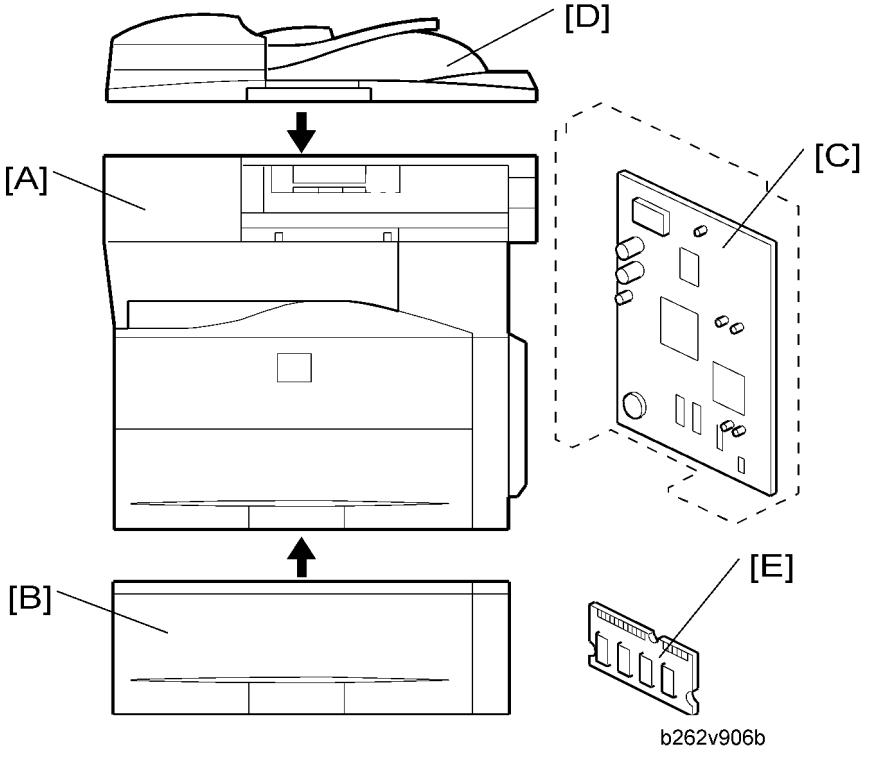

	Standard Component	Machine Code	Remarks
1	Copier [A]	B280/B293	-
	- DDST Unit [C]	-	Standard for B280/B293

	Optional Components	Machine Code	Remarks
2	500-Sheet Paper Feed Unit [B]	B421	
3	ARDF [D]	B872	-
4	256MB/SDRAM/DIMM (PC133) [E]	G332	-

MEMO

MEMO